TABLE OF CONTENTS

Outboard 5

Air Filters 94
Anode Application Charts 106
Anodes - Mariner Cyl. Block & Exh. Tube 106
Anodes - Mercury Thruster 105
Anodes - Outboard Kits 99
Anodes - Prop Nut/Spool 105
Anodes - Side Mounted/Pocket 104
Anodes - Transom Bracket/Power Trim 103
Anodes - Trim Tab/Plate 100
Battery Cable Kit 37
Battery Charging Kit 24
Battery Charging Kits Chart - Mercury/ Mariner 26
Blow Start Siphon 78
Carburetor Anti-Icing Kits 89
Co-Pilot Kit 55
Cowl Mounted Button 39
Deck Oil Fill Kit 92
Driveshaft Extension Chart 60
Electric Start Kit 37
Electric Start Kits Chart - Mercury/Mariner 40
Extension Kit - 2 1/2 Inch (64mm) 59
Extension Kit - 5 Inch (127mm) 58
Flushing Attachments 67
Front Low Water Pick-up Plug Kit 93
Fuel Filters 79
Fuel Line Fittings and Components 74
Fuel Lines and Primer Bulbs - (US-EPA Compliant) 72
Fuel Tanks - US-EPA 2011 Compliant 70
Gear Housing Replacement Skegs 93
Harness Assembly 25
Heavy Abrasion Water Pump Kit 20
High Altitude Gear Sets & Gearcases (4 cylinder) 66
High Altitude Gear Sets & Gearcases (V-6) 66
High Energy Alternator Kits 20
High Energy Ignition Kit 20
High Speed Water Pickup Inserts 70
Kicker Strap Kit 99
Lifting Devices - Outboard 98
Lighting Coil Kits 21
Lighting Coil Kits Chart - Mercury/Mariner 22
Lighting Regulators 21
Manual Choke Kit 86
Mercathode 98
Neutral Interlock 40
Oil Filters - FourStroke Outboard 95
Outboard Mounting Hardware 65
Outboard Rigging Hose Kit 56
Power Trim & Tilt Kits Chart - Force 34
Power Trim Chart - Mercury/Mariner 2-Cycle . . . 32
Power Trim Chart - Mercury/Mariner FourStroke 30
Power Trim Kit 28
Power Trim Switch Kit 30
Remote Control Engine Harness 39
Remote Fuel Tank Adapter Kits 85
Remote Mounted Power Trim Accessories 30
Remote Oil Tank Conversion Kits 90
Remote Oil Tanks and Components 90
Rigging Hoses Chart - Mercury/Mariner 57
Shallow Water Drive Kit 57
Shift Attaching Kit 47
Sideshift Conversion Kit 57
Spark Plug Application Chart - 2-Cycle 13
Spark Plug Application Chart - Early Mariner . . . 18
Spark Plug Application Chart - FourStroke 11
Spark Plugs - Standard 5
Spark Plugs - Suppressor (Resistor) 7
Steering Bracket without Carrying Handle 56
Thermostat Kit 86
Thermostats Chart - Mercury/Mariner 87
Tiller Handle - Big Tiller Steering 48
Tiller Handle Bracket 55
Tiller Handle Harness Button 38
Tiller Handle Kits Chart - Mercury/Mariner 50
Tiller Handle Kit - Traditional Style 42
Tilt Locks Chart - Mercury/Mariner/Force 36

TABLE OF CONTENTS - ENGINE ACCESSORIES

Trailering Clip 36
Trailering Clips Chart - Mercury/Mariner/ Force 36
Trailering Tilt Support Brackets 35
Transom Mounted Ignition Keyswitch 39
Trim Limit Kits 35
Vertical Manual Starter Rope Guide 89
Voltage Regulator/Rectifier Kit 20
Voltage Regulator Kit 20
Water Eliminator 78
Water Separating Fuel Filter - Racor 85
Water Separating Fuel Filters and Kits 81

MerCruiser 120

Air Intake Silencer Kit 129
Air Intake Tube Kit 129
Anode Chart - MerCruiser 195
Anode Chart - Propeller Nut 191
Anode Charts - Accessories and Inboard 197
Anode - Engine 194
Anode - Heat Exchanger 194
Anodes - Driveshaft Housing 189
Anodes - Gear Housing 191
Anodes Kits 187
Anodes - Propeller 190
Anodes - Transom 189
Anodes - Trim Cylinder 193
Bearing Kit 125
Boost Pump Kit 178
Carburetor Wedge Kit 157
Check Valve Kit 184
Closed Cooling Kit Chart (Dry Joint Exhaust) . 162
Closed Cooling Kit Chart - MCM (Pre-Dry Joint Exh) 165
Closed Cooling Kit Chart - MIE (Pre-Dry Joint Exh) 167
Closed Cooling Kit Chart - Ski (Pre-Dry Joint Exh) 168
Closed Cooling Kits 157
Cool Fuel Relocation Kits 157
Custom Engine Covers 125
Driveshaft Extension (Jackshaft) Kit Chart 172
Driveshaft Extension (Jackshaft) Kits 170
Dual Station Senders 127
Engine Circulating Pump Drain Kit 168
Engine Flush Connector Kit 169
Engine Flush Kit 169
Exhaust Block-Off Plate 133
Exhaust Elbow/Riser Kits (8.1L & 8.2L, non-EC, 2001 & newer) 144
Exhaust Elbow Riser Kits (8.1L) Emissions Control 151
Exhaust Elbow Riser Kits (8.2L) Emissions Control 153
Exhaust Manifold Fittings 156
Exhaust Outlet Flapper Kits 133
Exhaust Pipe Kits 133
Exhaust Riser Chart - Gas, Emissions Control Engines 155
Exhaust Riser Chart - Gasoline Engine (Non-EC engines) 145
Exhaust Riser Kits (Gas, Dry Joint, Small Block, non-EC, 2002 & newer) 138
Exhaust Riser Kits (Gas, Small Block, Emissions Control) 149
Exhaust Riser Kits (Gas, Wet Joint, 2002 & older) 137
Exhaust Riser Kits For Diesel Engines 136
Flushing Attachments 170
Fuel Filter Kit 178
Galvanic Isolator Kit 186
Gear Housing Replacement Skegs 185
Gear Lube Monitor Kits 126
High Capacity Water Separating Fuel Filter - Gasoline or Diesel 178
Hot Water Heater Fitting Kits 129
Hot Water Heater T-Fitting Kit Chart 131
Mercathode 186
Oil Drain Hose Kit Chart 177
Oil Drain Hose Kits 176
Optional Front Engine Mount 184
Propeller Shaft Couplers for MIE only 185
Racor Water Separating Fuel Filters -Diesel 183

Racor Water Separating Fuel Filters -Gasoline . . . 183
Remote Oil Filter Bracket Kit . . . 175
Remote Oil Filter Bracket Kit Chart . . . 175
Remote Oil Filter Kit Chart . . . 174
Remote Oil Filter Kits . . . 173
Remote Oil Hose Extension Kit Chart . . . 176
Remote Oil Hose Extension Kits . . . 175
Seawater Hose Drain Kit . . . 168
Seawater Pickups . . . 183
Seawater Strainer . . . 184
Serpentine Belt Kit Chart . . . 128
Serpentine Belt Kits . . . 127
Silent Choice Exhaust System . . . 136
Spark Plug Chart - MerCruiser . . . 120
Spark Plugs - MerCruiser . . . 120
Tailstock Kits . . . 173
Thru Transom Exhaust Outlets . . . 132
Tilt Up Limit Spacer Kit . . . 125
Trailering Clips . . . 126
Transom Adapter Kit . . . 186
Trim In Limit Spacer Kits . . . 126
Water Eliminator . . . 178
Water Pressure Relief Valve Kit . . . 184
Water Separating Fuel Filters -Diesel . . . 181
Water Separating Fuel Filters -Gasoline . . . 179

Racing . . . 198

2.5L Drag Powerheads . . . 201
Air Intake Spacer Kit . . . 202
Aluminum Flywheel for V-6 Outboards . . . 200
Bearing Upgrade Kits . . . 216
Bravo HD Propshaft Kit . . . 217
Bravo HP Transom Assembly . . . 206
Bravo XR Drive Charts . . . 206
Champ/S3000 . . . 201
Cowls . . . 198
Cylinder Heads for 2.5 EFI Drag . . . 200
Cylinder Heads for V-6 Outboard . . . 199
Driveshaft Assembly . . . 217
Driveshaft Housing Assembly -12 Inch . . . 202
Electrical Components . . . 202
Electric Fuel Pumps . . . 202
Engine Harness Rigging Kits-Non DTS . . . 208
Flushing Kits . . . 204
Fuel Filter . . . 210
Gearcase Charts - Outboard 2.5L Model . . . 204
Heavy Duty Battery Cables for V-6 Outboards . . . 200
M8 Drive Chart . . . 213
M8 Drives . . . 212
MerCathode . . . 210
MIscellaneous . . . 210
M Series Transom Plate Assemblies . . . 212
NXT1 / Six SSM Drive Chart . . . 213
NXT1 Drive Chart . . . 213
NXT1 Driveline Kit . . . 213
NXT1 Steering Indicator . . . 213
NXT1 Water Pickup Kits . . . 214
Oil Temperature Gauge . . . 198
Outboard Gearcase Canister Kit . . . 204
Outboard Gear Set for 2.5L Models . . . 205
Outboard HD Propshaft Kits . . . 199
Outboard Top Cowl Graphics Chart . . . 198
Plastic Reed Valves . . . 201
Power Steering . . . 214
QC4v Engines . . . 214
Race DTS Accessories . . . 215
Rigging Accessories . . . 203
Spacer Kits . . . 205
Stage 2 Muffler Kit . . . 211
Stator . . . 200
Sterndrive Accessories . . . 207
Trim Hoses . . . 203
Trim Pumps . . . 203
Water Pressure Relief Valve Kit . . . 205
X-Haust Accessories . . . 211
X-Haust Noise Reducer . . . 210
X-Haust Stage 1 Tailpipe Kits . . . 210
X-Haust Tailpipe Hardware Kits . . . 211

Jet Drive . . . 218

Anode Chart - Sport Jet . . . 225
Anodes - Sport Jet . . . 224

Flushing Kits 222
Ignition Key Switch with Harnesses 222
Jet Drive 135 & 270 Deg. Steering System 220
Jet Drive Remote Controls 218
Jet Drive Shift Cables 218
Jet Drive Throttle Cables 220
Mufflers 224
Pump Mounting Grommet Chart 223
Pump Mounting Grommets 223
Replacement Inlet Grates 223
Steering Cable Bulkhead Fittings and Bellows Kits 221
Steering Cable Rod End 221
Tunnel Sample 224

Point-of-Sale Product Displays and Logos . . 226

Logos 227
Point-of-Sale Product Easels 226
Point-of-Sale Product Kits 226

OUTBOARD

SPARK PLUGS - STANDARD

All spark plugs carried are not contained in this section. Spark plugs shown here are the Mercury/Mariner Outboard Service recommended replacements at time of printing. View the application charts following this section for specific outboard model recommendations.

SPARK PLUG



33- 12127

NGK, BP6HS-10, check and set gap per owner's manual or the emmission control information decal if present.

Priced individually, sold @ multiples of 10

SPARK PLUG



33- 13686Q

NGK, BU8H, check and set gap per owner's manual or the emissions control information decal if present.

Priced individually, sold @ multiples of 10

SPARK PLUG



33- 19424

NGK, BP8HS-15, check and set gap per owner's manual or the emissions control information decal if present.

Priced individually, sold @ multiples of 10

SPARK PLUG



33- 41263M

NGK, B7HS-10, check and set gap per owner's manual or the emissions control information decal if present.

Priced individually, sold @ multiples of 10

SPARK PLUG



33- 82370M 1

NGK, B6HS, check and set gap per owner's manual or the emissions control information decal if present.

Priced individually, sold @ multiples of 4

SPARK PLUG



33- 82371M

NGK, B7HS, check and set gap per owner's manual or the emissions control information decal if present.

Priced individually, sold @ multiples of 10

OUTBOARD

SPARK PLUG



33- 82372M

NGK, B8HS, check and set gap per owner's manual or the emissions control information decal if present.

Priced individually, sold @ multiples of 10

SPARK PLUG



33- 84675M

NGK, B5HS, check and set gap per owner's manual or the emissions control information decal if present.

Priced individually, sold @ multiples of 10

SPARK PLUG



33- 97180Q

NGK, BUHW, check and set gap per owner's manual or the emissions control information decal if present.

Priced individually, sold @ multiples of 10

33- 97182Q

NGK, BUHW-2, check and set gap per owner's manual or the emissions control information decal if present.

Priced individually, sold @ multiples of 10

SPARK PLUG



33- 97184

NGK, BP7HS-10, check and set gap per owner's manual or the emissions control information decal if present.

Priced individually, sold @ multiples of 10

SPARK PLUG



33- 97186

NGK, B9HS-10, check and set gap per owner's manual or the emissions control information decal if present.

Priced individually, sold @ multiples of 10

SPARK PLUG



33-813412

NGK, B7FS, check and set gap per owner's manual or the emissions control information decal if present.

Priced individually, sold @ multiples of 10

SPARK PLUG

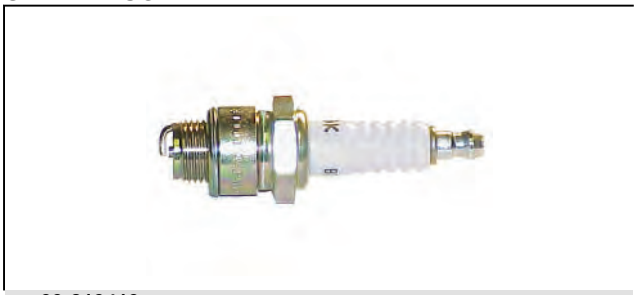

33-813413

NGK, B7S, check and set gap per owner's manual or the emissions control information decal if present.

Priced individually, sold @ multiples of 10

SPARK PLUG



33-813469

NGK, B6S, check and set gap per owner's manual or the emissions control information decal if present.

Priced individually, sold @ multiples of 10

SPARK PLUG



33-816737Q

NGK, BP8HN-10, check and set gap per owner's manual or the emissions control information decal if present.

Priced individually, sold @ multiples of 10

SPARK PLUG



33-896323

Champion, L82C, check and set gap per owner's manual or the emissions control information decal if present.

Priced individually, sold @ multiples of 4

SPARK PLUGS - SUPPRESSOR (RESISTOR)

All spark plugs carried are not contained in this section. Spark plugs shown here are the Mercury/Mariner Outboard Service recommended replacements at time of printing. View the application charts following this section for specific outboard model recommendations.

SPARK PLUG



33- 941

Champion, QL77CC, check and set gap per owner's manual or the emissions control information decal if present.

Priced individually, sold @ multiples of 6

SPARK PLUG



33- 14103550

NGK, BUZHW, check and set gap per owner's manual or the emissions control information decal if present.

Priced individually, sold @ multiples of 10

33- 14103568

NGK, BUZ8H, check and set gap per owner's manual or the emissions control information decal if present.

Priced individually, sold @ multiples of 10

33- 14103Q

NGK, BUZHW-2, check and set gap per owner's manual or the emissions control information decal if present.

SPARK PLUG



33- 14814Q

NGK, BPZ8HS-10, check and set gap per owner's manual or the emissions control information decal if present.

Priced individually, sold @ multiples of 10

OUTBOARD

SPARK PLUG



33- 14814568

NGK, BPZ8HS-15, check and set gap per owner's manual or the emissions control information decal if present.

Priced individually, sold @ multiples of 10

SPARK PLUG



33- 17719547

NGK, BPR7HS-10, check and set gap per owner's manual or the emissions control information decal if present.

Priced individually, sold @ multiples of 10

33- 19796

NGK, BPR6HS-10, check and set gap per owner's manual or the emissions control information decal if present.

Priced individually, sold @ multiples of 10

SPARK PLUG



33-803507

NGK, DCPR6E, check and set gap per owner's manual or the emissions control information decal if present.

Priced individually, sold @ multiples of 10

SPARK PLUG



33-813418

NGK, BR9HS-10, check and set gap per owner's manual or the emissions control information decal if present.

Priced individually, sold @ multiples of 10

SPARK PLUG



33-813472

NGK, BR6HS, check and set gap per owner's manual or the emissions control information decal if present.

Priced individually, sold @ multiples of 10

SPARK PLUG



33-816837Q

NGK, BPZ8HN-10, check and set gap per owner's manual or the emissions control information decal if present.

Priced individually, sold @ multiples of 10

SPARK PLUG



33-824406 8

NGK, BR8HS-10, check and set gap per owner's manual or the emissions control information decal if present.

Priced individually, sold @ multiples of 10

SPARK PLUG



33-827858Q

NGK, DPR6EA-9, check and set gap per owner's manual or the emissions control information decal if present.

Priced individually, sold @ multiples of 10

SPARK PLUG



33-827859

NGK, CR6HS, check and set gap per owner's manual or the emissions control information decal if present.

Priced individually, sold @ multiples of 10

SPARK PLUG



33-828942

NGK, BR7HS-10, check and set gap per owner's manual or the emissions control information decal if present.

Priced individually, sold @ multiples of 10

SPARK PLUG



33-843220Q

NGK, LZFR6J, check and set gap per owner's manual or the emissions control information decal if present.

Priced individually, sold @ multiples of 4

SPARK PLUG - SHOP PACK



33-8M0058936

NGK IZFR6J, check and set gap per owner's manual or the emissions control information decal if present.

25 spark plugs in one shop package.

Priced individually, sold @ multiples of 25

SPARK PLUG



33-8M0057936

NGK, ZFR5F, check and set gap per owner's manual or the emissions control information decal if present.

Priced individually, sold @ multiples of 4

SPARK PLUG



859495Q

Champion - LFR5A-11, check and set gap per owner's manual or the emissions control information decal if present.

Priced individually, sold @ multiples of 10

SPARK PLUG



33-881284Q

NGK, LFR6A-11, check and set gap per owner's manual or the emissions control information decal if present.

Priced individually, sold @ multiples of 10

SPARK PLUG



33-883323001

Champion, RA8HC, check and set gap per owner's manual or the emissions control information decal if present.

Priced individually, sold @ multiples of 4

SPARK PLUG



33-889246Q39

NGK, ILFR6GE, check and set gap per owner's manual or the emissions control information decal if present.

Priced individually, sold @ multiples of 4

SPARK PLUG - SHOP PACK



33-8M0058934

NGK ILFR6GE, check and set gap per owner's manual or the emissions control information decal if present.

25 spark plugs in one shop package.

Priced individually, sold @ multiples of 25

SPARK PLUG



33-889597Q

NGK, IZFR5G, check and set gap per owner's manual or the emissions control information decal if present.

Priced individually, sold @ multiples of 4

SPARK PLUG - SHOP PACK



33-8M0058933

NGK IZFR5G, check and set gap per owner's manual or the emissions control information decal if present.

25 spark plugs in one shop package.

Priced individually, sold @ multiples of 25

SPARK PLUG



33-892567Q

NGK IZFR5J, check and set gap per owner's manual or the emissions control information decal if present.

Priced individually, sold @ multiples of 4

SPARK PLUG - SHOP PACK



33-8M0058935

NGK IZFR5J, check and set gap per owner's manual or the emissions control information decal if present.

25 spark plugs in one shop package.

Priced individually, sold @ multiples of 25

SPARK PLUG



33-896329874

Champion, RL82C, check and set gap per owner's manual or the emissions control information decal if present.

Priced individually, sold @ multiples of 4

SPARK PLUG



33-898829001

NGK, LFR4A-E, check and set gap per owner's manual or the emissions control information decal if present.

Priced individually, sold @ multiples of 10

SPARK PLUG



33-889246Q39

NGK, ILFR6GE, check and set gap per owner's manual or the emissions control information decal if present.

Priced individually, sold @ multiples of 4

SPARK PLUG APPLICATION CHART - FOURSTROKE

Spark Plug Application Chart - FourStroke Outboard

Model		Serial # Range	Standard Spark Plug Mercury Part Number	Standard Spark Plug Manufacturer's No.	Suppressor(resistor) Spark Plug Mercury No.	Suppressor(resistor) Spark Plug Manufacturer's No.	Gap
2.5 FourStroke	JPN	0R131842 and up	N/A	N/A	33-803507	NGK DCPR6E	.033
3.5 FourStroke	JPN	0R131842 and up	N/A	N/A	33-803507	NGK DCPR6E	.033
4 FourStroke	JPN	0R000001 and up	N/A	N/A	33-803507	NGK DCPR6E	.035
4 FourStroke	BEL	0P073456 and up	N/A	N/A	33-803507	NGK DCPR6E	.035
5 FourStroke	JPN	0R000001 and up	N/A	N/A	33-803507	NGK DCPR6E	.035
5 FourStroke	BEL	0P073456 and up	N/A	N/A	33-803507	NGK DCPR6E	.035
6 FourStroke	JPN	0R000001 and up	N/A	N/A	33-803507	NGK DCPR6E	.035
6 FourStroke	BEL	0P073456 and up	N/A	N/A	33-803507	NGK DCPR6E	.035
8 FourStroke Bodensee	USA	0H000058 - 0H017349	N/A	N/A	33-827859	NGK CR6HS	.026
8 FourStroke Bodensee	USA	0G760300 - 0T178499	N/A	N/A	33-827859	NGK CR6HS	.026
8 FourStroke Bodensee	BEL	0P086824 - 0P325499	N/A	N/A	33-827858Q	NGK DPR 6EA-9	.035
8 FourStroke	JPN	0R042475 and up	N/A	N/A	33-803507	NGK DCPR6E	.033
8 FourStroke	BEL	0P325500 and up	N/A	N/A	33-803507	NGK DCPR6E	.033
9.9 FourStroke	USA	0H000058 - 0H016909	N/A	N/A	33-827859	NGK CR6HS	.026
9.9 FourStroke	USA	0G760300 - 0T979999	N/A	N/A	33-827858Q	NGK DPR 6EA-9	.035
9.9 FourStroke	BEL	0P075166 - 0P325499	N/A	N/A	33-827858Q	NGK DPR 6EA-9	.035
9.9 FourStroke	JPN	0R042475 and up	N/A	N/A	33-803507	NGK DCPR6E	.033
9.9 FourStroke	BEL	0P325500 and up	N/A	N/A	33-803507	NGK DCPR6E	.033
15 FourStroke, 323cc	USA	0G590000 - 1B727495	N/A	N/A	33-827858Q	NGK DPR 6EA-9	.035
15 FourStroke, 323cc	BEL	9973100 and up	N/A	N/A	33-827858Q	NGK DPR 6EA-9	.035
15 FourStroke, 351cc	JPN	0R235949 and up	N/A	N/A	33-803507	NGK DCPR6E	.033
20 FourStroke (Carb)	JPN	0R235168 and up	N/A	N/A	33-803507	NGK DCPR6E	.033
25 FourStroke (Carb)	USA	0G590000 - 1B344298	N/A	N/A	33-827858Q	NGK DPR 6EA-9	.035
25 FourStroke (Carb)	BEL	9973100 - 0P388282	N/A	N/A	33-827858Q	NGK DPR 6EA-9	.035
25 FourStroke (EFI)	JPN	0R106999 and up	N/A	N/A	33-803507	NGK DCPR6E	.033
25 FourStroke (EFI)	BEL	0P401000 and up	N/A	N/A	33-803507	NGK DCPR6E	.033
25 Jet, FourStroke	JPN	0R165086 and up	N/A	N/A	33-803507	NGK DCPR6E	.033
30 (Carb) FourStroke	USA	0G760300 - 1B226999	N/A	N/A	33-827858Q	NGK DPR 6EA-9	.035
30 (Carb) FourStroke	BEL	0P094500 - 0P400999	N/A	N/A	33-827858Q	NGK DPR 6EA-9	.035
30 (EFI) FourStroke	USA	0T409000 - 1B226999	N/A	N/A	33-883323001	Champion RA8HC	.040
30 (EFI) FourStroke	JPN	0R106999 and up	N/A	N/A	33-803507	NGK DCPR6E	.033
40 (3 cyl. Carb) FourStroke	USA	0G760300 - 1B226999	N/A	N/A	33-827858Q	NGK DPR 6EA-9	.035
40 (3 cyl. Carb) FourStroke	BEL	0P094500 - 0P400999	N/A	N/A	33-827858Q	NGK DPR 6EA-9	.035

OUTBOARD

Model		Serial # Range	Standard Spark Plug Mercury Part Number	Standard Spark Plug Manufacturer's No.	Suppressor(resistor) Spark Plug Mercury No.	Suppressor(resistor) Spark Plug Manufacturer's No.	Gap
40 (3 cyl. EFI) FourStroke	USA	0T409000 and up	N/A	N/A	33-883323001	Champion RA8HC	.040
40 (3 cyl. EFI) FourStroke	BEL	0P153500 and up	N/A	N/A	33-883323001	Champion RA8HC	.040
40 (3 cyl. EFI) FourStroke	CHN	1C000001 and up	N/A	N/A	33-883323001	Champion RA8HC	.040
40/45 (4 cyl.) FourStroke	USA	0G231123 - 0T178499	N/A	N/A	33-827858Q	NGK DPR 6EA-9	.035
40 (4 cyl. Carb) FourStroke	USA	0T228405 - 0T598999	N/A	N/A	33-827858Q	NGK DPR 6EA-9	.035
40 (4 cyl. Carb) FourStroke	BEL	0P094500 - 0P206999	N/A	N/A	33-827858Q	NGK DPR 6EA-9	.035
40 (4 cyl. EFI) FourStroke	USA	0T409000 and up	N/A	N/A	33-883323001	Champion RA8HC	.040
40 (4 cyl. EFI) FourStroke	BEL	0P207000 and up	N/A	N/A	33-883323001	Champion RA8HC	.040
40 (4 cyl. EFI) FourStroke	CHN	1C000001 and up	N/A	N/A	33-883323001	Champion RA8HC	.040
40 JET (4 cyl. EFI) FourStroke	CHN	1C051324 and up	N/A	N/A	33-883323001	Champion RA8HC	.040
50 FourStroke	USA	0G231123 - 0T178499	N/A	N/A	33-827858Q	NGK DPR 6EA-9	.035
50 (Carb) FourStroke	USA	0T178500 - 0T598999	N/A	N/A	33-827858Q	NGK DPR 6EA-9	.035
50 (Carb) FourStroke	BEL	0P094500 - 0P206999	N/A	N/A	33-827858Q	NGK DPR 6EA-9	.035
50 (EFI) FourStroke	USA	0T409000 and up	N/A	N/A	33-883323001	Champion RA8HC	.040
50 (EFI) FourStroke	BEL	0P207000 and up	N/A	N/A	33-883323001	Champion RA8HC	.040
50 (EFI) FourStroke	CHN	1C000001 and up	N/A	N/A	33-883323001	Champion RA8HC	.040
60 (Carb) FourStroke	USA	0T178500 - 0T598999	N/A	N/A	33-827858Q	NGK DPR 6EA-9	.035
60 (Carb) FourStroke	BEL	0P094500 - 0P206999	N/A	N/A	33-827858Q	NGK DPR 6EA-9	.035
60 (EFI) FourStroke	USA	0T409000 and up	N/A	N/A	33-883323001	Champion RA8HC	.040
60 (EFI) FourStroke	BEL	0P207000 and up	N/A	N/A	33-883323001	Champion RA8HC	.040
60 (EFI) FourStroke	CHN	1C000001 and up	N/A	N/A	33-883323001	Champion RA8HC	.040
75 FourStroke, 1596cc	USA	0G960500 - 1B366822	N/A	N/A	859495Q	NGK LFR5A-11	.043
75 FourStroke, 1.7L	USA	1B366823 - 2B094995	N/A	N/A	33-898829001	NGK LFR4A-E	.032
75 FourStroke, 2.1L	USA	2B094996 and up	N/A	N/A	33-8M0057936	NGK ZFR5F	.032
80 FourStroke, 1.7L	USA	1B366823 - 2B094955	N/A	N/A	33-898829001	NGK LFR4A-E	.032
80 FourStroke, 2.1L	USA	2B094956 and up	N/A	N/A	33-8M0057936	NGK ZFR5F	.032
80 FourStroke	BEL	0P401000 and up	N/A	N/A	33-898829001	NGK LFR4A-E	.032
90 FourStroke, 1596cc	USA	0G960500 - 1B366822	N/A	N/A	859495Q	NGK LFR5A-11	.043
90 FourStroke, 1.7L	USA	1B366823 - 2B094995	N/A	N/A	33-898829001	NGK LFR4A-E	.032
90 FourStroke, 2.1L	USA	2B094996 and up	N/A	N/A	33-8M0057936	NGK ZFR5F	.032
100 FourStroke, 1.7L	USA	1B366823 - 2B094995	N/A	N/A	33-898829001	NGK LFR4A-E	.032
100 Fourstroke, 2.1L	USA	2B094996 and up	N/A	N/A	33-8M0057936	NGK ZFR5F	.032
100 FourStroke	BEL	0P401000 and up	N/A	N/A	33-898829001	NGK LFR4A-E	.032
115 (EFI) FourStroke, 1741cc	USA	0T178500 - 1B366822	N/A	N/A	33-881284Q	NGK LFR6A-11	.041
115 FourStroke, 1.7L	USA	1B366823 - 2B094995	N/A	N/A	33-898829001	NGK LFR4A-E	.032
115/115 ProXS FourStroke, 2.1L	USA	2B094996 and up	N/A	N/A	33-8M0057936	NGK ZFR5F	.032
135 Verado	USA	1B227000 and up	N/A	N/A	33-889246Q39	NGK ILFR6GE	.031
135 Verado	BEL	0P419487 and up	N/A	N/A	33-889246Q39	NGK ILFR6GE	.031
150 EFI FourStroke	USA	1B905505 and up	N/A	N/A	33-8M0057936	NGK ZFR5F	.032
150 Verado	USA	1B227000 and up	N/A	N/A	33-889246Q39	NGK ILFR6GE	.031
150 Verado	BEL	0P419487 and up	N/A	N/A	33-889246Q39	NGK ILFR6GE	.031
175 Verado	USA	1B227000 and up	N/A	N/A	33-889246Q39	NGK ILFR6GE	.031
175 Verado	BEL	0P464488 and up	N/A	N/A	33-889246Q39	NGK ILFR6GE	.031
200 Verado, 4&6 cylinder	USA	0T980000 and up	N/A	N/A	33-889246Q39	NGK ILFR6GE	.031
200 Verado, 4&6 cylinder	BEL	0P409357 and up	N/A	N/A	33-889246Q39	NGK ILFR6GE	.031
225 (EFI) FourStroke	USA	0T653945 and up	N/A	N/A	859495Q	NGK LFR5A-11	.043
225 Verado	USA	0T980000 and up	N/A	N/A	33-889246Q39	NGK ILFR6GE	.031
225 Verado	BEL	0P409357 and up	N/A	N/A	33-889246Q39	NGK ILFR6GE	.031
250 Verado	USA	0T980000 and up	N/A	N/A	33-889246Q39	NGK ILFR6GE	.031
250 Verado	BEL	0P409357 and up	N/A	N/A	33-889246Q39	NGK ILFR6GE	.031
275 Verado	USA	0T980000 and up	N/A	N/A	33-889246Q39	NGK ILFR6GE	.031
275 Verado	BEL	0P409357 and up	N/A	N/A	33-889246Q39	NGK ILFR6GE	.031

Model		Serial # Range	Standard Spark Plug Mercury Part Number	Standard Spark Plug Manufacturer's No.	Suppressor(resistor) Spark Plug Mercury No.	Suppressor(resistor) Spark Plug Manufacturer's No.	Gap
300 Verado	USA	0T980000 and up	N/A	N/A	33-889246Q39	NGK ILFR6GE	.031
300 Verado	BEL	0P520553 and up	N/A	N/A	33-889246Q39	NGK ILFR6GE	.031
350 Verado	USA	1B718256 and up	N/A	N/A	33-889246Q39	NGK ILFR6GE	.031

SPARK PLUG APPLICATION CHART - 2-CYCLE

Spark Plug Application Chart - 2-Cycle Outboard

Model		Serial # Range	Standard Spark Plug Mercury Part Number	Standard Spark Plug Manufacturer's No.	Suppressor(resistor) Spark Plug Mecury No.	Suppressor(resistor) Spark Plug Manufacturer's No.	Gap
2.2	USA	8075603 and up	N/A	N/A	33- 19796	NGK BPR6HS-10	.040
2.5		0A855097 and up	33- 12127	NGK BP6HS-10	33- 19796	NGK BPR6HS-10	.040
3		0A855097 - 0G710612	N/A	N/A	33- 19796	NGK BPR6HS-10	.040
3.3		0D901217 and up	33- 12127	NGK BP6HS-10	33- 19796	NGK BPR6HS-10	.040
3.5	USA	6202173 and up	33- 12127	NGK BP6HS-10	33- 19796	NGK BPR6HS-10	.040
3.6	USA	5404657 and up	33- 97184	NGK BP7HS-10	33- 17719547	NGK BPR7HS-10	.040
3.6	BEL	9252831 and up	33- 97184	NGK BP7HS-10	33- 17719547	NGK BPR7HS-10	.040
3.6	CAN	7145388 and up	33- 97184	NGK BP7HS-10	33- 17719547	NGK BPR7HS-10	.040
3.9 (39)		1655013 - 2498135	33- 84675M	NGK B5HS	N/A	N/A	.025
4 (40)(1 cyl.)		2498136 - 2771621	33- 84675M	NGK B5HS	N/A	N/A	.030
4 (40)(1 cyl.)		2771622 - 0A809600	33- 97182Q	NGK BUHW-2	33- 14103Q	NGK BUZHW-2	
4 (40)(2 cyl.) Gnat	BEL	9075839 - 9256980	33- 82370M 1	NGK B6HS	33-813472	NGK BR6HS	.050
4 (40)(2 cyl.) Gnat	CAN	7085673 - 7146487	33- 82370M 1	NGK B6HS	33-813472	NGK BR6HS	.050
4 (40)(2 cyl.)	USA	5589202 - 5595531	33- 97184	NGK BP7HS-10	33- 17719547	NGK BPR7HS-10	.040
4 (40)(2 cyl.)	AUS	8065265 - 8068064	33- 97184	NGK BP7HS-10	33- 17719547	NGK BPR7HS-10	.040
4 (40)(2 cyl.)	BEL	9256981 - 9258280	33- 97184	NGK BP7HS-10	33- 17719547	NGK BPR7HS-10	.040
4 (40)(2 cyl.)	CAN	7146488 - 7143687	33- 97184	NGK BP7HS-10	33- 17719547	NGK BPR7HS-10	.040
4 (1 cyl.)	USA	0A809601 and up	33- 97184	NGK BP7HS-10	33- 17719547	NGK BPR7HS-10	.040
4 (1 cyl.)	BEL	9477830 and up	33- 97184	NGK BP7HS-10	33- 17719547	NGK BPR7HS-10	.040
4.5 (45)(1 cyl.)	USA	4107220 - 0A809600	33- 97182Q	NGK BUHW-2	33- 14103Q	NGK BUZHW-2	
4.5 (45)(1 cyl.)	AUS	8026540 and up	33- 97182Q	NGK BUHW-2	33- 14103Q	NGK BUZHW-2	
4.5 (45)(1 cyl.)	BEL	9072179 - 9477829	33- 97182Q	NGK BUHW-2	33- 14103Q	NGK BUZHW-2	
4.5 (45)(1 cyl.)	CAN	7045758 and up	33- 97182Q	NGK BUHW-2	33- 14103Q	NGK BUZHW-2	
5 (1 cyl.)	USA	0A809601 and up	33- 97184	NGK BP7HS-10	33- 17719547	NGK BPR7HS-10	.040
5 (1 cyl.)	BEL	9477830 and up	33- 97184	NGK BP7HS-10	33- 17719547	NGK BPR7HS-10	.040
6 (60)	USA	1408611 - 2126763	33-813469	NGK B6S	N/A	N/A	.025
6 (60)	CAN	1958792 - 2096170	33-813469	NGK B6S	N/A	N/A	.025
6 (60)(60J)	USA	2126764 and up	33- 82370M 1	NGK B6HS	33-813472	NGK BR6HS	.030
6 (60)(60J)	CAN	2096171 and up	33- 82370M 1	NGK B6HS	33-813472	NGK BR6HS	.030
6	USA	0A197112 - 0T800749	33-816737Q	NGK BP8H-N-10	33-816837Q	NGK BPZ8H-N-10	.040
6	BEL	9461526 and up	33-816737Q	NGK BP8H-N-10	33-816837Q	NGK BPZ8H-N-10	.040
7.5 (75)		2529895 - 3801457	33- 97182Q	NGK BUHW-2	33- 14103Q	NGK BUZHW-2	
7.5 (75)	USA	3801458 - 4851692	33- 97180Q	NGK BUHW	33- 14103550	NGK BUZHW	
7.5 (75)	AUS	8015315 - 8051349	33- 97180Q	NGK BUHW	33- 14103550	NGK BUZHW	
7.5 (75)	BEL	9043194 - 9181725	33- 97180Q	NGK BUHW	33- 14103550	NGK BUZHW	
7.5 (75)	CAN	7028598 - 7111897	33- 97180Q	NGK BUHW	33- 14103550	NGK BUZHW	
7.5 (75)	USA	4851693 - 5226934	33- 97182Q	NGK BUHW-2	33- 14103Q	NGK BUZHW-2	
7.5 (75)	AUS	8051350 - 8058019	33- 97182Q	NGK BUHW-2	33- 14103Q	NGK BUZHW-2	
7.5 (75)	BEL	9181726 - 9219255	33- 97182Q	NGK BUHW-2	33- 14103Q	NGK BUZHW-2	
7.5 (75)	CAN	7111898 - 7136037	33- 97182Q	NGK BUHW-2	33- 14103Q	NGK BUZHW-2	
7.5	USA	5206550 and up	33- 97186	NGK B9HS-10	33-813418	NGK BR9HS-10	.040
7.5	AUS	8057545 and up	33- 97186	NGK B9HS-10	33-813418	NGK BR9HS-10	.040
7.5	BEL	9217756 and up	33- 97186	NGK B9HS-10	33-813418	NGK BR9HS-10	.040

OUTBOARD

Model		Serial # Range	Standard Spark Plug Mercury Part Number	Standard Spark Plug Manufacturer's No.	Suppressor(resistor) Spark Plug Mecury No.	Suppressor(resistor) Spark Plug Manufacturer's No.	Gap
7.5	CAN	7125388 and up	33- 97186	NGK B9HS-10	33-813418	NGK BR9HS-10	.040
8	USA	0A197112 and up	33-816737Q	NGK BP8H-N-10	33-816837Q	NGK BPZ8H-N-10	.040
8	BEL	9461526 and up	33-816737Q	NGK BP8H-N-10	33-816837Q	NGK BPZ8H-N-10	.040
9.8 (110)		1470349 - 2098351	33-813469	NGK B6S	N/A	N/A	.025
9.8 (110)		2098352 - 2798056	33- 82371M	NGK B7HS	N/A	N/A	.030
9.8 (110)		2798057 - 3795657	33- 97182Q	NGK BUHW-2	33- 14103Q	NGK BUZHW-2	
9.8 (110)	USA	3795658 - 4839253	33- 97180Q	NGK BUHW	33- 14103550	NGK BUZHW	
9.8 (110)	AUS	8015040 - 8050624	33- 97180Q	NGK BUHW	33- 14103550	NGK BUZHW	
9.8 (110)	BEL	9041439 - 9165304	33- 97180Q	NGK BUHW	33- 14103550	NGK BUZHW	
9.8 (110)	CAN	7027323 - 7111347	33- 97180Q	NGK BUHW	33- 14103550	NGK BUZHW	
9.8 (110)	USA	4839254 - 5206549	33- 97182Q	NGK BUHW-2	33- 14103Q	NGK BUZHW-2	
9.8 (110)	AUS	8050625 - 8057544	33- 97182Q	NGK BUHW-2	33- 14103Q	NGK BUZHW-2	
9.8 (110)	BEL	9165303 - 9217755	33- 97182Q	NGK BUHW-2	33- 14103Q	NGK BUZHW-2	
9.8 (110)	CAN	7111348 - 7125387	33- 97182Q	NGK BUHW-2	33- 14103Q	NGK BUZHW-2	
9.8	USA	5206550 and up	33- 97186	NGK B9HS-10	33-813418	NGK BR9HS-10	.040
9.8	AUS	8057545 and up	33- 97186	NGK B9HS-10	33-813418	NGK BR9HS-10	.040
9.8	BEL	9217756 and up	33- 97186	NGK B9HS-10	33-813418	NGK BR9HS-10	.040
9.8	CAN	7125388 and up	33- 97186	NGK B9HS-10	33-813418	NGK BR9HS-10	.040
9.9	USA	0A197112 - 0G112449	33-816737Q	NGK BP8H-N-10	33-816837Q	NGK BPZ8H-N-10	.040
9.9	BEL	9461526 - 9831799	33-816737Q	NGK BP8H-N-10	33-816837Q	NGK BPZ8H-N-10	.040
9.9	USA	0G112450 and up	33- 19424	NGK BP8HS-15	33- 14814568	NGK BPZ8HS-15	.060
9.9	BEL	9831800 and up	33- 19424	NGK BP8HS-15	33- 14814568	NGK BPZ8HS-15	.060
10 (100)		1290910 - 1499331	33-813469	NGK B6S	N/A	N/A	.025
10 (XR10/SEA PRO 10)	USA	0D038000 and up	33- 19424	NGK BP8HS-15	33- 14814568	NGK BPZ8HS-15	.060
10 (XR10/SEA PRO 10)	BEL	9596000 and up	33- 19424	NGK BP8HS-15	33- 14814568	NGK BPZ8HS-15	.060
10 Magnum/Marathon	USA	0D038000 and up	33- 19424	NGK BP8HS-15	33- 14814568	NGK BPZ8HS-15	.060
10 Magnum/Marathon	BEL	9596000 and up	33- 19424	NGK BP8HS-15	33- 14814568	NGK BPZ8HS-15	.060
15 (150)		1290910 - 1499331	33-813469	NGK B6S	N/A	N/A	.025
15	USA	0B292414 and up	33- 19424	NGK BP8HS-15	33- 14814568	NGK BPZ8HS-15	.060
15	BEL	9542620 and up	33- 19424	NGK BP8HS-15	33- 14814568	NGK BPZ8HS-15	.060
15 Sea Pro/Marathon	USA	0G044365 - 0G437999	33-816737Q	NGK BP8H-N-10	33-816837Q	NGK BPZ8H-N-10	.040
15 Sea Pro/Marathon	USA	0G438000 and up	33- 19424	NGK BP8HS-15	33- 14814568	NGK BPZ8HS-15	.060
15 Sea Pro/Marathon	BEL	9927000 and up	33- 19424	NGK BP8HS-15	33- 14814568	NGK BPZ8HS-15	.060
15 Sea Pro XD	BEL	9927000 and up	33-816737Q	NGK BP8H-N-10	33-816837Q	NGK BPZ8H-N-10	.040
15 (Super 15)	USA	0B238464 and up	33-816737Q	NGK BP8H-N-10	33-816837Q	NGK BPZ8H-N-10	.040
15 (Super 15)	BEL	9507381 and up	33-816737Q	NGK BP8H-N-10	33-816837Q	NGK BPZ8H-N-10	.040
15 (Super 15)	CAN	0A730007 and up	33-816737Q	NGK BP8H-N-10	33-816837Q	NGK BPZ8H-N-10	.040
18 (18, 18XD)	USA	5837437 and up	33-816737Q	NGK BP8H-N-10	33-816837Q	NGK BPZ8H-N-10	.040
18 (18, 18XD)	AUS	8071973 and up	33-816737Q	NGK BP8H-N-10	33-816837Q	NGK BPZ8H-N-10	.040
18 (18, 18XD)	BEL	9308306 and up	33-816737Q	NGK BP8H-N-10	33-816837Q	NGK BPZ8H-N-10	.040
20 (200)		1290910 - 1499331	33-813469	NGK B6S	N/A	N/A	.025
20 (200)		1558310 - 2094830	33-813469	NGK B6S	N/A	N/A	.025
20 (200)		2094831 - 2827676	33- 82371M	NGK B7HS	N/A	N/A	.030
20 (20, 200)	USA	2827677 - 6443972	33- 97182Q	NGK BUHW-2	33- 14103Q	NGK BUZHW-2	
20 (20, 200)	AUS	8006265 and up	33- 97182Q	NGK BUHW-2	33- 14103Q	NGK BUZHW-2	
20 (20, 200)	BEL	9016254 - 9415100	33- 97182Q	NGK BUHW-2	33- 14103Q	NGK BUZHW-2	
20 (20, 200)	CAN	7012358 - 7209532	33- 97182Q	NGK BUHW-2	33- 14103Q	NGK BUZHW-2	
20 (20, 20XD)	USA	6443973 - 0T800749	33-816737Q	NGK BP8H-N-10	33-816837Q	NGK BPZ8H-N-10	.040
20 (20, 20XD)	BEL	9415101 and up	33-816737Q	NGK BP8H-N-10	33-816837Q	NGK BPZ8H-N-10	.040
20 (20, 20XD)	CAN	7209533 and up	33-816737Q	NGK BP8H-N-10	33-816837Q	NGK BPZ8H-N-10	.040

Model		Serial # Range	Standard Spark Plug Mercury Part Number	Standard Spark Plug Manufacturer's No.	Suppressor(resistor) Spark Plug Mecury No.	Suppressor(resistor) Spark Plug Manufacturer's No.	Gap
20 JET	USA	5705532 and up	33-816737Q	NGK BP8H-N-10	33-816837Q	NGK BPZ8H-N-10	.040
20 JET	AUS	8073158 and up	33-816737Q	NGK BP8H-N-10	33-816837Q	NGK BPZ8H-N-10	.040
20 JET	BEL	9315316 and up	33-816737Q	NGK BP8H-N-10	33-816837Q	NGK BPZ8H-N-10	.040
20 JET	CAN	7166928 and up	33-816737Q	NGK BP8H-N-10	33-816837Q	NGK BPZ8H-N-10	.040
25 (250)		1290910 - 1499331	33-813469	NGK B6S	N/A	N/A	.025
25 (25, 25XD, 20 JET)	USA	5705532 and up	33-816737Q	NGK BP8H-N-10	33-816837Q	NGK BPZ8H-N-10	.040
25 (25, 25XD, 20 JET)	AUS	8073158 and up	33-816737Q	NGK BP8H-N-10	33-816837Q	NGK BPZ8H-N-10	.040
25 (25, 25XD, 20 JET)	BEL	9315316 and up	33-816737Q	NGK BP8H-N-10	33-816837Q	NGK BPZ8H-N-10	.040
25 (25, 25XD, 20 JET)	CAN	7166928 and up	33-816737Q	NGK BP8H-N-10	33-816837Q	NGK BPZ8H-N-10	.040
25 LIGHTNING(3 cyl)	USA	0E268781 and up	33-896323	Champion L82C	33-896329874	Champion RL82C	.035
30 (300)		1271884 - 1960826	33-813469	NGK B6S	N/A	N/A	.025
30 (2 cyl.)644cc	USA	0G053314 - 0T598999	33-816737Q	NGK BP8H-N-10	33-816837Q	NGK BPZ8H-N-10	.040
30 (2 cyl.)644cc	BEL	9854537 - 0P206999	33-816737Q	NGK BP8H-N-10	33-816837Q	NGK BPZ8H-N-10	.040
30 (Lightning)430cc	USA	0G575500 and up	33- 41263M	NGK B7HS-10	33-828942	NGK BR7HS-10	.040
30 JET (4 cylinder)	USA	0C159200 - 0G589999	33- 97182Q	NGK BUHW-2	33- 14103Q	NGK BUZHW-2	
30 JET (4 cylinder)	BEL	9570790 - 9973099	33- 97182Q	NGK BUHW-2	33- 14103Q	NGK BUZHW-2	
30 JET (3 cylinder)	USA	0G590000 - 0T178499	33-816737Q	NGK BP8H-N-10	33-816837Q	NGK BPZ8H-N-10	.040
30 JET (3 cylinder)	BEL	9973100 - 0P094499	33-816737Q	NGK BP8H-N-10	33-816837Q	NGK BPZ8H-N-10	.040
35 (350, 35A)		1271884 - 1960826	33-813469	NGK B6S	N/A	N/A	.025
35 (350)		1960827 - 2097831	33-813413	NGK B7S	N/A	N/A	.025
35 (350)		2097832 - 2874703	33- 82371M	NGK B7HS	N/A	N/A	.030
35	USA	6445653 and up	33- 97180Q	NGK BUHW	33- 14103550	NGK BUZHW	
35	BEL	9384476 and up	33- 97180Q	NGK BUHW	33- 14103550	NGK BUZHW	
35	CAN	7209608 and up	33- 97180Q	NGK BUHW	33- 14103550	NGK BUZHW	
40 (400)		1279685 - 1476509	33-813469	NGK B6S	N/A	N/A	.025
40 (40, 400, 402)	USA	2874704 - 0G053313	33- 97180Q	NGK BUHW	33- 14103550	NGK BUZHW	
40 (40, 400, 402)	AUS	8002335 and up	33- 97180Q	NGK BUHW	33- 14103550	NGK BUZHW	
40 (40, 400, 402)	BEL	3339688 and up	33- 97180Q	NGK BUHW	33- 14103550	NGK BUZHW	
40 (40, 400, 402)	CAN	3340783 and up	33- 97180Q	NGK BUHW	33- 14103550	NGK BUZHW	
40 (2 cyl.)	USA	0G053314 and up	33-816737Q	NGK BP8H-N-10	33-816837Q	NGK BPZ8H-N-10	.040
40 (3 cyl.)	USA	0G531301 and up	33-816737Q	NGK BP8H-N-10	33-816837Q	NGK BPZ8H-N-10	.040
40 (3 cyl.)	BEL	9973100 and up	33-816737Q	NGK BP8H-N-10	33-816837Q	NGK BPZ8H-N-10	.040
40 (4 cyl.)	USA	0C159200 and up	33- 97182Q	NGK BUHW-2	33- 14103Q	NGK BUZHW-2	
40 (4 cyl.)	BEL	9570790 and up	33- 97182Q	NGK BUHW-2	33- 14103Q	NGK BUZHW-2	
40 JET	USA	0T178500 and up	33-816737Q	NGK BP8H-N-10	33-816837Q	NGK BPZ8H-N-10	.040
40 JET	BEL	0P094500 and up	33-816737Q	NGK BP8H-N-10	33-816837Q	NGK BPZ8H-N-10	.040
45 (450)		1476510 - 1531568	33-813469	NGK B6S	N/A	N/A	.025
45 (4 cyl.)	USA	5531630 and up	33- 97182Q	NGK BUHW-2	33- 14103Q	NGK BUZHW-2	
45 (4 cyl.)	AUS	8063985 and up	33- 97182Q	NGK BUHW-2	33- 14103Q	NGK BUZHW-2	
45 (4 cyl.)	BEL	9248006 and up	33- 97182Q	NGK BUHW-2	33- 14103Q	NGK BUZHW-2	
45 (4 cyl.)	CAN	7143688 and up	33- 97182Q	NGK BUHW-2	33- 14103Q	NGK BUZHW-2	
45 JET	USA	0G760300 - 0T129554	33-816737Q	NGK BP8H-N-10	33-816837Q	NGK BPZ8H-N-10	.040
45 JET	BEL	0P017000 - 0P094499	33-816737Q	NGK BP8H-N-10	33-816837Q	NGK BPZ8H-N-10	.040
50 (500)	USA	1421113 - 2097444	33-813469	NGK B6S	N/A	N/A	.025
50 (500)	CAN	1770179 - 2116317	33-813469	NGK B6S	N/A	N/A	.025
50 (500)	USA	2097445 - 4357639	33- 97180Q	NGK BUHW	33- 14103550	NGK BUZHW	
50 (500)	AUS	2863739 - 8029514	33- 97180Q	NGK BUHW	33- 14103550	NGK BUZHW	
50 (500)	BEL	9001581 - 9107213	33- 97180Q	NGK BUHW	33- 14103550	NGK BUZHW	
50 (500)	CAN	2116318 - 7068997	33- 97180Q	NGK BUHW	33- 14103550	NGK BUZHW	
50 (50, 500)(4 cyl.)	USA	4357640 and up	33- 97182Q	NGK BUHW-2	33- 14103Q	NGK BUZHW-2	
50 (50, 500)(4 cyl.)	AUS	8030090 and up	33- 97182Q	NGK BUHW-2	33- 14103Q	NGK BUZHW-2	
50 (50, 500)(4 cyl.)	BEL	9107214 and up	33- 97182Q	NGK BUHW-2	33- 14103Q	NGK BUZHW-2	
50 (50, 500)(4 cyl.)	CAN	7068998 and up	33- 97182Q	NGK BUHW-2	33- 14103Q	NGK BUZHW-2	
50 (3 cyl.)	USA	6428681 - 0D000749	33- 97180Q	NGK BUHW	33- 14103550	NGK BUZHW	

OUTBOARD

Model		Serial # Range	Standard Spark Plug Mercury Part Number	Standard Spark Plug Manufacturer's No.	Suppressor(resistor) Spark Plug Mecury No.	Suppressor(resistor) Spark Plug Manufacturer's No.	Gap
50 (3 cyl.)	BEL	9385911 - 9683054	33- 97180Q	NGK BUHW	33- 14103550	NGK BUZHW	
50 (3 cyl.)	CAN	7208333 and up	33- 97180Q	NGK BUHW	33- 14103550	NGK BUZHW	
50 (3 cyl.)	USA	0D000750 and up	33-816737Q	NGK BP8H-N-10	33-816837Q	NGK BPZ8H-N-10	.040
50 (3 cyl.)	BEL	9683055 and up	33-816737Q	NGK BP8H-N-10	33-816837Q	NGK BPZ8H-N-10	.040
55 (3 cyl.)	USA	0D000750 and up	33-816737Q	NGK BP8H-N-10	33-816837Q	NGK BPZ8H-N-10	.040
55 (3 cyl.)	BEL	9741042 and up	33-816737Q	NGK BP8H-N-10	33-816837Q	NGK BPZ8H-N-10	.040
60 (600)		1303411 - 1542744	33-813469	NGK B6S	N/A	N/A	.025
60 (3 cyl.)	USA	6428681 - 0D000749	33- 97180Q	NGK BUHW	33- 14103550	NGK BUZHW	
60 (3 cyl.)	BEL	9385911 - 9683054	33- 97180Q	NGK BUHW	33- 14103550	NGK BUZHW	
60 (3 cyl.)	CAN	7208333 and up	33- 97180Q	NGK BUHW	33- 14103550	NGK BUZHW	
60 (3 cyl.)	USA	0D000750 and up	33-816737Q	NGK BP8H-N-10	33-816837Q	NGK BPZ8H-N-10	.040
60 (3 cyl.)	BEL	9683055 and up	33-816737Q	NGK BP8H-N-10	33-816837Q	NGK BPZ8H-N-10	.040
65 (650)(4 cyl.)		1542745 - 2119748	33-813413	NGK B7S	N/A	N/A	.025
65 (650S)(4 cyl.)		2119749 - 2309310	33- 82371M	NGK B7HS	N/A	N/A	.030
65 (650SS)(4 cyl.)		2119749 - 2309310	33- 97180Q	NGK BUHW	33- 14103550	NGK BUZHW	
65 (650)(3 cyl.)	USA	3293184 - 4571651	33- 97180Q	NGK BUHW	33- 14103550	NGK BUZHW	
65 (650)(3 cyl.)	AUS	8006640 and up	33- 97180Q	NGK BUHW	33- 14103550	NGK BUZHW	
65 (650)(3 cyl.)	BEL	9020074 - 9135824	33- 97180Q	NGK BUHW	33- 14103550	NGK BUZHW	
65 (650)(3 cyl.)	CAN	7013633 - 7087822	33- 97180Q	NGK BUHW	33- 14103550	NGK BUZHW	
65 JET	USA	0D283222 and up	33- 97182Q	NGK BUHW-2	33- 14103Q	NGK BUZHW-2	
65 JET	BEL	9793577 and up	33- 97182Q	NGK BUHW-2	33- 14103Q	NGK BUZHW-2	
70 (700)		1296411 - 1566239	33-813469	NGK B6S	N/A	N/A	.025
70 (3 cyl.)	USA	4571652 - 6428680	33- 97180Q	NGK BUHW	33- 14103550	NGK BUZHW	
70 (3 cyl.)	AUS	8042350 and up	33- 97180Q	NGK BUHW	33- 14103550	NGK BUZHW	
70 (3 cyl.)	BEL	9135825 - 9385910	33- 97180Q	NGK BUHW	33- 14103550	NGK BUZHW	
70 (3 cyl.)	CAN	7087823 - 7208332	33- 97180Q	NGK BUHW	33- 14103550	NGK BUZHW	
70 (3 cyl.)	USA	0A996142 - 0C221999	33- 97182Q	NGK BUHW-2	33- 14103Q	NGK BUZHW-2	
70 (3 cyl.)	BEL	9483121 - 9589038	33- 97182Q	NGK BUHW-2	33- 14103Q	NGK BUZHW-2	
75 (4 cyl.)	USA	6432907 and up	33- 97182Q	NGK BUHW-2	33- 14103Q	NGK BUZHW-2	
75 (4 cyl.)	BEL	9393856 and up	33- 97182Q	NGK BUHW-2	33- 14103Q	NGK BUZHW-2	
75 (4 cyl.)	CAN	7208573 and up	33- 97182Q	NGK BUHW-2	33- 14103Q	NGK BUZHW-2	
75 (3 cyl.)	USA	0C222000 and up	33- 97182Q	NGK BUHW-2	33- 14103Q	NGK BUZHW-2	
75 (3 cyl.)	BEL	9589039 and up	33- 97182Q	NGK BUHW-2	33- 14103Q	NGK BUZHW-2	
75 (3 cyl.)(1.5L Optimax)	USA	0T980000 and up	N/A	N/A	33-892567Q	NGK IZFR5J	.032
80 (800)(6 cyl.)		1335465 - 1566239	33-813413	NGK B7S	N/A	N/A	.025
80 (800)(4 cyl.)		2559001 - 3493912	33- 97180Q	NGK BUHW	33- 14103550	NGK BUZHW	
80 (80, 800)(4 cyl.)	USA	4831999 - 6432900	33- 97182Q	NGK BUHW-2	33- 14103Q	NGK BUZHW-2	
80 (80, 800)(4 cyl.)	AUS	8050200 and up	33- 97182Q	NGK BUHW-2	33- 14103Q	NGK BUZHW-2	
80 (80, 800)(4 cyl.)	BEL	9177626 - 9393855	33- 97182Q	NGK BUHW-2	33- 14103Q	NGK BUZHW-2	
80 (80, 800)(4 cyl.)	CAN	7110998 - 7208572	33- 97182Q	NGK BUHW-2	33- 14103Q	NGK BUZHW-2	
80 (3 cyl.)	USA	0A996142 - 0C221999	33- 97182Q	NGK BUHW-2	33- 14103Q	NGK BUZHW-2	
80 (3 cyl.)	BEL	9483121 - 9589038	33- 97182Q	NGK BUHW-2	33- 14103Q	NGK BUZHW-2	
80 JET	USA	0D283222 and up	33-816737Q	NGK BP8H-N-10	33-816837Q	NGK BPZ8H-N-10	.040
80 JET	BEL	9793577 and up	33-816737Q	NGK BP8H-N-10	33-816837Q	NGK BPZ8H-N-10	.040
85 (850)(6 cyl.)		1460999 - 1766823	33-813413	NGK B7S	N/A		.025
85 (850)(4 cyl.)	USA	3493913 - 4831998	33- 97180Q	NGK BUHW	33- 14103550	NGK BUZHW	
85 (850)(4 cyl.)	AUS	8005440 - 8050199	33- 97180Q	NGK BUHW	33- 14103550	NGK BUZHW	
85 (850)(4 cyl.)	BEL	9011604 - 9177625	33- 97180Q	NGK BUHW	33- 14103550	NGK BUZHW	
85 (850)(4 cyl.)	CAN	7010108 - 7110997	33- 97180Q	NGK BUHW	33- 14103550	NGK BUZHW	
90 (900)		1766824 - 1869775	33-813413	NGK B7S	N/A	N/A	.025
90 (90, 900)(6 cyl.)	USA	4845301 and up	33- 97180Q	NGK BUHW	33- 14103550	NGK BUZHW	
90 (90, 900)(6 cyl.)	AUS	8060545 and up	33- 97180Q	NGK BUHW	33- 14103550	NGK BUZHW	
90 (90, 900)(6 cyl.)	CAN	7111698 and up	33- 97180Q	NGK BUHW	33- 14103550	NGK BUZHW	
90 (3 cyl.)	USA	0A996142 and up	33- 97182Q	NGK BUHW-2	33- 14103Q	NGK BUZHW-2	

Model		Serial # Range	Standard Spark Plug Mercury Part Number	Standard Spark Plug Manufacturer's No.	Suppressor(resistor) Spark Plug Mecury No.	Suppressor(resistor) Spark Plug Manufacturer's No.	Gap
90 (3 cyl.)	BEL	9483121 and up	33- 97182Q	NGK BUHW-2	33- 14103Q	NGK BUZHW-2	
90 (3 cyl.)(1.5L Optimax)	USA	0T801000 and up	N/A	N/A	33-892567Q	NGK IZFR5J	.032
95 (950)		1869776 - 1962186	33- 82371M	NGK B7HS	N/A	N/A	.030
95 (950)		1962187 - 2318585	33- 97180Q	NGK BUHW	33- 14103550	NGK BUZHW	
100 (1000)		1464949 - 2318585	33-813413	NGK B7S	N/A	N/A	.025
100 (1000SS/1000BP)		2318586 - 3253111	33- 97180Q	NGK BUHW	33- 14103550	NGK BUZHW	
100 (4 cyl.)	USA	0B209468 - 0G960499	33-816737Q	NGK BP8H-N-10	33-816837Q	NGK BPZ8H-N-10	.040
100 (4 cyl.)	BEL	9523034 - 0P058999	33-816737Q	NGK BP8H-N-10	33-816837Q	NGK BPZ8H-N-10	.040
110 (1100)		1870204 - 1962661	33- 82371M	NGK B7HS	N/A	N/A	.030
110 (1100)		1962662 - 2314955	33- 97180Q	NGK BUHW	33- 14103550	NGK BUZHW	
115 (115, 1150)(6 cyl.)	USA	2836019 and up	33- 97180Q	NGK BUHW	33- 14103550	NGK BUZHW	
115 (115, 1150)(6 cyl.)	AUS	8008665 and up	33- 97180Q	NGK BUHW	33- 14103550	NGK BUZHW	
115 (115, 1150)(6 cyl.)	CAN	7010763 and up	33- 97180Q	NGK BUHW	33- 14103550	NGK BUZHW	
115 (4 cyl.)	USA	0C100000 and up	33-816737Q	NGK BP8H-N-10	33-816837Q	NGK BPZ8H-N-10	.040
115 (4 cyl.)	BEL	9559771 and up	33-816737Q	NGK BP8H-N-10	33-816837Q	NGK BPZ8H-N-10	.040
115 (3 cyl.)(1.5L Optimax)	USA	0T801000 and up	N/A	N/A	33-892567Q	NGK IZFR5J	.032
115 Pro XS	USA	1B751825 and up	N/A	N/A	33-892567Q	NGK IZFR5J	.032
125 (1250)(6 cyl.)		2314956 - 3253111	33- 97180Q	NGK BUHW	33- 14103550	NGK BUZHW	
125 (4 cyl.)	USA	0D283222 and up	33-816737Q	NGK BP8H-N-10	33-816837Q	NGK BPZ8H-N-10	.040
125 (4 cyl.)	BEL	9793577 and up	33-816737Q	NGK BP8H-N-10	33-816837Q	NGK BPZ8H-N-10	.040
135 (1350)(6 cyl.)		2839369 - 3293233	33- 97180Q	NGK BUHW	33- 14103550	NGK BUZHW	
140 (140, 1400)(6 cyl.)	USA	3293234 and up	33- 97180Q	NGK BUHW	33- 14103550	NGK BUZHW	
140 (140, 1400)(6 cyl.)	AUS	8052650 and up	33- 97180Q	NGK BUHW	33- 14103550	NGK BUZHW	
140 (140, 1400)(6 cyl.)	CAN	7112773 and up	33- 97180Q	NGK BUHW	33- 14103550	NGK BUZHW	
150 (1500)(6 cyl.)	USA	3502806 - 4865677	33- 97180Q	NGK BUHW	33- 14103550	NGK BUZHW	
150 (1500)(6 cyl.)	AUS	8005615 - 8052649	33- 97180Q	NGK BUHW	33- 14103550	NGK BUZHW	
150 (1500)(6 cyl.)	CAN	7010533 - 7112772	33- 97180Q	NGK BUHW	33- 14103550	NGK BUZHW	
V-135	USA	0A904646 and up	33- 13686Q	NGK BU8H	33- 14103568	NGK BUZ8H	
V-135 DFI	USA	0G590000 and up	N/A	N/A	33-889597Q	NGK IZFR5G	.032
V-150 (150, 1500) Carb	USA	4868998 - 0G960499	33- 13686Q	NGK BU8H	33- 14103568	NGK BUZ8H	
V-150 (150, 1500) Carb	USA	0G960500 and up	N/A	N/A	33- 14814Q	NGK BPZ8HS-10	.040
V-150 EFI	USA	0D082000 - 0G960499	33- 13686Q	NGK BU8H	33- 14103568	NGK BUZ8H	
V-150 EFI	USA	0G960500 and up	N/A	N/A	33- 14814Q	NGK BPZ8HS-10	.040
V-150 (XR2/4/6/Magnum II/III)	USA	4868998 - 0G960499	33- 13686Q	NGK BU8H	33- 14103568	NGK BUZ8H	
V-150 (XR2/4/6/Magnum II/III)	USA	0G960500 and up	N/A	N/A	33- 14814Q	NGK BPZ8HS-10	.040
V-150 DFI	USA	0G590000 and up	N/A	N/A	33-889597Q	NGK IZFR5G	.032
V-150 ProXS	USA	1B690542 and up	N/A	N/A	33-843220Q	NGK IZFR6J	.042
V-175 (175, 1750) Carb	USA	4301235 - 0G960499	33- 13686Q	NGK BU8H	33- 14103568	NGK BUZ8H	
V-175 (175, 1750) Carb	AUS	8058870 and up	33- 13686Q	NGK BU8H	33- 14103568	NGK BUZ8H	
V-175 EFI	USA	0D000750 - 0G960499	33- 13686Q	NGK BU8H	33- 14103568	NGK BUZ8H	
V-175 EFI	USA	0G960500 - 0T800999	N/A	N/A	33- 14814Q	NGK BPZ8HS-10	.040
V-175 DFI	USA	0T178500 and up	N/A	N/A	33-889597Q	NGK IZFR5G	.032
V-175 Pro XS	USA	1B516339 and up	N/A	N/A	33-843220Q	NGK IZFR6J	.042
V-200 (200, 2000) Carb	USA	4839034 - 0G960499	33- 13686Q	NGK BU8H	33- 14103568	NGK BUZ8H	
V-200 (200, 2000) Carb	AUS	8061595 - 8065672	33- 13686Q	NGK BU8H	33- 14103568	NGK BUZ8H	
V-200 (200, 2000) Carb	USA	0G960500 and up	N/A	N/A	33- 14814Q	NGK BPZ8HS-10	.040
V-200 EFI	USA	0C100861 - 0C291520	N/A	N/A	33- 14103568	NGK BUZ8H	
V-200 EFI	USA	0C291521 - 0G960499	33- 13686Q	NGK BU8H	33- 14103568	NGK BUZ8H	
V-200 EFI (2.5L)	USA	0G960500 and up	N/A	N/A	33- 14814Q	NGK BPZ8HS-10	.040
V-200 EFI (3.0L)	USA	0T750164 and up	N/A	N/A	33- 941	Champion QL77CC	.040
V-200 DFI	USA	0G386496 and up	N/A	N/A	33-889597Q	NGK IZFR5G	.032
V-200 Pro XS	USA	1B504989 and up	N/A	N/A	33-889597Q	NGK IZFR5G	.032
V-220 Laser	USA	0B117316 and up	N/A	N/A	33- 14103568	NGK BUZ8H	
V-225 (2.4L)	USA	5628028 and up	33- 13686Q	NGK BU8H	33- 14103568	NGK BUZ8H	

OUTBOARD

Model		Serial # Range	Standard Spark Plug Mercury Part Number	Standard Spark Plug Manufacturer's No.	Suppressor(resistor) Spark Plug Mecury No.	Suppressor(resistor) Spark Plug Manufacturer's No.	Gap
V-225 (3.0L)Carb	USA	0D280813 - 0G437999	N/A	N/A	33-816837Q	NGK BPZ8H-N-10	.040
V-225 (3.0L)Carb	USA	0G438000 and up	N/A	N/A	33- 941	Champion QL77CC	.035
V-225 Sea Pro & Marathon	USA	0G245605 and up	N/A	N/A	33- 941	Champion QL77CC	.035
V-225 EFI(3.0L)	USA	0G129222 and up	N/A	N/A	33- 941	Champion QL77CC	.035
V-225 DFI	USA	0G590000 and up	N/A	N/A	33-889597Q	NGK IZFR5G	.032
V-225 DFI (DTS)	USA	0G599000 and up	N/A	N/A	33-889597Q	NGK IZFR5G	.032
V-225 Pro XS	USA	1B104549 and up	N/A	N/A	33-843220Q	NGK IZFR6J	.042
V-250 (3.4L)	USA	0C101891 and up	33- 13686Q	NGK BU8H	33- 14103568	NGK BUZ8H	
V-250 EFI (3.0L)	USA	0G129222 and up	N/A	N/A	33- 941	Champion QL77CC	.035
V-250 DFI (3.0L)	USA	1B528615 and up	N/A	N/A	33-843220Q	NGK IZFR6J	.042
V-250 Pro XS	USA	1B426561 and up	N/A	N/A	33-843220Q	NGK IZFR6J	.042
V-275 (3.4L)	USA	0C101891 and up	33- 13686Q	NGK BU8H	33- 14103568	NGK BUZ8H	
V-300 (3.4L)	USA	5611648 and up	33- 13686Q	NGK BU8H	33- 14103568	NGK BUZ8H	

SPARK PLUG APPLICATION CHART - EARLY MARINER

Spark Plug Application Chart - Early Mariner

Model	SN Code	Serial # Range	Standard Spark Plug Manufacturer's P/N	Standard Spark Plug Mercury P/N	Suppressor(Resistor) Spark Plug Manufacturer's P/N	Suppressor(Resistor) Spark Plug Mercury P/N	Gap
2A (M)	646	ALL - ALL	B6HS	33- 82370M 1	BR6HS	33-813472	.024
2B (M)	6A1	000101 - 011600	B6HS	33- 82370M 1	BR6HS	33-813472	.024
2B (M)	6A1	011601 and up	B5HS	33- 84675M	BR5HS	N/A	.024
3.5 (M)	642	00000 - 23740	B7HS	33- 82371M	BR7HS	N/A	.024
3.5 (ML)	642	00000 - 41690	B7HS	33- 82371M	BR7HS	N/A	.024
3.5 (M)	642	23741 and up	B6HS	33- 82370M 1	BR6HS	33-813472	.024
3.5 (ML)	642	41691 and up	B6HS	33- 82370M 1	BR6HS	33-813472	.024
4A (M, ML)	6E0	ALL - ALL	B7HS	33- 82371M	BR7HS	N/A	.024
5A (M, ML)	661	ALL - ALL	B7HS	33- 82371M	BR7HS	N/A	.024
5C (M, ML)	6E3	ALL - ALL	B7HS	33- 82371M	BR7HS	N/A	.024
6C (M, ML)	6H8	ALL - ALL	B7HS-10	33- 41263M	BR7HS-10	N/A	.039
6D (M, ML)	6H6	ALL - ALL	B7HS-10	33- 41263M	BR7HS-10	N/A	.039
8A (M, ML)	655	ALL - ALL	B6HS	33- 82370M 1	BR6HS	33-813472	.024
8B (M, ML)	677	ALL - ALL	B7HS	33- 82371M	BR7HS	N/A	.024
W8(M, ML)	677	ALL - ALL	B7HS	33- 82371M	BR7HS	N/A	.024
8 Marathon	677	ALL - ALL	B7HS	33- 82371M	BR7HS	N/A	.024
K8 (M, ML)	680	ALL - ALL	B6HS	33- 82370M 1	BR6HS	33-813472	.024
8C (M, ML, MUL)	6G1	ALL - ALL	B7HS-10	33- 41263M	BR7HS-10	N/A	.039
9.9C (M)	682	000551 - 032885	B7HS	33- 82371M	BR7HS	N/A	.024
9.9C (ML)	682	300826 - 338410	B7HS	33- 82371M	BR7HS	N/A	.024
9.9C (E)	682	250101 - 250945	B7HS	33- 82371M	BR7HS	N/A	.024
9.9C (EL)	682	550141 - 552315	B7HS	33- 82371M	BR7HS	N/A	.024
9.9C (M)	682	032886 and up	B7HS-10	33- 41263M	BR7HS-10	N/A	.039
9.9C (ML)	682	338411 and up	B7HS-10	33- 41263M	BR7HS-10	N/A	.039
9.9C (E)	682	250946 and up	B7HS-10	33- 41263M	BR7HS-10	N/A	.039
9.9C (EL)	682	552316 and up	B7HS-10	33- 41263M	BR7HS-10	N/A	.039
15A (M, ML)	651	ALL - ALL	B7HS	33- 82371M	BR7HS	N/A	.024
15C (M)	684	000101 - 020025	B7HS	33- 82371M	BR7HS	N/A	.024
15C (ML)	684	300101 - 316415	B7HS	33- 82371M	BR7HS	N/A	.024
15C (E)	684	250101 - 251060	B7HS	33- 82371M	BR7HS	N/A	.024
15C (EL)	684	550101 - 551615	B7HS	33- 82371M	BR7HS	N/A	.024
15C (M)	684	020026 and up	B7HS-10	33- 41263M	BR7HS-10	N/A	.039
15C (ML)	684	316416 and up	B7HS-10	33- 41263M	BR7HS-10	N/A	.039

Model	SN Code	Serial # Range	Standard Spark Plug Manufacturer's P/N	Standard Spark Plug Mercury P/N	Suppressor(Resistor) Spark Plug Manufacturer's P/N	Suppressor(Resistor) Spark Plug Mercury P/N	Gap
15C (E)	684	251061 and up	B7HS-10	33- 41263M	BR7HS-10	N/A	.039
15C (EL)	684	551616 and up	B7HS-10	33- 41263M	BR7HS-10	N/A	.039
W15	662	ALL - ALL	B7HS	33- 82371M	BR7HS	N/A	.024
W15B	684	ALL - ALL	B7HS	33- 82371M	BR7HS	N/A	.024
W15(Marathon)(M,ML, MUL)	684	ALL - ALL	B7HS-10	33- 41263M	BR7HS-10	N/A	.039
K15 (M, ML)	669	ALL - ALL	B6HS	33- 82370M 1	BR6HS	33-813472	.024
K15 (M, ML)	6K4	ALL - ALL	B7HS-10	33- 41263M	BR7HS-10	N/A	.039
K15 (M, ML)	6M7	ALL - ALL	B7HS-10	33- 41263M	BR7HS-10	N/A	.039
20A (M, ML)	653	ALL - ALL	B6HS	33- 82370M 1	BR6HS	33-813472	.024
20C (M, ML, E, EL)	6A9	ALL - ALL	B7HS	33- 82371M	BR7HS	N/A	.024
25A (M, ML, E, EL)	648	ALL - ALL	B7HS	33- 82371M	BR7HS	N/A	.024
25C (M, ML, E, EL)	695	ALL - ALL	B7HS	33- 82371M	BR7HS	N/A	.024
W25 (M, ML)	648	ALL - ALL	B7HS	33- 82371M	BR7HS	N/A	.024
W25 (M, ML)	695	ALL - ALL	B7HS	33- 82371M	BR7HS	N/A	.024
W25 (Marathon)(M, ML)	694	ALL - ALL	B7HS	33- 82371M	BR7HS	N/A	.024
K25 (M, ML)	6A4	ALL - ALL	B7HS	33- 82371M	BR7HS	N/A	.024
28 (M, ML, E, EL)	664	ALL - ALL	B7HS	33- 82371M	BR7HS	N/A	.024
30A (M, ML, E, EL)	689	ALL - ALL	B7HS	33- 82371M	BR7HS	N/A	.024
W30 (Marathon)(M, ML)	689	ALL - ALL	B7HS	33- 82371M	BR7HS	N/A	.024
40A (M, ML, E, EL)	676	ALL - ALL	B8HS	33- 82372M	BR8HS	N/A	.024
40B (M, ML, E, EL)	676	ALL - ALL	B8HS	33- 82372M	BR8HS	N/A	.024
40C (M, ML, E, EL)	6E9	ALL - ALL	B8HS	33- 82372M	BR8HS	N/A	.024
W40 (M, ML)	676	ALL - ALL	B8HS	33- 82372M	BR8HS	N/A	.024
W40 (Marathon)(M, ML)	6F6	ALL - ALL	B7HS	33- 82371M	BR7HS	N/A	.024
K40 (M, ML)	6F5	ALL - ALL	B7HS	33- 82371M	BR7HS	N/A	.024
48 (M, ML)	670	ALL - ALL	B7HS	33- 82371M	BR7HS	N/A	.024
W48 (M,ML)	670 A	ALL - ALL	B7HS	33- 82371M	BR7HS	N/A	.024
55 (M, ML)	663	ALL - ALL	B8HS	33- 82372M	BR8HS	N/A	.024
55 (E)	663	00000 - 004040	B8HS	33- 82372M	BR8HS	N/A	.024
55 (EL)	663	00000 - 315378	B8HS	33- 82372M	BR8HS	N/A	.024
55 (E)	663	004041 and up	B8HS-10	N/A	BR8HS-10	33-824406 8	.039
55 (EL)	663	315379 and up	B8HS-10	N/A	BR8HS-10	33-824406 8	.039
W55 (ML)	663	ALL - ALL	B7HS	33- 82371M	BR7HS	N/A	.024
60 (E)	675	000101 - 000780	B8HS	33- 82372M	BR8HS	N/A	.024
60 (EL)	675	300101 - 302050	B8HS	33- 82372M	BR8HS	N/A	.024
60 (E)	675	000781 and up	B8HS-10	N/A	BR8HS-10	33-824406 8	.039
60 (EL)	675	302051 and up	B8HS-10	N/A	BR8HS-10	33-824406 8	.039
60 (E, EL)	6FO	ALL - ALL	B8HS-10	N/A	BR8HS-10	33-824406 8	.039

HEAVY ABRASION WATER PUMP KIT

HEAVY ABRASION RESISTANT WATER PUMP



8M0092022

Heavy duty face plate and housing designed to improve life in highly abrasive water conditions.

NEW

Fits the F60 BigFoot/Command Thrust FourStroke outboards and the F75-115 FourStroke outboards.

HIGH ENERGY IGNITION KIT

HIGH ENERGY IGNITION KIT



339- 7370A40

Provides increased ignition voltage for quicker starts and smoother idling.

Fits USA manufactured Mercury/Mariner 6 thru 15 hp. 2-cycle outboards, 1986 and Newer.

HIGH ENERGY ALTERNATOR KITS

Replace standard stators with optional ones having alternator coils of higher amperage output.

HIGH ENERGY ALTERNATOR KITS



856557A 1

Kit contains alternator and regulator/rectifier to convert from 6 amp output to 10 amp output.

Fits Mercury/Mariner 9.9 hp. FourStroke (USA 0G760300-0T979999, BEL 0P075166-0P325499) and 15 hp., 323cc. FourStroke (USA 0G590000-1B727495).

HIGH ENERGY ALTERNATOR KITS



398-852387A 6

Kit contains alternator and regulator/rectifier to convert from 6 amp output to 15 amp output.

Fits Mercury/Mariner 25 hp. Carbureted FourStroke (0G590000 and newer), 30 (3 cyl.) FourStroke (MY1999-2005) and 40 (3 cyl.) FourStroke (MY1999 & newer).

VOLTAGE REGULATOR KIT

Wires to existing rectifier on electric models with no existing regulator. Designed to regulate voltage to a 14.5 volt maximum output.

VOLTAGE REGULATOR KIT



88825A 6

Kit contains voltage regulator, wiring and mounting hardware.

Fits Mercury / Mariner 35/40 (2 cyl.), 45/50 (4 cyl.), 50/60 (3 cyl. USA 6428681-0D000749, BEL 9385911-9683054, CAN 7208333 & above), 75/80 (4 cyl.), 70/75/80/90 (3 cyl.), 100/115 (4 cyl.), In-Line Six (6 cyl.) and V-6 Outboards (except 300/3.4L).

VOLTAGE REGULATOR/RECTIFIER KIT

Replaces existing rectifier on electric models and provides DC current regulated to a maximum of 14.5 volts.

VOLTAGE REGULATOR/RECTIFIER KIT



815279A 3

Kit contains regulator/rectifier, wiring and mounting hardware.

Fits Mercury / Mariner 40 (4 cyl. 1989 & newer) and 50/60 (3 cyl. USA 0D000750-0D181999, BEL 9683055-9740999) with enclosed box type electrical plates.

LIGHTING COIL KITS

For manual starting outboards. Supplies A.C. current which requires either a regulator for lighting-only or a rectifier kit for D.C. battery charging.

LIGHTING COIL KIT



16074T05

Includes a required new flywheel assembly. Provides AC current.

Fits Mercury/Mariner F4/5/6 HP. FourStroke outboards (0R067090-0R411837).

LIGHTING COIL KIT



16837A 2

Kit contains alternator coils, screws and clamp for mounting under flywheel assembly. Provides 12 V, 60 W power.

Fits Mercury/Mariner 4/5 hp. 2 cycle outboards (MY1999 & newer), and 4/5/6 hp. FourStroke outboards (MY1999-2005).

LIGHTING COIL KIT



42282A 4

Kit contains alternator coils, screws and clamp for mounting under flywheel assembly. Provides 12 V, 60 W power.

Fits various Mercury/Mariner 6 hp. Thru 40 hp. (2 cyl.) 2 cycle outboards. See application chart for specific engine models.

LIGHTING COIL KIT



8M0056548

Includes the lighting coils and a required new flywheel assembly. Provides AC current.

NEW

Fits Mercury/Mariner 4/5/6 FourStroke outboards beginning with 0R426997. Check the application chart as all models do not require this kit.

LIGHTING REGULATORS

For use with lighting coils, these provide regulated A.C. current.

LIGHTING REGULATOR



84125T

Fits Mercury / Mariner 4/5 hp. 2 cycle, 4/5/6/8/9.9 hp. 4-Stroke, and Mariner 15/30/40 hp. (Japanese origin). See application chart for specific engine models.

HARNESS



84- 17175

LIGHTING REGULATOR KIT



95845A 5

Kit contains voltage regulator, wiring and mounting hardware.

Fits various Mercury/Mariner 6 hp. Thru 60 hp. 2 cycle outboards. See application chart for specific engine models.

LIGHTING COIL KITS CHART - MERCURY/MARINER

Mercury/Mariner Lighting Coil Kits

Model	Brand	Model Notes	Year Range		Serial # Range	Lighting Coil Kits	Lighting Only Regulators
4	Mercury/Mariner		1990 - 2016	USA	0A855097 and up	16837A 2	84125T(2)
4	Mercury/Mariner		1990 - 2016	BEL	9586000 and up	16837A 2	84125T(2)
4	Mariner	Early Japanese			6E0/6E3 Models and up	N.L.A.	84125T(2)
4 FourStroke	Mercury/Mariner		1999 - 2005	JPN	0R000001 - 0R067089	16837A 2	84125T(2)
4 FourStroke	Mercury/Mariner		1999 - 2005	BEL	0P073456 - 0P400999	16837A 2	84125T(2)
4 FourStroke	Mercury/Mariner		2006 - 2011	JPN	0R067090 - 0R411837	16074T05	N/A
4 FourStroke	Mercury/Mariner		2006 - 2011	BEL	0P401000 - 0R411837	16074T05	N/A
4 FourStroke	Mercury/Mariner		2011	JPN	0R411838 - 0R426996	N/A(1)	84125T(2)
4 FourStroke	Mercury/Mariner		2011 - 2016	JPN	0R426997 and up	8M0056548	84125T(2)
5	Mercury/Mariner		1990 - 2016	USA	0A855097 and up	16837A 2	84125T(2)
5	Mercury/Mariner		1990 - 2016	BEL	9586000 and up	16837A 2	84125T(2)
5	Mariner	Early Japanese			6E0/6E3 Models and up	N.L.A.	84125T(2)
5 FourStroke	Mercury/Mariner		1999 - 2005	JPN	0R000001 - 0R067089	16837A 2	84125T(2)
5 FourStroke	Mercury/Mariner		1999 - 2005	BEL	0P073456 - 0P400999	16837A 2	84125T(2)
5 FourStroke	Mercury/Mariner		2006 - 2011	JPN	0R067090 - 0R411837	16074T05	N/A
5 FourStroke	Mercury/Mariner		2006 - 2011	BEL	0P401000 - 0R411837	16074T05	N/A
5 FourStroke	Mercury/Mariner		2011	JPN	0R411838 - 0R426996	N/A(1)	84125T(2)
5 FourStroke	Mercury/Marine	Sailpower	2011 - 2016	JPN	0R426997 and up	N/A(1)	84125T(2)
		Non-EPA				N/A(1)	84125T(2)
		EPA Models				8M0056548	84125T(2)
6	Mercury/Mariner		1986 - 2003	USA	0A197112 - 0T800749	42282A 4	95845A 5
6	Mercury/Mariner		1986 - 2016	BEL	9461526 and up	42282A 4	95845A 5
6 FourStroke	Mercury/Mariner		1999 - 2005	JPN	0R000001 - 0R067089	16837A 2	84125T(2)
6 FourStroke	Mercury/Mariner		1999 - 2005	BEL	0P073456 - 0O400999	16837A 2	84125T(2)
6 FourStroke	Mercury/Mariner		2006 - 2011	JPN	0R067090 - 0R411837	16074T05	N/A
6 FourStroke	Mercury/Mariner		2006 - 2011	BEL	0P401000 - 0R411837	16074T05	N/A
6 FourStroke	Mercury/Mariner		2011	JPN	0R411838 - 0R426996	N/A(1)	84125T(2)
6 FourStroke	Mercury/Mariner		2011 - 2016	JPN	0R426997 and up	8M0056548	84125T(2)
8	Mercury/Mariner		1986 - 2016	USA	0A197112 and up	42282A 4	95845A 5
8	Mercury/Mariner		1986 - 2016	BEL	9461526 and up	42282A 4	95845A 5
8 FourStroke	Mercury/Mariner	232 cc. Bodensee	1995 - 1998	USA	0H000058 - 0H017099	N/A	84125T(2)
8 FourStroke	Mercury/Mariner	232 cc. Bodensee	1999 - 2000	USA	0G760300 - 0T178499	N/A(1)	84125T(2)
8 FourStroke	Mercury/Mariner	323 cc. Bodensee	2001 - 2004	BEL	0P086824 - 0P325499	N/A(1)	84125T(2)
8 FourStroke	Mercury/Mariner		2005 - 2016	USA	0R042475 and up	(3)	(3)
8 FourStroke	Mercury/Mariner		2005 - 2016	BEL	0P325500 and up	(3)	(3)
9.9	Mercury/Mariner		1986 - 2016	USA	0A197112 and up	42282A 4	95845A 5
9.9	Mercury/Mariner		1986 - 2016	BEL	9461526 and up	42282A 4	95845A 5
9.9 FourStroke	Mercury/Mariner	232 cc.	1995 - 1998	USA	0H000058 - 0H016909	N/A(1)	84125T(2)
9.9 FourStroke	Mercury/Mariner	323 cc.	1999 - 2004	USA	0T979999 and up	N/A(1)	84125T(2)
9.9 FourStroke	Mercury/Mariner	323 cc.	1999 - 2004	BEL	0P325499 and up	N/A(1)	84125T(2)
9.9 FourStroke	Mercury/Mariner		2005 - 2016	JPN	0R042475 and up	(3)	(3)
9.9 FourStroke	Mercury/Mariner		2005 - 2016	BEL	0P325500 and up	(3)	(3)
15	Mercury/Mariner		1986 - 2016	JPN	0A197112 and up	42282A 4	95845A 5
15	Mercury/Mariner		1986 - 2016	BEL	9461526 and up	42282A 4	95845A 5
15	Mariner	Early Japanese	Prior to - 1988			N.L.A.	84125T(2)

Model	Brand	Model Notes	Year Range		Serial # Range	Lighting Coil Kits	Lighting Only Regulators
15 FourStroke	Mercury/Mariner	323 cc.	1998 - 2008	USA	0G590000 and up	N/A(1)	84125T(2)
15 FourStroke	Mercury/Mariner	323 cc.	1998 - 2008	BEL	9973100 and up	N/A(1)	84125T(2)
15 FourStroke	Mercur/Mariner	351 cc.	2008 - 2016	JPN	0R235949 and up	N/A(1)	N/A(3)
18	Mercury/Mariner		1980 - 1985	USA	5837437 and up	42282A 4	95845A 5
18	Mercury/Mariner		1980 - 1983	AUS	8071973 and up	42282A 4	95845A 5
18	Mercury/Mariner		1980 - 1985	BEL	9308306 and up	42282A 4	95845A 5
18	Mercury/Mariner		1980 - 1985	CAN	7173723 and up	42282A 4	95845A 5
20	Mercury/Mariner		1986 - 2003	USA	6443973 - 0T800749	42282A 4	95845A 5
20	Mercury/Mariner		1986 - 2016	BEL	9415101 and up	42282A 4	95845A 5
20	Mercury/Mariner		1986 - 2003	CAN	7209533 and up	42282A 4	95845A 5
20 FourStroke	Mercury/Mariner		2008 - 2016	JPN	0R235168 and up	N/A(1)	N/A(3)
25	Mercury/Mariner		1980 - 2016	USA	5837437 and up	42282A 4	95845A 5
25	Mercury/Mariner		1980 - 2016	AUS	8071973 and up	42282A 4	95845A 5
25	Mercury/Mariner		1980 - 2016	BEL	9308306 and up	42282A 4	95845A 5
25	Mercury/Mariner		1980 - 2016	CAN	7173723 and up	42282A 4	95845A 5
25 FourStroke	Mercury/Mariner	Carb model only	1998 - 2006	USA	0G590000 and up	(3)	(3)
25 FourStroke	Mercury/Mariner	Carb model only	1998 - 2006	BEL	9973100 and up	(3)	(3)
30	Mariner	2 cylinder, Early Japanese				N.L.A.	84125T(2)
30	Mercury/Mariner	2 cylinder, 644 cc.	1994 - 2002	USA	0G053314 - 0T598999	N/A(1)	95845A 5
30	Mercury/Mariner	2 cylinder, 644 cc.	1994 - 2002	BEL	9854537 - 0P206999	N/A(1)	95845A 5
35	Mercury/Mariner	2 cylinder	1984 - 2016	USA	6445653 and up	42282A 4	95845A 5
35	Mercury/Mariner	2 cylinder	1984 - 2016	BEL	9384476 and up	42282A 4	95845A 5
35	Mercury/Mariner	2 cylinder	1984 - 2016	CAN	7209608 and up	42282A 4	95845A 5
40	Mariner	2 cylinder, Early Japanese				N.L.A.	84125T(2)
40	Mercury/Mariner	2 cylinder	1980 - 1984	USA	5823918 - 0G053313	42282A 4	95845A 5
40	Mercury/Mariner	2 cylinder	1980 - 1984	AUS	8070640 and up	42282A 4	95845A 5
40	Mercury/Mariner	2 cylinder	1980 - 1984	BEL	9298955 - 9854536	42282A 4	95845A 5
40	Mercury/Mariner	2 cylinder	1980 - 1984	CAN	7169338 and up	42282A 4	95845A 5
40	Mercury/Mariner	2 cylinder, 644 cc.	1994 - 2003	USA	0G053314 - 0T800749	N/A(1)	95845A 5
40	Mercury/Mariner	2 cylinder, 644 cc.	1994 - 2003	BEL	9854537 - 0P267999	N/A(1)	95845A 5
40	Mercury/Mariner	3 cylinder	1997 - 2016	USA	0G531301 and up	N/A(1)	95845A 5
40	Mercury/Mariner	3 cylinder	1997 - 2016	BEL	9973100 and up	N/A(1)	95845A 5
40	Mercury/Mariner	4 cylinder	1989 - 1997	USA	0C159200 and up	N.L.A.	95845A 5
40	Mercury/Mariner	4 cylinder	1989 - 1997	BEL	9570790 and up	N.L.A.	95845A 5
45	Mercury/Mariner	4 cylinder	1986 - 1989	USA	0A914859 and up	N.L.A.	95845A 5
45	Mercury/Mariner	4 cylinder	1986 - 1989	AUS	8063985 and up	N.L.A.	95845A 5
45	Mercury/Mariner	4 cylinder	1986 - 1989	BEL	9248006 and up	N.L.A.	95845A 5
45	Mercury/Mariner	4 cylinder	1986 - 1989	CAN	0A709616 and up	N.L.A.	95845A 5
50	Mercury/Mariner	4 cylinder	1980 - 1985	USA	5531630 - 0A914858	N.L.A.	95845A 5
50	Mercury/Mariner	4 cylinder	1980 - 1985	AUS	8063985 - 8063984	N.L.A.	95845A 5
50	Mercury/Mariner	4 cylinder	1980 - 1985	BEL	9248006 - 9248005	N.L.A.	95845A 5
50	Mercury/Mariner	4 cylinder	1980 - 1985	CAN	7143688 - 0A709615	N.L.A.	95845A 5
55	Mercury/Mariner	51.8 CID	1996 - 1997	USA	0D000750 - 0G589999	N/A(1)	95845A 5
55	Mercury/Mariner	51.8 CID	1996 - 1997	BEL	9741042 - 9973099	N/A(1)	95845A 5
55	Mercury/Mariner	59 CID	1998 - 2016	USA	0G590000 and up	N/A(1)	95845A 5
55	Mercury/Mariner	59 CID	1998 - 2016	BEL	9973100 and up	N/A(1)	95845A 5
60	Mercury/Mariner	59 CID	1998 - 2016	USA	0G590000 and up	N/A(1)	95845A 5
60	Mercury/Mariner	59 CID	1998 - 2016	BEL	9973100 and up	N/A(1)	95845A 5

(1) Lighting coils are already a part of the stator assembly and not required as a separate kit.

(2) Harness 84-17175 required to complete assembly.

(3) No kit available for this model.

BATTERY CHARGING KIT

For use with lighting coils, these provide D.C. current for recharging a 12 volt battery.

BATTERY CHARGING KIT



16838A 4

Kit contains voltage rectifier, wiring and mounting hardware.

Fits Mercury/Mariner 4/5 hp. 2 cycle and FourStroke outboards. See chart for specific engine models.

BATTERY CHARGING KIT



83-8M0060278

Kit contains voltage rectifier and fused wiring.

Fits older Mariner Models 4A, 5C, 8B, 8K, 9.9C, 15C, 20C, 25C, K25, 28, K40, 40 twin, and various Marathon models (all of Japanese origin). Please use the Electronic Parts Catalog to identify the correct model usage.

BATTERY CHARGING KIT



62351A10

Kit contains voltage rectifier, wiring and mounting hardware.

Fits various Mercury/Mariner 6 hp. thru 60 hp. 2 cycle outboards. See application chart for specific engine models.

BATTERY CHARGING KIT



83- 70350A 2

Kit contains voltage rectifier and wiring. Also requires additional harness from lighting coil to rectifier.

Fits Mariner 15/30/40 hp. (2 cyl.) 2 cycle outboards of Japanese origin. See application chart for specific engine models.

BATTERY CHARGING KIT



828038A 1

Kit contains voltage rectifier, wiring and mounting hardware.

Fits Mercury/Mariner 9.9 hp. FourStroke, 1995 - 1998, and 8 hp. FourStroke (Bodensee) engines 1995-2000.

BATTERY CHARGING KIT



895299A02

A kit designed to provide 6 amp battery charging capability at wide open throttle to a manual start outboard.

Fits the 8/9.9 hp. FourStroke, Model Year 2005 and newer, both standard and BigFoot models.

BATTERY CHARGING KIT



895299A03

Allows manual start models to provide a 12 amp charge to a 12 volt battery at wide open throttle.

Fits the 15/20 Hp. FourStroke (351cc) outboard, serial number 0R235168 and above.

BATTERY CHARGING KIT



898103A90

Allows manual start models to charge 15 amps to a 12 volt battery at wide open throttle.

Fits the 25-30 Hp EFI FourStroke outboard, serial number 0R106999 & above.

BATTERY CHARGING KIT



8M0056549

Kit contains volatge rectifier, wiring and mounting hardware. Used for providing a 4 amp DC charge to a 12 volt battery at wide open throttle. NEW

Fits Mercury/Mariner 4/5/6hp. FourStroke outboards beginning with serial number 0R411838. Some models may require lighting coils be added. See application chart for specific models.

HARNESS ASSEMBLY

Used to complete a battery charging kit application.

HARNESS ASSEMBLY



84- 86939A 2

Fits Mariner 15/30/40 hp. (2 cyl.) 2 cycle outboards of Japanese origin. See application chart for specific engine models.

HARNESS ASSEMBLY



856558A 2

Connects to existing voltage regulator/rectifier. Manual motors within the serial groups listed below have standard 6 amp charging and electric models are 10 amp standard.

Fits Mercury/Mariner 8 hp. FourStroke (BEL 0P086824-0P325499), 9.9 hp. FourStroke (USA 0G760300-0T979999) and 15 hp., 323cc. FourStroke (USA 0G590000-1B727495).

BATTERY CHARGING KITS CHART - MERCURY/MARINER

Mercury/Mariner Battery Charging Kits

Model	Brand	Model Notes	Year Range	Country	Serial # Range	Lighting Coil Kits	Charging Rectifier Kits	Extra Required Harness
4	Mercury/Mariner		1990 - 2016	USA	0A855097 and up	16837A 2	16838A 4	N/A
4	Mercury/Mariner		1990 - 2016	BEL	9586000 and up	16837A 2	16838A 4	N/A
4	Mariner	Early Japanese			6E0/6E3 Models and up	N.L.A.	83-8M0060278	N/A
4 FourStroke	Mercury/Mariner		1999 - 2005	JPN	0R000001 - 0R067089	16837A 2	16838A 4	N/A
4 FourStroke	Mercury/Mariner		1999 - 2005	BEL	0P073456 - 0P400999	16837A 2	16838A 4	N/A
4 FourStroke	Mercury/Mariner		2006 - 2011	JPN	0R067090 - 0R411837	16074T05	16838A 4	N/A
4 FourStroke	Mercury/Mariner		2006 - 2011	BEL	0P401000 - 0R411837	16074T05	16838A 4	N/A
4 FourStroke	Mercury/Mariner		2011	JPN	0R411838 - 0R426996	N/A(1)	8M0056549	N/A
4 FourStroke	Mercury/Mariner		2011 - 2016	JPN	0R426997 and up	8M0056548	8M0056549	N/A
5	Mercury/Mariner		1990 - 2016	USA	0A855097 and up	16837A 2	16838A 4	N/A
5	Mercury/Mariner		1990 - 2016	BEL	9586000 and up	16837A 2	16838A 4	N/A
5	Mariner	Early Japanese			6E0/6E3 Models and up	N.L.A.	83-8M0060278	N/A
5 FourStroke	Mercury/Mariner		1999 - 2005	JPN	0R000001 - 0R067089	16837A 2	16838A 4	N/A
5 FourStroke	Mercury/Mariner		1999 - 2005	BEL	0P073456 - 0P400999	16837A 2	16838A 4	N/A
5 FourStroke	Mercury/Mariner		2006 - 2011	JPN	0R067090 - 0R411837	16074T05	16838A 4	N/A
5 FourStroke	Mercury/Mariner		2006 - 2011	BEL	0P401000 - 0R411837	16074T05	16838A 4	N/A
5 FourStroke	Mercury/Mariner		2011	JPN	0R411838 - 0R426996	N/A(1)	8M0056549	N/A
5 FourStroke	Mercury/Mariner	Sailpower	2011 - 2016	JPN	0R426997 and up	N/A(1)	8M0056549	N/A
		ML model, non-EPA				N/A(1)	8M0056549	N/A
		EPA and all other models				8M0056548	8M0056549	N/A
6	Mercury/Mariner		1986 - 2003	USA	0A197112 - 0T800749	42282A 4	62351A10	N/A
6	Mercury/Mariner		1986 - 2016	BEL	9461526 and up	42282A 4	62351A10	N/A
6 FourStroke	Mercury/Mariner		1999 - 2005	JPN	0R000001 - 0R067089	16837A 2	16838A 4	N/A
6 FourStroke	Mercury/Mariner		1999 - 2005	BEL	0P073456 - 0P400999	16837A 2	16838A 4	N/A
6 FourStroke	Mercury/Mariner		2006 - 2011	JPN	0R067090 - 0R411837	16074T05	16838A 4	N/A
6 FourStroke	Mercury/Mariner		2006 - 2011	BEL	0P401000 - 0R411837	16074T05	16838A 4	N/A
6 FourStroke	Mercury/Mariner		2011	JPN	0R411838 - 0R426996	N/A(1)	8M0056549	N/A
6 FourStroke	Mercury/Mariner		2011 - 2016	JPN	0R426997 and up	8M0056548	8M0056549	N/A
8	Mercury/Mariner		1986 - 2016	USA	0A197112 and up	42282A 4	62351A10	N/A
8	Mercury/Mariner		1986 - 2016	BEL	9461526 and up	42282A 4	62351A10	N/A
8 FourStroke	Mercury/Mariner	232 cc. Bodensee	1995 - 1998	USA	0H000058 - 0H017099	N/A	828038A 1	N/A
8 FourStroke	Mercury/Mariner	232 cc. Bodensee	1999 - 2000	USA	0G760300 - 0T178499	N/A(1)	828038A 1	N/A
8 FourStroke	Mercury/Mariner	323 cc. Bodensee	2001 - 2004	BEL	0P086824 - 0P325499	N/A(1)	N/A(2)	856558A 2
8 FourStroke	Mercury/Mariner	209 cc.	2005 - 2016	JPN	0R042575 and up	N/A(4)	895299A02	N/A
8 FourStroke	Mercury/Mariner		2005 - 2016	BEL	0P325500 and up	N/A(4)	895299A02	N/A
9.9	Mercury/Mariner		1986 - 2016	USA	0A197112 and up	42282A 4	62351A10	N/A
9.9	Mercury/Mariner		1986 - 2016	BEL	9461526 and up	42282A 4	62351A10	N/A
9.9 FourStroke	Mercury/Mariner	232 cc.	1995 - 1998	USA	0H000058 - 0H016909	N/A(1)	828038A 1	N/A
9.9 FourStroke	Mercury/Mariner	323 cc.	1999 - 2004	USA	0G760300 - 0T979999	N/A(1)	N/A(2)	856558A 2
9.9 FourStroke	Mercury/Mariner	323 cc.	1999 - 2004	BEL	0P075166 - 0P325499	N/A(1)	N/A(2)	856558A 2
9.9 FourStroke	Mercury/Mariner	209 cc.	2005 - 2016	JPN	0R042475 and up	N/A(4)	895299A02	N/A
9.9 FourStroke	Mercury/Mariner		2005 - 2016	BEL	0P325500 and up	N/A(4)	895299A02	N/A
15	Mercury/Mariner		1986 - 2016	USA	0A197112 and up	42282A 4	62351A10	N/A
15	Mercury/Mariner		1986 - 2016	BEL	9461526 and up	42282A 4	62351A10	N/A
15	Mariner	Early Japanese	Prior to - 1988			N.L.A.	83- 70350A 2	84- 86939A 2

Model	Brand	Model Notes	Year Range	Country	Serial # Range	Lighting Coil Kits	Charging Rectifier Kits	Extra Required Harness
15 FourStroke	Mercury/Mariner	323 cc.	1998 - 2008	USA	0G590000 and up	N/A(1)	N/A(2)	856558A 2
15 FourStroke	Mercury/Mariner	323 cc.	1998 - 2008	BEL	9973100 and up	N/A(1)	N/A(2)	856558A 2
15 FourStroke	Mercury/Mariner	351 cc.	2008 - 2016	JPN	0R235949 and up	N/A	895299A03	N/A
18	Mercury/Mariner		1980 - 1985	USA	5837437 and up	42282A 4	62351A10	N/A
18	Mercury/Mariner		1980 - 1983	AUS	8071973 and up	42282A 4	62351A10	N/A
18	Mercury/Mariner		1980 - 1985	BEL	9308306 and up	42282A 4	62351A10	N/A
18	Mercury/Mariner		1980 - 1985	CAN	7173723 and up	42282A 4	62351A10	N/A
20	Mercury/Mariner		1986 - 2003	USA	6443973 - 0T800749	42282A 4	62351A10	N/A
20	Mercury/Mariner		1986 - 2016	BEL	9415101 and up	42282A 4	62351A10	N/A
20	Mercury/Mariner		1986 - 2003	CAN	7209533 and up	42282A 4	62351A10	N/A
20 FourStroke	Mercury/Mariner	351 cc.	2008 - 2016	JPN	0R235168 and up	N/A	895299A03	N/A
25	Mercury/Mariner		1980 - 2016	USA	5837437 and up	42282A 4	62351A10	N/A
25	Mercury/Mariner		1980 - 2016	AUS	8071973 and up	42282A 4	62351A10	N/A
25	Mercury/Mariner		1980 - 2016	BEL	9308306 and up	42282A 4	62351A10	N/A
25	Mercury/Mariner		1980 - 2016	CAN	7173723 and up	42282A 4	62351A10	N/A
25 FourStroke	Mercury/Mariner	Carb models	1998 - 2006	USA	0G590000 and up	(3)	(3)	N/A
25 FourStroke	Mercury/Mariner	Carn models	1998 - 2006	BEL	9973100 and up	(3)	(3)	N/A
25 FourStroke	Mercury/Mariner	EFI models	2006 - 2016	JPN	0R106999 and up	(4)	898103A90	N/A
25 FourStroke	Mercury/Mariner	EFI models	2006 - 2016	BEL	0P401000 and up	(4)	898103A90	N/A
30	Mariner	2 cylinder, Early Japanese				N.L.A.	83- 70350A 2	84- 86939A 2
30	Mercury/Mariner	2 cylinder, 644 cc.	1994 - 2002	USA	0G053314 - 0T598999	N/A(1)	62351A10	N/A
30	Mercury/Mariner	2 cylinder, 644 cc.	1994 - 2002	BEL	9854537 - 0P206999	N/A(1)	62351A10	N/A
30 FourStroke	Mercury/Mariner	EFI models	2006 - 2016	JPN	0R106999 and up	(4)	898103A90	N/A
30 FourStroke	Mercury/Mariner	EFI models	2006 - 2016	BEL	0P401000 and up	(4)	898103A90	N/A
35	Mercury/Mariner	2 cylinder	1984 - 2016	USA	6445653 and up	42282A 4	62351A10	N/A
35	Mercury/Mariner	2 cylinder	1984 - 2016	BEL	9384476 and up	42282A 4	62351A10	N/A
35	Mercury/Mariner	2 cylinder	1984 - 2016	CAN	7209608 and up	42282A 4	62351A10	N/A
40	Mariner	2 cylinder, Early Japanese				N.L.A.	83- 70350A 2	84- 86939A 2
40	Mercury/Mariner	2 cylinder	1980 - 1984	USA	5823918 - 0G053313	42282A 4	62351A10	N/A
40	Mercury/Mariner	2 cylinder	1980 - 1984	AUS	8070640 and up	42282A 4	62351A10	N/A
40	Mercury/Mariner	2 cylinder	1980 - 1984	BEL	9298955 - 9854536	42282A 4	62351A10	N/A
40	Mercury/Mariner	2 cylinder	1980 - 1984	CAN	7169338 and up	42282A 4	62351A10	N/A
40	Mercury/Mariner	2 cylinder, 644 cc.	1994 - 2003	USA	0G053314 - 0T800749	N/A(1)	62351A10	N/A
40	Mercury/Mariner	2 cylinder, 644 cc.	1994 - 2003	BEL	9854537 - 0P267999	N/A(1)	62351A10	N/A
40	Mercury/Mariner	3 cylinder	1997 - 2016	USA	0G531301 and up	N/A(1)	62351A10	N/A
40	Mercury/Mariner	3 cylinder	1997 - 2016	BEL	9973100 and up	N/A(1)	62351A10	N/A
40	Mercury/Mariner	4 cylinder	1989 - 1997	USA	0C159200 and up	N.L.A.	62351A10	N/A
40	Mercury/Mariner	4 cylinder	1989 - 1997	BEL	9570790 and up	N.L.A.	62351A10	N/A
45	Mercury/Mariner	4 cylinder	1986 - 1989	USA	0A914859 and up	N.L.A.	62351A10	N/A
45	Mercury/Mariner	4 cylinder	1986 - 1989	AUS	8063985 and up	N.L.A.	62351A10	N/A
45	Mercury/Mariner	4 cylinder	1986 - 1989	BEL	9248006 and up	N.L.A.	62351A10	N/A
45	Mercury/Mariner	4 cylinder	1986 - 1989	CAN	0A709616 and up	N.L.A.	62351A10	N/A
50	Mercury/Mariner	4 cylinder	1980 - 1985	USA	5531630 - 0A914858	N.L.A.	62351A10	N/A
50	Mercury/Mariner	4 cylinder	1980 - 1985	AUS	8063985 - 8063984	N.L.A.	62351A10	N/A
50	Mercury/Mariner	4 cylinder	1980 - 1985	BEL	9248006 - 9248005	N.L.A.	62351A10	N/A
50	Mercury/Mariner	4 cylinder	1980 - 1985	CAN	7143688 - 0A709615	N.L.A.	62351A10	N/A
55	Mercury/Mariner	51.8 CID	1996 - 1997	USA	0D000750 - 0G589999	N/A(1)	62351A10	N/A
55	Mercury/Mariner	51.8 CID	1996 - 1997	BEL	9741042 - 9973099	N/A(1)	62351A10	N/A
55	Mercury/Mariner	59 CID	1998 - 2016	USA	0G590000 and up	N/A(1)	62351A10	N/A
55	Mercury/Mariner	59 CID	1998 - 2016	BEL	9973100 and up	N/A(1)	62351A10	N/A
60	Mercury/Mariner	59 CID	1998 - 2016	USA	0G590000 and up	N/A(1)	62351A10	N/A

OUTBOARD

Model	Brand	Model Notes	Year Range	Country	Serial # Range	Lighting Coil Kits	Charging Rectifier Kits	Extra Required Harness
60	Mercury/Mariner	59 CID	1998 - 2016	BEL	9973100 and up	N/A(1)	62351A10	N/A

(1) Lighting coils are already a part of the stator assembly and not required as a separate kit.

(2) Charging rectifier already present on outboard and not required to be added.

(3) Kits are not available for this model.

(4) Lighting coils are included in the battery charging kit.

POWER TRIM KIT

These kits are designed to add power trim to motors not equipped with power trim at time of manufacture. Remote operation of any power trim requires the use of a power trim control panel or a trim type remote control if not already so equipped.

POWER TRIM KIT



850700A07

Kit includes cylinder to provide a maximum of 56 degrees of tilt. Trim controls are not included.

Fits various Mercury/Mariner 6 thru 15 hp. 2 cycle and some 8/9.9 hp. 4-Stroke outboards. See application chart for specific engine models.

POWER TRIM KIT



850700A08

Kit includes cylinder to provide a maximum of 56 degrees of tilt. Trim controls are not included.

Fits various Mercury/Mariner 20/25 hp. 2 cycle, some 8/9.9 hp. 4-Stroke, and 15 hp. 4-Stroke outboards. See application chart for specific engine models.

POWER TRIM KIT



822344A11

Single ram integral trim with cowl mounted trim switch.

Fits Mercury/Mariner 30/40 hp. 2 cycle outboards, 1995 thru 1996 1/2. See application chart for specific engine models.

POWER TRIM KIT



822344A13

Single ram integral trim with cowl mounted trim switch.

Fits various Mercury/Mariner 25/40/45/50 hp. 4-Stroke, 30/40 2 cycle, 30 JET and 40/50 (3 cyl.) 2 cycle outboards. See application chart for specific engine models.

POWER TRIM KIT



8M0055001

Single ram integral trim with cowl mounted trim switch.

Fits various Mercury/Mariner 30 thru 50 hp. 4-Stroke and 55/60 (3 cyl,) 2 cycle outboards. See application chart for specific engine models.

POWER TRIM KIT



8M0055002

Single ram integral trim with cowl mounted trim switch.

Fits Mercury/Mariner 30/40 hp. (3 cyl.) 4-Stroke outboards with standard gearcase, USA serial number 0T294065-1B226999 and BEL serial number 0P094500-0P400999. See application chart for specific engine models.

POWER TRIM KIT



8M0055003

Single ram integral trim with cowl mounted trim switch.

Fits Mercury/Mariner 40 hp. (3 cyl.) FourStroke EFI outboards beginning with Model Year 2006. See application chart for specific engine models.

POWER TRIM KIT



8M0054999

Single ram integral trim with cowl mounted trim switch.

Fits Mercury/Mariner 45 hp. FourStroke(1999-2000), 45 JET(1993-1997) and 50/60 hp. (3 cylinder, 1993-1997) 2 cycle outboards. See application chart for specific engine models.

POWER TRIM KIT



8M0055000

Single ram integral trim with cowl mounted trim switch.

Fits various Mercury/Mariner 30 JET (4 cyl.) and 40 hp. (4 cyl.) 2 cycle outboards. See application chart for specific engine models.

POWER TRIM KIT



8M0055008

Single ram integral trim with cowl mounted trim switch.

Fits Mercury/Mariner 40 hp. (3 cyl.) 4-Stroke Bigfoot, 40 hp. (4 cyl., 996 cc.) 4-Stroke Bigfoot, 50/60 hp. (4 cyl., 996 cc.) 4-Stroke, and 60 (3 cyl.) 2 cycle Bigfoot outboards. See application chart for specific engine models.

POWER TRIM KIT



855654A 6

Single ram integral trim with cowl mounted trim switch.

Fits Mercury/Mariner 30/40 hp. (3 cyl.) 4-Stroke outboards with Bigfoot gearcase beginning with serial number 0T294065-1B226999. See application chart for specific engine models.

POWER TRIM KIT



826729A10

Three ram integral power trim.

Fits Mercury/Mariner 70/75/80/90 hp. (3 cyl.) 2 cycle outboards, 1987 thru 1997 1/2 and 75 hp. (4 cyl.) 2 cycle, 1984 thru 1987. See application chart for specific engine models.

POWER TRIM & TILT KIT



822344A12

Fits Force 40/50 hp. outboards (USA 0E093700 and Newer).

POWER TRIM & TILT KIT



8M0090334

Fits Force 90/120 hp. outboards (USA 0E093700-0E173408).

OUTBOARD

POWER TRIM SWITCH KIT

Operates the power trim kit added to an electric model.

POWER TRIM SWITCH KIT



87- 14645A 4

Toggle switch style. Tiller handle mounted.

Fits Mercury/Mariner 40 JET and 50/60 hp. outboards and operates the power trim kit added to a base ELHO model engine. See Tiller application chart for specific engine models.

POWER TRIM SWITCH KIT



87- 18286A18

Rocker style switch with 10 ft. harness and bullet connectors. Can be surface mounted or flush mounted. Provides tilt control from the bow or transom location.

Fits Mercury/Mariner models equipped with integral trim pump.

POWER TRIM SWITCH KIT



87-8M0042301

Rocker switch style with bullet connectors. Cowl mounted. Connects directly to engine harness.

Fits Force 40-120 hp. Outboards.

REMOTE MOUNTED POWER TRIM ACCESSORIES

These accessories can be used with applications requiring the installation of the remote mounted style power trim pump.

POWER TRIM PUMP MOUNTING BRACKET



862548A 1

Allows mounting to floor or transom. Includes lag bolts and washers.

Fits various Mercury / Mariner applications requiring a remote style power trim pump.

POWER TRIM CHART - MERCURY/MARINER FOURSTROKE

THESE ARE NOT REPLACEMENT POWER TRIMS. These kits are add-on power trim kits designed for addition to outboard engines that were not furnished a power trim at time of manufacture.

FourStroke Outboard Power Trim Kit Chart

Model	Model Notes	Year Range	Country	Serial # Range	Power Trim Kit Part Number	Port Mount Analog Trim Sender	Starboard Mount Analog Trim Sender
8 FourStroke	232 cc.	1995 - 1998	USA	0H000058 - 0H017349	850700A07	N/A	N/A
8 FourStroke	232 cc.	1999 - 2000	USA	0G760300 - 0T178499	850700A07	N/A	N/A
8 FourStroke	323 cc.	2001 - 2004	BEL	0P086824 - 0P325499	850700A08	N/A	N/A
8 FourStroke	209 cc.	2005 - 2016	JPN	0R042475 and up	850700A07	N/A	N/A
8 FourStroke	209 cc.	2005 - 2016	BEL	0P325500 and up	850700A07	N/A	N/A
9.9 FourStroke	232 cc.	1995 - 1998	USA	0H000058 - 0H016909	850700A07	N/A	N/A
9.9 FourStroke	323 cc. w/Standard Gearcase	1999 - 2004	USA	0G760300 - 0T979999	850700A08	N/A	N/A
9.9 FourStroke	323 cc. w/Standard Gearcase	1999 - 2004	BEL	0P075166 - 0P325499	850700A08	N/A	N/A
9.9 FourStroke	323 cc. w/BigFoot Gearcase	1999 - 2004	USA	0G760300 - 0T979999	850700A08	N/A	N/A
9.9 FourStroke	323 cc. w/BigFoot Gearcase	1999 - 2004	BEL	0P075166 - 0P325499	850700A08	N/A	N/A
9.9 FourStroke	Standard Gearcase	2005 - 2016	JPN	0R042475 and up	850700A07	N/A	N/A
9.9 FourStroke	Standard Gearcase	2005 - 2016	BEL	0P325500 and up	850700A07	N/A	N/A
9.9 FourStroke	BigFoot (Manual Models)	2005 - 2016	JPN	0R052328 and up	N/A	N/A	N/A
9.9 FourStroke	BigFoot (Manual Models)	2005 - 2016	BEL	0P325500 and up	N/A	N/A	N/A

Model	Model Notes	Year Range	Country	Serial # Range	Power Trim Kit Part Number	Port Mount Analog Trim Sender	Starboard Mount Analog Trim Sender
9.9 FourStroke	BigFoot (Electric Models)	2005 - 2016	JPN	0R052328 and up	N/A(3)	N/A	N/A
9.9 FourStroke	BigFoot (Electric Models)	2005 - 2016	BEL	0P325500 and up	N/A(3)	N/A	N/A
15 FourStroke	323 cc. w/Standard Gearcase	1998 - 2008	USA	0G590000 and up	850700A08	N/A	N/A
15 FourStroke	323 cc. w/BigFoot Gearcase	1998 - 2008	USA	0G590000 and up	850700A08	N/A	N/A
15 FourStroke	351 cc.	2008 - 2016	JPN	0R235949 and up	N/A(2)	N/A	N/A
20 FourStroke	351 cc.	2008 - 2016	JPN	0R235168 and up	N/A(2)	N/A	N/A
25 FourStroke	Carb Model w/Standard Gearcase	1998 - 2006	USA	0G590000 and up	822344A13	822573A12	N/A
25 FourStroke	Carb Model w/Standard Gearcase	1998 - 2006	BEL	9973100 and up	822344A13	822573A12	N/A
25 FourStroke	BigFoot Gearcase	1998 - 2005	USA	0G590000 - 1B226999	822344A13	822573A12	N/A
25 FourStroke	BigFoot Gearcase	1998 - 2005	BEL	9973100 - 0P400999	822344A13	822573A12	N/A
25 FourStroke	EFI Models	2006 - 2016	JPN	0R106999 and up	N/A(2)	822573A12	N/A
25 FourStroke	EFI Models	2006 - 2016	BEL	0P401000 and up	N/A(2)	822573A12	N/A
30 FourStroke	3 cylinder. Standard Gearcase	1999 - 2001	USA	0G760300 - 0T294064	8M0055001	N/A	8M0074845
30 FourStroke	3 cylinder. Standard Gearcase	1999 - 2001	BEL	0P017000 - 0P153499	8M0055001	N/A	8M0074845
30 FourStroke	3 cylinder. Standard Gearcase	2001 - 2005	USA	0T294065 - 1B226999	8M0055002	N/A	8M0074845
30 FourStroke	3 cylinder. Standard Gearcase	2001 - 2005	BEL	0P153500 - 0P400999	8M0055002	N/A	8M0074845
30 FourStroke	EFI Models	2006 - 2016	JPN	0R106999 and up	N/A(2)	822573A12	N/A
30 FourStroke	EFI Models	2006 - 2016	BEL	0P401000 and up	N/A(2)	822573A12	N/A
40 FourStroke	3 cylinder. Standard Gearcase	1999 - 2001	USA	0G760300 - 0T294064	8M0055001	N/A	8M0074845
40 FourStroke	3 cylinder. Standard Gearcase	1999 - 2001	BEL	017000 - 0P153499	8M0055001	N/A	8M0074845
40 FourStroke	3 cylinder. BigFoot Gearcase	1999 - 2001	USA	0G760300 - 0T294064	8M0055008	N/A	8M0074845
40 FourStroke	3 cylinder. BigFoot Gearcase	1999 - 2001	BEL	0P017000 - 0P094499	8M0055008	N/A	8M0074845
40 FourStroke	3 cylinder. Standard Gearcase	2001 - 2005	USA	0T294065 - 1B226999	8M0055002	N/A	8M0074845
40 FourStroke	3 cylinder. Standard Gearcase	2001 - 2005	BEL	0P094500 - 0P400999	8M0055002	N/A	8M0074845
40 FourStroke	3 cylinder. EFI	2006	USA	1B227000 - 1B344398	8M0055003	N/A	8M0074845
40 FourStroke	3 cylinder. EFI	2006	BEL	0P401000 - 0P515896	8M0055003	N/A	8M0074845
40 FourStroke	3 cylinder. EFI	2006	CHN	1C000001 - 1C049738	8M0055003	N/A	8M0074845
40 FourStroke	3 cylinder EFI	2007 - 2016	CHN	1C049739 and up	8M0055003	N/A	8M0074845
40 FourStroke	3 cylinder. BigFoot Gearcase	2001	USA	0T294065 - 0T408999	855654A 6	N/A	8M0074845
40 FourStroke	3 cylinder. BigFoot Gearcase	2001	BEL	0P094500 - 0P153499	855654A 6	N/A	8M0074845
40 FourStroke	4 cylinder. Standard Gearcase	1995 - 1998	USA	0G231123 - 0G760299	822344A13	822573A12	N/A
40 FourStroke	4 cylinder. Standard Gearcase	1999 - 2000	BEL	0P073323 - 0P094499	8M0055001	N/A	8M0074845
40 FourStroke	4 cylinder. 996 cc. BigFoot	2001 - 2006	USA	0T178500 - 1B344306	8M0055008	N/A	8M0074845
40 FourStroke	4 cylinder. 996 cc. BigFoot	2001 - 2006	BEL	0P094500 - 0P515896	8M0055008	N/A	8M0074845
40 FourStroke	4 cylinder. 996 cc. BigFoot	2006	CHN	1C000001 - 1C050251	8M0055008	N/A	8M0074845
40 FourStroke	4 cylinder. 996 cc. BigFoot	2007 - 2016	CHN	1C050252 and up	N/A(4)	N/A	8M0074845
45 FourStroke	4 cylinder. Standard Gearcase	1995 - 1998	USA	0G231123 - 0G760299	822344A13	822573A12	N/A
45 FourStroke	4 cylinder. Standard Gearcase	1995 - 1998	BEL	9944807 - 0P016999	822344A13	822573A12	N/A
45 FourStroke	4 cylinder. Standard Gearcase	1999 - 2000	USA	0G076300 - 0T178499	822344A13	822573A12	N/A
45 FourStroke	4 cylinder. Standard Gearcase	1999 - 2000	BEL	0P017000 - 0P094499	822344A13	822573A12	N/A
45 FourStroke	4 cylinder. BigFoot Gearcase	1999 - 2000	USA	0G076300 - 0T178499	8M0055001	N/A	8M0074845
45 FourStroke	4 cylinder. BigFoot Gearcase	1999 - 2000	BEL	0P017000 - 0P094499	8M0055001	N/A	8M0074845
50 FourStroke	4 cylinder. Standard Gearcase	1995 - 1998	USA	0G231123 - 0G760299	822344A13	822573A12	N/A
50 FourStroke	4 cylinder. Standard Gearcase	1995 - 1998	BEL	9944807 - 0P016999	822344A13	822573A12	N/A
50 FourStroke	4 cylinder. Standard Gearcase	1999 - 2000	USA	0G076300 - 0T178499	8M0055001	N/A	8M0074845
50 FourStroke	4 cylinder. Standard Gearcase	1999 - 2000	BEL	0P017000 - 0P094499	8M0055001	N/A	8M0074845
50 FourStroke	4 cylinder. BigFoot Gearcase	1998 - 2000	USA	0G590000 - 0T178499	8M0055008	N/A	8M0074845
50 FourStroke	4 cylinder. 996 cc. Standard	2001 - 2006	USA	0T178500 - 1B344306	8M0055008	N/A	8M0074845
50 FourStroke	4 cylinder. 996 cc. Standard	2001 - 2006	BEL	0P094500 - 0P515896	8M0055008	N/A	8M0074845
50 FourStroke	4 cylinder. 996 cc. Standard	2006	CHN	0C000001 - 0C050251	8M0055008	N/A	8M0074845
50 FourStroke	4 cylinder. 996 cc. Standard	2007 - 2016	CHN	0C0500252 and up	N/A(4)	N/A	8M0074845
50 FourStroke	4 cylinder. 996 cc. BigFoot	2001 - 2006	USA	0T178500 - 1B344306	8M0055008	N/A	8M0074845
50 FourStroke	4 cylinder. 996 cc. BigFoot	2001 - 2006	BEL	0P094500 - 0P515896	8M0055008	N/A	8M0074845
50 FourStroke	4 cylinder. 996 cc. BigFoot	2006	CHN	1C000001 - 1C050251	8M0055008	N/A	8M0074845

OUTBOARD

Model	Model Notes	Year Range	Country	Serial # Range	Power Trim Kit Part Number	Port Mount Analog Trim Sender	Starboard Mount Analog Trim Sender
50 FourStroke	4 cylinder. 996 cc. BigFoot	2007 - 2016	CHN	1C050252 and up	N/A(4)	N/A	8M0074845
60 FourStroke	4 cylinder. 996 cc. Standard	2001 - 2006	USA	0T178500 - 1B344306	8M0055008	N/A	8M0074845
60 FourStroke	4 cylinder. 996 cc. Standard	2001 - 2016	BEL	0P094500 and up	8M0055008	N/A	8M0074845
60 FourStroke	4 cylinder. 996 cc. BigFoot	2001 - 2006	USA	0T178500 - 1B344306	8M0055008	N/A	8M0074845
60 FourStroke	4 cylinder. 996 cc. BigFoot	2001 - 2016	BEL	0P094500 and up	8M0055008	N/A	8M0074845
60 FourStroke	4 cylinder. 996 cc.	2006 - 2016	CHN	1C000001 and up	8M0055008	N/A	8M0074845

(2) Accessory trim not available for non-trim models.

(3) Power trim is furnished standard on the "Pro-Kicker" model.

(4) All models furnished with trim as standard.

POWER TRIM CHART - MERCURY/MARINER 2-CYCLE

THESE ARE NOT REPLACEMENT POWER TRIMS. These kits are add-on power trim kits designed for addition to outboard engines that were not furnished a power trim at time of manufacture.

Two Cycle Outboard Power Trim Kit Chart

Model	Model Notes	Year Range	Country	Serial # Range	Power Trim Kit Part Number	Port Mount Trim Sender	Starboard Mount Trim Sender
6		1986 - 2003	USA	0A197112 - 0T800749	850700A07	N/A	N/A
6		1986 - 2016	BEL	9461526 and up	850700A07	N/A	N/A
8		1986 - 2016	USA	0A197112 and up	850700A07	N/A	N/A
8		1986 - 2016	BEL	9461526 and up	850700A07	N/A	N/A
9.9		1986 - 2016	USA	0A197112 and up	850700A07	N/A	N/A
9.9		1986 - 2016	BEL	9461526 and up	850700A07	N/A	N/A
15		1988 - 2016	USA	0B292414 and up	850700A07	N/A	N/A
15		1988 - 2016	BEL	9542620 and up	850700A07	N/A	N/A
20	(3)	1988 - 2003	USA	0B238464 - 0T800749	850700A08	N/A	N/A
20	(3)	1988 - 2016	BEL	9507381 and up	850700A08	N/A	N/A
20 JET		1994 1/2 - 2016	USA	0G044027 and up	850700A08	N/A	N/A
25	(3)	1988 - 2016	USA	0B238464 and up	850700A08	N/A	N/A
25	(3)	1988 - 2016	BEL	9507381 and up	850700A08	N/A	N/A
30	2 cylinder (644 cc) Long shaft.(4)	1995 - 1996 1/2	USA	0G124405 - 0G380073	822344A11	822573A12	N/A
30	2 cylinder (644 cc) Long shaft.(4)	1995 - 1996 1/2	BEL	9840763 - 9928056	822344A11	822573A12	N/A
30	2 cylinder (644 cc) Long shaft.(4)	1996 1/2 - 2002	USA	0G380074 - 0T598999	822344A13	822573A12	N/A
30	2 cylinder (644 cc) Long shaft.(4)	1996 1/2 - 2002	BEL	9928059 - 0P206999	822344A13	822573A12	N/A
30 JET	4 cylinder	1993 - 1997	USA	0C159200 - 0G589999	8M0055000	N/A	N/A
30 JET	3 cylinder. Long shaft only.	1998 - 2000	USA	0G590000 - 0T178499	822344A13	822573A12	N/A
35	2 cylinder.	1984 - 1989	USA	6445653 and up	N/A(1)	N/A	N/A
35	2 cylinder.	1984 - 1989	BEL	9384476 and up	N/A(1)	N/A	N/A
35	2 cylinder.	1984 - 1989	CAN	7209608 and up	N/A(1)	N/A	N/A
40	4 cylinder w/single trim/shock cylinder.	1989 - 1992	USA	0C159200 - 0D181999	N.L.A.	N/A	N/A
40	4 cylinder w/single trim/shock cylinder.	1989 - 1992	BEL	9570790 - 9740999	N.L.A.	N/A	N/A
40	4 cylinder.	1993 - 1997	USA	0D182000 and up	8M0055000	N/A	8M0098264
40	4 cylinder.	1993 - 1997	BEL	9741000 and up	8M0055000	N/A	8M0098264
40	2 cylinder (644 cc) Long shaft.(4)	1995 - 1996 1/2	USA	0G124405 - 0G380073	822344A11	822573A12	N/A
40	2 cylinder (644 cc) Long shaft.(4)	1995 - 1996 1/2	BEL	9840763 - 9928056	822344A11	822573A12	N/A
40	2 cylinder (644 cc) Long shaft.(4)	1996 1/2 - 2016	USA	0G380074 and up	822344A13	822573A12	N/A
40	2 cylinder (644 cc) Long shaft.(4)	1996 1/2 - 2016	BEL	9928059 and up	822344A13	822573A12	N/A
40	3 cylinder 59 CID, Long shaft only.	1997 1/2 - 2016	USA	0G531301 and up	822344A13	822573A12	N/A
40	3 cylinder 59 CID, Long shaft only.	1997 1/2 - 2016	BEL	9973100 and up	822344A13	822573A12	N/A
40 JET	59 CID	2001 - 2016	USA	0T178500 and up	8M0055001	N/A	8M0098264
40 JET	59 CID	2001 - 2016	BEL	0P094500 and up	8M0055001	N/A	8M0098264
45 JET	51.8 CID	1993 - 1997	USA	0D182000 - 0G589999	8M0054999(2)	N/A	8M0098264

Model	Model Notes	Year Range	Country	Serial # Range	Power Trim Kit Part Number	Port Mount Trim Sender	Starboard Mount Trim Sender
45 JET	59 CID	1998 - 2000	USA	0D590000 - 0T178499	8M0055001	N/A	8M0098264
50	3 cylinder w/single trim/shock cylinder.	1989 - 1990	USA	0C160936 - 0D000749	N.L.A.	N/A	N/A
50	3 cylinder w/single trim/shock cylinder.	1989 - 1990	BEL	9469200 - 9683055	N.L.A.	N/A	N/A
50	3 cylinder w/single trim/shock cylinder.	1989 - 1990	CAN	0A721308 and up	N.L.A.	N/A	N/A
50	3 cylinder 51.8 CID	1991 - 1992	USA	0D000750 - 0D181999	N.L.A.	N/A	N/A
50	3 cylinder 51.8 CID	1991 - 1992	BEL	9682500 - 9733881	N.L.A.	N/A	N/A
50	3 cylinder 51.8 CID	1993 - 1997	USA	0D182000 - 0G58999	8M0054999(2)	N/A	8M0098264
50	3 cylinder 51.8 CID	1993 - 1997	BEL	9733882 - 9973099	8M0054999(2)	N/A	8M0098264
50	3 cylinder 59 CID, Long shaft only.	1998 - 2016	USA	0G590000 and up	822344A13	822573A12	N/A
50	3 cylinder 59 CID, Long shaft only.	1998 - 2016	BEL	9973100 and up	822344A13	822573A12	N/A
55	3 cylinder 51.8 CID, Electric models only.	1996 - 1997	USA	0D00750 - 0G589999	N/A	N/A	N/A
55	3 cylinder 51.8 CID, Electric models only.	1996 - 1997	BEL	9741042 - 9973099	N/A	N/A	N/A
55	3 cylinder 59 CID, Requires electric start.	1998 - 2016	USA	0G590000 and up	8M0055001	N/A	8M0098264
55	3 cylinder 59 CID, Requires electric start.	1998 - 2016	BEL	9973100 and up	8M0055001	N/A	8M0098264
60	3 cylinder w/single trim/shock cylinder.	1989 - 1990	USA	0C160936 - 0D000749	N.L.A.	N/A	N/A
60	3 cylinder w/single trim/shock cylinder.	1989 - 1990	BEL	9469200 - 9683055	N.L.A.	N/A	N/A
60	3 cylinder w/single trim/shock cylinder.	1989 - 1990	CAN	0A721308 and up	N.L.A.	N/A	N/A
60	3 cylinder.	1991 - 1992	USA	0D000750 - 0D181999	N.L.A.	N/A	N/A
60	3 cylinder.	1991 - 1992	BEL	9682500 - 9733881	N.L.A.	N/A	N/A
60	3 cylinder.	1993 - 1997	USA	0D182000 - 0G589999	8M0054999(2)	N/A	8M0098264
60	3 cylinder.	1993 - 1997	BEL	9733882 - 9973099	8M0054999(2)	N/A	8M0098264
60	3 cylinder. BigFoot Models	1998 - 2016	USA	0G590000 and up	8M0055008	N/A	8M0098264
60	3 cylinder. BigFoot Models	1998 - 2016	BEL	9973100 and up	8M0055008	N/A	8M0098264
60	3 cylinder. Non-BigFoot Models	1998 - 2016	USA	0G590000 and up	8M0055001	N/A	8M0098264
60	3 cylinder. Non-BigFoot Models	1998 - 2016	BEL	9973100 and up	8M0055001	N/A	8M0098264
70	3 cylinder.	1987 - 2016	USA	0A966142 and up	826729A10(2)	8M0074846	8M0098264
70	3 cylinder.	1987 - 2016	BEL	9502500 and up	826729A10(2)	8M0074846	8M0098264
75	4 cylinder.	1984 - 1987	USA	6428681 - 0B122929	826729A10(2)	8M0074846	8M0098264
75	4 cylinder.	1984 - 1987	BEL	9385911 - 9469199	826729A10(2)	8M0074846	8M0098264
75	4 cylinder.	1984 - 1987	CAN	7208333 - 0A721307	826729A10(2)	8M0074846	8M0098264
75	3 cylinder.	1987 - 1997 1/2	USA	0A966142 - 0G531985	826729A10(2)	8M0074846	8M0098264
75	3 cylinder.	1987 - 1997 1/2	BEL	9502500 - 9934136	826729A10(2)	8M0074846	8M0098264
75	3 cylinder w/electric start only.	1997 1/2 - 2016	USA	0G531986 and up	830250A 7 (5)	N/A	8M0098264
75	3 cylinder w/electric start only.	1997 1/2 - 2016	BEL	9934137 and up	830250A 7 (5)	N/A	8M0098264
80	3 cylinder.	1987 - 2016	USA	0A966142 and up	826729A10(2)	8M0074846	8M0098264
80	3 cylinder.	1987 - 2016	BEL	9502500 and up	826729A10(2)	8M0074846	8M0098264
90	3 cylinder.	1987 - 1997 1/2	USA	0A966142 - 0G531985	826729A10(2)	8M0074846	8M0098264
90	3 cylinder.	1987 - 1997 1/2	BEL	9502500 - 9934136	826729A10(2)	8M0074846	8M0098264
90	3 cylinder w/electric start only.	1997 1/2 - 2016	USA	0G531986 and up	830250A 7 (5)	N/A	8M0098264
90	3 cylinder w/electric start only.	1997 1/2 - 2016	BEL	9934137 and up	830250A 7 (5)	N/A	8M0098264

(1) Power trim can not be added to a non-trim 35 EL model due to the transom bracket used in manufacture. Power trim was available as a factory supplied option.

(2) Installation on a tiller handle model requires the addition of a Power Trim Switch kit found in this section or in Electrical Accessories.

(3) May back fit to 1984 if the 5 tilt pin position clamp brackets are in use.

(4) Non-Sea Pro/Marathon only.

(5) Available at Seaway Marine 206-937-7373 (USA) or seawaymarine.com

POWER TRIM & TILT KITS CHART - FORCE

Force Power Trim & Tilt Kits

Model	Model Notes	Year Range	Serial # Range	Power Trim & Tilt Kits
35	1986A thru 1988B	1986 - 1988		N.L.A.
35	1989A thru 1991B	1989 - 1991		N.L.A.
40	1992C w/Bayonet Connectors	1992		N.L.A.
40	1992C w/Bullet Connectors	1992		N.L.A.
40		1992	0E000001 - 0E009499	N.L.A.
40		1993 - 1994	0E009500 - 0E093699	N.L.A.
40		1995 - 2016	0E093700 and up	822344A12
50	1984A thru 1988D	1984 - 1988		N.L.A.
50	1989A thru 1990D	1989 - 1990		N.L.A.
50	1991A thru 1992A (Bayonet)	1991 - 1992		N.L.A.
50	1992C w/Bullet Connectors	1992		N.L.A.
50		1992	0E000001 - 0E009499	N.L.A.
50		1993 - 1994	0E009500 - 0E093699	N.L.A.
50		1995 - 2016	0E093700 and up	822344A12
60	1984A thru 1985A	1984 - 1985		N.L.A.
70	1991B thru 1992A	1991 - 1992		N.L.A.
70	1992C	1992		N.L.A.
70		1992	0E000001 - 0E009499	N.L.A.
70		1993 - 1995	0E009500 - 0E138599	N.L.A.
75		1996 - 2016	0E138600 and up	N.L.A.
85	1984A thru 1987A	1984 - 1987		N.L.A.
85	1987B thru 1989H	1987 - 1989		N.L.A.
85	"L" Drive	1989		N.L.A.
90	1990A "L" Drive	1990		N.L.A.
90	1990C thru 1991D "L" Drive	1990 - 1991		N.L.A.
90	1990A thru 1991E	1990 - 1991		N.L.A.
90	1991H thru 1992C	1991 - 1992		N.L.A.
90		1992	0E000001 - 0E009499	N.L.A.
90		1993 - 1994	0E009500 - 0E093699	N.L.A.
90		1995 - 1996	0E093700 - 0E173408	8M0090334
90		1996 - 1999	0E173409 - 0E369299	N/A
120	1990A thru 1990B "L" Drive	1990		N.L.A.
120	1990C thru 1992B "L" Drive	1990 - 1992		N.L.A.
120	1990A thru 1991D	1990 - 1991		N.L.A.
120	1991H thru 1992C	1991 - 1992		N.L.A.
120		1992	0E000001 - 0E009499	N.L.A.
120		1993 - 1994	0E009500 - 0E093699	N.L.A.
120		1995 - 1996	0E093700 - 0E173408	8M0090334
120		1996 - 1999	0E173409 - 0E369299	N/A
125	1984A thru 1987A	1984 - 1987		N.L.A.
125	1987B thru 1989E	1987 - 1989		N.L.A.
125	L Drive	1989		N.L.A.
135	1989A	1989		N.L.A.
150	1989A thru 1991J	1989 - 1991		N.L.A.
150	1992A thru 1992C	1992		N.L.A.
150		1992	0E000001 - 0E009499	N.L.A.
150		1993 - 1994	0E009500 - 0E093699	N.L.A.

TRIM LIMIT KITS

Used to limit tilt or trim-up travel on V-6 outboard power trim applications.

TRIM LIMIT SWITCH KIT



87-887979A 2

Kit includes a mercury switch to limit power trim travel and a new, shorter tilt bracket. Switch harness utilizes bullet connectors.

Plugs into the harness for trim relay control on the 3.0L OptiMax (Model Year 2003 & newer).

TRIM LIMIT SWITCH KIT



87-814407A 3

Kit includes a mercury switch to limit power trim travel and a new, shorter tilt bracket.

Fits all Mercury/Mariner V-6 outboard applications which use engine mounted power trim solenoids.

TRIM REDUCER KIT



858915A 1

Kit includes a series of spacers to be installed in the trim cylinder.

Fits V-6 outboard applications (USA 0D082000 and Newer) and the 4 cylinder 135/150/175/200 hp. Verado outboard.

TRAILERING TILT SUPPORT BRACKETS

Locks motor in a tilted position.

TRAILERING TILT LOCK KIT



830578A 1

Locks motor in a fully tilted position.

Fits Mercury/Mariner 6 - 15 hp. 2 cycle and 9.9 hp. FourStroke (1995 thru 1998). See application chart for specific engine models.

TRAILERING TILT LOCK KIT



819504A 2

Positions engine at half tilt for trailering.

Fits Force 90-150 hp. 2 cycle models with or without power trim, 1994 and prior (0E093699 and prior).

TILT SUPPORT BRACKET KIT



8M0072610

This shorter bracket will support the engine in a reduced trim up position when tilt is limited. Prevents engine from trim bleed down. Recommended for use with the trim limit control 8M0059532.

Fits the F150 EFI FourStroke outboard, serial number 1B905505 and above.

OUTBOARD

TILT LOCKS CHART - MERCURY/MARINER/FORCE

Mercury/Mariner/Force Tilt Locks

Model	Model Notes	Brand	Country	Serial # Range	Trailering Tilt-Lock Kits
6-15		Mercury/Mariner	USA	0G032156 and up	830578A 1
6-15		Mercury/Mariner	BEL	9803667 and up	830578A 1
9.9 (4-Stroke)		Mercury/Mariner	USA	0H000058 - 0H016909	830578A 1
35		Force	USA		N.L.A.
35-70	with Power Trim	Force	USA		N.L.A.
70-85	without Power Trim	Force	USA		N.L.A.
75-115	without Power Trim	Mercury/Mariner	USA	0C222000 - 0D283220	N.L.A.
75-115	without Power Trim	Mercury/Mariner	BEL	9589039 - 9793576	N.L.A.
90-150		Force	USA	Prior to - 0E093699	819504A 2
90-150		Force	USA	0E093700 and up	N.L.A.
V-6		Mercury/Mariner	USA	0C222000 and up	N.L.A.

TRAILERING CLIP

TRAILERING CLIP



833006A 1

Clips over center trim ram in extended position. Locks motor in a tilted position.

Fits Mercury/Mariner V-6 engines with Design II (3 ram) power trim systems and the 135/150/175 hp. Verado outboard.

TRAILERING CLIPS CHART - MERCURY/MARINER/FORCE

Mercury/Mariner/Force Trailering Clips

Model	Model Notes	Brand	Year Range	Country	Serial # Range	Trailering Clips
V-6	With Design II (3 ram) Power Trims	Mercury/Mariner	1986 - 2016	USA	0A904646 and up	833006A 1
40	1992C Models and Newer.	Force	1992 - 1994	USA	0E000001 - 0E093699	N.L.A.
50	1991B, 1992C Models and Newer.	Force	1991 - 1994	USA	0E000001 - 0E093699	N.L.A.
70	1991B, 1992C Models and Newer.	Force	1991 - 1995	USA	0E000001 - 0E138599	N.L.A.
75		Force	1996 - 2016	USA	0E138600 and up	N.L.A.
L Drives		Force	1990 - 1992	USA	0E000001 and up	N.L.A.

BATTERY CABLE KIT

Longer than standard, consists of two, 12 ft. (3.66 m) battery cables.

BATTERY CABLE KIT



84- 88439A50

Pair of 12 ft.(3.7 m) cables, 1 red (+) Positive and 1 black (-) Negative, 4 gauge with ring terminals. This is an optional accessory kit and may not reflect the original cables on your engine. For original manufactured service part replacement, the Electronic Parts Catalog should always be used for each specific engine. For alternate length cables, consult the approriate service manual.

Fits Mercury/Mariner 75-V6 outboards and the new Verado.

ELECTRIC START KIT

Converts a manual start engine to an electric start. Additional buttons, harnesses or key switches may be required to complete conversion. See application chart.

ELECTRIC START KIT



50- 44369A 3

Includes an alternator kit and tiller handle mounted ignition key switch.

Fits Mercury / Mariner 55MH (3 cyl. USA 0D000750-0G589999, BEL 9741042-9973099).

ELECTRIC START KIT



50- 90983A 5

Includes alternator kit. Also requires a tiller handle harness & start button or remote control harness assembly.

Fits various Mercury/Mariner 6-25 hp. 2 cycle outboards. See application chart for specific engine models.

ELECTRIC START KIT



50-822462A 1

Includes 15 AMP alternator and regulator/rectifier. Also requires a tiller handle harness & start button or remote control harness/enrichner kit.

Fits Mercury/Mariner 30/40 hp. (2 cyl.) 2 cycle outboards (1994-1997). See application chart for specific engine models.

ELECTRIC START KIT



50-822462A 2

Includes 15 AMP alternator and regulator/rectifier.

Fits Mercury/Mariner 55/60 hp. 2 cycle outboards (1998 and Newer). See application chart for specific engine models.

ELECTRIC START KIT



50-822462A 4

Includes 15 AMP alternator and regulator/rectifier. Tiller handle versions also require use of a transom mounted ignition/choke/horn assembly.

Fits Mercury/Mariner 30/40 hp. (2 cyl.) 2 cycle outboards (1998 and Newer). See application chart for specific engine models.

ELECTRIC START KIT



50-822462A06

Includes 15 AMP alternator and regulator/rectifier. Tiller handle versions also require use of a transom mounted ignition/choke/horn assembly.

Fits Mercury/Mariner 40 hp. (3 cyl. 1997 1/2 and Newer) and 50 hp. (3 cyl. 1998 and Newer). See application chart for specific engine models.

ELECTRIC START KIT



50-856555A 1

Also requires a tiller handle harness & start button or remote control harness assembly.

Fits Mercury/Mariner 8 hp. FourStroke (MY 2001-2004), 9.9 hp. FourStroke (MY 1999-2004) and 15 hp. (323cc) FourStroke outboards.

ELECTRIC START CONVERSION KIT



8M0069693

Includes the components necessary to convert a manual start tiller handle outboard to an electric start tiller handle outboard.

Fits the 8/9.9 hp. FourStroke, Model Year 2005 and newer, both standard and BigFoot models.

ELECTRIC START CONVERSION KIT



50-8M0071380

Converts an MH (manual start tiller) to an EH (electric start tiller).

Fits the 15 hp. FourStroke (351cc) outboard, serial number 0R235949 and newer, and the 20 hp. FourStroke (351cc) outboard, serial number 0R235168 and newer.

ELECTRIC START CONVERSION KIT



50-899783A01

Converts an MH (manual start tiller) to an EH (electric start tiller) model.

25-30 Hp EFI FourStroke outboard, serial number 0R106999 & above.

TILLER HANDLE HARNESS BUTTON

Mounted to the tiller handle of an engine being converted to electric start, this button will activate the solenoid for the starter motor.

TILLER HANDLE HARNESS BUTTON



87- 95810A 8

Fits various Mercury/Mariner 6-25 hp. 2 cycle tiller handle shift outboards. See application chart for specific engine models.

TILLER HANDLE HARNESS BUTTON



87-856556A 2

Fits Mercury/Mariner 9.9 hp. FourStroke (USA 0G760300-0T979999), 8 hp. FourStroke outboards (BEL 0P086824-0P325499) and 15 hp., 323cc. FourStroke (US 0G590000-1B727495) outboards.

TILLER HANDLE HARNESS BUTTON



87-823609A 7

Can also be used when converting electric remote to a tiller handle.

Fits Mercury/Mariner 6-15 hp. 2 cycle outboards (1994 and Newer) and Mercury / Mariner 20/25 hp. 2 cycle outboards (USA 0G044027 and Newer, BEL 9807909 and Newer).

COWL MOUNTED BUTTON

Mounted to the cowl of an engine being converted to electric start, this button will activate the solenoid for the starter motor.

COWL MOUNTED BUTTON



87-825294A 2

Fits Mercury / Mariner 30/40 hp. (2 cyl.) 2 cycle outboards (USA 0G055314-0G589999, BEL 9854537-9928480).

REMOTE CONTROL ENGINE HARNESS

Used along with an electric start conversion kit, this harness will allow hook up to a remote control.

REMOTE CONTROL ENGINE HARNESS



84- 12334A 2

Fits various Mercury/Mariner 6-15 hp.2 cycle outboards. See application chart for specific engine models.

REMOTE CONTROL ENGINE HARNESS



84-856554A 1

Fits Mercury/Mariner 8 hp. 4-Stroke (2001-2004), 9.9 hp. 4-Stroke (1999-2004) and 15 hp. 4-Stroke (1998-2007, 323cc). See application chart for specific engine model serial numbers.

REMOTE CONTROL ENGINE HARNESS



95723A 4

Fits various Mercury/Mariner 15-25 hp. 2 cycle outboards. See application chart for specific engine models.

REMOTE CONTROL ENGINE HARNESS



84-824477A 3

Harness includes an enrichner kit.

Fits Mercury/Mariner 30/40 hp. (2 cyl.) 2 cycle outboards (USA 0G055314-0G589999, BEL 9854537-9928480).

TRANSOM MOUNTED IGNITION KEYSWITCH

A transom mounted keyswitch allowing for activation of the starter solenoid, a choke or enrichner valve.

TRANSOM MOUNTED IGNITION KEYSWITCH



15000A 7

Includes a push-to-choke function and a warning horn. Has a 6 ft. (182 cm) cable length. Has an 8 pin engine connector.

Fits many varying outboards and applications through Model Year 2005 where a keyswitch with warning horn and choke (enrichner) function is desired. Outboards require a remote control engine harness be used in conjunction with this switch in order for it to function. Warning horn feature is not present on all model outboards.

OUTBOARD

TRANSOM MOUNTED IGNITION KEYSWITCH



15000A14

Includes a push-to-choke function and a warning horn. Has a 6 ft. (182 cm) cable length. Has the 14 pin engine connector.

Fits many varying outboards and applications beginning in Model Year 2006 where a keyswitch with warning horn and choke (enrichner) function is desired. Outboards require a remote control engine harness be used in conjunction with this switch in order for it to function. Warning horn feature is not present on all model outboards.

TRANSOM MOUNTED IGNITION KEYSWITCH



47974A10

Has key start and choke functions but no warning horn circuit. Cable length is 5 ft. (152 cm).

Fits the 30/40 hp. 2 cycle outboards of Japanese origin that do not have oil injection.

NEUTRAL INTERLOCK

Used when adding an electric start conversion kit or adding a tiller handle to an electric model, this interlock insures start-in-gear protection.

NEUTRAL INTERLOCK



87-813960A 4

Fits Mercury/Mariner 30/40 hp. (2 cyl.) 2 cycle outboards (USA 0G590000 and Newer, BEL 9973100 and Newer).

ELECTRIC START KITS CHART - MERCURY/MARINER

Mercury/Mariner Electric Start Kits

Model	Brand	Model Notes	Year Range	Country	Serial # Range	Electric Start Kit	Start Button Or Keyswitch	Optional Remote Control Engine Harness
6	Mercury/Mariner	With tiller handle shift	1986 - 1993	USA	0A197112 - 0D280999	50- 90983A 5	87- 95810A 8	84- 12334A 2(1)
6	Mercury/Mariner	With tiller handle shift	1986 - 1993	BEL	9461526 - 9792199	50- 90983A 5	87- 95810A 8	84- 12334A 2(1)
6	Mariner	With side shift	1986 - 1993	USA	0A197112 - 0D280999	50- 90983A 5	N.L.A.	84- 12334A 2(1)
6	Mariner	With side shift	1986 - 1993	BEL	9461526 - 9792199	50- 90983A 5	N.L.A.	84- 12334A 2(1)
6	Mercury/Mariner		1994 - 2003	USA	0D281000 - 0T800749	50- 90983A 5	87-823609A 7	84- 12334A 2(1)
6	Mercury/Mariner		1994 - 2016	BEL	9792200 and up	50- 90983A 5	87-823609A 7	84- 12334A 2(1)
8	Mercury/Mariner	With tiller handle shift	1986 - 1993	USA	0A197112 - 0D280999	50- 90983A 5	87- 95810A 8	84- 12334A 2(1)
8	Mercury/Mariner	With tiller handle shift	1986 - 1993	BEL	9461526 - 9792199	50- 90983A 5	87- 95810A 8	84- 12334A 2(1)
8	Mariner	With side shift	1986 - 1993	USA	0A197112 - 0D280999	50- 90983A 5	N.L.A.	84- 12334A 2(1)
8	Mariner	With side shift	1986 - 1993	BEL	9461526 - 9792199	50- 90983A 5	N.L.A.	84- 12334A 2(1)
8	Mercury/Mariner		1994 - 2016	USA	0D281000 and up	50- 90983A 5	87-823609A 7	84- 12334A 2(1)
8	Mercury/Mariner		1994 - 2016	BEL	9792200 and up	50- 90983A 5	87-823609A 7	84- 12334A 2(1)
8 FourStroke	Mercury/Mariner		1995 - 1998	USA	0H000058 - 0H017099	N.L.A.	N.L.A.	N.L.A.(1)
8 FourStroke	Mercury/Mariner		1999	USA	0H017100 - 0H017349	N.L.A.	N.L.A.	N.L.A.(1)
8 FourStroke	Mercury/Mariner		1999 - 2000	USA	0G760300 - 0T178499	N.L.A.	N.L.A.	N.L.A.(1)
8 FourStroke	Mercury/Mariner	323 cc.	2001 - 2004	BEL	0P086824 - 0P325499	50-856555A 1	87-856556A 2	84-856554A 1(1)
8 FourStroke	Mercury/Mariner	Manual Tiller Model	2005 - 2016	JPN	0R042475 and up	8M0069693	N/A	N/A
8 FourStroke	Mercury/Mariner	Manual Tiller Model	2005 - 2016	BEL	0P325500 and up	8M0069693	N/A	N/A

Model	Brand	Model Notes	Year Range	Country	Serial # Range	Electric Start Kit	Start Button Or Keyswitch	Optional Remote Control Engine Harness
9.9	Mercury/Mariner	With tiller handle shift	1986 - 1993	USA	0A197112 - 0D280999	50- 90983A 5	87- 95810A 8	84- 12334A 2(1)
9.9	Mercury/Mariner	With tiller handle shift	1986 - 1993	BEL	9461526 - 9792199	50- 90983A 5	87- 95810A 8	84- 12334A 2(1)
9.9	Mariner	With side shift	1986 - 1993	USA	0A197112 - 0D280999	50- 90983A 5	N.L.A.	84- 12334A 2(1)
9.9	Mariner	With side shift	1986 - 1993	BEL	9461526 - 9792199	50- 90983A 5	N.L.A.	84- 12334A 2(1)
9.9	Mercury/Mariner		1994 - 2016	USA	0D281000 and up	50- 90983A 5	87-823609A 7	84- 12334A 2(1)
9.9	Mercury/Mariner		1994 - 2016	BEL	9792200 and up	50- 90983A 5	87-823609A 7	84- 12334A 2(1)
9.9 FourStroke	Mercury/Mariner	232 cc.	1995 - 1998	USA	0H000058 - 0H016909	N.L.A.	N.L.A.	N.L.A.(1)
9.9 FourStroke	Mercury/Mariner	323 cc.	1999 - 2004	USA	0G760300 - 0T979999	50-856555A 1	87-856556A 2	84-856554A 1(1)
9.9 FourStroke	Mercury/Mariner	323 cc.	1999 - 2004	BEL	0P075166 - 0P325499	50-856555A 1	87-856556A 2	84-856554A 1(1)
9.9 FourStroke	Mercury/Mariner	Manual Tiller Model	2005 - 2016	JPN	0R042475 and up	8M0069693	N/A	N/A
9.9 FourStroke	Mercury/Mariner	Manual Tiller Model	2005 - 2016	BEL	0P325500 and up	8M0069693	N/A	N/A
15	Mercury/Mariner	With tiller handle shift	1986 - 1993	USA	0A197112 - 0D280999	50- 90983A 5	87- 95810A 8	84- 12334A 2(1)
15	Mercury/Mariner	With tiller handle shift	1986 - 1993	BEL	9461526 - 9792199	50- 90983A 5	87- 95810A 8	84- 12334A 2(1)
15	Mariner	With side shift	1986 - 1993	USA	0A197112 - 0D280999	50- 90983A 5	N.L.A.	84- 12334A 2(1)
15	Mariner	With side shift	1986 - 1993	BEL	9461526 - 9792199	50- 90983A 5	N.L.A.	84- 12334A 2(1)
15	Mercury/Mariner		1994 - 2016	USA	0D281000 and up	50- 90983A 5	87-823609A 7	84- 12334A 2(1)
15	Mercury/Mariner		1994 - 2016	BEL	9792200 and up	50- 90983A 5	87-823609A 7	84- 12334A 2(1)
15	Mercury/Mariner	Sea Pro and Marathon	1994 1/2 - 2016	USA	0G044027 and up	50- 90983A 5	87-823609A 7	95723A 4(1)
15	Mercury/Mariner	Sea Pro and Marathon	1994 1/2 - 2016	BEL	9807909 and up	50- 90983A 5	87-823609A 7	95723A 4(1)
15 FourStroke	Mercury/Mariner	323 cc.	1998	USA	0G590000 - 0G760299	50-856555A 1	N.L.A.	84-856554A 1(1)
15 FourStroke	Mercury/Mariner	323 cc.	1999 - 2008	USA	0G760300 and up	50-856555A 1	87-856556A 2	84-856554A 1(1)
15 FourStroke	Mercury/Mariner	351 cc.	2008 - 2016	JPN	0R235949 and up	50-8M0071380	N/A	N/A
15	Mariner	Early Japanese			684 Series and up	N.L.A.	N/A	N/A
18XD	Mercury		1984 - 1985	USA	6443973 and up	50- 90983A 5	87- 95810A 8	95723A 4(1)
18XD	Mercury		1984 - 1985	BEL	9378151 - 9415100	50- 90983A 5	87- 95810A 8	95723A 4(1)
18XD	Mercury		1984 - 1985	CAN	7209533 and up	50- 90983A 5	87- 95810A 8	95723A 4(1)
20	Mercury	With tiller handle shift	1986 - 1994 1/2	USA	6443973 - 0G044026	50- 90983A 5	87- 95810A 8	95723A 4(1)
20	Mercury	With tiller handle shift	1986 - 1994 1/2	BEL	9415101 - 9807908	50- 90983A 5	87- 95810A 8	95723A 4(1)
20	Mercury	With tiller handle shift	1986 - 1994 1/2	CAN	7209533 and up	50- 90983A 5	87- 95810A 8	95723A 4(1)
20	Mariner	With side shift	1986 - 1994 1/2	USA	6443973 - 0G044026	50- 90983A 5	N.L.A.(5)	95723A 4(1)
20	Mariner	With side shift	1986 - 1994 1/2	BEL	9415101 - 9807908	50- 90983A 5	N.L.A.(5)	95723A 4(1)
20	Mariner	With side shift	1986 - 1994 1/2	CAN	7209533 and up	50- 90983A 5	N.L.A.(5)	95723A 4(1)
20	Mercury/Mariner		1994 1/2 - 2003	USA	0G044027 - 0T800749	50- 90983A 5	87-823609A 7	95723A 4(1)
20	Mercury/Mariner		1994 1/2 - 2016	BEL	9807909 and up	50- 90983A 5	87-823609A 7	95723A 4(1)
20 FourStroke	Mercury/Mariner	351 cc.	2008 - 2016	JPN	0R235168 and up	50-8M0071380	N/A	N/A
25, 25XD	Mercury	With tiller handle shift	1984 - 1994 1/2	USA	6443973 - 0G044026	50- 90983A 5	87- 95810A 8	95723A 4(1)
25, 25XD	Mercury	With tiller handle shift	1984 - 1994 1/2	BEL	9415101 - 9807908	50- 90983A 5	87- 95810A 8	95723A 4(1)
25, 25XD	Mercury	With tiller handle shift	1984 - 1994 1/2	CAN	7209533 and up	50- 90983A 5	87- 95810A 8	95723A 4(1)
25	Mariner	With side shift	1986 - 1994 1/2	USA	6443973 - 0G044026	50- 90983A 5	N.L.A.(5)	95723A 4(1)
25	Mariner	With side shift	1986 - 1994 1/2	BEL	9415101 - 9807908	50- 90983A 5	N.L.A.(5)	95723A 4(1)
25	Mariner	With side shift	1986 - 1994 1/2	CAN	7209533 and up	50- 90983A 5	N.L.A.(5)	95723A 4(1)
25	Mercury/Mariner		1994 1/2 - 2016	USA	0G044027 and up	50- 90983A 5	87-823609A 7	95723A 4(1)
25	Mercury/Mariner		1994 1/2 - 2016	BEL	9807909 and up	50- 90983A 5	87-823609A 7	95723A 4(1)

OUTBOARD

Model	Brand	Model Notes	Year Range	Country	Serial # Range	Electric Start Kit	Start Button Or Keyswitch	Optional Remote Control Engine Harness
25 FourStroke	Mercury/Mariner	Carb models only	1998 - 2006	USA	0G590000 - 1B344298	(3)	N/A	N/A
25 FourStroke	Mercury/Mariner	Carb models only	1998 - 2006	BEL	9973100 - 0P358282	(3)	N/A	N/A
25 FourStroke	Mercury/Mariner	EFI Tiller models	2006 - 2016	JPN	0R106999 and up	50-899783A01	N/A	N/A
25 FourStroke	Mercury/Mariner	EFI Tiller models	2006 - 2016	BEL	0P401000 and up	50-899783A01	N/A	N/A
30	Mercury/Mariner		1994 - 1997	USA	0G055314 - 0G589999	50-822462A 1	87-825294A 2	84-824477A 3(1)
30	Mercury/Mariner		1994 - 1997	BEL	9854537 - 9928480	50-822462A 1	87-825294A 2	84-824477A 3(1)
30	Mercury/Mariner		1998 - 2002	USA	0G590000 - 0T598999	50-822462A 4(2)	15000A 7	N/A
30	Mercury/Mariner		1998 - 2002	BEL	9973100 - 0P206999	50-822462A 4(2)	15000A 7	N/A
30 FourStroke	Mercury/Mariner	EFI Tiller models	2006 - 2016	JPN	0R106999 and up	50-899783A01	N/A	N/A
30 FourStroke	Mercury/Mariner	EFI Tiller models	2006 - 2016	BEL	0P401000 and up	50-899783A01	N/A	N/A
40	Mercury/Mariner	2 cylinder	1994 - 1997	USA	0G055314 - 0G589999	50-822462A 1	87-825294A 2	84-824477A 3(1)
40	Mercury/Mariner	2 cylinder	1994 - 1997	BEL	9854537 - 9928480	50-822462A 1	87-825294A 2	84-824477A 3(1)
40	Mercury/Mariner	2 cylinder	1998 - 2016	USA	0G590000 and up	50-822462A 4(2)	15000A 7	N/A
40	Mercury/Mariner	2 cylinder	1998 - 2016	BEL	9973100 and up	50-822462A 4(2)	15000A 7	N/A
40	Mercury/Mariner	3 cylinder	1997 1/2 - 2016	USA	0G531801 and up	50-822462A06	15000A 7	N/A
40	Mercury/Mariner	3 cylinder	1997 1/2 - 2016	BEL	9973100 and up	50-822462A06	15000A 7	N/A
50	Mercury/Mariner	3 cylinder	1998 - 2016	USA	0G590000 and up	50-822462A06	15000A 7	N/A
50	Mercury/Mariner	3 cylinder	1998 - 2016	BEL	9973100 and up	50-822462A06	15000A 7	N/A
55MH	Mercury/Mariner	3 cylinder, 51.8 CID	1996 - 1997	USA	0D000750 - 0G589999	50- 44369A 3	N/A	N/A
55MH	Mercury/Mariner	3 cylinder, 51.8 CID	1996 - 1997	BEL	9741042 - 9973099	50- 44369A 3	N/A	N/A
55	Mercury/Mariner	3 cylinder, 59 CID	1998 - 2016	USA	0G590000 and up	50-822462A 2	N/A	N/A
55	Mercury/Mariner	3 cylinder, 59 CID	1998 - 2016	BEL	9973100 and up	50-822462A 2	N/A	N/A
60	Mercury/Mariner	59 CID	1998 - 2016	USA	0G590000 and up	50-822462A 2	N/A	N/A
60	Mercury/Mariner	59 CID	1998 - 2016	BEL	9973100 and up	50-822462A 2	N/A	N/A

(1) Required for hook-up to optional remote control or transom mounted keyswitch.

(2) Neutral Interlock kit no. 87-813960A 4 required to complete this conversion.

(3) No kit available for this model.

(5) Use the comparable black colored Mercury harness button 87-95810A 8.

TILLER HANDLE KIT - TRADITIONAL STYLE

Used to convert a remote steering engine to tiller handle operation. Traditional mechanical steering handle.

TILLER HANDLE KIT



856537A 5

Black handle. Components included converts both electric and manual engine to tiller handle front shift models.

Fits Mercury/Mariner 9.9 hp. FourStroke (1999-2004) and 15 hp. FourStroke (1999-2007, 323cc). See application chart for specific engine models.

TILLER HANDLE KIT



8M0103839

Converts an electric start remote control outboard to an electric start tiller handle outboard.

Fits 9.9 hp. FourStroke, Model Year 2005 & newer, both standard and BigFoot models requiring SAE ended throttle/shift cables. Serial Numbers USA-0R042475-0R192771 & BEL-0P325500-0P513329.

8M0103840

Converts an electric start remote control outboard to an electric start tiller handle outboard.

Fits 9.9 hp. FourStroke, Model Year 2005 & newer, both standard and BigFoot models requiring SAE ended throttle/shift cables. Serial Numbers USA-0R042475-0R192771 & BEL-0P325500-0P513329.

TILLER HANDLE CONVERSION KIT



8M0103837

Converts an ERC to EH model.

Fits the 9.9 hp. FourStroke outboard with EPA calibrations and requiring Mercury style ended throttle/shift cables. Serial Numbers USA-0R192772 & newer, BEL-0P513330 & newer.

TILLER HANDLE CONVERSION KIT



8M0103838

Converts an ERC to EH model.

Fits the 9.9 hp. FourStroke outboard with EU calibrations and requiring Mercury style ended throttle/shift cables. Serial Numbers USA-0R192772 & newer, BEL-0P513330 & newer.

TILLER HANDLE CONVERSION KIT



8M0104197

Converts an ERC (electric remote model) to an EH (electric tiller model). Power trim models require additional kit 87-898101A02 to relocate trim switch from the cowl to the handle.

Fits the 15 hp. FourStroke (351cc) outboard, serial number 0R235949 and above.

TILLER HANDLE CONVERSION KIT



8M0051060

Converts an ERC (electric remote model) to an EH (electric tiller model). Power trim models require additional kit 87-898101A02 to relocate trim switch from the cowl to the handle.

Fits the 20 hp. FourStroke (351cc) outboard, serial number 0R235168 and above.

TILLER HANDLE KIT



94185A17

Fits Mariner 20 hp. 2 cycle outboards (USA 6443973-0B238463, BEL 9415101-9507380, CAN 7209533-0A730006).

TILLER HANDLE KIT



94185A18

Fits Mariner 20 hp. 2 cycle outboards (USA 0B238464-0G044026, BEL 9507381-9807908, CAN 0A730007 and Newer).

TILLER HANDLE KIT



821468A 7

Black handle. Converts to tiller shift with hand adjustable co-pilot. Electric start models require keyswitch or start button. See application chart.

Fits various Mercury/Mariner 20/25 hp. 2 cycle outboards 1994 1/2 and newer. See application chart for specific engine models. This handle does NOT fit JET outboards.

TILLER HANDLE KIT



821455A20

Black handle. Power trim models require trim switch kit.

Fits Mercury 25 hp. 4-Stroke outboards (USA 0G590000-0G760299).

TILLER HANDLE KIT



821455A26

Black handle. Power trim models require trim switch kit.

Fits Mercury/Mariner 25 hp. Carbureted 4-Stroke outboards (USA 0G760300 and Newer).

TILLER HANDLE CONVERSION KIT



8M0051061

This kit converts an MRC (manual remote control) model to a tiller handle operation.

Fits the 25-30 Hp EFI FourStroke Outboard, serial number 0R106999 & above.

TILLER HANDLE CONVERSION KIT



8M0051062

This kit converts an ERC (electric remote control) model to a tiller handle operation. Models with power trim will have trim switch on the side of the cowl. To replace that switch with one on the handle, order an 87-898101A01 trim switch kit if desired.

Fits the 25-30 Hp EFI FourStroke Outboard, serial number JPN-0R106999 & above and BEL-0P401000 & above.

TRIM SWITCH KIT



87-898101A01

When installing a tiller handle conversion kit to a remote model that has power trim, it may be desired to replace the cowl mounted trim switch with one mounted on the handle. This kit will make that trim switch conversion from the cowl to the tiller handle.

Fits the 25-30 Hp EFI FourStroke Outboard, serial number JPN-0R106999 & above and BEL-0P401000 & above.

TILLER HANDLE KIT



821455T 8

Black handle. Electric start models require transom mounted keyswitch and a neutral interlock. Power trim models require a trim switch kit. Hand adjustable co-pilot included.

Fits various Mercury/Mariner 30/40 hp. (2 cyl.) 2 cycle outboards. See application chart for specific engine models.

TILLER HANDLE KIT



821455A22

For carbureted models only. Power trim models require a trim switch kit.

Fits Mercury/Mariner 30/40 hp. 4-Stroke (3 cyl.) carbureted outboards (MY1999-2005) and 40 hp. (3 cyl.) manual start, carbureted, short shaft, vertical shift FourStroke outboards (MY2006).

TILLER HANDLE KIT



821455A16

For EFI models only. Power trim models require a trim switch kit.

Fits Mercury/Mariner 30/40 hp. 4-Stroke (3 cyl.) EFI outboards (MY1999-2005).

TILLER HANDLE KIT



821455A17

For EFI short shaft models only. Power trim models require a trim switch kit.

Fits Mercury/Mariner 40 hp. (3 cyl.) EFI short shaft, vertical shift FourStroke outboards (MY2006).

TILLER HANDLE KIT



821455A24

Has rotary actuated shift.

Fits the MY2006, F40hp. 3-cylinder EFI Longshaft FourStroke outboard with serial number CHN 1C000001-1C049738 and BEL 0P401000-0P515896.

TILLER HANDLE KIT



828813A29

Black handle. See application chart for additional components required to complete the conversion. Power trim models require a trim switch kit.

Fits various Mercury/Mariner 40/50 hp. (3 cyl.) and 30 JET (3 cyl.) 2 cycle outboards. See application chart for specific engine models.

TILLER HANDLE KIT



95419A 1

Requires transom mounted ignition/choke. See application chart.

Fits Mariner 40 hp. outboard (Japanese origin). See application chart for specific engine models.

TILLER HANDLE KIT



828813A 2

Black handle.

Fits various Mercury/Mariner 40/45/50 hp. 4-Stroke outboards with standard gearcase. See application chart for specific engine models.

TILLER HANDLE KIT



880095A 1

Black handle. Kit contains the complete handle assembly, hand adjustable co-pilot and shift components.

Fits Mercury/Mariner 40 hp. (4 cyl.) 4-Stroke Bigfoot Carb Model (2001) and Mercury/Mariner 50/60 hp. (4 cyl.) 4-Stroke Carb Model outboards (2001 and Newer). See application chart for specific engine models and serial numbers.

TILLER HANDLE KIT



880095A05

Black handle. Kit contains the complete handle assembly, hand adjustable co-pilot and shift components.

Fits Mercury/Mariner 40 hp. (4 cyl.) FourStroke Bigfoot EFI Model and 50/60 hp. (4 cyl.) FourStroke EFI Model outboards (USA 0T409000-1B226999 and BEL 0P153500-0P400999).

TILLER HANDLE KIT



880095A04

Black handle. Kit contains the complete handle assembly, hand adjustable co-pilot and shift components.

Fits Mercury/Mariner 40 hp. (4 cyl.) FourStroke Bigfoot EFI Model and 50/60 hp. (4 cyl.) FourStroke EFI Model outboards (CHN-1C000001-1C050251).

TILLER HANDLE KIT



889246A37

Coverts a remote model Jet outboard to a tiller handle Jet outboard.

Fits the Mercury/Mariner 40 hp. (4 cylinder) FourStroke Jet outboard, CHN-1C000001 & above.

TILLER HANDLE KIT



880093A03

Black handle. Kit contains the complete handle assembly, hand adjustable co-pilot and shift components. Converts an ERC (remote) model to an EH (tiller) model.

Fits Mercury/Mariner 40 hp. (3 cyl.) FourStroke EFI and 40/50/60 hp. (4 cyl.) FourStroke EFI Model outboards (CHN-1C050252 & above).

TILLER HANDLE KIT



816366A48

Black handle. See application chart for additional components required to complete the conversion. Power trim models require a trim switch kit.

Fits various Mercury/Mariner 60 hp. and 45 JET 2 cycle outboards (1999 and Newer). See application chart for specific engine models.

TILLER HANDLE KIT



816366A42

Black handle. Converts remote models to tiller handle control.

Fits Mercury/Mariner 75/90/115 hp. 4-Stroke outboards through Model Year 2003 (ending serial numbers USA 0T800999 & BEL 0P267999). Will not fit new 2004 product with the EZ shift gearcase.

TILLER HANDLE KIT



816366A52

Black handle. Converts remote models to tiller handle control.

Fits Mercury/Mariner 75-115 EFI FourStroke outboards (USA 1B366823-2B094955, BEL 0P459572 and above).

TILLER HANDLE KIT



12022A40

Black handle. JET outboards require a shift attaching kit.

Fits various Mercury/Mariner 65 JET/75/90 hp. (3 cyl.) 2 cycle outboards (1997 and Newer). See application chart for specific engine models.

TILLER HANDLE KIT



12022A41

Black handle. JET outboards require a shift attaching kit.

Fits various Mercury/Mariner 80 JET/100/115/125 hp. (4 cyl.) 2 cycle outboards. See application chart for specific engine models. Mariner gray handle kits for this application are no longer available.

TILLER HANDLE KIT



896648A07

Black handle. Converts remote models to a tiller handle control.

Fits the 75/90/115 DFI, 1.5L OptiMax Outboard, Model Year 2004 & 2005 with serial number 0T801000-1B226999.

TILLER HANDLE KIT



896648A09

Black handle. Converts remote models to a tiller handle control.

Fits the 75/90/115 DFI, 1.5L OptiMax Outboard, Model Year 2006 and newer.

SHIFT ATTACHING KIT

Needed to activate the shift on a JET outboard when converting from remote operation to a tiller handle operation.

SHIFT ATTACHING KIT

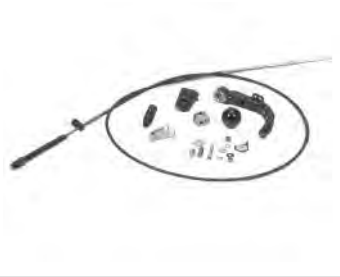

850000A 2

Fits Mercury / Mariner 45 JET 2 cycle outboards (USA 0D182000 and Newer).

SHIFT ATTACHING KIT



850000A 3

Fits Mercury / Mariner 65 JET 2 cycle outboards (USA 0D182000 and Newer) and 80 JET 2 cycle outboards (USA 0G449551 and Newer).

SHIFT ATTACHING KIT



850000A 4

Fits Mercury / Mariner 30 JET (3 cyl.) 2 cycle outboards (USA 0G590000 and Newer).

TILLER HANDLE - BIG TILLER STEERING

New features and improved designs that make driving a large Tiller Outboard engine easy, safe and friendly to the user. Used on large HP engines 40-115 4 stroke, 75-250 OptiMax
and 135-200 4 cylinder DTS Verado

MECHANICAL TILLER WITH P/S



8M0094637

The Big Tiller is designed for optimal performance and ergonomic comfort. With improved friction adjustments, a hydraulic locking feature eliminating torque, easy access to the throttle shift handle and a trim button at the end of the handle the Big Tiller provides safe and effortless operation. The RPM Adjustment switch (Troll Control) is included as standard equipment on this model.

The LED light switch is available as an option on this model.

Power Steering is strongly recommended for 75 HP and above.
75-115 HP FourStroke
75-115 HP 1.5L OptiMax
Power Steering is required - 135-250 HP OptiMax (2.5.L and 3.0L)

DTS TILLER HANDLE WITH P/S



8M0098585

The Big Tiller is designed for optimal performance and ergonomic comfort. With improved friction adjustments, a hydraulic locking feature eliminating torque, easy access to the throttle and shift handle and a trim button at the end of the handle the Big Tiller provides safe and effortless operation.

The RPM Adjustment (Troll Control) and LED light switch are standard on this model.

Power Steering is required - 135-200 HP 4 Cylinder Verado.

MECHANICAL TILLER WITH P/S



8M0061721

The Big Tiller is designed for optimal performance and ergonomic comfort. With improved friction adjustments, a hydraulic locking feature eliminating torque, easy access to the throttle and shift handle and a trim button at the end of the handle the Big Tiller provides safe and effortless operation. The RPM adjustment switch (Troll Control) is included as standard equipment on this model.

The LED light switch is available as an option on this model.

Power Steering is strongly recommended for 75 HP and above.
The Big Tiller kit (Power Steering) with extra length and bent arm to attach to the 150 HP FourStroke engine.

MECHANICAL TILLER WITHOUT P/S



8M0093581

The Big Tiller is designed for optimal performance and ergonomic comfort. With improved friction adjustments, a hydraulic locking feature eliminating torque, easy access to the throttle and shift handle and a trim button at the end of the handle the Big Tiller provides safe and effortless operation.

The RPM Adjustment (Troll Control) and LED light switch are optional on this model.

Tiller is 3 inches shorter than previous model p/n 8M0074795.

Power Steering is strongly recommended for 75 HP and above.
75-115 HP FourStroke
75-115 HP 1.5L OptiMax

MECHANICAL TILLER WITHOUT P/S



879291A04

The Big Tiller is designed for optimal performance and ergonomic comfort. With improved friction adjustments, a hydraulic locking feature eliminating torque, easy access to the throttle and shift handle and a trim button at the end of the handle the Big Tiller provides safe and effortless operation.

The RPM Adjustment (Troll Control) and LED light are optional on this model.

T/S kit 40 - 60 HP not included

40-60 HP FourStroke used with ELPT generation change S/N 1C050252 and above.

MECHANICAL TILLER WITHOUT P/S



879291A05

The Big Tiller is designed for optimal performance and ergonomic comfort. With improved friction adjustments, a hydraulic locking feature eliminating torque, easy access to the throttle and shift handle and a trim button at the end of the handle the Big Tiller provides safe and effortless operation.

The RPM Adjustment (Troll Control) and LED light switch are optional on this model.

This is a conversion kit that allows installation of the Big Tiller on a current tiller handle model ELHPT 40 - 60 HP FourStroke with generation change S/N 1C050252 and above.
T/S kit 40 - 60 HP is not included.

THROTTLE AND SHIFT KIT- 40-60 FOURSTROKE



897978K04

The kit includes 2 - T/S cables. These cables are designed to provide best in class installation for this engine family.

The kit is designed to work with the 40 - 60 HP engines. This kit is not compatible with Jet Outboard engines.

THROTTLE AND SHIFT KIT- 75-115 FOURSTROKE TILLER



897978K01

The kit includes 2 - T/S cables. These cables are designed to provide the best in class installation for this engine family.

The kit is designed to work with the 75-115 HP FourStroke engines.

THROTTLE AND SHIFT KIT- 75-115 1.5L OPTIMAX TILLER



897978K02

The kit includes 2 - T/S cables. These cables are designed to provide the best in class installation for this engine family.

The kit is designed to work with 75 - 115 HP OptiMax engines.

THROTTLE AND SHIFT KIT- 135-250 OPTIMAX



897978K03

The kit includes 2 - T/S cables. These cables are designed to provide the best in class installation for this engine family.

The kit is designed to work with the 135 - 250 HP OptiMax engines.

THROTTLE AND SHIFT KIT- 150 FOURSTROKE

8M0061103

The kit includes 2 - T/S cables. These cables are designed to provide best in class installation for this engine family.

The kit is designed to work with 150 HP FourStroke engines.

TROLL CONTROL KIT



87-8M0083437

RPM adjustment at your finger tips. This kit can be added to the Big Tiller Mechanical without P/S as an option

OUTBOARD

LED LIGHT AND SWITCH KIT



897978T02

New LED light and Switch Kit is an option on all Mechaincal Big Tiller units.
Allows for easy installation on the new Big Tiller. Light up your boat with a soft Amber light to make night fishing or early morning fishing more fexible.

OUTBOARD STABILIZER CLIPS- TRAILERING



64-891762A04

Helps keep engine centered during trailering
Safety orange durable plastic material
Fits most cylinder rods on engines manufactured in 1997 and newer.
Snaps over outboard's hydraulic steering cylinder rods

TILLER HANDLE KITS CHART - MERCURY/MARINER

Mercury/Mariner Tiller Handle Kits

Model	Model Notes	Year Range		Serial # Range	Tiller Handle Kit Part Number	Handle Color	Shift Attaching Kit
8 FourStroke	232 cc. With Side Shift.	1995 - 1998	USA	0H000058 - 0H017099	N.L.A.	Black	N/A
					N.L.A.	Gray	N/A
8 FourStroke	232 cc. With Side Shift.	1999 - 2000	USA	0H017100 - 0H017349	N.L.A.	Black	N/A
8 FourStroke	232 cc. With Side Shift.	1999 - 2000	USA	0G760300 and up	N.L.A.	Black	N/A
8 FourStroke	232 cc. With Shift in Handle.	1995 - 1998	USA	0H000058 - 0H017099	N.L.A.	Black	N/A
					N.L.A.	Gray	N/A
8 FourStroke	232 cc. With Shift in Handle.	1999 - 2000	USA	0H017100 - 0H017349	N.L.A.	Black	N/A
8 FourStroke	232 cc. With Shift in Handle.	1999 - 2000	USA	0G760300 and up	N.L.A.	Black	N/A
8 FourStroke	323 cc.	2001 - 2004	BEL	0P086824 - 0P325499	856537A 5	Black	N/A
8 FourStroke	Manual start models	2005 - 2006	JPN	0R042475 - 0R192771	8M0103839(14)	Black	N/A
			BEL	0P325500 - 0P513329			
9.9 FourStroke	232 cc. With Side Shift.	1995 - 1998	USA	0H000058 - 0H016909	N.L.A.	Black	N/A
					N.L.A.	Gray	N/A
9.9 FourStroke	232 cc. With Shift in Handle.	1995 - 1998	USA	0H000058 - 0H016909	N.L.A.	Black	N/A
					N.L.A.	Gray	N/A
9.9 FourStroke	323 cc.	1999 - 2004	USA	0G760300 - 0T979999	856537A 5	Black	N/A
		1999 - 2004	BEL	0P075166 - 0P325499			
9.9 FourStroke	SAE Manual Remote(14)	2005 - 2006	JPN	0R042475 - 0R192771	8M0103839(14)	Black	N/A
			BEL	0P325500 - 0P513329			
9.9 FourStroke	SAE Electric Remote(14)	2005 - 2006	JPN	0R042475 - 0R192771	8M0103840(14)	Black	N/A
			BEL	0P325500 - 0P513329			
9.9 FourStroke, EPA	MERC Electric Remote(15)	2006 - 2016	JPN	0R192772 and up	8M0103837(15)	Black	N/A
9.9 FourStroke, EU	MERC Electric Remote(15)	2006 - 2016	BEL	0P513330 and up	8M0103838(15)	Black	N/A
15 FourStroke	323cc	1998	USA	0G590000 - 0G760299	N.L.A.	Black	N/A
					N.L.A.	Gray	N/A
15 FourStroke	323cc	1999 - 2008	USA	0G760300 and up	856537A 5	Black	N/A
15 FourStroke	351cc, Electric Remote	2008 - 2016	JPN	0R235949 and up	8M0104197(13)	Black	N/A
20		1984 - 1987	USA	6443973 - 0B238463	94185A17	Gray	N/A
			BEL	9415101 - 9507380			
			CAN	7209533 - 0A730006			
20		1988 - 1994	USA	0B238464 - 0G044026	94185A18	Gray	N/A
			BEL	9507381 - 9807908			
			CAN	0A730007 and up			
20		1994 1/2 - 2003	USA	0G044027 - 0T800749	821468A 7(1)	Black	N/A

Model	Model Notes	Year Range		Serial # Range	Tiller Handle Kit Part Number	Handle Color	Shift Attaching Kit
			BEL	9807909 and up			
20 JET		1994 - 1998	USA	0G044027 - 0G760299	N/A	N/A	N/A
20 JET		1999 - 2016	USA	0G760300 and up	N/A	N/A	N/A
20 FourStroke	351cc, Electric Remote	2008 - 2016	JPN	0R235168 and up	8M0051060(13)	Black	N/A
25		1994 1/2 - 2005	USA	0G044027 - 1B226999	821468A 7(1)	Black	N/A
			BEL	9807909 - 0P400999			
25 FourStroke		1998	USA	0G590000 - 0G760299	821455A20(2)	Black	N/A
					N.L.A.(9)	Gray	N/A
25 FourStroke	Carbureted Models	1999 - 2006	USA	0G760300 - 1B344298	821455A26(2)	Black	N/A
25 FourStroke	EFI, Manual Version	2006 - 2016	JPN	0R106999 and up	8M0051061(12)	Black	N/A
			BEL	0P401000 and up			
25 FourStroke	EFI, Electric Version	2006 - 2016	JPN	0R106999 and up	8M0051062(13)	Black	N/A
			BEL	0P401000 and up			
30E / EL	(Japanese Origin) Without oil injection.			689 Series and up	N.L.A.(3)	Gray	N/A
30E / EL	(Japanese Origin) With oil injection.			689 Series and up	N.L.A.(4)	Gray	N/A
30	2 cylinder, 644 cc.	1994 - 1998	USA	0G053314 - 0G760299	821455T 8(5)	Black	N/A
			BEL	9812719 - 0P016999			
30		1994 - 1998	USA	0G053314 - 0G760299	N.L.A.(9)	Gray	N/A
			BEL	9812719 - 0P016999			
30	2 cylinder, 644 cc.	1999 - 2002	USA	0G760300 - 0T598999	821455T 8(5)	Black	N/A
			BEL	0P017000 - 0P206999			
30 FourStroke	3 cyl. Carbureted	1999 - 2016	USA	0G760300 and up	821455A22(2)	Black	N/A
			BEL	0P094500 and up			
30 FourStroke	3 cyl. EFI	2002 - 2005	USA	0T409000 - 1B226999	821455A16(2)	Black	N/A
			BEL	0P153500 - 0P400999			
30 FourStroke	EFI, Manual Version	2006 - 2016	JPN	0R106999 and up	8M0051061(12)	Black	N/A
			BEL	0P401000 and up			
30 FourStroke	EFI, Electric Version	2006 - 2016	JPN	0R106999 and up	8M0051062(13)	Black	N/A
			BEL	0P401000 and up			
30 Jet	4 cylinder.	1994 - 1997	USA	0C159200 - 0G589999	N.L.A.	Black	N.L.A.
30 Jet	3 cylinder.	1998	USA	0G590000 - 0G760299	828813A29(2)(4)	Black	850000A 4
30 Jet	3 cylinder.	1998	USA	0G590000 - 0G760299	828813A29(2)(4)(9)	Black	850000A 4
30 Jet	3 cylinder.	1999 - 2016	USA	0G760300 and up	828813A29(2)(4)	Black	850000A 4
35	2 cyl. Models w/ 2 piece steering arm.	Prior to - 1989	USA	0C159200 and up	N.L.A.(2)	Black	N/A
		Prior to - 1989	BEL	9570790 and up			
40	4 cyl. Models w/ 2 piece steering arm & single tri	1989 - 1997	USA	0C159200 and up	N.L.A.	Black	N/A
			BEL	9570790 and up			
40	4 cyl. Models w/ 2 piece steering arm & single tri	1989 - 1997	USA	0C159200 and up	N.L.A.	Gray	N/A
			BEL	9570790 and up			
40	2 cylinder, 644 cc.	1994 - 1998	USA	0G053314 - 0G760299	821455T 8(2)(5)	Black	N/A
			BEL	9812719 - 0P016999			
40	2 cylinder, 644 cc.	1994 - 1998	USA	0G053314 - 0G760299	N.L.A.(9)	Gray	N/A
			BEL	9812719 - 0P016999			
40	2 cylinder, 644 cc.	1999 - 2016	USA	0G760300 and up	821455T 8(2)(5)	Black	N/A
		1999 - 2016	BEL	0P017000 and up			
40E / EL	2 cyl.(Japanese Origin) Without oil injection.			6E9 Series and up	95419A 1(3)	Gray	N/A
40E / EL	2 cyl.(Japanese Origin) With oil injection.			6E9 Series and up	95419A 1(4)	Gray	N/A
40	3 cylinder.	1997 1/2 - 1998	USA	0G531301 - 0G760299	828813A29(2)(4)	Black	N/A
			BEL	9973100 - 0P016999			
40	3 cylinder.	1997 1/2 - 1998	USA	0G531301 - 0G760299	828813A29(2)(4)(9)	Black	N/A
			BEL	9973100 - 0P016999			
40	3 cylinder.	1999 - 2005	USA	0G760300 - 1B226999	828813A29(2)(4)	Black	N/A

OUTBOARD

Model	Model Notes	Year Range		Serial # Range	Tiller Handle Kit Part Number	Handle Color	Shift Attaching Kit
40	3 cylinder.	1999 - 2016	BEL	0P017000 and up	828813A29(2)(4)	Black	N/A
40 FourStroke	3 cyl. Carb	1999 - 2005	USA	0G760300 - 1B226999	821455A22(2)	Black	N/A
			BEL	0P094500 - 0P400999			
40 FourStroke	3 cyl. EFI	2002 - 2005	USA	0T409000 - 1B226999	821455A16(2)	Black	N/A
			BEL	0P153500 - 0P400999			
40 FourStroke	3 cyl. Manual-Short Shaft	2006	USA	1B227000 - 1B344398	821455A22(10)	Black	N/A
	3 cyl. EFI-Short Shaft	2006	USA	1B227000 - 1B344398	821455A17(2)(10)	Black	N/A
	3 cyl. EFI-Short Shaft only	2006	BEL	0P401000 - 0P515896	821455A17(2)(10)	Black	N/A
	3 cyl. EFI-Long Shaft	2006	CHN	1C000001 - 1C049738	821455A24(11)	Black	N/A
	3 cyl. EFI-Long Shaft	2006	BEL	0P401000 - 0P515896	821455A24(11)	Black	N/A
40 FourStroke	3 cyl. EFI	2007 - 2016	CHN	1C049739 and up	880093A03	Black	N/A
40 FourStroke	4 cylinder with Standard Gearcase	1996 - 1998	USA	0G231123 - 0G760299	828813A 2	Black	N/A
					(9)	Gray	N/A
40 FourStroke	4 cylinder with BigFoot Gearcase	1996 - 1998	USA	0G231123 - 0G760299	N.L.A.	Black	N/A
					(9)	Gray	N/A
40 FourStroke	4 cylinder with Standard Gearcase	1999 - 2000	USA	0G760300 - 0T178499	828813A 2	Black	N/A
40 FourStroke	4 cylinder with BigFoot Gearcase	1999 - 2000	USA	0G760300 - 0T178499	N.L.A.	Black	N/A
40 FourStroke	4 cylinder Carb Model w/ BigFoot Gearcase 996 cc.	2001	USA	0T178500 - 0T408999	880095A 1	Black	N/A
			BEL	0P094500 - 0P153499			
40 FourStroke	4 cylinder EFI Model w/ BigFoot gearcase 996 cc.	2002 - 2005	USA	0T409000 - 1B226999	880095A05	Black	N/A
			BEL	0P153500 - 0P400999			
40 FourStroke	4 cylinder EFI Mode w/BigFoot gearcase 996 cc.l	2006	USA	1B227000 - 1B344306	880095A04	Black	N/A
			BEL	0P401000 - 0P515896			
40 FourStroke	4 cylinder EFI Mode w/BigFoot gearcase 996 cc.l	2006	CHN	1C000001 - 1C050251	880095A04	Black	N/A
40 FourStroke	4 cylinder EFI, Traditional Tiller	2007 - 2016	CHN	1C050252 and up	880093A03	Black	N/A
	Big Tiller for RC Models				879291A04(16)	Black	N/A
	Big Tiller for H Models				879291A05(16)	Black	N/A
40 JET		2001 - 2016	USA	0T178500 and up	816366A48(2)	Black	850000A 2
			BEL	0P094500 and up			
40 JET FourStroke	4 cylinder EFI	2007 - 2016	CHN	1C051324 and up	889246A37	Black	N/A
45	4 cyl. w/2 pc steering arm & 2 trim cylinders	1989	USA	0C159200 and up	N.L.A.(2)	Black	N/A
			BEL	9570790 and up			
45 FourStroke	4 cylinder with Standard Gearcase	1996 - 1998	USA	0G231123 - 0G760299	828813A 2	Black	N/A
45 FourStroke	4 cylinder with BigFoot Gearcase	1996 - 1998	USA	0G231123 - 0G760299	N.L.A.	Black	N/A
45 FourStroke	4 cylinder with Standard Gearcase	1999 - 2000	USA	0G760300 - 0T178499	828813A 2	Black	N/A
45 FourStroke	4 cylinder with BigFoot Gearcase	1999 - 2000	USA	0G760300 - 0T178499	N.L.A.	Black	N/A
45 Jet		1994 - 1998	USA	0D182000 - 0G760299	N.L.A.(2)	Black	850000A 2
					N.L.A.(9)	Gray	850000A 2
45 Jet		1999 - 2000	USA	0G760300 - 0T178499	816366A48(2)	Black	850000A 2
50	Models w/2 pc steering arm & 2 trim cylinders	Prior to - 1989 1/2	USA	Prior to - 0C160935	N.L.A.(2)	Black	N/A
			BEL	Prior to - 9469199			
50	Models w/2 pc steering arm & single trim cylinder	1989 1/2 - 1990	USA	0C160936 - 0D042363	N.L.A.(2)	Black	N/A
			BEL	9469200 - 9671686			
50	51.8 CID	1991 - 1997	USA	0D042364 - 0G589999	N.L.A.(2)	Black	N/A
			BEL	9671687 - 9973099			
50	51.8 CID	1991 - 1997	USA	0D042364 - 0G589999	N.L.A.(9)	Gray	N/A
			BEL	9671687 - 9973099			
50	59 CID	1998	USA	0G590000 - 0G760299	828813A29(2)(4)	Black	N/A
			BEL	9973100 - 0P016999			
50	59 CID	1998	USA	0G590000 - 0G760299	828813A29(2)(4)(9)	Black	N/A
			BEL	9973100 - 0P016999			
50		1999 - 2016	USA	0G760300 and up	828813A29(2)(4)	Black	N/A
		1999 - 2016	BEL	0P017000 and up			

Model	Model Notes	Year Range		Serial # Range	Tiller Handle Kit Part Number	Handle Color	Shift Attaching Kit
50 FourStroke	4 cylinder with Standard Gearcase	1996 - 1998	USA	0G231123 - 0G760299	828813A 2	Black	N/A
50 FourStroke	4 cylinder with BigFoot Gearcase	1996 - 1998	USA	0G231123 - 0G760299	N.L.A.	Black	N/A
					(9)	Gray	N/A
50 FourStroke	4 cylinder with Standard Gearcase	1999 - 2000	USA	0G760300 - 0T178499	828813A 2	Black	N/A
50 FourStroke	4 cylinder with BigFoot gearcase	1999 - 2000	USA	0G760300 - 0T178499	N.L.A.	Black	N/A
50 FourStroke	4 cylinder, Carbureted, 996 cc.	2001	USA	0T178500 - 0T408999	880095A 1	Black	N/A
			BEL	0P094500 - 0P253499			
50 FourStroke	4 cylinder, EFI, 996 cc.	2002 - 2005	USA	0T409000 - 1B226999	880095A05	Black	N/A
			BEL	0P153500 - 0P400999			
50 FourStroke	4 cylinder, EFI, 996 cc.	2006	USA	1B227000 - 1B344306	880095A04	Black	N/A
			BEL	0P400999 - 0P515896			
50 FourStroke	4 cylinder, EFI, 996 cc.	2006	CHN	1C000001 - 1C050251	880095A04	Black	N/A
50 FourStroke	4 cylinder EFI, Traditional Tiller	2007 - 2016	CHN	1C050252 and up	880093A03	Black	N/A
	Big Tiller for RC Models				879291A04(16)	Black	N/A
	Big Tiller for H Models				879291A05(16)	Black	N/A
60	Models w/2 pc steering arm & 2 trim cylinders	Prior to - 1989 1/2	USA	Prior to - 0C160935	N.L.A.(2)	Black	N/A
			BEL	Prior to - 9469199			
60	Models w/2 pc steering arm & single trim cylinder	1989 1/2 - 1990	USA	0C160936 - 0D042363	N.L.A.(2)	Black	N/A
			BEL	9469200 - 9671686			
60		1991 - 1998	USA	0D042364 - 0G760299	N.L.A.(2)	Black	N/A
			BEL	9671687 - 0P016999			
60		1991 - 1998	USA	0D042364 - 0G760299	N.L.A.(9)	Gray	N/A
			BEL	9671687 - 0P016999			
60		1999 - 2016	USA	0G760300 and up	816366A48(2)	Black	N/A
			BEL	0P017000 and up			
60 FourStroke	4 cylinder, Carbureted, 996 cc.	2001	USA	0T178500 - 0T408999	880095A 1	Black	N/A
			BEL	0P094500 - 0P153499			
60 FourStroke	4 cylinder, EFI, 996 cc.	2002 - 2005	USA	0T409000 - 1B226999	880095A05	Black	N/A
			BEL	0P153500 - 0P400999			
60 FourStroke	4 cylinder, EFI, 996 cc.	2006	USA	1B227000 - 1B344306	880095A04	Black	N/A
			BEL	0P400999 - 0P515896			
60 FourStroke	4 cylinder, EFI, 996 cc.	2006	CHN	1C000001 - 1C050251	880095A04	Black	N/A
60 FourStroke	4 cylinder EFI, Traditional Tiller	2007 - 2016	CHN	1C050252 and up	880093A03	Black	N/A
	Big Tiller for RC Models				879291A04(16)	Black	N/A
	Big Tiller for H Models				879291A05(16)	Black	N/A
65 Jet	3 cylinder	1993 - 1996	USA	0D182000 - 0G449550	N.L.A.	Black	850000A 3
					N.L.A.	Gray	850000A 3
65 Jet	3 cylinder	1997 - 1998	USA	0G449551 - 0G760299	12022A40	Black	850000A 3
					(9)	Gray	850000A 3
65 Jet	3 cylinder	1999 - 2016	USA	0G760300 and up	12022A40	Black	850000A 3
75		1993 - 1996	USA	0D182000 - 0G449550	N.L.A.	Black	N/A
			BEL	9742452 - 9934127			
75		1993 - 1996	USA	0D182000 - 0G449550	(9)	Gray	N/A
			BEL	9742452 - 9934127			
75		1997 - 2016	USA	0G449551 and up	12022A40	Black	N/A
			BEL	9934128 and up			
75 Optimax	1.5L, DFI	2005	USA	0T980000 - 1B226999	896648A07	Black	N/A
75 Optimax	1.5L, DFI	2006 - 2016	USA	1B227000 and up	896648A09	Black	N/A
	Big Tiller, Power Steering				8M0094637	Black	N/A
	Big Tiller, non-Power Steer				8M0093581	Black	N/A
75 FourStroke	4 cyl. Carb	2000 - 2003	USA	OG960500 - 0T800749	816366A42	Black	N/A
75 FourStroke	4 cyl. Carb w/EZ shift gearcase	2004 - 2005	USA	0T800750 - 1B226999	816366A32 (17)	Black	N/A
75 FourStroke	4 cylinder, EFI	2005	USA	0T980000 - 1B226999	N.L.A.(8)	Black	N/A

OUTBOARD

Model	Model Notes	Year Range		Serial # Range	Tiller Handle Kit Part Number	Handle Color	Shift Attaching Kit
75 FourStroke	4 cylinder, EFI	2006	USA	1B227000 - 1B366822	N.L.A.	Black	N/A
75 FourStroke, 1.7L	4 cylinder, EFI, Traditional Tiller	2006 - 2014	USA	1B366823 - 2B094955	816366A52	Black	N/A
	Big Tiller, Power Steering				8M0094637(16)	Black	N/A
	Big Tiller, non-Power Steer				8M0093581(16)	Black	N/A
80 Jet	4 cylinder	1997 - 1998	USA	0G449551 - 0G760299	12022A41	Black	850000A 3
80 Jet	4 cylinder	1997 - 1998	USA	0G449551 - 0G760299	12022A41	Black	850000A 3
80 Jet	4 cylinder	1999 - 2006	USA	0G760300 - 1B261437	12022A41	Black	850000A 3
90		1993 - 1996	USA	0D182000 - 0G449550	N.L.A.	Black	N/A
			BEL	9742452 - 9934127			
90		1993 - 1996	USA	0D182000 - 0G449550	(9)	Gray	N/A
			BEL	9742452 - 9934127			
90		1997 - 2016	USA	0G449551 and up	12022A40	Black	N/A
			BEL	9934128 and up			
90 Optimax	1.5L, DFI	2005	USA	0T980000 - 1B226999	896648A07	Black	N/A
90 Optimax	1.5L, DFI	2006 - 2016	USA	1B227000 and up	896648A09	Black	N/A
	Big Tiller, Power Steering				8M0094637(16)	Black	N/A
	Big Tiller, non-Power Steer				8M0093581(16)	Black	N/A
90 FourStroke	4 cyl. Carb	2000 - 2003	USA	OG960500 - 0T800749	816366A42	Black	N/A
90 FourStroke	4 cyl. Carb w/EZ shift gearcase	2004 - 2005	USA	0T800750 - 1B226999	816366A32 (17)	Black	N/A
90 FourStroke	4 cylinder, EFI	2005	USA	0T980000 - 1B226999	N.L.A.(8)	Black	N/A
90 FourStroke	4 cylinder, EFI	2006	USA	1B227000 - 1B366822	N.L.A.	Black	N/A
90 FourStroke, 1.7L	4 cylinder, EFI, Traditional Tiller	2006 - 2014	USA	1B366823 - 2B094955	816366A52	Black	N/A
	Big Tiller, Power Steering				8M0094637(16)	Black	N/A
	Big Tiller, non-Power Steer				8M0093581(16)	Black	N/A
100		1997 - 1999	USA	0G449551 - 0G965520	12022A41	Black	N/A
			BEL	9934128 - 0P058999			
115		1997 - 2016	USA	0G449551 and up	12022A41	Black	N/A
			BEL	9934128 and up			
115 Optimax	1.5L, DFI	2004 - 2005	USA	0T801000 - 1B226999	896648A07	Black	N/A
115 Optimax	1.5L, DFI	2006 - 2016	USA	1B227000 and up	896648A09	Black	N/A
	Big Tiller, Power Steering				8M0094637(16)	Black	N/A
	Big Tiller, non-Power Steer				8M0093581(16)	Black	N/A
115 FourStroke	EFI	2001 - 2003	USA	0T178500 - 0T800749	816366A42	Black	N/A
115 FourStroke	EFI	2004 - 2005	USA	0T800750 - 1B226999	816366A32 (17)	Black	N/A
115 FourStroke	EFI	2006	USA	1B227000 - 1B366822	N.L.A.	Black	N/A
115 FourStroke, 1.7L	EFI	2006 - 2014	USA	1B366823 - 2B094955	816366A52	Black	N/A
	Big Tiller, Power Steering				8M0094637(16)	Black	N/A
	Big Tiller, non-Power Steer				8M0093581(16)	Black	N/A
125		1997 - 2016	USA	0G449551 and up	12022A41	Black	N/A
			BEL	9934128 and up			
150 EFI FourStroke	Non-DTS, Big Tiller, Power Steering	2011 - 2016	USA		8M0061721(16)	Black	N/A
135-250 Optimax	Non-DTS, Big Tiller, Power Steering	2006 - 2016	USA	1B227000 and up	8M0094637(16)	Black	N/A

Model	Model Notes	Year Range		Serial # Range	Tiller Handle Kit Part Number	Handle Color	Shift Attaching Kit
135-200 L4 Verado	DTS, Big Tiller, Power Steering	2006 - 2016	USA	1B227000 and up	8M0098585(16)	Black	N/A

(1) Tiller handle harness button 87-823609A 7 or transom mounted keyswitch 15000A 7 required to complete conversion.

(2) Conversion of power trim models will require a suitable power trim switch.

(3) Keyswitch panel 47974A10 required to complete conversion.

(4) Transom mounted ignition keyswitch 15000A 7 required to complete conversion.

(5) Transom mounted ignition keyswitch 15000A 7 and neutral interlock 87-813960A 4 required to complete conversion.

(8) On-engine adapter harness 84-858740T06 also required.

(9) Gray kits are no longer available.

(10) Has Vertical actuated shift.

(11) Has Rotary actuated shift.

(12) Converts an MRC to an MH model.

(13) Converts an ERC to an EH model. PT models may require trim switch. See part record.

(14) Engines requiring SAE style ended throttle/shift cables.

(15) Engines requiring Mercury style ended throttle/shift cables.

(16) Order Throttle/Shift cables separate depending on engine application.

(17) Available at Seaway Marine 206-937-7373 (USA) or seawaymarine.com

CO-PILOT KIT

Stabilizes or restricts engine when placed in a full tilt position to aid in keeping it from bouncing and contacting other surrounding surfaces.

CO-PILOT KIT



52148A 1

Intended for use on models that are not originally furnished with co-pilot components. 20/25 hp. installation also requires Tiller Handle Bracket p/n 98571A 3. The owner's manual should be consulted for important steering friction information.

Fits Mercury/Mariner 8 hp. FourStroke (MY2001-2004), 9.9 hp. FourStroke (MY1999-2004), 15 hp. FourStroke (MY 1999-2007, 323cc), 20/25 hp. 2 cycle (1984 and Newer) and Mariner 30/40 (2 cyl., Japanese origin).

CO-PILOT KIT



898103A92

Intended for use on models that are not originally furnished with co-pilot components. The owner's manual should be consulted for important steering friction information.

Fits Mercury/Mariner 25 hp. & 30 hp. EFI FourStroke outboards (JPN 0R106999 & above, BEL 0P401000 & above).

SAIL CO-PILOT KIT



8M0097129

Locks the engine in the straight position, allowing boat to be steered with auxiliary rudder.

F4/5/6 hp Sail-Power outboards.

TILLER HANDLE BRACKET

Provides attaching point for some co-pilot kits.

TILLER HANDLE BRACKET



98571A 3

Fits Mercury/Mariner 20/25 hp. 2 cycle outboards using a p/n 52148A 1 Co-Pilot kit.

STEERING BRACKET WITHOUT CARRYING HANDLE

Used with single RideGuide steering to convert tiller handle models to remote steering.

STEERING BRACKET WITHOUT CARRYING HANDLE



816667A 2

Fits Mercury/Mariner 30/40 hp. (2 cyl.) 2 cycle outboards (USA 0G055314 and Newer, BEL 9854537 and Newer) and 25/30/40/45/50 hp. 4-Stroke outboards.

OUTBOARD RIGGING HOSE KIT

Used to enclose remote harness, hoses, cables, etc. between engine cowl and boat transom.

RIGGING TUBE KIT



32-8M0062693

Rigging Tube kit includes 5 ft length (2 in. dia. x 2.3 threads per inch) tube that screws into the fitting coming out of the engine. Includes new grommet 8M0061160 that is used when installing rigging tubes. Remove existing grommet from cowl and replace with this grommet..

Used on 150 EFI 4-Stroke engine only

32-825191A03

Rigging Tube kit includes 5 ft length (2 in. dia. x 2.3 threads per inch) tube that screws into the fitting coming out of the Verado. If OptiMax engine, requires the use of the clamp to attach to fitting coming out of engine. Included in the kit is plastic transom fitting that screws to the tube and can be fastened to the boat.

2005 and newer Verado engines as well as all Opti Max engines

RIGGING HOSE



32-859055 5

Replacement Hose, 2 in. dia. x 2.3 threads per inch, furnished in a 5 ft. length.

Fits various Mercury / Mariner V-6 outboards. See application chart for specific engine models.

32-859055 50

Replacement Hose, furnished in a 50 ft. bulk length that can be cut to required length.

Fits various Mercury / Mariner V-6 outboards. See application chart for specific engine models.

Priced individually, sold @ multiples of 2

COWL FITTING



875266A 2

Used on engine end of rigging hose.

Fits various Mercury / Mariner V-6 outboards. Furnished standard with the engines beginning with model year 2,000. See application chart for specific engine models.

COWL FITTING



8M8027677

Used on engine end of rigging hose.

Fits various Mercury / Mariner V-6 outboards. Furnished standard with the engines beginning with model year 2,000.

RIGGING TUBE KIT



32-842756T01

Mercury Racing version, the cowl fitting bolts firmly into place. Because the 2-1/2 inch tubing threads into the one piece couplers instead of over them, greater clearance is achieved for outboard rigging hardware including throttle cables, electronics cables, steering lines, and fuel lines. The durable hose and one piece couplers provide a complete seal at both the engine and boat ends. Hose length is 5 feet.

Fits all production 3.0 liter V-6 EFI and OptiMax cowls as well as Racing 3.0 liter OptiMax cowls.

RIGGING HOSES CHART - MERCURY/MARINER

Mercury/Mariner Rigging Hoses

Model	Brand	Year Range	Country	Serial # Range	Rigging Hose Kit Part Number	Cowl Fitting Required
2.0L V-6	Mercury/Mariner	1996 - 1999	USA	0G303046 - 0G949999	32-825191A03	875266A 2
2.0L V-6	Mercury/Mariner	2000 - 2016	USA	0T065504 and up	32-825191A03	Incl. With Engine
2.5L V-6	Mercury/Mariner	1996 - 1999	USA	0G303046 - 0G949999	32-825191A03	875266A 2
2.5L V-6	Mercury/Mariner	2000 - 2016	USA	0T065504 and up	32-825191A03	Incl. With Engine
2.5L OPTIMAX	Mercury/Mariner	1998 - 1999	USA	0G590000 - 0G949999	32-825191A03	875266A 2
2.5L OPTIMAX	Mercury/Mariner	2000 - 2016	USA	0T065504 and up	32-825191A03	Incl. With Engine
3.0L V-6	Mercury/Mariner	1994 - 1999	USA	0D280813 - 0G949999	32-825191A03	875266A 2
3.0L V-6	Mercury/Mariner	2000 - 2016	USA	0T014000 and up	32-825191A03	Incl. With Engine
3.0L DFI	Mercury/Mariner	1997	USA	0G386496 - 0G589999	32-825191A03	875266A 2
3.0L OPTIMAX	Mercury/Mariner	1998 - 1999	USA	0G590000 - 0G949999	32-825191A03	8M8027677
3.0L OPTIMAX	Mercury/Mariner	2000 - 2016	USA	0T014000 and up	32-825191A03	Incl. With Engine
225 EFI FourStroke	Mercury/Mariner	2003 - 2016	USA	0T635945 and up	32-825191A03	Incl. With Engine
Verado	Mercury/Mariner	2005 - 2016	USA	0T980000 and up	32-825191A03	Incl. With Engine
150 EFI FourStroke	Mercury/Mariner	2011 - 2016	USA	1B905505 and up	32-8M0062693	Incl. With Engine

SHALLOW WATER DRIVE KIT

Provides a tilt mechanism to allow for trolling or low speed running in the sixth tilt pin position.

SHALLOW WATER DRIVE KIT



12756A 1

This kit is designed to be added to remote control models. It is furnished standard on the tiller handle models.

Fits Mercury/Mariner 20/25 hp. 2 cycle models (1986 and Newer), 9.9 hp. FourStroke models (1999-2004) and 15 hp. FourStroke (323cc).

SIDESHIFT CONVERSION KIT

Converts a tiller handle shift to a side shift.

SIDESHIFT CONVERSION KIT



821190A 1

1992 and older.

Fits Mercury / Mariner 6-15 hp. 2 cycle outboards (USA 0A197112-0D181999, BEL 9461526-9740999).

821190A 3

1993 and newer.

Fits Mercury/Mariner 6-15 hp. 2 cycle outboards (USA 0D182000 and Newer, BEL 9741000 and Newer).

SIDESHIFT CONVERSION KIT



821190A 2

1994 1/2 and newer.

Fits Mercury/Mariner 20/25 hp. 2 cycle outboards (USA 0G044027 and Newer, BEL 9807909 and Newer).

EXTENSION KIT - 5 INCH (127MM)

A motor leg spacer kit providing 5" (127mm) of extension.

DRIVESHAFT EXTENSION KIT



853783A06

Painted black, converts 20" (508mm) to 25" (635mm).

Fits Mercury 9.9 hp. FourStroke outboards with Standard gearcase, Model Year 2005 and newer.

5 INCH EXTENSION KIT



853783A05

Painted black, converts 20" (508mm) to 25" (635mm).

Fits Mercury/Mariner 9.9 hp. FourStroke, Model Year 2005 & newer, with BigFoot gearcase.

5 INCH EXTENSION KIT



12092A13

Painted black, converts 20" (508mm) to 25" (635mm).

Fits various Mercury 70-125 hp. 2 cycle outboards (1998) and Mercury / Mariner 70-125 hp. 2 cycle outboards (1999 and Newer). See application chart for specific engine models.

5 INCH EXTENSION KIT



12092A18

Painted black, converts 20" (508 mm) to 25" (635 mm).

Fits Mercury/Mariner 40/50/60 Bigfoot FourStroke outboards (USA 0T178500-1B344306 & BEL 0P094500-0P400999).

5 INCH EXTENSION KIT



12092A19

Painted black, converts 20" (508 mm) to 25" (635 mm).

Fits Mercury/Mariner 75/90/115 FourStroke (1.7L) outboards with serial number USA 1B366823-2B094955.

5 INCH EXTENSION KIT



12092A20

Painted black, converts 20" (508 mm) to 25" (635 mm).

Fits Mercury/Mariner 40/50/60 Bigfoot FourStroke outboards (CHN 1C050252 & above, BEL 0P401000 & above)

5 INCH EXTENSION KIT



8M0105089

Painted, converts 20 in. (508MM) to 25 in. (635MM).

Fits Mercury/Mariner 75-115 FourStroke (2.1L) standard gearcase outboards beginning with serial number USA 2B094996 & Up.

NEW

5 INCH EXTENSION KIT



8M0105090

Painted, converts 20 in. (508MM) to 25 in. (635MM).

Fits Mercury/Mariner 75-115 FourStroke (2.1L) Command Thrust (CT) gearcase outboards beginning with serial number USA 2B094996 & Up.

NEW

5 INCH EXTENSION KIT



8M0105087

Converts 20 inch (508mm) L model to a 25 inch (635mm) XL model.

Fits the Mercury/Mariner F150 hp. EFI FourStroke 4 cylinder outboard.

EXTENSION KIT - 2 1/2 INCH (64MM)

A motor leg spacer kit providing 2 1/2" (64mm) of extension.

2 1/2 INCH EXTENSION KIT



824072A 7

Painted black, converts 20 in. (508mm) to 22 1/2 in. (572mm).

Fits Mercury/Mariner 25 hp. FourStroke outboards, carb models (MY1998-2005).

2 1/2 INCH EXTENSION KIT



824072A 3

Painted black, converts 20 in. (508mm) to 22 1/2 in. (572mm).

Fits various Mercury/Mariner 30-50 hp. 2 cycle outboards. See application chart for specific engine models.

2 1/2 INCH EXTENSION KIT



816696A 1

Painted black, converts 20 in. (508mm) to 22 1/2 in. (572mm).

Fits various Mercury/Mariner 50/55/60 hp. 2 cycle outboards. See application chart for specific engine models.

2 1/2 INCH EXTENSION KIT



816696A 8

Painted Black, converts 20 in. (508mm) to 22 1/2 in. (572mm).

Fits various Mercury 70-125 hp. 2 cycle outboards (1994-1997). See application chart for specific engine models.

816696A 9

Painted gray, converts 20 in. (508mm) to 22 1/2 in. (572mm).

Fits various Mariner 70-125 hp. 2 cycle outboards (1994-1997). See application chart for specific engine models.

OUTBOARD

2 1/2 INCH EXTENSION KIT



816696A10

Painted black, converts 20 in. (508mm) to 22 1/2 in. (572mm).

Fits various Mercury/Mariner 75-125 hp. 2 cycle outboards (1998) and Mercury/Mariner 75-125 hp. 2 cycle outboards (1999 and Newer). See application chart for specific engine models. A gray painted extension is no longer available for Mariner product.

2 1/2 INCH EXTENSION KIT



816696A12

Painted black, converts 20 in. (508 mm) to 22 1/2 in. (572 mm).

Fits Mercury/Mariner 40/50/60 (4 cyl.) FourStroke standard gearcase outboards (USA 0T178500-1B344306, CHN 1C000001-1C050251, BEL 0P094500-0P515896).

2 1/2 INCH EXTENSION KIT



879150A88

Painted black, converts 20 in. (508 mm) to 22 1/2 in. (572 mm).

Fits Mercury/Mariner 50/60 (4 cyl.) FourStroke standard gearcase outboards (CHN 1C050252 and above, BEL 0P515897 and above).

DRIVESHAFT EXTENSION CHART

Mercury/Mariner/Force/Chrysler Extension Kits

Model	Brand	Model Note	Year Range		Serial # Range	Converts 15 Inch (381 mm) To 20 Inch (508 mm)	Converts 20 Inch (508 mm) To 22 1/2 Inch (572 mm)	Converts 20 Inch (508 mm) To 25 Inch (635 mm)	Color
3.5	Chrysler			USA		N.L.A.	N/A	N/A	Unpainted
4	Chrysler			USA		N.L.A.	N/A	N/A	Unpainted
4	Force		1984 - 1987	USA	E000001 and up	N.L.A.	N/A	N/A	Unpainted
4	Mercury	With thru hub exhaust	1987 - 1998	USA	0A809601 - 0G710612	N.L.A.	N/A	N/A	Black
4	Mercury	With thru hub exhaust	1987 - 1998	BEL	9477830 - 0P016999	N.L.A.	N/A	N/A	Black
4	Mariner	With thru hub exhaust	1987 - 1998	USA	0A809601 - 0G710613	N.L.A.	N/A	N/A	Black
4	Mariner	With thru hub exhaust	1987 - 1998	BEL	9477830 - 0P016999	N.L.A.	N/A	N/A	Black
4	Mercury/Mariner		1999 - 2016	USA	0G710613 and up	N.L.A.	N/A	N/A	Black
4	Mercury/Mariner		1999 - 2016	BEL	0P017000 and up	N.L.A.	N/A	N/A	Black
4 FourStroke	Mercury/Mariner		1999 - 2016	JPN	0R000001 and up	N.L.A.	N/A	N/A	Black
4 FourStroke	Mercury/Mariner		1999 - 2016	BEL	0P073456 and up	N.L.A.	N/A	N/A	Black
5	Force		1988 - 2016	USA	E000001 and up		N/A	N/A	Unpainted
5	Mercury	With thru hub exhaust	1987 - 1998	USA	0A809601 - 0G710612	N.L.A.	N/A	N/A	Black
5	Mercury	With thru hub exhaust	1987 - 1998	BEL	9477830 - 0P016999	N.L.A.	N/A	N/A	Black
5	Mariner	With thru hub exhaust	1987 - 1998	USA	0A809601 - 0G710612	N.L.A.	N/A	N/A	Black
5	Mariner	With thru hub exhaust	1987 - 1998	BEL	9477830 - 0P016999	N.L.A.	N/A	N/A	Black
5	Mercury/Mariner		1999 - 2016	USA	0G710613 and up	N.L.A.	N/A	N/A	Black
5	Mercury/Mariner		1999 - 2016	BEL	0P017000 and up	N.L.A.	N/A	N/A	Black

Model	Brand	Model Note	Year Range		Serial # Range	Converts 15 Inch (381 mm) To 20 Inch (508 mm)	Converts 20 Inch (508 mm) To 22 1/2 Inch (572 mm)	Converts 20 Inch (508 mm) To 25 Inch (635 mm)	Color
5 FourStroke	Mercury/Mariner		1999 - 2016	JPN	0R000001 and up	N.L.A.	N/A	N/A	Black
5 FourStroke	Mercury/Mariner		1999 - 2016	BEL	0P073456 and up	N.L.A.	N/A	N/A	Black
6	Mercury		1986 - 1993	USA	0A197112 - 0D280999	N/A	N/A	N.L.A.	Black
6	Mercury		1986 - 1993	BEL	9461526 - 9792199	N/A	N/A	N.L.A.	Black
6	Mariner		1986 - 1993	USA	0A197112 - 0D280999	N/A	N/A	N.L.A.	Black
6	Mariner		1986 - 1993	BEL	9461526 - 9792199	N/A	N/A	N.L.A.	Black
6	Mercury		1994	USA	0D281000 - 0G077360	N/A	N/A	N.L.A.	Black
6	Mercury		1994	BEL	9792200 - 9831799	N/A	N/A	N.L.A.	Black
6	Mariner		1994	USA	0D281000 - 0G077360	N/A	N/A	N.L.A.	Gray
6	Mariner		1994	BEL	9792200 - 9831799	N/A	N/A	N.L.A.	Gray
6	Mercury		1995 - 1998	USA	0G077361 - 0G760299	N/A	N/A	N.L.A.	Black
6	Mercury		1995 - 1998	BEL	9831800 - 0P016999	N/A	N/A	N.L.A.	Black
6	Mariner		1995 - 1998	USA	0G077361 - 0G760299	N/A	N/A	N.L.A.	Gray
6	Mariner		1995 - 1998	BEL	9831800 - 0P016999	N/A	N/A	N.L.A.	Gray
6	Mercury/Mariner		1999 - 2003	USA	0G760300 - 0T800749	N/A	N/A	N.L.A.	Black
6	Mercury/Mariner		1999 - 2003	BEL	0P017000 and up	N/A	N/A	N.L.A.	Black
6 FourStroke	Mercury/Mariner		1999 - 2016	JPN	0R000001 and up	N.L.A.	N/A	N/A	Black
6 FourStroke	Mercury/Mariner		1999 - 2016	BEL	0P073456 and up	N.L.A.	N/A	N/A	Black
8	Mercury		1986 - 1993	USA	0A197112 - 0D280999	N/A	N/A	N.L.A.	Black
8	Mercury		1986 - 1993	BEL	9461526 - 9792199	N/A	N/A	N.L.A.	Black
8	Mariner		1986 - 1993	USA	0A197112 - 0D280999	N/A	N/A	N.L.A.	Black
8	Mariner		1986 - 1993	BEL	9461526 - 9792199	N/A	N/A	N.L.A.	Black
8	Mercury		1994	USA	0D281000 - 0G077360	N/A	N/A	N.L.A.	Black
8	Mercury		1994	BEL	9792200 - 9831799	N/A	N/A	N.L.A.	Black
8	Mariner		1994	USA	0D281000 - 0G077360	N/A	N/A	N.L.A.	Gray
8	Mariner		1994	BEL	9792200 - 9831799	N/A	N/A	N.L.A.	Gray
8	Mercury		1995 - 1998	USA	0G077361 - 0G760299	N/A	N/A	N.L.A.	Black
8	Mercury		1995 - 1998	BEL	9831800 - 0P016999	N/A	N/A	N.L.A.	Black
8	Mariner		1995 - 1998	USA	0G077361 - 0G760299	N/A	N/A	N.L.A.	Gray
8	Mariner		1995 - 1998	BEL	9831800 - 0P016999	N/A	N/A	N.L.A.	Gray
8	Mercury/Mariner		1999 - 2006	USA	0G760300 and up	N/A	N/A	N.L.A.	Black
8	Mercury/Mariner		1999 - 2006	BEL	0P017000 and up	N/A	N/A	N.L.A.	Black
8 FourStroke	Mercury	232 CC.	1995 - 1998	USA	0H000058 - 0H017099	N/A	N/A	N.L.A.	Black
8 FourStroke	Mariner	232 CC.	1995 - 1998	USA	0H000058 - 0H017099	N/A	N/A	N.L.A.	Gray
8 FourStroke	Mercury/Mariner	232 CC.	1999	USA	0H017100 - 0H017349	N/A	N/A	N.L.A.	Black
8 FourStroke	Mercury/Mariner	232 CC.	1999 - 2000	USA	0G760300 and up	N/A	N/A	N.L.A.	Black
8 FourStroke	Mercury/Mariner	323 CC.	2001 - 2004	BEL	0P086824 - 0P325499	N/A	N/A	N.L.A.	Black
8 FourStroke	Mercury/Mariner		2005 - 2016	JPN	0R042475 and up	N/A	N/A	853783A06	Black
8 FourStroke	Mercury/Mariner		2005 - 2016	BEL	0P325500 and up	N/A	N/A	853783A06	Black
9.9	Chrysler	Low profile only.		USA		N.L.A.	N/A	N/A	N/A
9.9	Force	Low profile only.		USA	E000001 and up	N.L.A.	N/A	N/A	N/A
9.9	Mercury		1986 - 1993	USA	0A197112 - 0D280999	N/A	N/A	N.L.A.	Black
9.9	Mercury		1986 - 1993	BEL	9461526 - 9792199	N/A	N/A	N.L.A.	Black
9.9	Mariner		1986 - 1993	USA	0A197112 - 0D280999	N/A	N/A	N.L.A.	Black
9.9	Mariner		1986 - 1993	BEL	9461526 - 9792199	N/A	N/A	N.L.A.	Black
9.9	Mercury		1994	USA	0D281000 - 0G077360	N/A	N/A	N.L.A.	Black
9.9	Mercury		1994	BEL	9792200 - 9831799	N/A	N/A	N.L.A.	Black
9.9	Mariner		1994	USA	0D281000 - 0G077360	N/A	N/A	N.L.A.	Gray
9.9	Mariner		1994	BEL	9792200 - 9831799	N/A	N/A	N.L.A.	Gray
9.9	Mercury		1995 - 1998	USA	0G077361 - 0G760299	N/A	N/A	N.L.A.	Black
9.9	Mercury		1995 - 1998	BEL	9831800 - 0P016999	N/A	N/A	N.L.A.	Black
9.9	Mariner		1995 - 1998	USA	0G077361 - 0G760299	N/A	N/A	N.L.A.	Gray
9.9	Mariner		1995 - 1998	BEL	9831800 - 0P016999	N/A	N/A	N.L.A.	Gray

OUTBOARD

Model	Brand	Model Note	Year Range		Serial # Range	Converts 15 Inch (381 mm) To 20 Inch (508 mm)	Converts 20 Inch (508 mm) To 22 1/2 Inch (572 mm)	Converts 20 Inch (508 mm) To 25 Inch (635 mm)	Color
9.9	Mercury/Mariner		1999 - 2006	USA	0G760300 and up	N/A	N/A	N.L.A.	Black
9.9	Mercury/Mariner		1999 - 2006	BEL	0P017000 and up	N/A	N/A	N.L.A.	Black
9.9 FourStroke	Mercury	232 CC.	1995 - 1998	USA	0H000058 - 0H016909	N/A	N/A	N.L.A.	Black
9.9 FourStroke	Mariner	232 CC.	1995 - 1998	USA	0H000058 - 0H016909	N/A	N/A	N.L.A.	Gray
9.9 FourStroke	Mercury/Mariner	323 CC.	1999 - 2004	USA	0G760300 - 0T979999	N/A	N/A	N.L.A.	Black
9.9 FourStroke	Mercury/Mariner	323 CC.	1999 - 2004	BEL	0P075166 - 0P325499	N/A	N/A	N.L.A.	Black
9.9 FourStroke	Mercury/Mariner	Standard Gearcase	2005 - 2016	JPN	0R042475 and up	N/A	N/A	853783A06	Black
9.9 FourStroke	Mercury/Mariner	Standard Gearcase	2005 - 2016	BEL	0P325500 and up	N/A	N/A	853783A06	Black
9.9 FourStroke	Mercury/Mariner	BigFoot Gearcase	2005 - 2016	JPN	0R052328 and up	N/A	N/A	853783A05	Black
9.9 FourStroke	Mercury/Mariner	BigFoot Gearcase	2005 - 2016	BEL	0P325500 and up	N/A	N/A	853783A05	Black
12.9	Chrysler		1968 - 1983	USA		N.L.A	N/A	N/A	N/A
15	Force	Low profile only.	1984 - 1997	USA	E000001 - E287999	N.L.A.	N/A	N/A	N/A
15	Mercury		1986 - 1993	USA	0A197112 - 0D280999	N/A	N/A	N.L.A.	Black
15	Mercury		1986 - 1993	BEL	9461526 - 9792199	N/A	N/A	N.L.A.	Black
15	Mariner		1986 - 1993	USA	0A197112 - 0D280999	N/A	N/A	N.L.A.	Black
15	Mariner		1986 - 1993	BEL	9461526 - 9792199	N/A	N/A	N.L.A.	Black
15	Mercury		1994	USA	0D281000 - 0G077360	N/A	N/A	N.L.A.	Black
15	Mercury		1994	BEL	9792200 - 9831799	N/A	N/A	N.L.A.	Black
15	Mariner		1994	USA	0D281000 - 0G077360	N/A	N/A	N.L.A.	Gray
15	Mariner		1994	BEL	9792200 - 9831799	N/A	N/A	N.L.A.	Gray
15	Mercury		1995 - 1998	USA	0G077361 - 0G760299	N/A	N/A	N.L.A.	Black
15	Mercury		1995 - 1998	BEL	9831800 - 0P016999	N/A	N/A	N.L.A.	Black
15	Mariner		1995 - 1998	USA	0G077361 - 0G760299	N/A	N/A	N.L.A.	Gray
15	Mariner		1995 - 1998	BEL	9831800 - 0P016999	N/A	N/A	N.L.A.	Gray
15	Mercury/Mariner		1999 - 2006	USA	0G760300 and up	N/A	N/A	N.L.A.	Black
15	Mercury/Mariner		1999 - 2006	BEL	0P017000 and up	N/A	N/A	N.L.A.	Black
15 FourStroke	Mercury		1998	USA	0G590000 - 0G760299	N/A	N/A	N.L.A.	Black
15 FourStroke	Mariner		1998	USA	0G590000 - 0G760299	N/A	N/A	N.L.A.	Gray
15 FourStroke	Mercury/Mariner	323cc	1999 - 2008	USA	0G760300 and up	N/A	N/A	N.L.A.	Black
15 FourStroke	Mercury/Mariner	323cc	1999 - 2008	BEL	0P075166 and up	N/A	N/A	N.L.A.	Black
25 (4-Stroke)	Mercury/Mariner	Carb Model Only	1998 - 2005	USA	0G590000 - 1B344298	N/A	824072A 7	N/A	Black
30/40	Mercury	2 cylinder	1994 - 1998	USA	0G055314 - 0G760299	N/A	824072A 3	N/A	Black
30/40	Mercury	2 cylinder	1994 - 1998	BEL	9854537 - 0P016999	N/A	824072A 3	N/A	Black
30/40	Mariner	2 cylinder	1994 - 1998	USA	0G055314 - 0G760299	N/A	N.L.A.	N/A	Gray
30/40	Mariner	2 cylinder	1994 - 1998	BEL	9854537 - 0P016999	N/A	N.L.A.	N/A	Gray
30/40	Mercury/Mariner	2 cylinder	1999 - 2006	USA	0G760300 and up	N/A	824072A 3	N/A	Black
30/40	Mercury/Mariner	2 cylinder	1999 - 2006	BEL	0P017000 and up	N/A	824072A 3	N/A	Black
30 FourStroke	Mercury/Mariner	3 cylinder	1999 - 2005	USA	0G760300 - 1B226999	N/A	N.L.A.	N/A	Black
40	Mercury	3 cylinder, 59 CID	1997 1/2 - 1998	USA	0G531301 - 0G760299	N/A	824072A 3	N/A	Black
40	Mercury	3 cylinder, 59 CID	1997 1/2 - 1998	BEL	9973100 - 0P016999	N/A	824072A 3	N/A	Black
40	Mariner	3 cylinder, 59 CID	1997 1/2 - 1998	USA	0G531301 - 0G760299	N/A	N.L.A.	N/A	Gray
40	Mariner	3 cylinder, 59 CID	1997 1/2 - 1998	BEL	9973100 - 0P016999	N/A	N.L.A.	N/A	Gray
40	Mercury/Mariner	3 cylinder, 59 CID	1999 - 2006	USA	0G760300 and up	N/A	824072A 3	N/A	Black
40	Mercury/Mariner	3 cylinder, 59 CID	1999 - 2006	BEL	0P017000 and up	N/A	824072A 3	N/A	Black
40 FourStroke	Mercury	4 cylinder	1995 - 1998	USA	0G231123 - 0G760299	N/A	N.L.A.	N/A	Black
40 FourStroke	Mariner	4 cylinder	1995 - 1998	USA	0G231123 - 0G760299	N/A	N.L.A.	N/A	Gray
40 FourStroke	Mercury/Mariner	4 cylinder	1999 - 2000	USA	0G760300 and up	N/A	N.L.A.	N/A	Black
40 FourStroke	Mercury/Mariner	4 Cylinder with BigFoot gearcase 996 cc.	2001 - 2006	USA	0T178500 - 1C050251	N/A	N/A	12092A18	Black
40 FourStroke	Mercury/Mariner	4 cylinder with BigFoot gearcase 996 cc.	2001 - 2006	BEL	0P094500 - 0P400999	N/A	N/A	12092A18	Black

Model	Brand	Model Note	Year Range		Serial # Range	Converts 15 Inch (381 mm) To 20 Inch (508 mm)	Converts 20 Inch (508 mm) To 22 1/2 Inch (572 mm)	Converts 20 Inch (508 mm) To 25 Inch (635 mm)	Color
40 FourStroke	Mercury/Mariner	4 cylinder with BigFoot gearcase 996 cc.	2006 - 2016	CHN	1C050252 and up	N/A	N/A	12092A20	Black
40 FourStroke	Mercury/Mariner	4 cylinder with BigFoot gearcase 996 cc.	2006 - 2016	BEL	0P401000 and up	N/A	N/A	12092A20	Black
40 FourStroke	Mercury/Mariner	3 cylinder	1999 - 2005	USA	0G760300 - 1B226999	N/A	N.L.A.	N/A	Black
40 FourStroke	Mercury/Mariner	3 cylinder, BigFoot	2000 - 2005	USA	0G960500 - 1B226999	N/A	N/A	N.L.A.	Black
45 FourStroke	Mercury	4 cylinder	1995 - 1998	USA	0G231123 - 0G760299	N/A	N.L.A.	N/A	Black
45 FourStroke	Mariner	4 cylinder	1995 - 1998	USA	0G231123 - 0G760299	N/A	N.L.A.	N/A	Gray
45 FourStroke	Mercury/Mariner	4 cylinder	1999 - 2000	USA	0G760300 and up	N/A	N.L.A.	N/A	Black
50	Mercury	3 cylinder, 51.8 CID	1991 - 1997	USA	0D000750 - 0G589999	N/A	816696A 1	N/A	Black
50	Mercury	3 cylinder, 51.8 CID	1991 - 1997	BEL	9682500 - 9973099	N/A	816696A 1	N/A	Black
50	Mariner	3 cylinder, 51.8 CID	1991 - 1997	USA	0D000750 - 0G589999	N/A	N.L.A.	N/A	Gray
50	Mariner	3 cylinder, 51.8 CID	1991 - 1997	BEL	9682500 - 9973099	N/A	N.L.A.	N/A	Gray
50	Mercury	3 cylinder, 59 CID	1998	USA	0G590000 - 0G760299	N/A	824072A 3	N/A	Black
50	Mercury	3 cylinder, 59 CID	1998	BEL	9973100 - 0P016999	N/A	824072A 3	N/A	Black
50	Mariner	3 cylinder, 59 CID	1998	USA	0G590000 - 0G760299	N/A	N.L.A.	N/A	Gray
50	Mariner	3 cylinder, 59 CID	1998	BEL	9973100 - 0P016999	N/A	N.L.A.	N/A	Gray
50	Mercury/Mariner	3 cylinder, 59 CID	1999 - 2006	USA	0G760300 and up	N/A	824072A 3	N/A	Black
50	Mercury/Mariner	3 cylinder, 59 CID	1999 - 2006	BEL	0P017000 and up	N/A	824072A 3	N/A	Black
50 FourStroke	Mercury	4 cylinder	1995 - 1998	USA	0G231123 - 0G760299	N/A	N.L.A.	N/A	Black
50 FourStroke	Mariner	4 cylinder	1995 - 1998	USA	0G231123 - 0G760299	N/A	N.L.A.	N/A	Gray
50 FourStroke	Mercury/Mariner	4 cylinder	1999 - 2000	USA	0G760300 - 0T178499	N/A	N.L.A.	N/A	Black
50 FourStroke	Mercury/Mariner	BigFoot	1998 - 2000	USA	0G590000 - 0T178499	N/A	N/A	N.L.A.	Black
50 FourStroke	Mercury/Mariner	4 cylinder with standard gearcase 996 cc.	2001 - 2006	USA	0T178500 - 1B344306	N/A	816696A12	N/A	Black
50 FourStroke	Mercury/Mariner	4 cylinder with standard gearcase 996 cc.	2006	CHN	1C000001 - 1C050251	N/A	816696A12	N/A	Black
50 FourStroke	Mercury/Mariner	4 cylinder with standard gearcase 996 cc.	2001 - 2006	BEL	0P094500 - 0P515896	N/A	816696A12	N/A	Black
50 FourStroke	Mercury/Mariner	4 cylinder with standard gearcase 996 cc.	2006 - 2016	CHN	1C050252 and up	N/A	879150A88	N/A	N/A
50 FourStroke	Mercury/Mariner	4 cylinder with standard gearcase 996 cc.	2006 - 2016	BEL	0P515897 and up	N/A	879150A88	N/A	N/A
50 FourStroke	Mercury/Mariner	4 cylinder with BigFoot gearcase 996 cc.	2001 - 2006	USA	0T178500 - 1B344306	N/A	N/A	12092A18	Black
50 FourStroke	Mercury/Mariner	4 cylinder with BigFoot gearcase 996 cc.	2001 - 2006	BEL	0P094500 - 0P400999	N/A	N/A	12092A18	Black
50 FourStroke	Mercury/Mariner	4 cylinder with BigFoot gearcase 996 cc.	2006 - 2016	CHN	1C050252 and up	N/A	N/A	12092A20	Black
50 FourStroke	Mercury/Mariner	4 cylinder with BigFoot gearcase 996 cc.	2006 - 2016	BEL	0P401000 and up	N/A	N/A	12092A20	Black
55/60	Mercury	3 cylinder	1991 - 1998	USA	0D000750 - 0G760299	N/A	816696A 1	N/A	Black
55/60	Mercury	3 cylinder	1991 - 1998	BEL	9682500 - 0P016999	N/A	816696A 1	N/A	Black
55/60	Mariner	3 cylinder	1991 - 1998	USA	0D000750 - 0G760299	N/A	N.L.A.	N/A	Gray
55/60	Mariner	3 cylinder	1991 - 1998	BEL	9682500 - 0P016999	N/A	N.L.A.	N/A	Gray
55/60	Mercury/Mariner	3 cylinder	1999 - 2006	USA	0G760300 and up	N/A	816696A 1	N/A	Black
55/60	Mercury/Mariner	3 cylinder	1999 - 2006	BEL	0P017000 and up	N/A	816696A 1	N/A	Black
60 Work	Mercury	BigFoot	1994 - 1998	USA	0D279350 - 0G760299	N/A	N.L.A.	N/A	Black
60 Work	Mercury	BigFoot	1994 - 1998	BEL	9793445 - 0P016999	N/A	N.L.A.	N/A	Black
60 Work	Mariner	BigFoot	1994 - 1998	USA	0D279350 - 0G760299	N/A	N.L.A.	N/A	Gray
60 Work	Mariner	BigFoot	1994 - 1998	BEL	9793445 - 0P016999	N/A	N.L.A.	N/A	Gray
60 Work	Mercury/Mariner	BigFoot	1999 - 2006	USA	0G760300 and up	N/A	N.L.A.	N/A	Black
60 Work	Mercury/Mariner	BigFoot	1999 - 2006	BEL	0P017000 and up	N/A	N.L.A.	N/A	Black
60 FourStroke	Mercury/Mariner	4 cylinder with standard gearcase 996 cc.	2001 - 2006	USA	0T178500 - 1B344306	N/A	816696A12	N/A	Black
60 FourStroke	Mercury/Mariner	4 cylinder with standard gearcase 996 cc.	2006	CHN	1C000001 - 1C050251	N/A	816696A12	N/A	Black

OUTBOARD

Model	Brand	Model Note	Year Range		Serial # Range	Converts 15 Inch (381 mm) To 20 Inch (508 mm)	Converts 20 Inch (508 mm) To 22 1/2 Inch (572 mm)	Converts 20 Inch (508 mm) To 25 Inch (635 mm)	Color
60 FourStroke	Mercury/Mariner	4 cylinder with standard gearcase 996 cc.	2001 - 2006	BEL	0P094500 - 0P515896	N/A	816696A12	N/A	Black
60 FourStroke	Mercury/Mariner	4 cylinder with standard gearcase 996 cc.	2006 - 2016	CHN	1C050251 and up	N/A	879150A88	N/A	N/A
60 FourStroke	Mercury/Mariner	4 cylinder with standard gearcase 996 cc.	2006 - 2016	BEL	0P515897 and up	N/A	879150A88	N/A	N/A
60 FourStroke	Mercury/Mariner	4 cylinder with BigFoot gearcase 996 cc.	2001 - 2006	USA	0T178500 - 1B344306	N/A	N/A	12092A18	Black
60 FourStroke	Mercury/Mariner	4 cylinder with BigFoot gearcase 996 cc.	2001 - 2006	BEL	0P094500 - 0P400999	N/A	N/A	12092A18	Black
60 FourStroke	Mercury/Mariner	4 cylinder with BigFoot gearcase 996 cc.	2006 - 2016	CHN	1C050252 and up	N/A	N/A	12092A20	Black
60 FourStroke	Mercury/Mariner	4 cylinder with BigFoot gearcase 996 cc.	2006 - 2016	BEL	0P401000 and up	N/A	N/A	12092A20	Black
70/75/80/90	Mercury	3 cylinder	1987 - 1993	USA	0A996142 - 0G283221	N/A	N/A	N.L.A.	Black
70/75/80/90	Mercury	3 cylinder	1987 - 1993	BEL	9483121 - 9793576	N/A	N/A	N.L.A.	Black
70/75/80/90	Mariner	3 cylinder	1987 - 1993	USA	0A996142 - 0G283221	N/A	N/A	N.L.A.	Black
70/75/80/90	Mariner	3 cylinder	1987 - 1993	BEL	9483121 - 9793576	N/A	N/A	N.L.A.	Black
70/75/80/90	Mercury	3 cylinder	1994 - 1997	USA	0G283222 - 0G589999	N/A	816696A 8	N.L.A.	Black
70/75/80/90	Mercury	3 cylinder	1994 - 1997	BEL	9793577 - 9973099	N/A	816696A 8	N.L.A.	Black
70/75/80/90	Mariner	3 cylinder	1994 - 1997	USA	0G283222 - 0G589999	N/A	816696A 9	N.L.A.	Black
70/75/80/90	Mariner	3 cylinder	1994 - 1997	BEL	9793577 - 9973099	N/A	816696A 9	N.L.A.	Black
75/90	Mercury	3 cylinder	1998	USA	0G590000 - 0G760299	N/A	816696A10	12092A13	Black
75/90	Mercury	3 cylinder	1998	BEL	9973100 - 0P016999	N/A	816696A10	12092A13	Black
75/90	Mariner	3 cylinder	1998	USA	0G590000 - 0G760299	N/A	816696A10	N.L.A.	Gray
75/90	Mariner	3 cylinder	1998	BEL	9973100 - 0P016999	N/A	816696A10	N.L.A.	Gray
75/90	Mercury/Mariner	3 cylinder	1999 - 2006	USA	0G760300 and up	N/A	816696A10	12092A13	Black
75/90	Mercury/Mariner	3 cylinder	1999 - 2006	BEL	0P017000 and up	N/A	816696A10	12092A13	Black
75/90 FourStroke	Mercury/Mariner	4 cylinder, 1.7L	2006 - 2014	USA	1B366823 - 2B094995	N/A	N/A	12092A19	Black
75-100 FourStroke	Mercury/Mariner	2.1L, Standard	2014 - 2016	USA	2B094996 and up	N/A	N/A	8M0105089	Black
75-100 FourStroke	Mercury/Mariner	2.1L, Command Thrust	2014 - 2016	USA	2B094996 and up	N/A	N/A	8M0105090	Black
100/115/125	Mercury	4 cylinder	1987 - 1993	USA	0A996142 - 0G283221	N/A	N/A	N.L.A.	Black
100/115/125	Mercury	4 cylinder	1987 - 1993	BEL	9483121 - 9793576	N/A	N/A	N.L.A.	Black
100/115/125	Mariner	4 cylinder	1987 - 1993	USA	0A996142 - 0G283221	N/A	N/A	N.L.A.	Black
100/115/125	Mariner	4 cylinder	1987 - 1993	BEL	9483121 - 9793576	N/A	N/A	N.L.A.	Black
100/115/125	Mercury	4 cylinder	1994 - 1997	USA	0G283222 - 0G589999	N/A	816696A 8	N.L.A.	Black
100/115/125	Mercury	4 cylinder	1994 - 1997	BEL	9793577 - 9973099	N/A	816696A 8	N.L.A.	Black
100/115/125	Mariner	4 cylinder	1994 - 1997	USA	0G283222 - 0G589999	N/A	816696A 9	N.L.A.	Black
100/115/125	Mariner	4 cylinder	1994 - 1997	BEL	9793577 - 9973099	N/A	816696A 9	N.L.A.	Black
100/115/125	Mercury	4 cylinder	1998	USA	0G590000 - 0G760299	N/A	816696A10	12092A13	Black
100/115/125	Mercury	4 cylinder	1998	BEL	9973100 - 0P016999	N/A	816696A10	12092A13	Black
100/115/125	Mariner	4 cylinder	1998	USA	0G590000 - 0G760299	N/A	816696A10	N.L.A.	Gray
100/115/125	Mariner	4 cylinder	1998	BEL	9973100 - 0P016999	N/A	816696A10	N.L.A.	Gray
100/115/125	Mercury/Mariner	4 cylinder	1999 - 2006	USA	0G760300 and up	N/A	816696A10	12092A13	Black
100/115/125	Mercury/Mariner	4 cylinder	1999 - 2006	BEL	0P017000 and up	N/A	816696A10	12092A13	Black
115 FourStroke	Mercury/Mariner	4 cylinder, 1.7L	2006 - 2014	USA	1B366823 - 2B094955	N/A	N/A	12092A19	Black
115 FourStroke	Mercury/Mariner	2.1L, Standard	2014 - 2016	USA	2B094996 and up	N/A	N/A	8M0105089	Black
115 FourStroke	Mercury/Mariner	2.1L, Command Thrust	2014 - 2016	USA	2B094996 and up	N/A	N/A	8M0105090	Black
150 EFI FourStroke	Mercury/Mariner	4 cylinder	2011 - 2016	USA	1B905505 and up	N/A	N/A	8M0105087	Black

OUTBOARD MOUNTING HARDWARE

Used for permanent mounting of an engine to the boat transom.

MOUNTING BOLT



10-8M0038370

Stainless mounting bolt, 1/2 in. x 5.50 in. (3.25 in. Thread)

Shipped standard with the 200/225/250/275 hp. Verado outboard.

MOUNTING BOLT



10- 67755 1

Standard 4 1/2" Length Mounting Bolt (2.25 in. thread)

Fits current Mercury/Mariner 40 hp. thru V-6 outboards (2-cycle and FourStroke), and also fits Force 40-120 hp. outboards (USA 0E009500 and Newer). Furnished standard with the 135-175 hp. Verado outboards.

MOUNTING BOLT



10- 67755 2

Optional 6 1/2" Length Mounting Bolt (2.75 in. thread)

Fits current Mercury/Mariner 40 hp. and above outboards (2 cycle and FourStroke), and also fits Force 40-120 hp. outboards (USA 0E009500 and Newer).

10-8M0028080

Optional 7 1/2" Length Mounting Bolt (2.75 in. thread)

Fits current Mercury/Mariner 40 hp. and above outboards (2 cycle and FourStroke), and also fits Force 40-120 hp. outboards (USA 0E009500 and Newer).

FLAT WASHER



12- 28421

Stainless Steel x 1.50 in. OD

Fits current Mercury/Mariner 40 hp. thru V-6 outboards (2-cycle and FourStroke), and also fits Force 40-120 hp. outboards (USA 0E009500 and Newer). This is also the "inner" washer furnished with the 200/225/250/275 hp. Verado outboard.

Priced individually, sold @ multiples of 5

MOUNTING HARDWARE



56- 92729A49

Includes 2 screws 10-43216, 2 washers 12-67983, and 2 nuts 11-826711-8.

Will mount the Model Year 2005 and newer 8/9.9 hp. FourStroke outboards with standard gearcase or the BigFoot model without factory power trim.

FLAT WASHER



12-895062

Stainless washer x 1.06 in. OD

Shipped standard as the "outer" washer with the 200/225/250/275 hp. Verado outboard.

Priced individually, sold @ multiples of 2

OUTBOARD

HEX NUT



11-826711 17

Hex Nylock Nut, brass

Fits current Mercury/Mariner 40 hp. thru V-6 outboards (2-cycle and FourStroke), and also fits Force 40-120 hp. outboards (USA 0E009500 and Newer). Also shipped standard with the 135-275 hp. Verado outboard.

MOUNTING NUT KIT

Image not Available.

98-8M0109756

Includes 6 nuts (.500-20, hex, brass) and 2 nuts with nylon inserts.

Fits any Mercury outboard with a .500-20 mounting bolt and strongly recommended for use on the Verado 350/400 Hp. models.

HIGH ALTITUDE GEAR SETS & GEARCASES (V-6)

Due to a loss of horsepower at high altitudes, a lower gear reduction (higher numerical ratio) will enhance performance.

HIGH ALTITUDE GEAR SET



43- 44102A 2

175/200 Gear Set, converts ratcheting style 1.87:1 ratio to a 2:1 ratio.

Fits Mercury / Mariner 175/200 hp. V-6 outboards with ratcheting clutch.

SEAL KIT



26- 89238A 2

Fits Mercury / Mariner 135/150 V-6 outboards (USA 0A904646 and Newer) and 175/200 V-6 outboards (USA 6618751 and Newer).

GEARCASE ASSEMBLY COMPLETE



1647- 9148T81

Black, 2:1 ratio. 20" long shaft
Standard Rotation (RH)

Fits Mercury 135-200 (2.5L) V-6 outboards

HIGH ALTITUDE GEAR SETS & GEARCASES (4 CYLINDER)

Due to a loss of horsepower at high altitudes, a lower gear reduction (higher numerical ratio) will enhance performance.

PINION/FORWARD GEAR ASS'Y. (WITH FORWARD BEARING)



43-803500T 1

Converts to a 2.3 ratio. Reverse gear and a seal or seal & bearing kit also required.

Fits Mercury/Mariner 100/115/125 hp. 2-cycle outboard (USA 0B209468 and Newer, BEL 9523034) with 3 jaw reverse clutch.

REVERSE GEAR



43-850034T

Used with 6 jaw reverse clutch. Pinion/forward gear ass'y. and seal or seal & bearing kit are also required.

Fits Mercury/Mariner 100/115/125 hp. 2-cycle outboard (USA 0B209468 and Newer, BEL 9523034) with 6 jaw reverse clutch.

REVERSE GEAR



43- 12635T

Used with 3 jaw reverse clutch. Pinion/forward gear ass'y. and seal or seal & bearing kit are also required.

Fits Mercury/Mariner 100/115/125 hp. 2-cycle outboard (USA 0B209468 and Newer, BEL 9523034) with 3 jaw reverse clutch.

SEAL KIT



26- 43035A 4

Fits Mercury/Mariner 100/115/125 hp. 2-cycle outboard (USA 0B209468 and Newer, BEL 9523034) with either 3 or 6 jaw reverse clutch.

SEAL & BEARING KIT (W/O FORWARD BEARING)



31-803496T 1

Fits the 2.07:1 ratio gearcase on Mercury/Mariner 75/90 (4-Stroke) and 100/115/125 (2 Cycle) with either 3 or 6 jaw reverse clutch and the original 43-19672 pinion gear. See chart for specific engine applications.

GEAR HOUSING ASSEMBLY COMPLETE



1667- 9011J16

Black, 2.3:1 gear ratio. 20" long shaft length.
Includes the newer 6 jaw reverse clutch and a new powerhead gasket with upper shift shaft for correct throw

Fits Mercury 75-125 hp. 2-cycle outboards with 3 jaw reverse clutch

FLUSHING ATTACHMENTS

Allow for fresh water hook-up to the engine for running at idle or for flushing of the block. Care should be observed in using the correct application.

FLUSHING ATTACHMENT



22- 95633M

Fits Mariner 4-40 hp. Outboards (Japanese origin). Only for use while engine is not running.

FLUSHING ATTACHMENT



16841K02

Fits Mercury/Mariner 4/5 hp. (1 cyl.) 2 cycle outboards, 2.5/3.5 hp. FourStroke outboards, 4/5/6 hp. FourStroke outboards (0R411837 and below), and 8/9.9 hp. FourStroke outboards (model year 2005 & newer). Only for use when engine is not running.

Priced individually, sold @ multiples of 2

Mercury Branded, Clamshell Package Point of Sale Packaged.

16841Q02

Fits Mercury/Mariner 4/5 hp. (1 cyl.) 2 cycle outboards, F2.5/3.5 hp. FourStroke outboards, F4/5/6 FourStroke Outboards (0R411837 and below) and 8/9.9 hp. FourStroke outboards (model year 2005 & newer). Only for use when engine is not running.

Priced individually, sold @ multiples of 2

Quicksilver Branded, Clamshell Package Point of Sale Packaged.

FLUSHING ATTACHMENT



8M0057047

For static flush only. Furnished with each engine.

Fits the F4-5-6hp. FourStroke outboard, 0R411838 and above.

FLUSHING ATTACHMENT



12612Q 2

Fits Mercury/Mariner 4-15 hp. 2 cycle outboard, the 4/5/6 FourStroke, and the 8/9.9/15 hp. (323cc) with standard gearcase. Will allow for running at idle speeds.

Priced individually, sold @ multiples of 5

Quicksilver Branded, Clamshell Package Point of Sale Packaged.

FLUSHING ATTACHMENT



12612T 2

Fits Mercury/Mariner 4-15 hp. 2 cycle outboard, the 4/5/6 hp. FourStroke, and the 8/9.9/15 hp. FourStroke (323cc) with standard gearcase. Will allow for running at idle speeds.

Priced individually, sold @ multiples of 5

Mercury Branded, Clamshell Package Point of Sale Packaged.

FLUSHING ATTACHMENT



24789A 1

Fits older Mercury 3.5-9.8 hp. and JET Outboards (except 20-30 hp.). Will allow for running at idle speeds on most models. Consult your owner's manual for proper operation.

FLUSHING ATTACHMENT



44357Q 2

Will allow for running at idle speeds.

Fits Mercury/Mariner 20 hp. and higher outboards, 9.9/15 hp. FourStroke (323cc) Bigfoot outboards, all Model Year 2005 and Newer 8/9.9 hp. Four Stroke outboards, 15 hp. FourStroke (351cc) outboards, all MerCruiser Sterndrives (except Bravo One Perf. & Blackhawk) and MHP Torque Master gearcases. Note: 2000 and newer V-6 outboards and MerCruiser Bravo drives with dual water pick-up also require Dual Water Pick-Up Flush Seal Kit p/n 881150Q 1.

Priced individually, sold @ multiples of 4

Quicksilver Branded, Clamshell Package Point of Sale Packaged.

FLUSHING ATTACHMENT



44357T 2

Will allow for running at idle speeds.

Fits Mercury/Mariner 20 hp. and higher outboards, 9.9/15 hp. FourStroke (323cc) Bigfoot outboards, all Model Year 2005 and Newer 8/9.9 hp. Four Stroke outboards, 15 hp. FourStroke (351cc) outboards, all MerCruiser Sterndrives (except Bravo One Perf. & Blackhawk) and MHP Torque Master gearcases. Note: 2000 and newer V-6 outboards and MerCruiser Bravo drives with dual water pick-up also require Dual Water Pick-Up Flush Seal Kit p/n 881150K 1.

Priced individually, sold @ multiples of 4

Mercury Branded, Clamshell Package Point of Sale Packaged.

DUAL WATER PICKUP FLUSH SEAL KIT



881150Q 1

Provides a front water pick-up seal for gearcases with dual water pick-ups

Fits 2000 and newer Mercury/Mariner V-6 outboards with dual water pick-ups; and 2000 and newer MerCruiser Bravo One, X, XR & XZ drives with dual water pick-ups.

Priced individually, sold @ multiples of 2

Quicksilver Branded, Clamshell Package Point of Sale Packaged.

DUAL WATER PICKUP FLUSH SEAL KIT



881150K 1

Provides a front water pick-up seal for gearcases with dual water pick-ups

Fits 2000 and newer Mercury/Mariner V-6 outboards with dual water pick-ups; and 2000 and newer MerCruiser Bravo One, X, XR & XZ drives with dual water pick-ups.

Priced individually, sold @ multiples of 2

Mercury Branded, Clamshell Package Point of Sale Packaged.

FLUSHING ATTACHMENT



22-820543A 1

For consumer use. Only for use while engine is not running.

Fits 90/95/120 Sport-Jet.

REPLACEMENT CAP



19-821908

For consumer use sport-jet flushing attachment.

Fits the consumer use 90/95/120 Sport-Jet flushing attachment. Standard flushing kit on the Sport Jet 175 and the 200 OptiMax, 210 and 240 EFI Jet Drives.

FLUSHING KIT



22-820573

Dealer kit, flushes engine while the engine is running. This kit is not for permanent installation. It is intended as a dealer service tool aid.

Fits Sport-Jet 90/95/120 engines.

COASTAL FLUSH KIT



858566A 1

Allows for the addition of a remote flush. Due to location of the flush kit, a temperature gauge can only be used with the addition of a 12415A 2 sending kit.

Fits Mercury/Mariner 75-125 hp. (1993 and Newer) 2 cycle outboards. Engine can be flushed without taking boat out of the water.

COASTAL FLUSH KIT



858566A02

Standard on Saltwater models, this kit will add the same flushing capabilities to the non-saltwater models. Kit allows hooking a flush hose to the front of the engine.

Fits the 75/90/115hp. (1.5L) OptiMax outboards beginning with the 2004 Model Year.

COASTAL FLUSH KIT



858566A03

Kit allows hooking a flush hose to the front of the engine.

Fits the 75-115 hp. EFI FourStroke (1.7L) outboard engine, s/n 1B366823-2B094955.

FLUSHING ATTACHMENT



848703A 1

Fits Mercury Racing CLE gearcases. Engines may be run at idle speeds.

FLUSHING ATTACHMENT



848998A 1

Fits Mercury Racing Sport Master gearcases. Engines may be run at idle speeds.

FLUSHING KIT

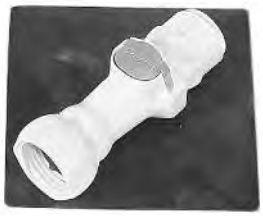

22-852400

Cowl flushing attachment. Engines should not be running when flushing cooling system. Helps prevent a buildup of deposits from clogging the internal water passages.

Fits Mercury/Mariner V-6 engines equipped with flush systems.

HIGH SPEED WATER PICKUP INSERTS

Designed to replace standard water pickup inserts, providing additional ram pressure that forces more water into the cooling system.

WATER INLET



17280A 2

Recommended only where overheating is a known to be a problem, they increase the chance of debris getting caught in the water intake.

Replaces the 8-hole insert on the Mercury / Mariner 2.0L, 2.4L, 2.5L and 3.0L outboards with 4 3/4" gearcases except the 225/250 (3.0L, 1994-1996).

WATER INLET



832066A 1

Recommended only where overheating is a known to be a problem, they increase the chance of debris getting caught in the water intake.

Replaces the 5-hole insert on the Mercury / Mariner 225/250 (3.0L, 1994-1996) outboards.

FUEL TANKS - US-EPA 2011 COMPLIANT

This tank is compliant with the US-EPA requirements for a pressurized fuel tank manufactured in calendar year 2011 or newer.

Meets ABYC, CSA and UL standards. High strength blow molded construction using high density, high molecular weight polyethylene. Formulated protection against ultraviolet exposure and aging. Helps prevent fading and keeps plastic pliable for longer life.

6.6 US GAL (25 L) FUEL TANK



1200-8M0054600

6.6 US gallon capacity, 19 in. x 12-1/2 in. x 11-1/8 in. tank with a "Diurnal Cap" and Mercury's Fuel Demand Valve. An integral fuel gauge is included along with provision for fuel line quick disconnect.

Meets United States calendar year 2011 EPA requirements for a pressurized portable fuel tank.

6.6 US GAL (25 L) FUEL TANK



1200-8M0045691

6.6 US gallon capacity, 21-3/4 in. x 14-1/2 in. x 10 in. with a "Diurnal Cap" and Mercury's Fuel Demand Valve. An integral fuel gauge is included along with provision for a fuel line quick disconnect.

Meets United States year calendar year 2011 EPA requirements for a pressurized portable fuel tank.

3.2 US GAL (12 L) FUEL TANK



1200-8M0045692

3.2 US gallon capacity, 14-1/2 in. x 9-3/4 in. x 9 in. tank with a "Diurnal Cap" and Mercury's Fuel Demand Valve. No fuel gauge is available for this tank. Hoses are to be direct plumbed to the outlet barb of the Fuel Demand Valve.

Meets United States calendar year 2011 EPA requirements for a pressurized portable fuel tank.

3.2 US GAL (12 L) FUEL TANK



1200-8M0047598

3.2 US gallon capacity, 14-1/2 in. x 9-3/4 in. x 9 in. tank with a "Diurnal Cap" and Mercury's Fuel Demand Valve. An integral fuel gauge is included along with provision for a fuel line quick disconnect.

Meets United States calendar year 2011 EPA requirements for a pressurized portable fuel tank.

FUEL TANK CONNECTION W/ FUEL DEMAND VALVE



32-8M0054713

Assembly includes the Fuel Demand Valve and a threaded fitting (for tank connection). A snap clamp is provided to assist hard plumbing the fuel line to the outlet barb on the Fuel Demand Valve.

Used on the 3.2 US gallon tank, meets United States calendar year 2011 EPA requirements for a pressurized portable fuel tank.

FUEL TANK CONNECTION W/ FUEL DEMAND VALVE



32-8M0054714

Assembly includes threaded fitting for tank connection, the Fuel Demand Valve and a quick disconnect for engine hose connection.

Used on the 6.6 US gallon tank, meets United States calendar year 2011 EPA requirements for a pressurized portable fuel tank.

DIURNAL FUEL TANK CAP



36-8M0064067

Services Mercury fuel tanks 8M0054600, 8M0045691, 8M0047598 and 8M0045692 meeting the United States calendar year 2011 EPA requirements for a pressurized portable fuel tank. This replacement cap is provided with a metal chain and retainer instead of a plastic strap and loop.

FUEL DEMAND VALVE



8M0044687

Individual fuel demand valve for servicing the new pressurized tanks with diurnal caps.

Services Mercury fuel tanks 8M0054600, 8M0045691, 8M0047598 and 8M0045692 meeting the United States calendar year 2011 EPA requirements for a pressurized portable fuel tank.

FUEL LINES AND PRIMER BULBS - (US-EPA COMPLIANT)

9 FT. FUEL LINE ASSEMBLY



32-8M0061893

This 9 ft. (2.74m) features a screw in fitting on the tank end, our Fuel Demand Valve, the "EPA-MERC-PB15" primer bulb and a quick disconnect on the engine end. Bulbs will perform at -15 Degrees C (5 Degrees F) after 6 weeks of exposure to fuel.

Mercury Branded

32-8M0061084

This 9 ft. (2.74m) features a screw in fitting on the tank end, our Fuel Demand Valve, the "EPA-MERC-PB15" primer bulb and a quick disconnect on the engine end. Bulbs will perform at -15 Degrees C (5 Degrees F) after 6 weeks of exposure to fuel.

Quicksilver Branded

8 FT. FUEL LINE ASSEMBLY



32-8M0061894

This 8 ft. (2.44 m) fuel line assembly features a quick disconnect on the engine end, the "EPA-MERC-PB15" primer bulb and a male quick connector on the tank end. Bulbs will perform at -15 Degrees C (5 Degrees F) after 6 weeks of exposure to fuel.

This hose will connect to the pigtail on the new 2011 pressurized 6.6 gallon fuel tanks.

Mercury Branded

32-8M0061885

This 8 ft. (2.44 m) fuel line assembly features a quick disconnect on the engine end, the "EPA-MERC-PB15" primer bulb and a male quick connector on the tank end. Bulbs will perform at -15 Degrees C (5 Degrees F) after 6 weeks of exposure to fuel.

This hose will connect to the pigtail on the new 2011 pressurized 6.6 gallon fuel tanks.

Quicksilver Branded

12 FT. FUEL LINE ASSEMBLY

32-8M0061098

This 12 ft. (3.66 m) fuel line assembly features a quick disconnect on the engine end, the "EPA-MERC-PB15" primer bulb and a male quick connector on the tank end. Bulbs will perform at -15 Degrees C (5 Degrees F) after 6 weeks of exposure to fuel.

This hose will connect to the pigtail on the new 2011 pressurized 6.6 gallon fuel tanks.

Mercury Branded

32-8M0061089

This 12 ft. (3.66 m) fuel line assembly features a quick disconnect on the engine end, the "EPA-MERC-PB15" primer bulb and a male quick connector on the tank end. Bulbs will perform at -15 Degrees C (5 Degrees F) after 6 weeks of exposure to fuel.

This hose will connect to the pigtail on the new 2011 pressurized 6.6 gallon fuel tanks.

Quicksilver Branded

8 FT. FUEL LINE ASSEMBLY



32-8M0061895

Low Permeation hose has quick connect fittings on both ends.
"EPA-MERC-PB15-2" primer bulb is included in this 8 ft. (2.44 m) assembly. Bulbs will perform at -15 Degrees C (5 Degrees F) after 6 weeks of exposure to fuel.

Fits Force 40 hp. And larger (1993 and Newer), Force 9.9/15/25 hp. (1998) and all Mercury/Mariner outboards using clip-on type disconnects at both tank and engine ends.

Mercury Branded, Box Point of Sale Packaged.

8 FT. FUEL LINE ASSEMBLY



32-8M0061886

Low permeation hose has quick connect type fitting both ends. "EPA-MERC-PB15" primer bulb is included in this 8 ft. (2.44 m) assembly. Bulbs will perform at -15 Degrees C (5 Degrees F) after 6 weeks of exposure to fuel.

Fits Force 40 hp. and larger (1993 and Newer), Force 9.9/15/25 hp. (1998) and all Mercury/Mariner outboards using clip-on type disconnects at both tank and engine ends.

Quicksilver Branded, Box Point of Sale Packaged.

8 FT. FUEL LINE ASSEMBLY



32-8M0061892

Low permeation hose has standard quick connect type fitting on engine end and 1/4" NPT threaded fitting on the tank end. "EPA-MERC-PB15-2" primer bulb is included in this 8 ft. (2.44 m) assembly. Bulbs will perform at -15 Degrees C (5 Degrees F) after 6 weeks of exposure to fuel.

Fits Force 40 hp. and larger (1993 and Newer), Force 9.9/15/25 hp. (1998) and all Mercury/Mariner outboards using clip on type disconnect at engine ends and a tank with threaded fuel pickup fitting.

Mercury Branded, Box Point of Sale Packaged.

32-8M0061883

Low permeation hose has standard quick connect type fitting on engine end and 1/4" NPT threaded fitting on the tank end. "EPA-MERC-PB15" primer bulb is included in this 8 ft. (2.44 m) assembly. Bulbs will perform at -15 Degrees C (5 Degrees F) after 6 weeks of exposure to fuel.

Fits Force 40 hp. and larger (1993 and Newer), Force 9.9/15/25 hp. (1998) and all Mercury/Mariner outboards using clip on type disconnect at engine ends and a tank with threaded fuel pickup fitting.

Quicksilver Branded, Box Point of Sale Packaged.

8 FT. FUEL LINE ASSEMBLY



32-8M0061891

Low permeation hose has 1/8" NPT threaded fitting on engine end and 1/4" NPT threaded fitting on the tank end. "EPA-MERC-PB15-2" low permeation primer bulb is included in this 8 ft. (2.44 m) assembly. Bulbs will perform at -15 Degrees C (5 Degrees F) after 6 weeks of exposure to fuel.

Fits varying applications using the older style twist type disconnects at the engine end and either a bayonet or thread-in fitting on the tank end.

Mercury Branded, Box Point of Sale Packaged.

32-8M0061882

Low permeation hose has 1/8" NPT threaded fitting on engine end and 1/4" NPT threaded fitting on the tank end. "EPA-MERC-PB15-2" primer bulb is included in this 8 ft. (2.44 m) assembly. Bulbs will perform at -15 Degrees C (5 Degrees F) after 6 weeks of exposure to fuel.

Fits varying applications using the older style twist type disconnects at the engine end and either a bayonet or thread-in fitting on the tank end.

Quicksilver Branded, Box Point of Sale Packaged.

8 FT. FUEL LINE ASSEMBLY



32-8M0061811

There are no ends on this 8 ft. (2.44 m) fuel line assembly featuring the "EPA-MERC-PB15" primer bulb. Bulbs will perform at -15 Degrees C (5 Degrees F) after 6 weeks of exposure to fuel.

This 5/16 inch (8 mm) I.D. fuel line will adapt to a variety of uses by adding connectors as desired.

Mercury Branded

9 FT. FUEL LINE ASSEMBLY - NO CONNECTORS

32-8M0061899

There are no ends on this 9 ft. (2.74 m) fuel line assembly featuring the "EPA-MERC-PB15-2" primer bulb. Bulbs will perform at -15 Degrees C (5 Degrees F) after 6 weeks of exposure to fuel.

This 5/16 inch (8 mm) I.D. fuel line will adapt to a variety of uses by adding connectors as desired.

Mercury Branded

32-8M0061890

There are no ends on this 9 ft. (2.74 m) fuel line assembly featuring the "EPA-MERC-PB15-2" primer bulb. Bulbs will perform at -15 Degrees C (5 Degrees F) after 6 weeks of exposure to fuel.

This 5/16 inch (8 mm) I.D. fuel line will adapt to a variety of EPA-2011 uses by adding connectors as desired.

Quicksilver Branded

12 FT. FUEL LINE ASSEMBLY



32-8M0061897

Low permeation hose has quick connect type fitting on both ends. "EPA-MERC-PB15-2" primer bulb is included in this 12 ft. (3.66 m) assembly. Bulbs will perform at -15 Degrees C (5 Degrees F) after 6 weeks of exposure to fuel.

Fits Force 40 hp. and larger (1993 and Newer), Force 9.9/15/25 hp. (1998) and all Mercury/Mariner outboards using clip on type disconnects at both tank and engine ends.

Mercury Branded, Box Point of Sale Packaged.

32-8M0061888

Low permeation hose has quick connect type fittings on both ends. "EPA-MERC-PB15" primer bulb is included in this 12 ft. (3.66 m) assembly. Bulbs will perform at -15 Degrees C (5 Degrees F) after 6 weeks of exposure to fuel.

Fits Force 40 hp. and larger (1993 and Newer), Force 9.9/15/25 hp. (1998) and all Mercury/Mariner outboards using clip-on type disconnects at both tank and engine ends.

Quicksilver Branded, Box Point of Sale Packaged.

12 FT. FUEL LINE ASSEMBLY - NO CONNECTORS



32-8M0061896

Low Permeation hose 12 ft. (3.66 m) line with "EPA-MERC-PB15" primer bulb only and no end connectors. Bulbs will perform at -15 Degrees C (5 Degrees F) after 6 weeks of exposure to fuel.

Standard universal 5/16" (8 mm) I.D. fuel line can be adapted to many EPA-2011 uses by adding different connectors as desired.

Mercury Branded, Box Point of Sale Packaged.

32-8M0061887

Low permeation hose 12 ft. (3.66 m) 5/16" line with "EPA-MERC-PB15" primer bulb, 2 snap clamps, and no end connectors. Bulbs will perform at -15 Degrees C (5 Degrees F) after 6 weeks of exposure to fuel.

Standard universal 5/16" (8 mm) I.D. fuel line can be adapted to many uses by adding different connectors as desired.

Quicksilver Branded, Box Point of Sale Packaged.

4 FT. FUEL LINE ASSEMBLY - NO CONNECTORS



32-8M0061812

Low permeation hose 4 ft. (1.22 m)line with no connector on one end and an "EPA-MERC-PB15" primer bulb on the other end. Bulb will perform at -15 Degrees C (5 Degrees F) after 6 weeks of exposure to fuel.

Standard universal 5/16 inch (8 mm) I.D. fuel line will adapt to a variety of EPA-2011 uses by hard plumbing or adding connectors as desired.

BULK FUEL LINE



32-8M0038500

Low Permeation hose, 5/16 in. (8 mm) I.D. x 100 ft. (30.5 m) spool. (EPA compliant).

Fits fuel line assemblies for delivering fuel from the fuel tank to the engine fuel connector.

32-8M0038563

Low Permeation hose, 3/8 inch (9.5 mm) I.D. x 100 ft. (30.5 m) roll.
EPA Compliant.

PRIMER BULB ASSEMBLY



8M0052976

Using materials resistant to the chemistry of today's fuels, this bulb is designed to remain pliable longer. Two hose clamps are included. Mercury/Quicksilver bulbs will have the molded EPA compliance statement "EPA-MERC-PB15". Bulbs will perform at -15 Degrees C (5 Degrees F) after 6 weeks of exposure to fuel.

This bulb is a 2011 EPA Certified low permeation bulb. For use with 1/4 in. (6.35 mm) I.D. fuel line.

Priced individually, sold @ multiples of 4

Mercury Branded, Box Point of Sale Packaged.

8M0052975

Using materials resistant to the chemistry of today's fuels, this bulb is designed to remain pliable longer. Two hose clamps are included. Mercury/Quicksilver bulbs will have the molded EPA compliance statement "EPA-MERC-PB15". Bulbs will perform at -15 Degrees C (5 Degrees F) after 6 weeks of exposure to fuel.

This bulb is a 2011 EPA Certified low permeation bulb. For use with 1/4 in. (6.35 mm) I.D. fuel line.

Priced individually, sold @ multiples of 4

Quicksilver Branded, Box Point of Sale Packaged.

PRIMER BULB ASSEMBLY



8M0061876

Using materials resistant to the chemistry of today's fuels, this bulb is designed to remain pliable longer. Two hose clamps are included. Only Mercury/Quicksilver bulbs will have the molded EPA compliance statement "EPA-MERC-PB15". Bulbs will perform at -15 Degrees C (5 Degrees F) after 6 weeks of exposure to fuel.

This bulb is a 2011 EPA Certified low permeation bulb. For use with our gray color, 5/16 in. (8 mm) I.D. fuel line & 3/8" I.D. fuel line.

Priced individually, sold @ multiples of 4

Mercury Branded, Box Point of Sale Packaged.

8M0061875

Using materials resistant to the chemistry of today's fuels, this bulb is designed to remain pliable longer. Two hose clamps are included. Mercury/Quicksilver bulbs will have the molded EPA compliance statement "EPA-MERC-PB15". Bulbs will perform at -15 Degrees C (5 Degrees F) after 6 weeks of exposure to fuel.

This bulb is a 2011 EPA Certified low permeation bulb. For use with our gray color, 5/16 in. (8 mm) I.D. fuel line & 3/8" I.D. fuel line.

Priced individually, sold @ multiples of 4

Quicksilver Branded, Box Point of Sale Packaged.

FUEL LINE FITTINGS AND COMPONENTS

THREADED HOSE BARB



22- 89771T 2

For use with 5/16" (8 mm) I.D. hose and applications requiring a 1/4" NPT thread. Threads into our portable fuel tanks and will also work with our water separating filter bracket.

A .250 inch ID brass fitting for use with gasoline fuel only. This material should not be used with diesel fuels.

Priced individually, sold @ multiples of 2

Mercury Branded, Clamshell Package Point of Sale Packaged.

22- 89771Q 2

For use with 5/16" (8 mm) I.D. hose and applications requiring a 1/4" NPT thread. Threads into our portable fuel tanks and will also work with our water separating filter bracket.

A .250 inch ID brass fitting for use with gasoline fuel only. This material should not be used with diesel fuels.

Priced individually, sold @ multiples of 2

Quicksilver Branded, Clamshell Package Point of Sale Packaged.

THREADED HOSE BARB



22-8M0058419

For use with 5/16" (8 mm) I.D. hose and applications requiring a 1/4" NPT thread. Threads into our portable fuel tanks and will also work with our water separating filter bracket.

A stainless steel fitting for use with both gasoline and diesel fuel.
This fitting has a .300 inch ID.

THREADED HOSE BARB-ENGINE END



22- 89772T 1

For use with 5/16" (8 mm) I.D. hose and applications requiring a 1/8" NPT thread.

Priced individually, sold @ multiples of 2

Mercury Branded, Clamshell Package Point of Sale Packaged.

22- 89772Q 1

For use with 5/16" (8 mm) I.D. hose and applications requiring a 1/8" NPT thread.

Priced individually, sold @ multiples of 2

Quicksilver Branded, Clamshell Package Point of Sale Packaged.

QUICK DISCONNECT-TANK END



30185T 3

Bayonet style.

Bayonet style push and turn type quick disconnect for the older 6.6 gallon fuel tank.

Priced individually, sold @ multiples of 3

Mercury Branded, Clamshell Package Point of Sale Packaged.

QUICK DISCONNECT-TANK END



30185Q 3

Bayonet style

Bayonet style push and turn type quick disconnect for the older 6.6 gallon fuel tank.

Priced individually, sold @ multiples of 3

Quicksilver Branded, Clamshell Package Point of Sale Packaged.

QUICK DISCONNECT-TANK END



22- 13563T 7

Clip-on style.

A double sealed clip-on type disconnect for the fuel tank end and fits a 5/16" (8 mm) I.D. fuel line. Only fits tanks manufactured calendar year 2010 or prior.

Priced individually, sold @ multiples of 2

Mercury Branded, Clamshell Package Point of Sale Packaged.

QUICK DISCONNECT-TANK END



22- 13563Q 7

Clip-on style.

A double sealed clip-on type disconnect for the fuel tank end and fits a 5/16" (8 mm) I.D. fuel line.

Priced individually, sold @ multiples of 2

Quicksilver Branded, Clamshell Package Point of Sale Packaged.

QUICK DISCONNECT-ENGINE END



30635T 3

Small twist lock type connector.

For Mercury / Mariner 3.9 thru 9.8 hp. Outboards (1971 and older) utilizing twist lock type connector.

Priced individually, sold @ multiples of 3

Mercury Branded, Clamshell Package Point of Sale Packaged.

30635Q 3

Small twist lock type connector.

For Mercury/Mariner 3.9 thru 9.8 hp. Outboards (1971 and older) utilizing twist lock type connector.

Priced individually, sold @ multiples of 3

Quicksilver Branded, Clamshell Package Point of Sale Packaged.

QUICK DISCONNECT-ENGINE END



22831T 3

Twist lock type connector.

For Mercury / Mariner utilizing twist lock type connector (except Mercury 3.9 thru 9.8 hp., 1971 and older).

Priced individually, sold @ multiples of 3

Mercury Branded, Clamshell Package Point of Sale Packaged.

22831Q 3

Twist lock type connector.

For Mercury/Mariner utilizing twist lock type connector (except Mercury 3.9 thru 9.8 hp., 1971 and older).

Priced individually, sold @ multiples of 3

Quicksilver Branded, Clamshell Package Point of Sale Packaged.

QUICK DISCONNECT-ENGINE END



22- 14213K

Used with older 1/4" I.D. Hose

Fits Force 40 hp. and larger (1993 and newer), Force 9.9/15/25 hp. (1998) and all Mercury/Mariner outboards using clip on type disconnect at engine ends and 1/4" I.D. (black) fuel line.

Priced individually, sold @ multiples of 2

Mercury Branded, Clamshell Package Point of Sale Packaged.

22- 14213Q

Used with older 1/4" I.D. Hose

Fits Force 40 hp. and larger (1993 and newer), Force 9.9/15/25 hp. (1998) and all Mercury/Mariner outboards using clip on type disconnect at engine ends and 1/4" I.D. (black) fuel line.

Priced individually, sold @ multiples of 2

Quicksilver Branded, Clamshell Package Point of Sale Packaged.

QUICK DISCONNECT



22- 13563T 3

Used with newer fuel line diameter.

Fits Force 40 hp. and larger (1993 and Newer), Force 9.9/15/25 hp. (1998) and all Mercury/Mariner outboards using clip on type disconnect and 5/16" I.D (8 mm) fuel line.

Priced individually, sold @ multiples of 2

Mercury Branded, Clamshell Package Point of Sale Packaged.

QUICK DISCONNECT-ENGINE END



22- 13563Q 3

Used with newer fuel line diameter.

Fits Force 40 hp. and larger (1993 and Newer), Force 9.9/15/25 hp. (1998) and all Mercury/Mariner outboards using clip on type disconnect at engine ends and 5/16" I.D (8 mm) fuel line.

Priced individually, sold @ multiples of 2

Quicksilver Branded, Clamshell Package Point of Sale Packaged.

QUICK DISCONNECT-ENGINE END



F197787T3

Engine end fits Force 5 hp., and fits 9.9/15 (1997 and prior) and 25 hp. (3 cyl., 1997 and prior).

Priced individually, sold @ multiples of 2

Mercury Branded, Clamshell Package Point of Sale Packaged.

QUICK DISCONNECT-ENGINE END



F197787Q3

Engine end fits Force 5 hp., and fits 9.9/15 (1997 and prior) and 25 hp. (3 cyl., 1997 and prior).

Priced individually, sold @ multiples of 2

Quicksilver Branded, Clamshell Package Point of Sale Packaged.

CONNECTOR KIT



22-804787T

Contains both on-engine and mating fuel line connector.

For use with 5/16 in. (8 mm) I.D. fuel line.

Priced individually, sold @ multiples of 2

Mercury Branded, Clamshell Package Point of Sale Packaged.

22-804787Q

Contains both on-engine and mating fuel line connector.

For use with 5/16 in. (8 mm) I.D. fuel line.

Priced individually, sold @ multiples of 2

Quicksilver Branded, Clamshell Package Point of Sale Packaged.

MALE FUEL CONNECTOR - QUICK DISCONNECT



22-816856T 3

For use with 5/16 in. (8 mm) I.D. fuel line.

Priced individually, sold @ multiples of 2

Mercury Branded, Clamshell Package Point of Sale Packaged.

ON-ENGINE FUEL CONNECTOR

22-816856Q 3

For use with 5/16 in. (8 mm) I.D. fuel line.

Priced individually, sold @ multiples of 2

Quicksilver Branded, Clamshell Package Point of Sale Packaged.

FUEL CONNECTOR - ENGINE END



F213238T2

Small inlet used on older style Force and Chrysler outboards.

Priced individually, sold @ multiples of 2

Mercury Branded, Clamshell Package Point of Sale Packaged.

FUEL CONNECTOR - ENGINE END



F213238Q2

Small inlet used on older style Force and Chrysler outboards.

Priced individually, sold @ multiples of 2

Quicksilver Branded, Clamshell Package Point of Sale Packaged.

FUEL LINE COUPLER



22-8M0001721

Barbed ends.

Provides for coupling Mercury .375 ID fuel line with Mercury .3125 ID fuel line.

Priced individually, sold @ multiples of 2

FUEL LINE SNAPPER CLAMP



54- 41582T 7

For use with our gray color, 5/16 in. (8 mm) I.D. fuel line.

Priced individually, sold @ multiples of 2

Mercury Branded, Clamshell Package Point of Sale Packaged.

54- 41582Q 7

For use with our gray color, 5/16 in. (8 mm) I.D. fuel line.

Priced individually, sold @ multiples of 2

Quicksilver Branded, Clamshell Package Point of Sale Packaged.

HOSE CLAMP



54-888988019

22.6 mm diameter stainless steel stepless ear clamp.

Used on the new low permeation primer bulbs to provide a tight seal between the bulb and the valve.

BLOW START SIPHON

BLOW-START SIPHON



91-827497A 1

The ruggedly constructed siphon is a quick and convenient way to transfer fuel from a gas can to a fuel tank. The siphon flows approximately five gallons of fuel per minute. Siphoning is started by blowing air into a blow-tube. Even better, it eliminates the old "fuel-in-the-mouth" possibility and stores easily. The siphon is very useful in areas where boat fuel is no longer available at the dock.

Quicksilver Branded, Peg Display Product Point of Sale Packaged.

WATER ELIMINATOR

Uses polymer crystals encased in a plastic filter to absorb water from the fuel in a fuel tank.

WATER ELIMINATOR



67-808887Q

Contains a drying agent commonly used to keep small, sealed containers dry. It absorbs water that has collected in the fuel tank.
How to use: Attach to the inside fuel cap with the lanyard (included). Adjust the lanyard so the Water Eliminator sits at the bottom of the fuel tank. Replace as needed.
For use in all octane grades of gasoline, including ethanol blended. Not recommended for diesel fuel.

For use in all 2-cycle and 4-cycle gasoline outboard, sterndrive, inboard and jet drive marine engines.

Priced individually, sold @ multiples of 6

Quicksilver Branded, Point of Sale Packaged.

FUEL FILTERS

INLINE FUEL FILTER



35-816296K03

In-line fuel filter used with 1/4 in. ID fuel line.

Located under the cowling, on the outboard engine. Found in use with 1/4" hose. Mainly used with the 8/9.9/15 hp. FourStroke outboard (323cc, USA-0T003862-1B727495).

Priced individually, sold @ multiples of 3

Mercury Branded, Clamshell Package Point of Sale Packaged.

INLINE FUEL FILTER



35-816296K 2

In-line fuel filter used with 5/16 in. ID fuel line.

Priced individually, sold @ multiples of 3

Mercury Branded, Clamshell Package Point of Sale Packaged.

INLINE FUEL FILTER



35- 16248

An in-line fuel filter located under cowl on outboard engines.

Fits the 4/5 hp. 2-cycle (1999 & newer), the 4/5/6 hp. FourStroke (1999 & newer), the 8/9.9 hp. FourStroke (2005 & newer) and the 15/20 hp. FourStroke (351cc, 2008 and newer).

FUEL FILTER KIT



35- 87946K04

149 micron screen

Replacement fuel filter screen and viton seal for use with Mercury/Mariner outboard under-cowl fuel filter assemblies with screw-on bowl. This kit services the prior filter assembly that was all white in color (both top and bowl).

Priced individually, sold @ multiples of 2

Mercury Branded, Clamshell Package Point of Sale Packaged.

FUEL FILTER



35- 73532

FUEL FILTER



35- 80365M

Fits 9.9/15 HP 4-Stroke Outboards

FUEL FILTER



35-877565T 1

Fits 25 Hp - 90 Hp 4-Stroke Carburetored Outboards
1999 and Newer

FUEL FILTER



35-879885Q

In-line, under cowl fuel filter.

Used on the 30/40 EFI FourStroke outboard, the 4 cylinder (996 cc) 40/50/60 hp. EFI FourStroke outboards, the 75-115 FourStroke (1.7L, s/n 1B366823-2B094995), the 75-115 FourStroke (2.1L, s/n 2B094996 and above), the 150 EFI FourStroke (1B905505 and above) and the 135 thru 300 hp. Verado outboards.

Quicksilver Branded

FUEL FILTER KIT



35-816296A 3

In-line fuel filter used with 1/4 in. ID fuel line.

Located under the cowling, on the outboard engine. Found in use with 1/4" hose. Mainly used with the 8/9.9/15 hp. FourStroke outboard (323cc, USA-0T003862-1B727495).

SCREEN



35- 59072

Priced individually, sold @ multiples of 3

FUEL FILTER ELEMENT



881540

Fits Mercury/Mariner 75/90/115 hp. FourStroke carbureted outboards.

FUEL FILTER ELEMENT



35-888289T 2

Fits Mercury/Mariner 225 hp. EFI FourStroke outboards.

FUEL FILTER ELEMENT



35-8M0060041

Under cowl replacement cartridge where applicable.

Fits the under cowl L4 Verado outboard replaceable cartridge fuel filter, the 200-300 hp. L6 Verado (prior to Gen V) and the newer 1.5L & 3.0L DFI outboards that utilize a vapor separator with a top screw-in type filter. Also fits the MCM 4.5L and 6.2L (2016 & newer)engines.

INLINE FUEL FILTER



35-879884T

A cartridge type fuel filter located under the cowl on outboard engines.

INLINE FUEL FILTER



35-8M0057677

High pressure in-line fuel filter to fuel rail.

Fits the F150 hp. EFI FourStroke outboard.

WATER SEPARATING FUEL FILTERS AND KITS

For gasoline use ONLY, the element will remove unwanted water from the fuel supply as it flows through the filter to the engine.

WATER SEPARATING FUEL FILTER KIT



35-8M0082291

Kit consisting of our vessel mounted head (without fittings) and our High Capacity water separating fuel filter. Our brass fittings may be used with gas engines but stainless steel fittings are required in diesel applications. Filter features 10 micron, 90% efficiency with a 120 gallon per hour flow rate.

Mercury Branded

WATER SEPARATING FUEL FILTER



35-8M0079963

High volume replacement filter featuring 10 micron filtration with over 90% efficiency, flowing 120 gallons per hour while separating water from your fuel. The internal epoxy coating protects against corrosion and the low pressure drop reduces fuel flow restriction helping to prevent vapor-locking and stalling. This filter contains 25% more media than comparable aftermarket filters, providing longer life and improved water separation.

Mercury Branded

WATER SEPARATING FUEL FILTER KIT



8M0095669

Contains water separating fuel filter with water sensor, base, electrical harness, 2 barbed connectors and 2 pipe plugs.

Shipped standard with all FSM equipped 6-cylinder Verado outboards, Gen 5 (s/n 2B144123 and above).

WATER SEPARATING FUEL FILTER



35-8M0095659

Designed smaller to better fit the hand, the internal holding capacity of this filter is as great as our standard filter. A new o-ring for the water sensor is included with each filter.

This replacement filter fits the vessel mounted filter kit furnished standard with all FSM equipped 6-cylinder Verado outboards, Gen 5 (s/n 2B144123 and above).

Mercury Branded

WATER SEPARATING FUEL FILTER



35-8M0095658

Designed smaller to better fit the hand, the internal holding capacity of this filter is as great as our standard filter. A new o-ring for the water sensor is included with each filter.

This replacement filter fits the vessel mounted filter kit furnished standard with all FSM equipped 6-cylinder Verado outboards, Gen 5 (s/n 2B144123 and above).

Quicksilver Branded

WATER SEPARATING FUEL FILTER KIT



98-8M0103686

An option to the standard provided, vessel mounted water separating filter kit. Contains filter, bracket hose and harness to install a water separating filter under the cowl of a 6-cylinder, Gen 5, FSM equipped Verado outboard.

Fits the Gen 5, 6-cylinder Verado outboard (s/n 2B144123 and above).

WATER SEPARATING FUEL FILTER KIT



8M0109543

A vessel mounted water separating fuel filter featuring a see-through bowl for visual inspection and a drain for servicing. A water in fuel sensor will provide an alert compatible with Mercury controls and instrumentation. Hose fittings are included for both 3/8 inch (9.5 mm) and 5/16 inch (8 mm) I.D. fuel lines and 3 adjustable hose clamps. NEW

Fits the Mercury/Mariner F150 Hp. EFI FourStroke 4-cylinder outboard, the F75-115 Hp. FourStroke (s/n 2B094996 and above) and must be installed in a compartment open to the atmosphere or void of ignition sources.

QUICKSILVER WATER SEPARATING FUEL FILTER



35-8M0103095

Outboard Element without Plastic Bowl, spins on to existing Quicksilver filter heads with 11/16-16 threads.

For outboards, allows for filter replacement when re-using the see-through plastic bowl. Degree of filtration is 10 micron.

Quicksilver Branded

WATER SEPARATING FUEL FILTER KIT



35-8M0113498

This vessel mounted kit (with higher capacity) replaces the engine on-board water separating fuel filter. It features the use of a see-through plastic bowl for visual inspection and a drain for servicing.

Fits the 135-200 Hp. 4-cylinder Verado outboard and must be installed in a compartment open to the atmosphere or void of ignition sources.

WATER SEPARATING FUEL FILTER KIT



35-8M0114618

This vessel mounted kit (with higher capacity) replaces the engine on-board water separating fuel filter. It features the use of a see-through plastic bowl for visual inspection and a drain for servicing. This kit may be used as optional to the standard kit now shipped with Gen 5, FSM equipped 6-cylinder Verados.

Fits the 6-cylinder Gen IV and newer Verado outboard and must be installed in a compartment open to the atmosphere or void of ignition sources.

QUICKSILVER WATER SEPARATING FUEL FILTER



35-8M0103096

Outboard Element without Plastic Bowl, spins on to existing Quicksilver filter heads with 1-14 threads.

For outboards, allows for filter replacement when re-using the see-through plastic bowl. Degree of filtration is 10 micron.

Quicksilver Branded

WIF SENSOR EXTENSION HARNESS



84-8M0105263

Provides a 36 inch (914 mm) extension for the vessel mounted water separating fuel filters that are equipped with a WIF (water in fuel) sensor.

84-8M0105264

Provides a 6 foot (1.8 m) extension for the vessel mounted water separating fuel filters that are equipped with a WIF (water in fuel) sensor.

WATER SEPARATING FUEL FILTER KIT



8M0097838

Filter Kit, consisting of filter canister featuring sight bowl and manual drain and including our filter bracket with fittings. No water in fuel sensor is included or used with this kit.

Vessel mounted in a ventilated location open to the atmosphere or void of ignition sources, this kit is intended for use with Mercury, Mariner or Force gasoline outboard engines that do not already have a water separating fuel filter. This kit is included standard with the F75-150 FourStroke SeaPro outboards beginning in 2014.

WATER SEPARATING FUEL FILTER KIT



35-802893A 4

Filter Kit, including filter canister and bracket. All Mercury, Mariner and Force outboards with a pulse driven fuel pump that do not already have a water separating fuel filter can gain benefit from this externally mounted kit. Degree of filtration is 25 micron. minimum.

Used in both outboard and MerCruiser applications (except 1992 MerCruiser 4.3 L Gen II engines equipped with an in-line fuel filter).

Mercury Branded, Box Point of Sale Packaged.

WATER SEPARATING FUEL FILTER KIT



35-802893Q 4

For gasoline use only. Degree of filtration is 25 micron, minimum.

Used in both outboard and MerCruiser applications (except 1992 MerCruiser 4.3 L Gen II engines equipped with an in-line fuel filter).

Quicksilver Branded, Box Point of Sale Packaged.

WATER SEPARATING FUEL FILTER



35-802893T

25 micron

Used in both outboard and MerCruiser applications (except 1992 MerCruiser 4.3 L Gen II engines equipped with an in-line fuel filter & 1.6L Vazer engines).

Mercury Branded, Box Point of Sale Packaged.

WATER SEPARATING FUEL FILTER



35-802893Q01

25 micron

Used in both outboard and MerCruiser applications (except 1992 MerCruiser 4.3 L Gen II engines equipped with an in-line fuel filter & 1.6L Vazer engines).

Priced individually, sold @ multiples of 6

Quicksilver Branded, Box Point of Sale Packaged.

WATER SEPARATING FUEL FILTER



35- 18458T 3

Water separating fuel filter with the black screw-in sensor.

Located under the cowl on all Mercury/Mariner V-6 EFI outboard engines, 1995 and earlier.

Mercury Branded, Box Point of Sale Packaged.

WATER SEPARATING FUEL FILTER



35- 18458Q 3

Water separating fuel filter with the black screw-in sensor.

Located under the cowl on all Mercury/Mariner V-6 EFI outboard engines, 1995 and earlier.

Quicksilver Branded, Box Point of Sale Packaged.

WATER SEPARATING FUEL FILTER



35- 18458T 4

Water separating fuel filter with the blue screw-in sensor.

Located under the cowl on all Mercury/Mariner V-6 EFI/DFI outboard engines, 1996 and newer.

Mercury Branded, Box Point of Sale Packaged.

WATER SEPARATING FUEL FILTER



35- 18458Q 4

Water separating fuel filter with the blue screw-in sensor.

Located under the cowl on all Mercury/Mariner V-6 EFI/DFI outboard engines, 1996 and newer.

Quicksilver Branded, Box Point of Sale Packaged.

WATER SEPARATING FILTER BRACKET



89876A 3

Includes brass fittings.

THREADED HOSE BARB



22- 89771T 2

For use with 5/16" (8 mm) I.D. hose and applications requiring a 1/4" NPT thread. Threads into our portable fuel tanks and will also work with our water separating filter bracket.

A .250 inch ID brass fitting for use with gasoline fuel only. This material should not be used with diesel fuels.

Priced individually, sold @ multiples of 2

Mercury Branded, Clamshell Package Point of Sale Packaged.

THREADED HOSE BARB



22-8M0058419

For use with 5/16" (8 mm) I.D. hose and applications requiring a 1/4" NPT thread. Threads into our portable fuel tanks and will also work with our water separating filter bracket.

A stainless steel fitting for use with both gasoline and diesel fuel.
This fitting has a .300 inch ID.

THREADED HOSE BARB



22- 34982

For use with 3/8" (9.5 mm) I.D. hose and applications requiring a 1/4" NPT thread. Threads into our portable fuel tanks and will also work with our water separating filter bracket.

A .375 inch ID brass fitting for use with gasoline fuel only. This material should not be used with diesel fuels.

PIPE PLUG



22- 32561

1/4" -18 NPT (Steel)

Priced individually, sold @ multiples of 2

FUEL LINE SNAPPER CLAMP



54- 41582T 7

For use with our gray color, 5/16 in. (8 mm) I.D. fuel line.

Priced individually, sold @ multiples of 2

Mercury Branded, Clamshell Package Point of Sale Packaged.

WATER SEPARATING FUEL FILTER KIT



8M0056547

Accessory under cowl kit.

Fits the Mercury/Mariner 4/5/6 hp. FourStroke outboards starting with serial number 0R411838.

WATER SEPARATING FUEL FILTER - RACOR

For gasoline use ONLY, the element will remove unwanted water from the fuel supply as it flows through the filter to the engine. These filters have a reusable bowl. Fits Mercury / Mariner / Yamaha / and Suzuki outboards.

RACOR WATER SEPARATING FUEL FILTER



35-809096

Replacement element with plastic bowl spins on existing Quicksilver filter heads.

For outboards has a see-through plastic bowl allowing for visual inspection. Check for adequate clearance prior to mounting. Degree of filtration is 10 micron.

QUICKSILVER WATER SEPARATING FUEL FILTER



35-8M0103096

Outboard Element without Plastic Bowl, spins on to existing Quicksilver filter heads with 1-14 threads.

For outboards, allows for filter replacement when re-using the see-through plastic bowl. Degree of filtration is 10 micron.

Quicksilver Branded

REMOTE FUEL TANK ADAPTER KITS

Adapts the listed Mercury / Mariner 4/5 hp. Outboards to optional use of a remote style fuel tank.

REMOTE FUEL TANK ADAPTOR KIT



22- 15781A12

Kit includes hoses, shut-off valve and fitting.

Fits Mercury / Mariner 4/5 hp. (1 cyl.) 2 cycle outboards (USA 0A816941-0A855096).

REMOTE FUEL TANK ADAPTER KIT



815596A 2

Kit includes hoses, shut-off valve and fitting.

Fits Mercury/Mariner 4/5 hp. (1 cyl.) 2 cycle outboards (USA 0A855097 and Newer, BEL 9589154 and Newer).

MANUAL CHOKE KIT

Improves cold starting capabilities in cold weather climates.

MANUAL CHOKE KIT



856116A 1

Fits Mercury / Mariner 30/40 hp. (2 cyl.) 2 cycle outboards (USA 0G438000 and Newer, BEL 9927000 and Newer).

THERMOSTAT KIT

Raises engine operating temperature for improved running and idling qualities.

THERMOSTAT KIT



14586A 3

Includes 120 degree thermostat and gaskets.

Fits various Mercury/Mariner 6-25 hp. 2 cycle outboards. See application chart for specific engine models.

THERMOSTAT KIT



14586A 4

Includes 120 degree thermostat, gaskets and poppet valve.

Fits various Mercury / Mariner 50/55/60 hp. 2 cycle outboards. See application chart for specific engine models.

THERMOSTAT KIT



14586A 6

Includes 120 degree thermostat, gaskets and poppet valve.

Fits various Mercury / Mariner 50/55/60 hp. 2 cycle outboards. See application chart for specific engine models.

THERMOSTAT KIT



14586A 7

Includes 130 degree thermostat, gaskets and poppet valve.

Fits Mercury / Mariner 30/40 hp. (2 cyl.) 2 cycle outboards (USA 0G044027 and Newer, BEL 9855139 and Newer).

THERMOSTAT KIT



803061T 1

Includes 120 degree thermostat, thermostat gasket, washer and cover gasket.

Fits various Mercury/Mariner 70-125 hp. 2 cycle outboards (1987 and Newer). See application chart for specific engine models.

THERMOSTAT KIT



855676A 1

Includes 120 degree thermostat and gaskets.

Fits Mercury/Mariner 9.9 hp. FourStroke (1999 - 2004), 15 hp. FourStroke (1998-2006, 323cc) and the 25 hp. FourStroke outboard (1998-2005). See application chart for specific engine models. Will not fit serial numbers beginning with 0H.

THERMOSTAT KIT



825212A 1

Includes 120 degree thermostat and gaskets.

Fits various Mercury/Mariner 30/40/45/50 hp. FourStroke outboards. See application chart for specific engine models.

THERMOSTAT KIT



850055A 2

Includes 110 degree thermostat and gaskets.

Fits various Mercury / Mariner 40/50/55/60 hp. 2 cycle outboards. See application chart for specific engine models.

THERMOSTAT KIT



855676A 1

Includes 120 degree thermostat and gaskets.

Fits Mercury/Mariner 9.9 hp. FourStroke (1999 - 2004), 15 hp. FourStroke (1998-2006, 323cc) and the 25 hp. FourStroke outboard (1998-2005). See application chart for specific engine models. Will not fit serial numbers beginning with 0H.

THERMOSTATS CHART - MERCURY/MARINER

Mercury/Mariner Thermostats

Model	Brand	Year Range	Country	Serial # Range	Thermostat Kit
6	Mercury/Mariner	1986 - 2003	USA	0A197112 - 0T800749	14586A 3(2)
6	Mercury/Mariner	1986 - 2006	BEL	9461526 and up	14586A 3(2)
8	Mercury/Mariner	1986 - 2006	USA	0A197112 and up	14586A 3(2)
8	Mercury/Mariner	1986 - 2006	BEL	9461526 and up	14586A 3(2)
9.9	Mercury/Mariner	1986 - 2016	USA	0A197112 and up	14586A 3(2)
9.9	Mercury/Mariner	1986 - 2016	BEL	9461526 and up	14586A 3(2)
8 FourStroke	Mercury/Mariner	2001 - 2004	BEL	0P086824 - 0P325499	855676A 1(2)
9.9 FourStroke	Mercury/Mariner	1999 - 2004	USA	0G760300 - 0T979999	855676A 1(2)
9.9 FourStroke	Mercury/Mariner	1999 - 2004	BEL	0P075166 - 0P325499	855676A 1(2)
15	Mercury/Mariner	1988 - 2016	USA	0B292414 and up	14586A 3(2)
15	Mercury/Mariner	1988 - 2016	BEL	9542620 and up	14586A 3(2)
15 SEA PRO	Mercury	1994 - 2016	USA	0G044365 and up	14586A 3(2)
15 SEA PRO	Mercury	1994 - 2016	BEL	9927000 and up	14586A 3(2)
SUPER 15	Mariner	1988 - 2016	USA	0B238464 and up	14586A 3(2)
SUPER 15	Mariner	1988 - 2016	BEL	9507381 and up	14586A 3(2)
SUPER 15	Mariner	1988 - 2016	CAN	0A730007 and up	14586A 3(2)
15 FourStroke (323cc)	Mercury/Mariner	1998 1/2 - 2008	USA	0G590000 - 1B727495	855676A 1(2)
15 FourStroke (323cc)	Mercury/Mariner	1999 - 2008	BEL	0P075166 and up	855676A 1(2)

OUTBOARD

Model	Brand	Year Range	Country	Serial # Range	Thermostat Kit
20	Mercury/Mariner	1986 - 2003	USA	0B114231 - 0T800749	14586A 3(2)
20	Mercury/Mariner	1986 - 2016	BEL	9467988 and up	14586A 3(2)
20	Mercury/Mariner	1986 - 2003	CAN	0A719661 and up	14586A 3(2)
25 (2 Cyl)	Mercury/Mariner	1986 - 2016	USA	0B114231 and up	14586A 3(2)
25 (2 Cyl)	Mercury/Mariner	1986 - 2016	BEL	9467988 and up	14586A 3(2)
25 (2 Cyl)	Mercury/Mariner	1986 - 2016	CAN	0A719661 and up	14586A 3(2)
25 SEA PRO	Mercury	1988 - 2016	USA	0B238464 and up	14586A 3(2)
25 SEA PRO	Mercury	1988 - 2016	BEL	9507381 and up	14586A 3(2)
25 SEA PRO	Mercury	1988 - 2016	CAN	0A730007 and up	14586A 3(2)
25 FourStroke	Mercury/Mariner	1998 - 2005	USA	0G590000 - 1B226999	855676A 1(2)
25 FourStroke	Mercury/Mariner	1999 - 2005	BEL	0P075166 - 0P400999	855676A 1(2)
30 (2 Cyl)	Mercury/Mariner	1994 - 2016	USA	0G044027 and up	14586A 7(3)
30 (2 Cyl)	Mercury/Mariner	1994 - 2016	BEL	9855139 and up	14586A 7(3)
30 FourStroke	Mercury/Mariner	1999 - 2005	USA	0G760300 - 1B226999	825212A 1(2)
30 FourStroke	Mercury/Mariner	1999 - 2005	BEL	0P017000 - 0P400999	825212A 1(2)
35	Mercury/Mariner	1984 - 2016	USA	6445653 and up	N.L.A.(3)
35	Mercury/Mariner	1984 - 2016	BEL	9384476 and up	N.L.A.(3)
40 (2 Cyl)	Mercury/Mariner	1994 - 2016	USA	0G044027 and up	14586A 7(3)
40 (2 Cyl)	Mercury/Mariner	1994 - 2016	BEL	9855139 and up	14586A 7(3)
40 (3 Cyl)	Mercury/Mariner	1997 - 2016	USA	0G531301 and up	850055A 2(2)
40 (3 Cyl)	Mercury/Mariner	1997 - 2016	BEL	9973100 and up	850055A 2(2)
40 FourStroke (3 cyl.)	Mercury/Mariner	1998 - 2016	USA	0G231123 and up	825212A 1(2)
40 FourStroke (3 cyl.)	Mercury/Mariner	1999 - 2016	BEL	0P017000 and up	825212A 1(2)
45 FourStroke	Mercury/Mariner	1996 - 2000	USA	0G231123 and up	825212A 1(2)
50 (3 Cyl)	Mercury/Mariner	1987 - 1990	USA	0B110789 - 0D000749	N.L.A.(3)
50 (3 Cyl)	Mercury/Mariner	1987 - 1990	BEL	9482600 - 9671686	N.L.A.(3)
50 (3 Cyl)	Mercury/Mariner	1991 - 1993	USA	0D000750 - 0D181999	14586A 4(3)
50 (3 Cyl)	Mercury/Mariner	1991 - 1993	BEL	9682500 - 9740999	14586A 4(3)
50 (3 Cyl)	Mercury/Mariner	1994 - 1997	USA	0D182000 - 0G589999	14586A 6(3)
50 (3 Cyl)	Mercury/Mariner	1994 - 1997	BEL	9741000 - 9973099	14586A 6(3)
50 (3 Cyl)	Mercury/Mariner	1998 - 2016	USA	0G590000 and up	850055A 2(2)
50 (3 Cyl)	Mercury/Mariner	1998 - 2016	BEL	9973100 and up	850055A 2(2)
50 FourStroke	Mercury/Mariner	1995 - 2000	USA	0G231123 - 0T178499	825212A 1(2)
55 (3 Cyl)	Mercury/Mariner	1991 - 1993	USA	0D000750 - 0D181999	14586A 4(3)
55 (3 Cyl)	Mercury/Mariner	1991 - 1993	BEL	9682500 - 9740999	14586A 4(3)
55 (3 Cyl)	Mercury/Mariner	1994 - 1997	USA	0D182000 - 0G589999	14586A 6(3)
55 (3 Cyl)	Mercury/Mariner	1994 - 1997	BEL	9741000 - 9973099	14586A 6(3)
55 (3 Cyl)	Mercury/Mariner	1998 - 2016	USA	0G590000 and up	850055A 2(2)
55 (3 Cyl)	Mercury/Mariner	1998 - 2016	BEL	9973100 and up	850055A 2(2)
60 (3 Cyl)	Mercury/Mariner	1987 - 1990	USA	0B110789 - 0D000749	N.L.A.(3)
60 (3 Cyl)	Mercury/Mariner	1987 - 1990	BEL	9482600 - 9671686	N.L.A.(3)
60 (3 Cyl)	Mercury/Mariner	1991 - 1993	USA	0D000750 - 0D181999	14586A 4(3)
60 (3 Cyl)	Mercury/Mariner	1991 - 1993	BEL	9682500 - 9740999	14586A 4(3)
60 (3 Cyl)	Mercury/Mariner	1994 - 1997	USA	0D182000 - 0G589999	14586A 6(3)
60 (3 Cyl)	Mercury/Mariner	1994 - 1997	BEL	9741000 - 9973099	14586A 6(3)
60 (3 Cyl)	Mercury/Mariner	1998 - 2016	USA	0G590000 and up	850055A 2(2)
60 (3 Cyl)	Mercury/Mariner	1998 - 2016	BEL	9973100 and up	850055A 2(2)
70 (3 Cyl)	Mercury/Mariner	1987 - 2016	USA	0A996142 and up	803061T 1(1)
70 (3 Cyl)	Mercury/Mariner	1987 - 2016	BEL	9483121 and up	803061T 1(1)
75 (3 Cyl)	Mercury/Mariner	1990 - 2016	USA	0C222000 and up	803061T 1(1)
75 (3 Cyl)	Mercury/Mariner	1990 - 2016	BEL	9589039 and up	803061T 1(1)
80 (3 Cyl)	Mercury/Mariner	1987 - 2016	USA	0A996142 and up	803061T 1(1)
80 (3 Cyl)	Mercury/Mariner	1987 - 2016	BEL	9483121 and up	803061T 1(1)

Model	Brand	Year Range	Country	Serial # Range	Thermostat Kit
90 (3 Cyl)	Mercury/Mariner	1987 - 2016	USA	0A996142 and up	803061T 1(1)
90 (3 Cyl)	Mercury/Mariner	1987 - 2016	BEL	9483121 and up	803061T 1(1)
100 (4 Cyl)	Mercury/Mariner	1988 - 2016	USA	0B209468 and up	803061T 1(1)
100 (4 Cyl)	Mercury/Mariner	1988 - 2016	BEL	9523034 and up	803061T 1(1)
115 (4 Cyl)	Mercury/Mariner	1989 - 2016	USA	0C100000 and up	803061T 1(1)
115 (4 Cyl)	Mercury/Mariner	1989 - 2016	BEL	9559771 and up	803061T 1(1)
125 (4 Cyl)	Mercury/Mariner	1994 - 2016	USA	0D283222 and up	803061T 1(1)
125 (4 Cyl)	Mercury/Mariner	1994 - 2016	BEL	9793577 and up	803061T 1(1)

(1) Includes new thermostat, thermostat gasket, washer and cover gasket.

(2) Includes thermostat & gaskets.

(3) Includes thermostat, gaskets and poppet valve.

VERTICAL MANUAL STARTER ROPE GUIDE

Converts a manual start from a horizontal to a vertical direction pull.

STARTER ROPE GUIDE



16839A 4

Fits Mercury/Mariner 4/5 hp. (1 cyl.) 2 cycle outboards (USA 0A855097 and Newer, BEL 9589154 and Newer) and Mercury/Mariner 4/5/6 hp. FourStroke outboards.

CARBURETOR ANTI-ICING KITS

Where carburetor icing is common, kit uses hot water from the engine to heat the carburetor. Used on electric or manual models.

CARBURETOR ANTI-ICING KIT



828155A 8

Sea Pro/Marathon models from 1994 thru 1997 will require a thermostat kit if one has not already been installed.

Fits Mercury / Mariner 30/40 hp. (2 cyl.) 2 cycle Sea Pro/Marathon outboards (USA 0G055314 and Newer, BEL 9854537 and Newer), and fits Mercury / Mariner 30/40 hp. (2 cyl.) 2cycle outboards (USA 0G590000 and Newer, BEL 9928481 and Newer).

CARBURETOR ANTI-ICING KIT



828155A 3

Any engine not already having a thermostat will require the addition of an appropriate thermostat kit from the thermostat chart.

Fits Mercury / Mariner 50/60 hp. (3 cyl.) 2 cycle outboards (USA 0G589999 and prior, BEL 9973099 and prior).

CARBURETOR ANTI-ICING KIT



828155A 6

The 55/60 hp. manual start models will require the addition of a thermostat kit.

Fits Mercury / Mariner 40 hp. (3 cyl.) 2 cycle outboards (USA 0G531301 and Newer, BEL 9973100 and Newer) and 50/55/60 hp. (3 cyl.) 2 cycle outboards (USA 0G590000 and Newer, BEL 9973100 and Newer).

CARBURETOR ANTI-ICING KIT



828155A 4

1994 and older manual start models must also order washer p/n 12-47533-1.

Fits Mercury / Mariner 75/90 hp. (3 cyl.) 2 cycle outboards.

CARBURETOR ANTI-ICING KIT



828517A 1

Includes a 143 degree thermostat.

Fits Mercury / Mariner 6-15 hp. and 20/25 hp. (2 cyl.) 2 cycle outboards.

CARBURETOR ANTI-ICING KIT



856642A 2

Includes hoses and fittings.

Fits Mercury / Mariner 135-225 V-6 outboards (0G303046 and Newer) with Walbro "WMV" series carburetors.

REMOTE OIL TANK CONVERSION KITS

Converts the engine to use a remote pressurized 3 US gal (11 L) oil tank.

REMOTE OIL TANK KIT



1263-812718A 2

Includes remote oil tank, on board tank, lines, fittings and hardware.

Fits Mercury / Mariner 50/60 hp. (3 cyl., 51.8 CID) 2 cycle outboards (USA 0D182000 and Newer, BEL 9793445 and Newer).

REMOTE OIL TANK KIT



1257- 8742A25

Includes remote oil tank, lines, fittings and hardware to convert to a pressurized remote 2 cycle oil tank system.

Fits Mercury/Mariner 75,90,115 hp (1.5L) OptiMax outboards, model year 2004 and newer.

REMOTE OIL TANKS AND COMPONENTS

Remote pressurized oil tank reservoir system.

REMOTE 1.8 US GAL (6.8 L) OIL TANK



15943A 1

Remote 1.8 US gal (6.8 L) Oil Tank, complete with tank, lines mounting bracket and all hardware.

Optional tank size for Mercury / Mariner 2 cycle outboards, to be used wherever a pressurized oil reservoir system is already in use.

REMOTE 3.0 US GAL (11 L) OIL TANK



1257- 8742A21

Remote 3.0 US gal (11 L) Oil Tank with sender, complete with tank, lines, floor mounting bracket and all hardware.

REMOTE 3.0 US GAL (11 L) OIL TANK



1257- 8742A22

Remote 3.0 US gal (11 L) Oil Tank without sender, complete with tank, lines, floor mounting bracket and all hardware.

Optional tank size for Mercury/Mariner 2 cycle outboards, to be used wherever a pressurized oil reservoir system is already in use. This tank and bracket assembly is only used in floor mounted applications.

REMOTE 3.0 US GAL (11 L) OIL TANK



1257- 8742A23

Remote 3.0 US gal (11 L) Oil Tank without sender, complete with tank, lines, mounting bracket and all hardware. Old Bracket Design

Optional tank size for Mercury/Mariner 2 cycle outboards, to be used wherever a pressurized oil reservoir system is already in use. This tank and bracket assembly may be optionally floor or wall mounted.

OIL TANK HOLD DOWN KIT



12335A 1

With bracket, strap and hardware.

Fits the 3.0 gallon (11 L) remote oil reservoir tank. This optional bracket may be either floor or wall mounted as desired.

OIL TANK HOLD DOWN KIT



884481A 1

With floor bracket, strap and hardware.

Fits the 3.0 gallon (11 L) remote oil reservoir tank. Bracket may only be used as a floor mounted application.

OIL TANK HOLD DOWN KIT



824954A 1

With bracket, strap and hardware.

Fits the 1.8 gallon (6.8 L) remote oil reservoir tank.

OIL TANK HOSE EXTENSION



41729A 3

Includes 30 ft. (9.14 m) of double barrel hose and 4 tie straps.

Can be used with either remote oil reservoir tank which requires a longer hose due to location.

DECK OIL FILL KIT

Allows filling remote oil reservoirs from deck mounted filler pipe.

DECK FILL KIT - OIL (STRAIGHT ELBOW)



15969A09

Complete with deck fittings, 4 ft. (1.22 m) fill hose, filler cap and necessary mounting hardware.

For use with 1.8 US gal (6.8 L) or 3 US gal (11 L) remote oil tank reservoirs. This kit must NOT be used with Auto Blend.

DECK FILL KIT - OIL (80 DEGREE ELBOW)



15969A10

Complete with deck fittings, 4 ft. (1.22 m) fill hose, filler cap and necessary mounting hardware.

For use with 1.8 US gal (6.8 L) or 3 US gal (11 L) remote oil tank reservoirs. This kit must NOT be used with Auto Blend.

REPLACEMENT TANK ADAPTOR



15967

For use with 1.8 US gal (6.8 L) or 3 US gal (11 L) remote oil tank reservoirs. This kit must NOT be used with Auto Blend.

FILL CAP O-RING



25- 11332

Replacement O-Ring for Fill Cap

2.225 x .210

DECK FILL KIT - OIL (STRAIGHT ELBOW)



15969A13

Comes with deck fittings, filler cap and mounting hardware. Oil fill hose must be ordered separately to complete the assembly.

For use with 1.8 US gal (6.8 L) or 3 US gal (11 L) remote oil tank reservoirs. This kit must NOT be used with Auto Blend.

DECK FILL KIT - OIL (80 DEGREE ELBOW)



15969A11

Comes with deck fittings, filler cap and mounting hardware. Oil fill hose must be ordered separately to complete the assembly.

For use with 1.8 US gal (6.8 L) or 3 US gal (11 L) remote oil tank reservoirs. This kit must NOT be used with Auto Blend.

BULK OIL FILL HOSE



32-850719

Helical corrugated cover, helical non-metallic reinforcement, smooth wall PVC. 1 1/2 " (38 mm) x 100 ft. (30 m)

For use with a deck oil fill kit and the 1.8 US gal (6.8 L) or 3 US gal (11 L) remote oil tank reservoirs. This kit must NOT be used with Auto Blend.

FRONT LOW WATER PICK-UP PLUG KIT

Used in special applications where debris is plugging the low water pick-ups in the nose of the gearcase. This will also limit the amount of cooling water flow. Do not use this kit if the side water pick-ups are out of the water when the boat is on plain.

WATER INLET PLUG KIT



895764A01

Contains two plugs, o-ring and shift shaft gasket.

Plugs the front low water pick-up on the gearcase for the 3.0L EFI/Optimax outboards with the shift shaft bushing assembly that is fastened with 2 screws.

WATER INLET PLUG KIT



8M0052921

Contains plugs and gasket to seal the low water pickups from injesting debris into the engine water cooling passages.

Fits the Verado gearcase and the Torquemaster II with the shift shaft bushing fastened with 4 screws.

GEAR HOUSING REPLACEMENT SKEGS

REPLACEMENT SKEG



898245A01

Fits Verado outboards, 135 through 300 hp. and 3.0L gearcases that have a 4.80 inch diameter torpedo.

REPLACEMENT SKEG



8M0052924

Precision die cast 360XK alloy for stronger, more uniform welds.

Fits the Verado and 3.0L gearhousings with a 5.44 inch diameter torpedo.

REPLACEMENT SKEG



15985A02

Precision die cast 360XK alloy for stronger, more uniform welds.

Fits Mercury / Mariner 50/55/60 Bigfoot (3 cyl.), 70/75/80/90 (USA 0A996142 and Newer, BEL 9483121 and Newer), 100/115/125 (0B209468 and Newer), Force 90/120 (s/n 0E093700 and Newer) and 75/90/115 FourStroke (1B366823-2B094955).

REPLACEMENT SKEG



859447A 1

Precision die cast 360XK alloy for stronger, more uniform welds.

Fits Mercury / Mariner 75/80 (4 cyl.), 90/115 (6 cyl.) and most V-6 outboard models including 2.5L OptiMax. Has adequate depth for the 3.0L models but is not an exact silhouette of the original skeg.

REPLACEMENT SKEG



8M0090442

Precision die cast 360XK alloy for stonger, more uniform welds.

Fits the standard gearcase on the F75-115 hp. (2.1L) FourStroke outboards, serial number 2B094996 and above.

NEW

REPLACEMENT SKEG



8M0060147

Pecision die cast 360XK alloy for stronger, more uniform welds.

Fits the Mercury/Mariner F150 hp. EFI FourStroke 4 cylinder outboard, and the F75-115 hp. (2.1L) FourStroke Command Thrust outboard serail number 2B094996 and above..

REPLACEMENT SKEG



FK719059

Precision die cast 360XK alloy for stronger, more uniform welds.

Fits Force 85/90/100/120/150 hp. outboards (s/n 0E093699 and prior).

AIR FILTERS

AIR FILTER



35-8M0082911

Fits the 75-115 EFI FourStroke outboards (1731cc) serial number 1B366823-2B094995.

AIR FILTER



35-896247

Fits the L-4 Verado outboard.

AIR FILTER



35-893318T02

Fits the L-6 Verado outboard.

OIL FILTERS - FOURSTROKE OUTBOARD

FOURSTROKE OUTBOARD OIL FILTER



35-822626K03

Replaceable screw-on type canister filters.

Fits Mercury/Mariner 8/9.9 hp. FourStroke outboards (323cc) , 15/20 hp. FourStroke carbureted outboards, and the 25/30 hp. EFI FourStroke outboard (MY2006 & newer).

Mercury Branded, Box Point of Sale Packaged.

FOURSTROKE OUTBOARD OIL FILTER



35-822626Q03

FourStroke Outboard replaceable screw-on type canister filters.

Fits Mercury/Mariner 8/9.9 hp. FourStroke outboards (323cc) , 15/20 hp. FourStroke carbureted outboards, and the 25/30 hp. EFI FourStroke outboard (MY2006 & newer).

Quicksilver Branded, Box Point of Sale Packaged.

FOURSTROKE OUTBOARD OIL FILTER



35-8M0065104

Replaceable screw-on type canister filters.

Fits Mercury/Mariner 25 hp. FourStroke (Carb, MY2006 & prior), 30 hp. FourStroke (3 cyl., MY2005 & prior), all 40-60 hp. FourStroke outboards (MY 1998 & newer), all 75-115 hp. FourStroke outboards (USA 1B366822 & prior), and all 75-115 hp. FourStroke outboards (USA 2B094996 and above).

Mercury Branded, Box Point of Sale Packaged.

FOURSTROKE OUTBOARD OIL FILTER



35-8M0065103

FourStroke Outboard replaceable screw-on type canister filters.

Fits Mercury/Mariner 25 hp. FourStroke (Carb, MY2006 & prior), 30 hp. FourStroke (3 cyl., MY2005 & prior), all 40-60 hp. FourStroke outboards (MY 1998 & newer), all 75-115 hp. FourStroke outboards (USA 1B366822 & prior), and all 75-115 hp. FourStroke outboards (USA 2B094996 and above).

Priced individually, sold @ multiples of 6

Quicksilver Branded, Box Point of Sale Packaged.

OIL DRIP TRAY



8M0052100

After the oil resevoir has been properly drained, this tray when in place will help to prevent oil from dripping into the lower cowl when removing the side mounted engine filters listed in the application.

Fits the F25/30hp. EFI FourStroke Outboards and the F40-60hp. FourStroke outboards.

FOURSTROKE OUTBOARD OIL FILTER



35-822626T 7

Replaceable screw-on type canister filters. Requires filter wrench 91-888734.

Fits Mercury/Mariner 225 hp. (V-6) FourStroke outboard.

FOURSTROKE OUTBOARD OIL FILTER



35-822626Q15

Replaceable screw-on type canister filters.

Fits Mercury/Mariner V-225 hp. (V-6) FourStroke outboard and also replaces Yamaha 225 hp. four stroke outboard filter 69J-13440-00-00.

Quicksilver Branded

FOURSTROKE OUTBOARD OIL FILTER



35-877761K01

Replaceable screw-on type canister filter.

Fits the 75/90/115 hp. FourStroke outboard (USA 1B366823-2B094995 1731 cc.) and the new 150 hp. EFI FourStroke outboard.

Mercury Branded, Box Point of Sale Packaged.

FOURSTROKE OUTBOARD OIL FILTER



35-877761Q01

Replaceable screw-on type canister filter.

Fits the 75/90/115 hp. FourStroke outboard (USA 1B366823-2B094995, 1731 cc.) and the 150 hp. EFI FourStroke outboard.

Quicksilver Branded, Box Point of Sale Packaged.

FOURSTROKE OUTBOARD OIL FILTER



35-877767K01

Replaceable screw-on type canister filter.

Fits the 135/150/175/200 hp. Verado In-line 4 cylinder outboard.

Mercury Branded, Box Point of Sale Packaged.

FOURSTROKE OUTBOARD OIL FILTER



35-877767Q01

Replaceable screw-on type canister filter. Replaces the production 896546_ series oil filter.

Fits the 135/150/175/200 hp. Verado In-line 4 cylinder outboard.

Quicksilver Branded, Box Point of Sale Packaged.

FOURSTROKE OUTBOARD OIL FILTER



35-877769K01

Replaceable screw-on type canister filter.

Fits the 200/225/250/275/300/350/400R hp. Verado In-line 6 cylinder outboard.

Mercury Branded, Box Point of Sale Packaged.

FOURSTROKE OUTBOARD OIL FILTER



35-877769Q01

Replaceable screw-on type canister filter. Replaces the production 883701_ series oil filter.

Fits the 200/225/250/275/300/350/400R hp. Verado In-line 6 cylinder outboard.

Quicksilver Branded, Box Point of Sale Packaged.

OIL FILTER WRENCH



91-802653K02

This is a formed metal tool for strength and durability.

Fits replaceable screw-on type canister oil filters wherever found on current Mercury/Mariner FourStroke outboards 9.9 thru 60 hp., and also the 75-115 hp. s/n 1B366822 & below.

Priced individually, sold @ multiples of 2

Mercury Branded, Clamshell Package Point of Sale Packaged.

91-802653Q02

This is a formed metal tool for strength and durability.

Fits replaceable screw-on type canister oil filters wherever found on current Mercury/Mariner FourStroke outboards 9.9 thru 60 hp., the 75-115 hp. s/n 1B366822 & below, and the 75-115 hp. s/n 2B094996 and above..

Priced individually, sold @ multiples of 2

Quicksilver Branded, Clamshell Package Point of Sale Packaged.

OIL FILTER WRENCH



91-889277002

Made of metal. Requires a 3/8" drive.

Fits the Mercury 35-822626T 7 screw-on type canister oil filter found on the V-225 hp. FourStroke outboard.

OIL FILTER WRENCH



91-889277

Made of metal. Requires a 3/8" drive.

Fits the Quicksilver 35-822626Q15 screw-on type canister oil filter found on the V-225 hp. FourStroke outboard and the new 877767__ & 877769__ series filters for the 135-300 Verado.

OIL FILTER WRENCH



91-889277K01

Metal wrench, requires a 3/8 in. drive ratchet.

Fits the (877761__) oil filter found on the 75-115 EFI FourStroke outboard (serial number 1B366823-2B094955) and the 150 hp. EFI FourStroke outboard.

Mercury Branded, Clamshell Package Point of Sale Packaged.

91-889277Q01

Metal wrench, requires a 3/8 in. drive ratchet.

Fits the (877761__) oil filter found on the 75-115 EFI FourStroke outboard (serial number 1B366823-2B094995) and the 150 hp. EFI FourStroke outboard.

Quicksilver Branded, Clamshell Package Point of Sale Packaged.

OIL FILTER WRENCH



91-889277K03

Metal wrench, requires a 3/8 in. drive ratchet.

Fits the 896546_ series & 883701_ series oil filter found on the early Verado 135-275 hp. FourStroke outboards.

Mercury Branded, Clamshell Package Point of Sale Packaged.

91-889277Q03

Metal wrench, requires a 3/8 in. drive ratchet.

Removes the 896546_ series & 883701_ series production oil filters found on the early Verado 135-275 hp. FourStroke outboards.

Quicksilver Branded, Clamshell Package Point of Sale Packaged.

OIL DRAIN FUNNEL KIT



91-892866A01

Helps to direct draining crankcase oil past the cavitation plate.

Fits the XL version of the L6 Verado outboard.

OUTBOARD

OIL DRAIN PUMP



802889Q 1

8/9.9 4-stroke outboards require additional adapter 828369

Fits all MCM/MIE engines with threaded fitting on dipstick tube, and Mercury/ Mariner 8/9.9 FourStroke outboards MY2004 and prior.

Quicksilver Branded, Hanging Box Point of Sale Packaged.

OIL PUMP EXTRACTION TUBE



32-859717A 2

.375 in O.D. tube, 19.5 in. long

Connects to the crankcase oil pump for use on the Zeus drive and various Mercury/ Mariner FourStroke outboards.

ADAPTER



828369

Adapts the standard threaded style MerCruiser crankcase pump for use on the Mercury/Mariner 8/9.9 hp. FourStroke outboards (MY2004 & prior) and the 15hp. FourStroke outboard (323cc).

LIFTING DEVICES - OUTBOARD

LIFTING STRAP



91-883705T01

An engine lifting strap for handling of the 225 EFI FourStroke outboard.

LIFTING EYE/FLYWHEEL PULLER



91-895343T02

A combination tool utilized for both lifting the engine and for pulling the flywheel.

Fits the 75-115 hp. FourStroke outboards (s/n 1B366823 and above), 135-300 hp. Verado outboards and the F150 EFI FourStroke outboard.

MERCATHODE

Automatically protects the drive unit from galvanic corrosion. The increased output provides greater protection for underwater aluminum parts. Its reliable, efficient operation requires an insignificant amount of current when protection is needed.

MERCATHODE KIT



88334A 2

Transom mounted system is mounted with the anode and reference electrode on (and through) the transom of the boat on opposite sides of the drive. The new Gen III Mercahode controller with the blue decal is mounted inside the boat.

Fits all boat applications with a 12 volt operating system.

MERCATHODE ANODE



72957A 5

Replacement anode assembly for 88334 series Mercathode systems.

MERCATHODE ELECTRODE



72958A 5

Replacement electrode assembly for 88334 series Mercathode systems.

MERCATHODE REFERENCE ELECTRODE TESTER



91- 76675T 1

Use with a digital multimeter to test the function of Mercathode systems

KICKER STRAP KIT

KICKER STRAP KIT



896297A01

Aids power tilt versions in preventing excessive bouncing and stress to transom clamp brackets when fully tilted. Will automatically straighten engine in fully trimmed position. If kicker is attached to main engine for steering, attachment must be disconnected for main engine steering when the kicker engine is not in use.

Furnished standard with the MY 2005 & newer, 9.9 hp. ELHPT FourStroke, this kit can be added to the MY 2005 & newer, 9.9 hp. ELPT & EXLPT models.

ANODES - OUTBOARD KITS

ANODE KIT

Image not Available.

97-8M0107547

Aluminum anodes - For use in saltwater or freshwater.
This is a complete anode kit to replace all factory installed anodes found on the transom and gearcase. Fasteners are included.

NEW

Fits Mercury/Mariner: 40-60HP EFI FourStroke BigFoot/Command Thrust only, 75-115HP EFI FourStroke (1B366823-2B094995), 75-115HP EFI FourStroke (2B094996 and Up) Standard gearcase model only.

Mercury Branded, Box Point of Sale Packaged.

97-8M0107546

Aluminum anodes - For use in saltwater or freshwater.
This is a complete anode kit to replace all factory installed anodes found on the transom and gearcase. Fasteners are included.

NEW

Fits Mercury/Mariner: 40-60HP EFI FourStroke BigFoot/Command Thrust only, 75-115HP EFI FourStroke (1B366823-2B094995), 75-115HP EFI FourStroke (2B094996 and Up) Standard gearcase model only.

Quicksilver Branded, Box Point of Sale Packaged.

97-8M0107549

Aluminum anodes - For use in saltwater or freshwater.
This is a complete anode kit to replace all factory installed anodes found on the transom and gearcase. Fasteners are included.

NEW

Fits Mercury/Mariner: 75-115HP EFI FourStroke (2B094996 and Up) BigFoot and Command Thrust gearcase only, 150HP EFI FourStroke (1B905505 and Up).

Mercury Branded, Box Point of Sale Packaged.

97-8M0107548

Aluminum anodes - For use in saltwater or freshwater.
This is a complete anode kit to replace all factory installed anodes found on the transom and gearcase. Fasteners are included.

NEW

Fits Mercury/Mariner: 75-115HP EFI FourStroke (2B094996 and Up) BigFoot and Command Thrust gearcase only, 150HP EFI FourStroke (1B905505 and Up).

Quicksilver Branded, Box Point of Sale Packaged.

97-8M0107551

Aluminum anodes - For use in saltwater or freshwater.
This is a complete anode kit to replace all factory installed anodes found on the transom and gearcase. Fasteners are included.

NEW

Fits Mercury/Mariner: 135-200HP 4 cylinder Verado, 75-115 (1.5L) and 135-250HP (2.5L and 3.0L) Optimax engines.

Mercury Branded, Box Point of Sale Packaged.

97-8M0107550

Aluminum anodes - For use in saltwater or freshwater.
This is a complete anode kit to replace all factory installed anodes found on the transom and gearcase. Fasteners are included.

NEW

Fits Mercury/Mariner: 135-200HP 4 cylinder Verado, 75-115 (1.5L) and 135-250HP (2.5L and 3.0L) Optimax engines.

Quicksilver Branded, Box Point of Sale Packaged.

ANODE KIT



8M0058684

Aluminum anodes - For use in saltwater or freshwater.
This is a complete anode kit to replace all factory installed anodes found on the transom and gearcase. Fasteners are not included.

Fits the 6 cylinder, 200-300Hp. Verado outboards.

Mercury Branded, Box Point of Sale Packaged.

8M0058677

Aluminum anodes - For use in saltwater or freshwater.
This is a complete anode kit to replace all factory installed anodes found on the transom and gearcase. Fasteners are not included.

Fits the 6 cylinder, 200-300Hp. Verado outboards.

Quicksilver Branded, Box Point of Sale Packaged.

OUTBOARD

ANODE BULK PACK



8M0059338

25 Aluminum Trim Tab anodes per box. Equivalent to the individually packaged 31640T4/Q4.

Fits most Mercury/Mariner outboards 35 hp. & above and all MerCruiser except Bravo. Check for adequate propeller clearance prior to operation.

ANODE BULK PACK



8M0059339

10 Aluminum Anodic Plates per box. Equivalent to individually packaged 76214Q5/T5. Provides additional clearance for high rake propellers.

Fits Mercury/Mariner 35-300hp, Force 90 & 120hp 1995 and newer, MerCruiser Alpha One Gen II and Bravo I, II, III, X XR & XZ drives.

ANODE POWER TRIM BULK PACK



8M0059343

20 Aluminum Power Trim Tab anodes per box.
Located on the bottom of the external power trim pump assembly. Equivalent to the 818298Q1/T1. No hardware is included in the bulk pack of 20 pieces.

Fits Mercury/Mariner 30/40 FourStroke, 40 (4 cylinder), 50 (3 cylinder 1987-1997), 55 (3 cylinder), 60-90 (3 cylinder 1987 & newer), 75 (4 cylinder), 75/90 FourStroke, 100-125 (4cyl), 115 (6 cylinder 1984-1988), and all V-6 and OptiMax outboard engines.

ANODE SIDE POCKET BULK PACK



8M0059344

10 Aluminum side pocket anodes per box
Located in side pockets on the gearhousing just above the cavitation plate. Equivalent to the 826134Q/T. No hardware included in this bulk pack of 10 pieces.

Fits Mercury/Mariner 30-300hp outboards and also fits Force 90 & 120hp 1995 and newer outboards.

ANODES - TRIM TAB/PLATE

ANODE



14205M

Aluminum

Fits Mariner 6C (6H8), 6D (6H6), and 8C (6G1).

ANODE PLATE



15300

Zinc

TRIM TAB



17264T 2

Fits Force Model 70B (1991), Force 70A (1992), Force 70C (1991-1992), Force 70 (0E000001-0E138599), Force 75 (0E138600-0E344999), Mercury/Mariner F40 FourStroke, 3 cylinder, Longshaft (CHN 1C000001-1C049738), Mercury/Mariner F40/50/60 FourStroke 996cc (standard gearcase 1.83:1 ratio) and also fits the Mercury/Mariner 50hp. 2-cycle, 3 cylinder, standard gearcase (USA 0D000750-0G589999, BEL 9683055-9973099), and 55/60hp. 2-cycle, 3 cylinder, standard gearcase (USA 0D000750 and above, BEL 9683055 and above).

TRIM TAB



31640T 4

Aluminum

Fits most Mercury/Mariner outboards 35 hp. & above and all MerCruiser except Bravo. Check for adequate propeller clearance prior to operation.

Mercury Branded, Clamshell Package Point of Sale Packaged.

31640Q03

Magnesium - For freshwater use only. Do not use in Saltwater applications.

Fits most Mercury/Mariner outboards 35 hp. & above and all MerCruiser except Bravo. Check for adequate propeller clearance prior to operation.

31640Q 4

Aluminum

Fits most Mercury/Mariner outboards 35 hp. & above and all MerCruiser except Bravo. Check for adequate propeller clearance prior to operation.

Quicksilver Branded, Clamshell Package Point of Sale Packaged.

31640T 6

Magnesium - For freshwater use only. Do not use in Saltwater applications.

Fits most Mercury/Mariner outboards 35 hp. & above and all MerCruiser except Bravo. Check for adequate propeller clearance prior to operation.

TRIM TAB



31640T07

EDP - Black, this painted tab will not perform an anodic function.

Fits most Mercury/Mariner outboards 35 hp. & above and all MerCruiser except Bravo. Check for adequate propeller clearance prior to operation.

ANODE KIT



42121Q02

Aluminum, located under the cavitation plate on the following products.

Force Standard Gearcase Models:
9.9/15 hp. 2-cycle MY1998

Mercury/Mariner Standard Gearcase Models:
6/8/9.9 hp. 2-cycle MY1986 & newer
F8/9.9 hp. FourStroke MY1995-2004
F13.5 hp. FourStroke MY2001 & newer
F15 hp. FourStroke MY1998-2006
XR10
10 Marathon
10 Seapro
10 Viking

Quicksilver Branded, Clamshell Package Point of Sale Packaged.

PLATE ASSY



47820A 1

Zinc

ANODIC PLATE



76214T 5

Aluminum
Provides additional clearance for high rake propellers.

Fits Mercury/Mariner 35-300hp, Force 90 & 120hp 1995 and newer, MerCruiser Alpha One Gen II and Bravo I, II, III, X XR & XZ drives.

Priced individually, sold @ multiples of 2

Mercury Branded, Clamshell Package Point of Sale Packaged.

76214Q 5

Aluminum
Provides additional clearance for high rake propellers.

Fits Mercury/Mariner 35-300hp, Force 90 & 120hp 1995 and newer, MerCruiser Alpha One Gen II and Bravo I, II, III, X XR & XZ drives.

Priced individually, sold @ multiples of 2

Quicksilver Branded, Clamshell Package Point of Sale Packaged.

76214A 6

Magnesium - For freshwater use only. Do not use in saltwater applications.

Fits Mercury/Mariner 35-300 HP, Force 90 & 120 HP 1995 and newer, MerCruiser Alpha One Generation II and Bravo I, II and III drives.

ANODIC PLATE



76214T 1

Aluminum

ANODIC PLATE



76214T 3

Zinc

TRIM TAB



82795T

Zinc

Fits early Mariner models 20C (6A9), 25C (695), 28 (664), 30A (689).

ANODE



83394M

Aluminum

TRIM TAB



83859T

Zinc

Fits early Mariner outboards 40B (676), 40C (6E9), 48 (670), W-48 (670), 55 (663), and 60 (675).

TRIM TAB



94286T 1

Aluminum

Fits the Mercury/Mariner 18/25hp. 2-cycle outboards that use the top inserted screw.

TRIM TAB ANODE



98432T 6

Zinc

Fits Mercury/Mariner 9.9/15hp (323cc) FourStroke Bigfoot, Force 25 hp (0E090400-0E344999) and various Mercury/Mariner 2-cycle outboard models (15 hp SeaPro thru 25 hp).

Mercury Branded, Clamshell Package Point of Sale Packaged.

98432Q 6

Zinc

Fits Mercury/Mariner 9.9/15hp (323cc) FourStroke Bigfoot, Force 25 hp (0E090400-0E344999) and various Mercury/Mariner 2-cycle outboard models (15 hp SeaPro thru 25 hp).

Quicksilver Branded, Clamshell Package Point of Sale Packaged.

TRIM TAB



803833T

EDP painted, this tab will not perform an anodic function.

Fits the Mercury/Mariner 250/275 carbureted models, 1989-1994.

ANODE



811990M

Aluminum

TRIM TAB



822157T 2

Zinc

Fits the F25 FourStroke (Carb models), F30 FourStroke (0G760300-1B226999, 0P094500-0P400999), F40 FourStroke 3-cylinder (0G760300-1B344398, 0P094500 and above), F40/45/50 FourStroke (935cc, standard gearcase).

TRIM TAB ANODE



822777T 1

Aluminum

For applications where extra clearance is required for high rake propellers.

Fits most Mercury/Mariner 35 hp and above, Force 90/120 (1995 and newer), and all Mercury MerCruiser engines.

Mercury Branded, Clamshell Package Point of Sale Packaged.

822777Q 1

Aluminum

For applications where extra clearance is required for high rake propellers.

Fits most Mercury/Mariner 35 hp and above, Force 90/120 (1995 and newer), and all Mercury MerCruiser engines.

Quicksilver Branded, Clamshell Package Point of Sale Packaged.

822777A 2

Magnesium - For freshwater use only. Do not use in saltwater applications.

Fits most Mercury/Mariner 35 hp and above, Force 90/120 (1995 and newer), and all Mercury MerCruiser engines.

ANODE



823913Q

Aluminum

Fits Mercury/Mariner 2.5/3/3.3 hp 2-cycle outboards (1990 and newer), F2.5/3.5 hp. FourStroke (MY 2006 and newer), and 6-40 hp 2-cycle outboards of Japanese origin (serial number 0N000001 & above).

Priced individually, sold @ multiples of 2

TRIM TAB



8M0091534

EDP painted, this tab does not provide anodic protection.

Assists with mechanical steering torgue on standard gearcase models of the F75-115 FourStroke, s/n 2B094996 and above.

ANODES - TRANSOM BRACKET/POWER TRIM

ANODE



18852M

Aluminum

OUTBOARD

POWER TRIM ANODE



818298T 1

Aluminum
Located on the bottom of the external power trim pump assembly.

Fits Mercury/Mariner 30/40 FourStroke, 40 (4 cylinder), 50 (3 cylinder 1987-1997), 55 (3 cylinder), 60-90 (3 cylinder 1987 & newer), 75 (4 cylinder), 75/90 FourStroke, 100-125 (4cyl), 115 (6 cylinder 1984-1988), and all V-6 and OptiMax outboard engines.

Mercury Branded, Clamshell Package Point of Sale Packaged.

818298Q 1

Aluminum
Located on the bottom of the external power trim pump assembly.

Fits Mercury/Mariner 30/40 FourStroke, 40 (4 cylinder), 50 (3 cylinder 1987-1997), 55 (3 cylinder), 60-90 (3 cylinder 1987 & newer), 75 (4 cylinder), 75/90 FourStroke, 100-125 (4cyl), 115 (6 cylinder 1984-1988), and all V-6 and OptiMax outboard engines.

Quicksilver Branded, Clamshell Package Point of Sale Packaged.

818298T 3

Magnesium - For freshwater use only. Do not use in saltwater applications.
Located on the bottom of the external power trim pump assembly.

Fits Mercury/Mariner 30/40 FourStroke, 40 (4 cylinder), 50 (3 cylinder 1987-1997), 55 (3 cylinder), 60-90 (3 cylinder 1987 & newer), 75 (4 cylinder), 75/90 FourStroke, 100-125 (4cyl), 115 (6 cylinder 1984-1988), and all V-6 and OptiMax outboard engines.

ANODE



823912

Aluminum, Round style.

Fits Mercury/Mariner 4/5 hp. 2-cycle (MY1987 & newer), F4/5/6 hp. FourStroke (MY1999 & newer), F8/9.9 hp. FourStroke (MY2005 & newer), 15 hp. 2-cycle Seapro (MY2005 & newer), F25/30 EFI FourStroke (MY2006 & newer).

ANODE KIT



825271 1

Aluminum

Fits the Mercury/Mariner 25hp Carbureted FourStroke outboard Model Years 1998-2006, and also fits the Mercury/Mariner 40/50hp 3 cylinder, 2-cycle outboard (USA 0G590000 & above, BEL 9973100 & above).

PLATE ASSY.



89949A 1

Aluminum

Transom bracket anode that fits Mercury/Mariner V-6 outboards, V-150/150XR-2 (USA 6616990 and below), V-175 (USA 6618750 and below), V-200 (USA 6055032 and below), V-250/275 Carb (0C101891 and above), and the V-3.4 Litre.

ANODE



8M0073429

Zinc

POWER TRIM ANODE

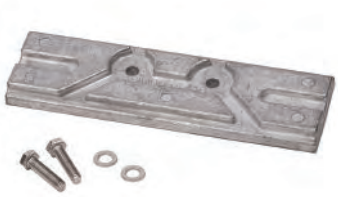

8M0057772

Aluminum. Located on the bottom of the external power trim assembly.
Fits the 150 Hp. EFI FourStroke outboard, 1B905505 and above.

NEW

ANODES - SIDE MOUNTED/POCKET

ANODE



18852M

Aluminum

ANODE



819232

Aluminum, side mounted anode.

Fits Force outboards, 1991 (90E, 90H, 120H), 1992 (90A, 90C, 120A, 120C), and 1992-1994 (90/120/150 0E000001-0E093699).

ANODE



823912

Aluminum, Round style.

Fits Mercury/Mariner 4/5 hp. 2-cycle (MY1987 & newer), F4/5/6 hp. FourStroke (MY1999 & newer), F8/9.9 hp. FourStroke (MY2005 & newer), 15 hp. 2-cycle Seapro (MY2005 & newer), F25/30 EFI FourStroke (MY2006 & newer).

SIDE POCKET ANODE



826134T

Aluminum
Located in side pockets on the gearhousing just above the cavitation plate.

Fits Mercury/Mariner 30-300hp outboards and also fits Force 90 & 120hp 1995 and newer outboards.

Priced individually, sold @ multiples of 3

Mercury Branded, Clamshell Package Point of Sale Packaged.

826134Q

Aluminum
Located in side pockets on the gearhousing just above the cavitation plate.

Fits Mercury/Mariner 30-300hp outboards and also fits Force 90 & 120hp 1995 and newer outboards.

Priced individually, sold @ multiples of 3

Quicksilver Branded, Clamshell Package Point of Sale Packaged.

826134T 3

Magnesium - For freshwater use only. Do not use in saltwater applications.
Located in side pockets on the gearhousing just above the cavitation plate.

Fits Mercury/Mariner 35-300hp outboards and Force 90 & 120hp 1995 and newer outboards

ANODES - PROP NUT/SPOOL

REPLACEMENT PROP NUT ANODE



809662T

2 in. Aluminum Anode Shell
Replacement Shell for 809662A 1

PROP NUT ANODE KIT



809664A 1

1-1/8 in. Shaft, 3/4 in. NF 16

Fits Mercury/Mariner 70 hp and higher outboards (except 225 EFI FourStroke); Also fits MC-I, R, MR, Alpha, Bravo One & TRS sterndrives (1970 & newer)

ANODES - MERCURY THRUSTER

ANODE



M879341T

Aluminum

OUTBOARD

ANODES - MARINER CYL. BLOCK & EXH. TUBE

ANODE



84732M

Zinc

ANODE



83394M

Aluminum

ANODE-HANGING



809690A 1

Aluminum

Provides additional corrosion protection when boat is at mooring. Fits all applications when hung over side of the boat.

ANODE APPLICATION CHARTS

Mercury/Mariner FourStroke Outboard Anodes

Model	Model Notes		Serial # Range	Anodic Trim Tab/ Plate	Mat.	Anodic P/T Plate	Mat.	Side Mounted Anodes	Mat.
4 FourStroke	With round Anode	JPN	0R000001 and up	N/A		N/A		823912	Alum.
		BEL	0P073456 and up						
4 FourStroke	With square Anode	JPN	0R000001 and up	N/A		N/A		875208	Alum.
		BEL	0P073456 and up						
5 FourStroke	With round Anode	JPN	0R000001 and up	N/A		N/A		823912	Alum.
		BEL	0P073456 and up						
5 FourStroke	With square Anode	JPN	0R000001 and up	N/A		N/A		875208	Alum.
		BEL	0P073456 and up						
6 FourStroke	With round Anode	JPN	0R000001 and up	N/A		N/A		823912	Alum.
		BEL	0P073456 and up						
6 FourStroke	With square Anode	JPN	0R000001 and up	N/A		N/A		875208	Alum.
		BEL	0P073456 and up						
8 FourStroke	Standard Gearcase	JPN	0R042475 and up	853762T01	Zinc	N/A		N/A	
		BEL	0P325500 and up						
8 FourStroke	Bigfoot Gearcase	JPN	0R042475 and up	853762T01	Zinc	875208		N/A	
		BEL	0P325500 and up						
8 FourStroke	Bodensee	USA	0G760300 - 0T178499	42121Q02	Alum.	N/A		N/A	
8 FourStroke	Bodensee	BEL	0P086824 - 0P325499	98432T 6	Zinc	N/A		N/A	
9.9 FourStroke	Standard Gearcase	USA	0G760300 - 0T979999	42121Q02	Alum.	N/A		N/A	
9.9 FourStroke	Standard Gearcase	BEL	0P075166 - 0P325499	853762T01	Zinc	875208			
9.9 FourStroke	Standard Gearcase	JPN	0R042475 and up	853762T01	Zinc	N/A		N/A	
		BEL	0P325500 and up						

Model	Model Notes		Serial # Range	Anodic Trim Tab/ Plate	Mat.	Anodic P/T Plate	Mat.	Side Mounted Anodes	Mat.
9.9 FourStroke	Bigfoot Gearcase	USA	0H000058 - 0H016909	98432T 6	Zinc	N/A		N/A	
		USA	0G760300 - 1B226999						
		BEL	0P075166 - 0P400999						
9.9 FourStroke	Bigfoot Gearcase	JPN	0R042475 and up	853762T01	Zinc	875208		N/A	
		BEL	0P325500 and up						
15 FourStroke	Standard Gearcase, 323cc	USA	0G590000 - 1B727495	42121Q02	Alum.	N/A		N/A	
		BEL	9973100 and up						
15 FourStroke	Bigfoot Gearcase, 323cc	USA	0G590000 - 1B727495	98432T 6	Zinc	N/A		N/A	
		BEL	9973100 and up						
15 FourStroke	Sea Pro	JPN	0R051685 and up	803731	Zinc	823913Q		N/A	
15 FourStroke	351cc.	JPN	0R235949 and up	853762T01		875208		N/A	
20 FourStroke	351cc.	JPN	0R235168 and up	853762T01		875208		N/A	
25 FourStroke	Carb	USA	0G590000 - 1B344298	822157T 2	Zinc	825271 1	Alum.	N/A	
		BEL	9973100 - 0P388282						
25 FourStroke	EFI, Manual Trim	JPN	0R106999 and up	853762	Zinc	804043		N/A	
25 FourStroke	EFI, PowerTrim	JPN	0R106999 and up	853762	Zinc	823912002	Alum.	N/A	
25 FourStroke	Sea Pro	JPN	0R051710 and up	853762	Zinc	804043		N/A	
30 FourStroke	3 cylinder	USA	0G760300 - 1B226999	822157T 2	Zinc	818298T 1	Alum.	826134T	Alum.
		BEL	0P094500 - 0P400999						
30 FourStroke	EFI	USA	0T409000 - 1B226999	822157T 2	Zinc	818298T 1	Alum.		
		BEL	0P153500 - 0P400999						
30 FourStroke	EFI, Manual Trim	JPN	0R106999 and up	822157T 2	Zinc	804043			
30 FourStroke	EFI, PowerTrim	JPN	0R106999 and up	822157T 2	Zinc	823912002	Alum.		
40 FourStroke	3 cylinder, Carb	USA	0G760300 - 1B226999	822157T 2	Zinc	818298T 1	Alum.	826134T	Alum.
		BEL	0P094500 - 09400999						
40 FourStroke	3 cylinder, EFI	USA	0T409000 - 1B344398	822157T 2	Zinc	818298T 1	Alum.	N/A	
		BEL	0P153500 and up						
40 FourStroke	3 cylinder, EFI, LongShaft	CHN	1C000001 - 1C049738	17264T 2	Alum.	818298T 1	Alum.	N/A	
40 FourStroke	3 cylinder, EFI, ShortShaft	CHN	1C000001 - 1C049738	822157T 2	Zinc	818298T 1	Alum.	N/A	
40/45 FourStroke	4 cylinder	USA	0G231123 - 0T178499	822157T 2	Zinc	818298T 1	Alum.	N/A	
40 FourStroke	4 cylinder, Carb	USA	0T228405 - 0T598999	822157T 2	Zinc	818298T 1	Alum.	826134T	Alum.
		BEL	0P094500 - 0P206999						
40 FourStroke	4 cylinder, EFI	USA	0T409000 and up	31640T07	EDP	818298T 1	Alum.	826134T	Alum.
		BEL	0P207000 and up						
		CHN	0C000001 and up						
45 FourStroke	BigFoot-Bodensee	USA	0G231123 - 0T178499	31640T07	EDP	818298T 1	Alum.	826134T	Alum.
		BEL	0P017000 and up						
45 FourStroke	Bodensee	USA	0G231123 - 0T178499	822157T 2	Zinc	825271 1	Alum.	N/A	
		BEL	0P017000 and up						
50 FourStroke	Standard Gearcase	USA	0G231123 - 0G760299	822157T 2	Zinc	825271 1	Alum.	N/A	Alum.
50 FourStroke	Standard Gearcase	USA	0G760300 - 0T178499	822157T 2	Zinc	818298T 1	Alum.	N/A	
50 FourStroke	Standard Gearcase	USA	0T178500 - 0T598999	17264T 2	Alum.	818298T 1	Alum.	N/A	
		BEL	9944807 - 0P016999	822157T 2	Zinc	825271 1	Alum.	N/A	
50 FourStroke		BEL	0P017000 - 0P094499	822157T 2	Zinc	818298T 1	Alum.	N/A	
50 FourStroke	Standard Gearcase	BEL	0P094500 - 0P206999	17264T 2	Alum.	818298T 1	Alum.	N/A	
50 FourStroke	Bigfoot Gearcase	USA	0G231123 - 0T598999	31640T07	EDP	818298T 1	Alum.	826134T	Alum.
		BEL	9944807 - 0P206999						
50 FourStroke	EFI	USA	0T409000 - 1B344306	17264T 2	Alum.	818298T 1	Alum.	826134T	Alum.
	EFI	BEL	0P153500 and up	17264T 2	Alum.	818298T 1	Alum.	826134T	Alum.
	EFI	CHN	1C000001 and up	31640T07	EDP	818298T 1	Alum.	826134T	Alum.
60 FourStroke	Carb	USA	0T178500 - 0T598999	31640T07	EDP	818298T 1	Alum.	826134T	Alum.
		BEL	0P094500 - 0P206999						
60 FourStroke	EFI	USA	0T409000 - 1B344306	31640T07	EDP	818298T 1	Alum.	826134T	Alum.
		BEL	0P207000 and up						

OUTBOARD

Model	Model Notes		Serial # Range	Anodic Trim Tab/ Plate	Mat.	Anodic P/T Plate	Mat.	Side Mounted Anodes	Mat.
		CHN	1C000001 and up						
75 FourStroke	Carb	USA	0G960500 - 1B226999	31640T07	EDP	818298T 1	Alum.	826134T	Alum.
75 FourStroke	EFI, 1596 cc	USA	1B172291 - 1B366822	31640T07	EDP	818298T 1	Alum.	826134T	Alum.
75 FourStroke	EFI, 1731 cc	USA	1B366823 - 2B094995	31640T07	EDP	818298T 1	Alum.	826134T	Alum.
75/80 FourStroke	EFI, 2.1L Standard Gearcase	USA	2B094996 and up	8M0091534	EDP	818298T 1	Alum.	826134T	Alum.
	EFI, 2.1L Command Thrust	USA		76214T 5	Alum.	818298T 1	Alum.	826134T	Alum
80 FourStroke	EFI, 1596 cc	USA	1B227000 - 1B366822	31640T07	EDP	818298T 1	Alum.	826134T	Alum.
80 FourStroke	EFI, 1731 cc	USA	1B366823 - 2B094995	31640T07	EDP	818298T 1	Alum.	826134T	Alum.
90 FourStroke	Carb	USA	0G960500 - 1B226999	31640T07	EDP	818298T 1	Alum.	826134T	Alum.
90 FourStroke	EFI, 1596 cc	USA	1B172291 - 1B366822	31640T07	EDP	818298T 1	Alum.	826134T	Alum.
90 FourStroke	EFI, 1731 cc	USA	1B366823 - 2B094955	31640T07	EDP	818298T 1	Alum.	826134T	Alum.
90/100 FourStroke	EFI, 2.1L Standard Gearcase	USA	2B094996 and up	8M0091534	EDP	818298T 1	Alum.	826134T	Alum.
	EFI, 2.1L Comman Thrust	USA		76214T 5	Alum.	818298T 1	Alum.	826134T	Alum.
100 FourStroke	EFI, 1741 cc	USA	1B172291 - 1B366822	31640T07	EDP	818298T 1	Alum.	826134T	Alum.
100 FourStroke	EFI, 1731 cc	USA	1B366823 - 2B094995	31640T07	EDP	818298T 1	Alum.	826134T	Alum.
115 FourStroke	EFI	USA	0T178500 - 2B094995	31640T07	EDP	818298T 1	Alum.	826134T	Alum.
115 FourStroke	EFI, 2.1L Standard Gearcase	USA	2B094996 and up	8M0091534	EDP	818298T 1	Alum.	826134T	Alum.
	EFI, 2.1L Command Thrust	USA		76214T 5	Alum.	818298T 1	Alum.	826134T	Alum.
135 FourStroke	Verado	USA	1B227000 and up	76214T 5	Alum.	818298T 1	Alum.	826134T	Alum.
150 FourStroke	EFI	USA		76214T 5	Alum.	8M0057772	Alum.	826134T	Alum.
150 FourStroke	Verado	USA	1B227000 and up	76214T 5	Alum.	818298T 1	Alum.	826134T	Alum.
175 FourStroke	Verado	USA	1B227000 and up	76214T 5	Alum.	818298T 1	Alum.	826134T	Alum.
200 FourStroke	Verado	USA	1B517159 and up	76214T 5	Alum.	818298T 1	Alum.	826134T	Alum.
200 FourStroke	Verado (6 cyl.)	USA	0T980000 and up	76214T 5	Alum.	880653		826134T	Alum.
						893404(1)			
225 FourStroke	EFI	USA	0T653945 and up	888712		888606			
225 FourStroke	Verado	USA	0T980000 and up	76214T 5	Alum.	880653		826134T	Alum.
						893404(1)			
250 FourStroke	Verado	USA	0T980000 and up	76214T 5	Alum.	880653		826134T	Alum.
						893404(1)			
275 FourStroke	Verado	USA	0T980000 and up	76214T 5	Alum.	880653		826134T	Alum.
						893404(1)			
300 FourStroke	Verado	USA	1B517434 and up	76214T 5	Alum.	880653		826134T	Alum.
						893404(1)			
350 FourStroke	Verado	USA	2B141617 and up	76214T 5	Alum.	8M0012083		826134T	Alum.
						893404(1)			
						8M0001734			

(1) 4 pcs required

Mercury/Mariner 2-Cycle Outboard Anodes

Model	Model Notes		Serial # Range	Anodic Trim Tab/ Plate	Mat.	Anodic P/T Plate	Mat.	Side Mounted Anodes	Mat.
2		USA	0T884302 and up	823913Q	Alum.	N/A		N/A	
2.2M		USA	8075603 and up	823913Q	Alum.	N/A		N/A	
2.5		USA	0A856377 and up	823913Q	Alum.	N/A		N/A	
		BEL	0P017000 and up						
3		USA	0A856377 - 0G710612	823913Q	Alum.	N/A		N/A	
3.3		USA	0D901657 and up	823913Q	Alum.	N/A		N/A	
		BEL	0P017000 and up						
4	1 cylinder	USA	0A809601 - 0G710612	N/A		N/A		823912	Alum.
		BEL	9477830 - 0P016999						
4	With round Anode	USA	0G710613 and up	N/A		N/A		823912	Alum.

Model	Model Notes		Serial # Range	Anodic Trim Tab/ Plate	Mat.	Anodic P/T Plate	Mat.	Side Mounted Anodes	Mat.
		BEL	0P017000 and up						
4	With square Anode	USA	0G710613 and up	N/A		N/A		875208	
		BEL	0P017000 and up						
5	1 cylinder	USA	0A809601 - 0G710612	N/A		N/A		823912	Alum.
		BEL	9477830 - 0P016999						
5	With round Anode	USA	0G710613 and up	N/A		N/A		823912	Alum.
		BEL	0P017000 and up						
5	With square Anode	USA	0G710613 and up	N/A		N/A		875208	
		BEL	0P017000 and up						
6	1 cylinder	USA	0A197112 - 0T800749	42121Q02	Alum.	N/A		N/A	
		BEL	9461526 and up						
7.5 (75)		USA	5206550 and up	N.L.A.	Zinc	N/A		N/A	
		AUS	8057545 and up						
		BEL	9217756 and up						
		CAN	7125388 and up						
8		USA	0A197112 and up	42121Q02	Alum.	N/A		N/A	
		BEL	9461526 and up						
9.8		USA	5206550 and up	N.L.A.	Zinc	N/A		N/A	
		AUS	8057545 and up						
		BEL	9217756 and up						
		CAN	7125388 and up						
9.9		USA	0A197112 and up	42121Q02	Alum.	N/A		N/A	
		BEL	9792200 - 0P325499						
10	XR10/Sea Pro	USA	0D038000 and up	42121Q02	Alum.	N/A		N/A	
		BEL	9596000 and up						
15		USA	0A197112 and up	42121Q02	Alum.	N/A		N/A	
		BEL	9542620 and up						
15		USA	0A197112 and up	98432T 6	Zinc	N/A		N/A	
		BEL	9542620 and up						
15	Sea Pro/Marathon	USA	0G044365 and up	42121Q02	Alum.	N/A		N/A	
		BEL	9927000 and up						
15	Sea Pro/Marathon	USA	0G044365 and up	98432T 6	Zinc	N/A		N/A	
		BEL	9927000 and up						
15	Sea Pro XD	BEL	9927000 - 0P325499	98432T 6	Zinc	N/A		N/A	
18		USA	5837437 - 6416712	94286T 1	Alum.	N/A		N/A	
		AUS	8071973 and up						
		BEL	9308306 - 9378115						
		CAN	7173723 - 7207857						
18		USA	5837437 - 6416712	98432T 6	Zinc	N/A		N/A	
		AUS	8071973 and up						
		BEL	9308306 - 9378115						
		CAN	7173723 - 7207857						
18	Top inserted screw	USA	6416713 - 6443972	94286T 1	Alum.	N/A		N/A	
		BEL	9378116 - 9415100						
		CAN	7207858 - 7209532						
18	Bottom inserted screw	USA	6416713 - 6443972	98432T 6	Zinc	N/A		N/A	
		BEL	9378116 - 9415100						
		CAN	7207858 - 7209532						
18XD		USA	6443973 - 0B238463	98432T 6	Zinc	N/A		N/A	
		BEL	9378151 - 9507380						
		CAN	7209533 - 0A730006						

OUTBOARD

Model	Model Notes		Serial # Range	Anodic Trim Tab/ Plate	Mat.	Anodic P/T Plate	Mat.	Side Mounted Anodes	Mat.
20XD		USA	6443973 - 0B238463	98432T 6	Zinc	N/A		N/A	
		BEL	9415101 - 9507380						
		CAN	7209523 - 0A730006						
20	2 cylinder	USA	0B238464 - 0T979999	98432T 6	Zinc	N/A		N/A	
		BEL	9507381 and up						
		CAN	0A730007 and up						
25		USA	5705532 - 6416712	94286T 1	Alum.	N/A		N/A	
		AUS	8073258 and up						
		BEL	9315316 - 9378115						
		CAN	7166928 - 7207857						
25	Bottom inserted screw	USA	6416713 - 6443972	98432T 6	Zinc	N/A		N/A	
		CAN	7207858 - 7209532						
		BEL	9378116 - 9415100						
25	Top inserted screw	USA	6416713 - 6443972	94286T 1	Alum.	N/A		N/A	
		CAN	7207858 - 7209532						
		BEL	9378116 - 9415100						
25XD		USA	6443973 - 0B238463	98432T 6	Zinc	N/A		N/A	
		BEL	9415101 - 9507380						
		CAN	7209533 - 0A730006						
25	Standard & Sea Pro	USA	0B238464 and up	98432T 6	Zinc	N/A		N/A	
		BEL	9507381 and up						
		CAN	0A730007 and up						
30	2 cylinder	USA	0G053314 - 0T598999	822157T 2	Zinc	825271 1	Alum.	N/A	
30		BEL	9854537 - 0P206999						
35	2 cylinder	USA	6445653 and up	31640T 4	Alum.	N/A		N/A	
		CAN	209608 and up						
		BEL	9384476 and up						
35	2 cylinder	USA	6445653 and up	31640Q03	Magn.	N/A		N/A	
		CAN	209608 and up						
		BEL	9384476 and up						
40	2 cylinder	USA	2874704 - 0G053313	31640T 4	Alum.	825271 1	Alum.	N/A	
		AUS	8002335 and up						
		BEL	3339688 - 0P016999						
		CAN	3340783 and up						
40	2 cylinder	USA	2874704 - 0G053313	31640Q03	Magn.	818298T 3	Magn.	N/A	
		AUS	8002335 and up						
		BEL	3339688 - 0P016999						
		CAN	3340783 and up						
40	2 cylinder	USA	0G053314 and up	822157T 2	Zinc	N/A	Zinc	N/A	
		BEL	0P017000 and up						
40	3 cylinder	USA	0G590000 - 0T999999	822157T 2	Zinc	825271 1	Alum.	N/A	
		BEL	9973100 and up						
40	4 cylinder	USA	0C159200 and up	31640T 4	Alum.	818298T 1	Alum.	N/A	
		BEL	9570790 and up						
40	4 cylinder	USA	0C159200 and up	31640Q03	Magn.	818298T 3	Magn.	N/A	
		BEL	9570790 and up						

Model	Model Notes		Serial # Range	Anodic Trim Tab/ Plate	Mat.	Anodic P/T Plate	Mat.	Side Mounted Anodes	Mat.
45	4 cylinder	USA	5531630 and up	31640T 4	Alum.	N/A		N/A	
		AUS	8063985 and up						
		BEL	9248006 and up						
		CAN	7143688 and up						
45	4 cylinder	USA	5531630 and up	31640Q03	Magn.	N/A		N/A	
		AUS	8063985 and up						
		BEL	9248006 and up						
		CAN	7143688 and up						
50	4 cylinder	USA	4357640 and up	31640T 4	Alum.	N/A		N/A	
		AUS	8030090 and up						
		BEL	9107214 and up						
		CAN	7068998 and up						
50	4 cylinder	USA	4357640 and up	31640Q03	Magn.	N/A		N/A	
		AUS	8030090 and up						
		BEL	9107214 and up						
		CAN	7068998 and up						
50	3 cylinder	USA	6428681 - 0B122929	31640T 4	Alum.	N/A		N/A	
		BEL	9385911 - 9469199						
		CAN	7208333 - 0A7211307						
50	3 cylinder	USA	0B122930 - 0D000749	31640T 4	Alum.	818298T 1	Alum.	N/A	
		BEL	9469200 - 9683054						
		CAN	0A721308 and up						
50	3 cylinder	USA	0D000750 - 0G589999	17264T 2	Zinc	818298T 1	Alum.	N/A	
		BEL	9683055 - 9973099						
50	3 cylinder, BigFoot	USA	0D000750 - 0G589999	31640T 4	Alum.	818298T 1	Alum.	826134T	Alum.
		BEL	9683055 - 9973099						
50	3 cylinder	USA	0G590000 and up	822157T 2	Zinc	825271 1	Alum.	N/A	
		BEL	9973100 and up						
55	3 cylinder (1.64:1 ratio)	USA	0D000750 and up	17264T 2	Zinc	818298T 1	Alum.	N/A	
		BEL	9741042 and up						
60	3 cylinder	USA	6428681 - 0B122929	31640T 4	Alum.	N/A		N/A	
		BEL	9385911 - 9469199						
		CAN	7208333 - 0A7211307						
60	3 cylinder	USA	0B122930 - 0D000749	31640T 4	Alum.	818298T 1	Alum.	N/A	
		BEL	9469200 - 9683054						
		CAN	0A721308 and up						
60	3 cylinder	USA	0D000750 and up	17264T 2	Zinc	818298T 1	Alum.	N/A	
		BEL	9683055 and up						
60	3 cylinder, BigFoot	USA	0D000750 - 0G760299	31640T 4	Alum.	818298T 1	Alum.	826134T	Alum.
		BEL	9683055 - 0P016999						
60	3 cylinder, BigFoot	USA	0G760300 and up	31640T07	EDP	818298T 1	Alum.	826134T	Alum.
		BEL	0P017000 and up						
65 (650)	4 cylinder	USA	1542745 - 3293183	31640T 4	Alum.	N/A		N/A	
65 (650)		USA	1542745 - 3293183	31640Q03	Magn.				
65 (650)	3 cylinder	USA	3293184 - 4571651	31640T 4	Alum.	N/A		N/A	
		AUS	8006640 - 8042349						
		BEL	9020074 - 9135824						
		CAN	7013633 - 7087822						
65 (650)	3 cylinder	USA	3293184 - 4571651	31640Q03	Magn.	N/A		N/A	
		AUS	8006640 - 8042349						
		BEL	9020074 - 9135824						
		CAN	7013633 - 7087822						
70	3 cylinder	USA	4571652 - 0A996141	31640T 4	Alum.	N/A		N/A	
		AUS	8042350 and up						

OUTBOARD

Model	Model Notes		Serial # Range	Anodic Trim Tab/ Plate	Mat.	Anodic P/T Plate	Mat.	Side Mounted Anodes	Mat.
		BEL	9135825 - 9385910						
		CAN	7087823 - 7208332						
70	3 cylinder	USA	4571652 - 0A996141	31640Q03	Magn.	N/A		N/A	
		AUS	8042350 and up						
		BEL	9135825 - 9385910						
		CAN	7087823 - 7208332						
70	3 cylinder	USA	0A996142 - 0C221999	31640T 4	Alum.	818298T 1	Alum.	N/A	
		BEL	9506481 and up						
75	4 cylinder	USA	6432901 and up	31640T 4	Alum.	818298T 1	Alum.	N/A	
	4 cylinder	BEL	9393856 and up						
	4 cylinder	CAN	7208573 and up						
75	4 cylinder	USA	6432901 and up	31640Q03	Magn.	818298T 3	Magn.	N/A	
		BEL	9393856 and up						
		CAN	7208573 and up						
75	3 cylinder	USA	0A996142 - 0T979999	31640T 4	Alum.	818298T 1	Alum.	826134T	Alum.
		BEL	9483121 - 9793576						
75	3 cylinder	USA	0A996142 - 0T979999	31640Q03	Magn.	818298T 3	Magn.	826134T 3	Magn.
		BEL	9483121 - 9793576						
75	3 cylinder	USA	0T980000 and up	31640T07	EDP	818298T 1	Alum.	826134T	Alum.
		BEL	9793577 and up						
75	3 cylinder	USA	0T980000 and up	31640Q03	Magn.	818298T 3	Magn.	826134T 3	Magn.
		BEL	9793577 and up						
75	3 cylinder, Optimax 1.5L	USA	0T980000 and up	31640T07	EDP	818298T 1	Alum.	826134T	Alum.
75	3 cylinder, Optimax 1.5L	USA	0T980000 and up	31640Q03	Magn.	818298T 3	Magn.	826134T 3	Magn.
80 (80, 800)	4 cylinder	USA	2559001 - 6432900	31640T 4	Alum.	N/A		N/A	
80 (80, 800)	4 cylinder	USA	2559001 - 6432900	31640Q03	Magn.	N/A		N/A	
80 (80, 800)	4 cylinder	USA	4831999 - 6432900	31640T 4	Alum.	N/A		N/A	
	4 cylinder	AUS	8050200 and up						
	4 cylinder	BEL	9177626 - 9393855						
	4 cylinder	CAN	7110998 - 7208572						
80 (80, 800)	4 cylinder	USA	4831999 - 6432900	31640Q03	Magn.	N/A		N/A	
		AUS	8050200 and up						
		BEL	9177626 - 9393855						
		CAN	7110998 - 7208572						
80	3 cylinder	USA	0A996142 - 0C221999	31640T 4	Alum.	818298T 1	Alum.	N/A	
		BEL	9483121 and up						
80	3 cylinder	USA	0A996142 - 0C221999	31640Q03	Magn.	818298T 3	Magn.	N/A	
		BEL	9483121 and up						
85 (850)	4 cylinder	USA	3493913 - 4831998	31640T 4	Alum.	N/A		N/A	
		AUS	8005440 - 8050199						
		BEL	9011604 - 9177625						
		CAN	7010108 - 7110997						
85 (850)	4 cylinder	USA	3493913 - 4831998	31640Q03	Magn.	N/A		N/A	
		AUS	8005440 - 8050199						
		BEL	9011604 - 9177625						
		CAN	7010108 - 7110997						
90 (900)	6 cylinder	USA	1766824 - 1869775	31640T 4	Alum.	N/A		N/A	
90 (900)		USA	1766824 - 1869775	31640Q03	Magn.	N/A		N/A	

Model	Model Notes		Serial # Range	Anodic Trim Tab/ Plate	Mat.	Anodic P/T Plate	Mat.	Side Mounted Anodes	Mat.
90 (90, 900)	6 cylinder	USA	4845301 - 6436122	31640T 4	Alum.	N/A		N/A	
		AUS	8060545 and up						
		CAN	7111698 and up						
90 (90, 900)	6 cylinder	USA	4845301 - 6436122	31640Q03	Magn.	N/A		N/A	
		AUS	8060545 and up						
		CAN	7111698 and up						
90	6 cylinder	USA	6436123 - 0A996141	31640T 4	Alum.	818298T 1	Alum.	N/A	
		CAN	7208848 and up						
90	6 cylinder	USA	6436123 - 0A996141	31640Q03	Magn.	818298T 3	Magn.	N/A	
		CAN	7208848 and up						
90	3 cylinder	USA	0A996142 - 0D283221	31640T 4	Alum.	818298T 1	Alum.	N/A	
		BEL	9483121 - 9793576						
90	3 cylinder	USA	0A996142 - 0D283221	31640Q03	Magn.	818298T 3	Magn.	N/A	
		BEL	9483121 - 9793576						
90	3 cylinder	USA	0D283222 and up	31640T 4	Alum.	818298T 1	Alum.	826134T	Alum.
		BEL	9793577 and up						
90	3 cylinder	USA	0D283222 and up	31640Q03	Magn.	818298T 3	Magn.	826134T 3	Magn.
		BEL	9793577 and up						
90	3 cylinder	USA	0D283222 and up	31640T07	EDP	818298T 1	Alum.	826134T	Alum.
		BEL	9793577 and up						
90 Optimax	3 cylinder, 1.5L	USA	0T801000 and up	31640T07	EDP	818298T 1	Alum.	826134T	Alum.
90 Optimax		USA	0T801000 and up	31640Q03	Magn.	818298T 3	Magn.	826134T 3	Magn.
95 (950)	6 cylinder	USA	1869776 - 2318585	31640T 4	Alum.	N/A		N/A	
100 (1000)		USA	1768404 - 2318585	31640T 4	Alum.	N/A		N/A	
100 (1000)		USA	1768404 - 2318585	31640Q03	Magn.	N/A		N/A	
100 (1000SS/1000BP)		USA	2318586 - 2413843	31640T 4	Alum.	N/A		N/A	
100 (1000SS/1000BP)		USA	2318586 - 2413843	31640Q03	Magn.	N/A		N/A	
1000SS		USA	2484633 - 2836018	31640T 4	Alum.	N/A		N/A	
1000SS		USA	2484633 - 2836018	31640Q03	Magn.	N/A		N/A	
100	3 cylinder	USA	0B209468 - 0D283221	31640T 4	Alum.	818298T 1	Alum.	N/A	
		BEL	9793577 - 9793576						
100	3 cylinder	USA	0B209468 - 0D283221	31640Q03	Magn.	818298T 3	Magn.	N/A	
		BEL	9793577 - 9793576						
100	3 cylinder	USA	0D283222 and up	31640T 4	Alum.	818298T 1	Alum.	826134T	Alum.
		BEL	9793577 and up						
100	3 cylinder	USA	0D283222 and up	31640Q03	Magn.	818298T 3	Magn.	826134T 3	Magn.
		BEL	9793577 and up						
100	3 cylinder	USA	0D283222 and up	31640T07	EDP	818298T 1	Alum.	826134T	Alum.
		BEL	9793577 and up						
110 (1100)		USA	1870204 - 2314955	31640T 4	Alum.	N/A		N/A	
110 (1100)		USA	1870204 - 2314955	31640Q03	Magn.	N/A		N/A	
115 (115, 1150)	6 cylinder	USA	2836019 - 6435122	31640T 4	Alum.	N/A		N/A	
		AUS	8008665 and up						
		CAN	7010763 and up						
115 (115, 1150)	6 cylinder	USA	2836019 - 6435122	31640Q03	Magn.	N/A		N/A	
		AUS	8008665 and up						
		CAN	7010763 - 7208847						
115	6 cylinder	USA	6436123 and up	31640T 4	Alum.	818298T 1	Alum.	N/A	
		CAN	7208848 and up						
115	6 cylinder	USA	6436123 and up	31640Q03	Magn.	818298T 3	Magn.	N/A	
		CAN	7208848 and up						

OUTBOARD

Model	Model Notes		Serial # Range	Anodic Trim Tab/ Plate	Mat.	Anodic P/T Plate	Mat.	Side Mounted Anodes	Mat.
115	4 cylinder	USA	0C100000 - 0D283221	31640T 4	Alum.	818298T 1	Alum.	N/A	
		BEL	9559771 - 9793576						
115	4 cylinder	USA	0C100000 - 0D283221	31640Q03	Magn.	818298T 3	Magn.	N/A	
		BEL	9559771 - 9793576						
115	3 cylinder	USA	0D283222 and up	31640T 4	Alum.	818298T 1	Alum.	826134T	Alum.
		BEL	9793577 and up						
115	3 cylinder	USA	0D283222 and up	31640Q03	Magn.	818298T 3	Magn.	826134T 3	Magn.
		BEL	9793577 and up						
115	3 cylinder	USA	0D283222 and up	31640T07	EDP	818298T 1	Alum.	826134T	Alum.
		BEL	9793577 and up						
115 Optimax	3 cylinder, 1.5L	USA	0T801000 and up	31640T07	EDP	818298T 1	Alum.	826134T	Alum.
115 Optimax		USA	0T801000 and up	31640Q03	Magn.	818298T 3	Magn.	826134T 3	Magn.
V-115	6 cylinder, DFI	USA	0G960500 - 0T178499	31640T07	EDP	818298T 1	Alum.	826134T	Alum.
125 (1250)	6 cylinder	USA	2314956 - 3293233	31640T 4	Alum.	N/A		N/A	
125 (1250)		USA	2314956 - 3293233	31640Q03	Magn.	N/A		N/A	
125	3 cylinder	USA	0D283222 and up	31640T 4	Alum.	818298T 1	Alum.	826134T	Alum.
		BEL	9793577 and up						
125	3 cylinder	USA	0D283222 and up	31640Q03	Magn.	818298T 3	Magn.	826134T 3	Magn.
		BEL	9793577 and up						
125	3 cylinder	USA	0D283222 and up	31640T07	EDP	818298T 1	Alum.	826134T	Alum.
		BEL	9793577 and up						
140 (140, 1400)	6 cylinder	USA	3293234 and up	31640T 4	Alum.	N/A		N/A	
		AUS	8052650 and up						
		CAN	7112773 and up						
140 (140, 1400)	6 cylinder	USA	3293234 and up	31640Q03	Magn.	N/A		N/A	
		AUS	8052650 and up						
		CAN	7112773 and up						
150 (1500)	6 cylinder	USA	3502806 - 4865677	31640T 4	Alum.	N/A		N/A	
		AUS	8005615 - 8052649						
		CAN	7010533 - 7112772						
150 (1500)	6 cylinder	USA	3502806 - 4865677	31640Q03	Magn.	N/A		N/A	
		AUS	8005615 - 8052649						
		CAN	7010533 - 7112772						
V-135/150/175	Carb-EFI-DFI	USA	0A904646 - 0D081999	31640T 4	Alum.	818298T 1	Alum.	N/A	
V-135/150/175	Carb-EFI-DFI	USA	0A904646 - 0D081999	31640Q03	Magn.	818298T 3	Magn.	N/A	
V-135/150/XR6/175	Carb-EFI-DFI	USA	0D082000 and up	31640T 4	Alum.	818298T 1	Alum.	826134T	Alum.
V-135/150/XR6/175	Carb-EFI-DFI	USA	0D082000 and up	31640Q03	Magn.	818298T 3	Magn.	826134T 3	Magn.
V-135/150/XR6/175	Carb-EFI-DFI	USA	0D082000 and up	31640T07	EDP	818298T 1	Alum.	826134T	Alum.
V-135/150/XR6/175	Carb-EFI-DFI w/ flat anode	USA	0D082000 and up	76214Q 5	Alum.	818298T 1	Alum.	826134T	Alum.
V-135/150/XR6/175	Carb-EFI-DFI w/ flat anode	USA	0D082000 and up	76214A 6	Magn.	818298T 3	Magn.	826134T 3	Magn.
V-150 XR-2		USA	4868998 - 6616990	31640T 4	Alum.	89949A 1	Alum.	N/A	
V-150 XR-2		USA	4868998 - 6616990	31640Q03	Magn.	89949A 1	Alum.	N/A	
V-150 XR-2		USA	6616991 - 0A904646	31640T 4	Alum.	818298T 1	Alum.	N/A	
V-150 XR-2		USA	6616991 - 0A904646	31640Q03	Magn.	818298T 3	Magn.	N/A	
V-150 XR-4	Bottom inserted screw	USA	0B242885 - 0D081999	15300	Zinc	818298T 1	Alum.	N/A	
V-150 XR-4	Top inserted screw	USA	0B242885 - 0D081999	31640T 4	Alum.	818298T 1	Alum.	N/A	
V-200	Carb	USA	5464486 - 6055032	31640T 4	Alum.	89949A 1	Alum.	N/A	
V-200	Carb	USA	5464486 - 6055032	31640Q03	Magn.	89949A 1	Alum.	N/A	
V-200 (2.4/2.5L)	Carb & EFI	USA	5624878 - 0D081999	31640T 4	Alum.	818298T 1	Alum.	N/A	
V-200 (2.4/2.5L)	Carb & EFI	USA	5624878 - 0D081999	31640Q03	Magn.	818298T 3	Magn.	N/A	
V-200 (2.4/2.5L)	Carb & EFI	USA	0D082000 and up	31640T 4	Alum.	818298T 1	Alum.	826134T	Alum.
V-200 (2.4/2.5L)	Carb & EFI	USA	0D082000 and up	31640Q03	Magn.	818298T 3	Magn.	826134T 3	Magn.
V-200 (2.4/2.5L)	Carb & EFI	USA	0D082000 and up	31640T07	EDP	818298T 1	Alum.	826134T	Alum.
V-200 (2.4/2.5L)	Carb-EFI w/ flat anode	USA	0D082000 and up	76214Q 5	Alum.	818298T 1	Alum.	826134T	Alum.

Model	Model Notes		Serial # Range	Anodic Trim Tab/ Plate	Mat.	Anodic P/T Plate	Mat.	Side Mounted Anodes	Mat.
V-200 (2.4/2.5L)	Carb-EFI w/ flat anode	USA	0D082000 and up	76214A 6	Magn.	818298T 3	Magn.	826134T 3	Magn.
V-200 (3.0L)	EFI-DFI-DTS w/ flate anode	USA	0G386496 and up	76214Q 5	Alum.	818298T 1	Alum.	826134T	Alum.
V-200 (3.0L)	EFI-DFI-DTS w/ flate anode	USA	0G386496 and up	76214A 6	Magn.	818298T 3	Magn.	826134T 3	Magn.
V-220 Laser		USA	0B117316 and up	31640T 4	Alum.	818298T 1	Alum.	N/A	
V-220 Laser		USA	0B117316 and up	31640Q03	Magn.	818298T 3	Magn.	N/A	
V-225 (2.4L)		USA	5628028 - 6073191	31640T 4	Alum.	818298T 1	Alum.	N/A	
V-225 (2.4L)		USA	5628028 - 6073191	31640Q03	Magn.	818298T 3	Magn.	N/A	
V-225 (3.0L)	Carb, C-2 Casting w/ trim tab	USA	0D280813 - 0G437999	822777Q 1	Alum.	818298T 1	Alum.	826134T	Alum.
V-225 (3.0L)	Carb, C-2 Casting w/ trim tab	USA	0D280813 - 0G437999	N.L.A.	EDP	818298T 3	Magn.	826134T 3	Magn.
V-225 (3.0L)	Carb, C-2 Casting w/ flat anode	USA	0D280813 - 0G437999	76214Q 5	Alum.	818298T 1	Alum.	826134T	Alum.
V-225 (3.0L)	Carb, C-2 Casting w/ flat anode	USA	0D280813 - 0G437999	76214A 6	Magn.	818298T 3	Magn.	826134T 3	Magn.
V-225 (3.0L)	Carb, C-3 Casting w/ flat anode	USA	0G438000 and up	76214Q 5	Alum.	818298T 1	Alum.	826134T	Alum.
V-225 (3.0L)	Carb, C-3 Casting w/ flat anode	USA	0G438000 and up	76214A 6	Magn.	818298T 3	Magn.	826134T 3	Magn.
V-225/250 (3.0L)	EFI-DFI-DTS w/ flat anode	USA	0G129222 and up	76214Q 5	Alum.	818298T 1	Alum.	826134T	Alum.
V-225/250 (3.0L)	EFI-DFI-DTS w/ flat anode	USA	0G129222 and up	76214A 6	Magn.	818298T 3	Magn.	826134T 3	Magn.
V-250/275	Carb	USA	0C101891 and up	803833T	EDP	89949A 1	Alum.	N/A	
V-3.4 Litre		USA	5611648 and up	N.L.A.		89949A 1	Alum.	N/A	

Early Mariner Outboard Anodes

HP	Model	X	Serial # Range	Anodic Trim Tab/ Plate	Mat.	Anodic P/T Plate	Mat.	Side Mounted Anodes	Mat.	Cyl. Block Anode	Mat.	Cyl. Block Anode	Mat.	Clamp Brkt. Anode	Mat.	Exh. Tube Anode	Mat.
2	2A (646)		All - All	N/A		N/A		N/A		N/A		N/A		N/A		N/A	
2	2B (6A1)		6A1-142377 and up	N.L.A.	Zinc	N/A		N/A		N/A		N/A		N/A		N/A	
3.5	3.5 (642)		All - All	N.L.A.	Zinc	N/A		N/A		N/A		N/A		N/A		N/A	
4	4A (6E0)	M-		N.L.A.	Zinc	N/A		N/A		N/A		N/A		N/A		N/A	
4	4A (6E0)	ML-		N.L.A.	Zinc	N/A		N/A		N/A		N/A		N/A		N/A	
4	4A (6E0)	M-	6E0-055886 - 114252	N.L.A.	Zinc	N/A		18852M	Alum.	N/A		N/A		N/A		N/A	
4	4A (6E0)	ML-	6E0-321427 - 338165	N.L.A.	Zinc	N/A		18852M	Alum.	N/A		N/A		N/A		N/A	
4	4A (6E0)	M-	6E0-114253 and up	N.L.A.	Zinc	N/A		N/A		N/A		N/A		N/A		N/A	
4	4A (6E0)	ML-	6E0-338166 and up	N.L.A.	Zinc	N/A		N/A		N/A		N/A		N/A		N/A	
5	5A (661)		All - All	N.L.A.	Zinc	N/A		N/A		N/A		N/A		N/A		N/A	
5	5C (6E3)	M-		N.L.A.	Zinc	N/A		N/A		N/A		N/A		N/A		N/A	
5	5C (6E3)	ML-		N.L.A.	Zinc	N/A		N/A		N/A		N/A		N/A		N/A	
5	5C (6E3)	M-	6E3-136244 - 162952	N.L.A.	Zinc	N/A		18852M	Alum.	N/A		N/A		N/A		N/A	
5	5C (6E3)	ML-	6E3-420839 - 435350	N.L.A.	Zinc	N/A		18852M	Alum.	N/A		N/A		N/A		N/A	
5	5C (6E3)	M-	6E3-162953 and up	N.L.A.	Zinc	N/A		N/A		N/A		N/A		N/A		N/A	
5	5C (6E3)	ML-	6E3-435351 and up	N.L.A.	Zinc	N/A		N/A		N/A		N/A		N/A		N/A	
6	6C (6H8)		All - All	14205M	Alum.	N/A		N/A		N/A		N/A		N/A		N/A	
6	6D (6H6)		All - All	14205M	Alum.	N/A		N/A		N/A		N/A		N/A		N/A	
8	8A (655)		All - All	N.L.A.	Zinc	N/A		N/A		N/A		N/A		N/A		N/A	
8	8B (677)		All - All	N.L.A.	Zinc	N/A		N/A		N/A		N/A		N/A		N/A	
8	8C (6G1)		All - All	14205M	Alum.	N/A		N/A		N/A		N/A		N/A		N/A	
9.9	9.9C (682)		All - All	811990M	Alum.	N/A		N/A		N.L.A.	Zinc	N/A		N/A		N/A	
15	15A (651)		All - All	N.L.A.	Zinc	N/A		N/A		N.L.A.	Zinc	N/A		N/A		N/A	
15	15C (684)		All - All	811990M	Alum.	N/A		N/A		N.L.A.	Zinc	N/A		N/A		N/A	
15	15C (684)	M-	684-062459 and up	811990M	Alum.	N/A		18852M	Alum.	N.L.A.	Zinc	N/A		N/A		N/A	
15	15C (684)	ML-	684-336234 and up	811990M	Alum.	N/A		18852M	Alum.	N.L.A.	Zinc	N/A		N/A		N/A	
15	15C (684)	E-	684-252704 and up	811990M	Alum.	N/A		18852M	Alum.	N.L.A.	Zinc	N/A		N/A		N/A	
15	15C (684)	EL-	684-553589 and up	811990M	Alum.	N/A		18852M	Alum.	N.L.A.	Zinc	N/A		N/A		N/A	
20	20A (653)		All - All	N.L.A.	Zinc	N/A		N/A		N.L.A.	Zinc	N/A		N/A		N/A	
20	20A (653)	M-	653-12171 and up	N.L.A.	Zinc	N/A		N.L.A.	Zinc	N/A		N/A		N/A		N/A	
20	20A (653)	ML-	653-39091 and up	N.L.A.	Zinc	N/A		N.L.A.	Zinc	N/A		N/A		N/A		N/A	

OUTBOARD

HP	Model	X	Serial # Range	Anodic Trim Tab/ Plate	Mat.	Anodic P/T Plate	Mat.	Side Mounted Anodes	Mat.	Cyl. Block Anode	Mat.	Cyl. Block Anode	Mat.	Clamp Brkt. Anode	Mat.	Exh. Tube Anode	Mat.
20	20C (6A9)		All - All	82795T	Zinc	N/A		N/A		84732M	Zinc	N/A		N/A		N/A	
25	25A (648)		All - All	N.L.A.	Zinc	N/A		N/A		N.L.A.	Zinc	N/A		N/A		N/A	
25	25A (648)	M-	648-24991 and up	N.L.A.	Zinc	N/A		N.L.A.	Zinc	N/A		N/A		N/A		N/A	
25	25A (648)	ML-	648-64046 and up	N.L.A.	Zinc	N/A		N.L.A.	Zinc	N/A		N/A		N/A		N/A	
25	25A (648)	E-	648-27056 and up	N.L.A.	Zinc	N/A		N.L.A.	Zinc	N/A		N/A		N/A		N/A	
25	25A (648)	EL-	648-56526 and up	N.L.A.	Zinc	N/A		N.L.A.	Zinc	N/A		N/A		N/A		N/A	
25	25C (695)		All - All	82795T	Zinc	N/A		N/A		84732M	Zinc	N/A		N/A		N/A	
28	28 (664)		All - All	82795T	Zinc	N/A		N/A		84732M	Zinc	N/A		N/A		N/A	
30	30A (689)		All - All	82795T	Zinc	N/A		N/A		84732M	Zinc	N/A		N/A		N/A	
40	40A (676)		All - All	83394M	Alum.	N/A		N/A		N.L.A.	Zinc	N/A		N/A		N/A	
40	40A (676)	M-	676-A007736 and up	83394M	Alum.	N/A		N/A		N.L.A.	Zinc	83394M	Alum.	N/A		N/A	
40	40A (676)	ML-	676-A311371 and up	83394M	Alum.	N/A		N/A		N.L.A.	Zinc	83394M	Alum.	N/A		N/A	
40	40A (676)	E-	676-A100416 and up	83394M	Alum.	N/A		N/A		N.L.A.	Zinc	83394M	Alum.	N/A		N/A	
40	40A (676)	EL-	676-A403471 and up	83394M	Alum.	N/A		N/A		N.L.A.	Zinc	83394M	Alum.	N/A		N/A	
40	40B (676)		All - All	83859T	Zinc	N/A		N/A		N.L.A.	Zinc	N/A		N/A		N/A	
40	40B (676)	M-	676-B002781 and up	83859T	Zinc	N/A		N/A		N.L.A.	Zinc	83394M	Alum.	N/A		N/A	
40	40B (676)	ML-	676-B302426 and up	83859T	Zinc	N/A		N/A		N.L.A.	Zinc	83394M	Alum.	N/A		N/A	
40	40B (676)	E-	676-B102786 and up	83859T	Zinc	N/A		N/A		N.L.A.	Zinc	83394M	Alum.	N/A		N/A	
40	40B (676)	EL-	676-B405251 and up	83859T	Zinc	N/A		N/A		N.L.A.	Zinc	83394M	Alum.	N/A		N/A	
40	40C (6E9)		All and up	83859T	Zinc	N/A		N/A		N.L.A.	Zinc	83394M	Alum.	N/A		N/A	
40	40C (6E9)	M-	6E9-007666 - 008625	83859T	Zinc	N/A		N/A		N.L.A.	Zinc	83394M	Alum.	8M0073429	Zinc	N/A	
40	40C (6E9)	ML-	6E9-309344 - 311889	83859T	Zinc	N/A		N/A		N.L.A.	Zinc	83394M	Alum.	8M0073429	Zinc	N/A	
40	40C (6E9)	E-	6E9-105014 - 105664	83859T	Zinc	N/A		N/A		N.L.A.	Zinc	83394M	Alum.	8M0073429	Zinc	N/A	
40	40C (6E9)	EL-	6E9-423163 - 428357	83859T	Zinc	N/A		N/A		N.L.A.	Zinc	83394M	Alum.	8M0073429	Zinc	N/A	
40	40C (6E9)	ET-	6E9-500101 - 502265	83859T	Zinc	N/A		N/A		N.L.A.	Zinc	83394M	Alum.	8M0073429	Zinc	N/A	
40	40C (6E9)	M-	6E9-008625 and up	83859T	Zinc	N/A		N/A		N.L.A.	Zinc	83394M	Alum.	N.L.A.	Alum.	N/A	
40	40C (6E9)	ML-	6E9-105663 and up	83859T	Zinc	N/A		N/A		N.L.A.	Zinc	83394M	Alum.	N.L.A.	Alum.	N/A	
40	40C (6E9)	E-	6E9-428357 and up	83859T	Zinc	N/A		N/A		N.L.A.	Zinc	83394M	Alum.	N.L.A.	Alum.	N/A	
40	40C (6E9)	EL-	6E9-502265 and up	83859T	Zinc	N/A		N/A		N.L.A.	Zinc	83394M	Alum.	N.L.A.	Alum.	N/A	
40	40C (6E9)	ET-	6E9-502266 and up	83859T	Zinc	N/A		N/A		N.L.A.	Zinc	83394M	Alum.	N.L.A.	Alum.	N/A	
48	48 (670)	M-		83859T	Zinc	N/A		N/A		N.L.A.	Zinc	N/A		N/A		N.L.A.	Zinc
48	48 (670)	ML-		83859T	Zinc	N/A		N/A		N.L.A.	Zinc	N/A		N/A		N.L.A.	Zinc
48	48 (670)	M-	670-001011 and up	83859T	Zinc	N/A		N/A		N.L.A.	Zinc	N/A		N/A		N.L.A.	Alum.
48	48 (670)	ML-	670-305781 and up	83859T	Zinc	N/A		N/A		N.L.A.	Zinc	N/A		N/A		N.L.A.	Alum.
48	W-48 (670)		All - All	83859T	Zinc	N/A		N/A		N.L.A.	Zinc	N/A		N/A		N.L.A.	Alum.
48	W-48 (670)	M-	670-007191 and up	83859T	Zinc	N/A		N/A		N.L.A.	Zinc	N/A		N.L.A.	Alum.	N.L.A.	Alum.
48	W-48 (670)	ML-	670-334241 and up	83859T	Zinc	N/A		N/A		N.L.A.	Zinc	N/A		N.L.A.	Alum.	N.L.A.	Alum.
55	55 (663)		All - All	83859T	Zinc	N/A		N/A		N.L.A.	Zinc	N/A		N/A		N.L.A.	Zinc
55	55 (663)	E-	663-004041 and up	83859T	Zinc	N/A		N/A		N.L.A.	Zinc	N/A		N.L.A.	Alum.	N.L.A.	Alum.
55	55 (663)	EL-	663-315279 and up	83859T	Zinc	N/A		N/A		N.L.A.	Zinc	N/A		N.L.A.	Alum.	N.L.A.	Alum.
55	W-55 (663)		All - All	83859T	Zinc	N/A		N/A		N.L.A.	Zinc	N/A		N.L.A.	Alum.	N.L.A.	Alum.
60	60 (2 cyl.) (675)	E-		83859T	Zinc	N/A		N/A		N.L.A.	Zinc	N/A		N/A		N.L.A.	Zinc
60	60 (2 cyl.) (675)	EL-		83859T	Zinc	N/A		N/A		N.L.A.	Zinc	N/A		N/A		N.L.A.	Zinc
60	60 (2 cyl.) (675)	E-	675-000781 and up	83859T	Zinc	N/A		N/A		N.L.A.	Zinc	N/A		N/A		N.L.A.	Alum.
60	60 (2 cyl.) (675)	EL-	675-302051 and up	83859T	Zinc	N/A		N/A		N.L.A.	Zinc	N/A		N/A		N.L.A.	Alum.
60	60 (2 cyl.) (6F0)		All - All	83859T	Zinc	N/A		N/A		N.L.A.	Zinc	N/A		N.L.A.	Alum.	N/A	

Force OB Anodes

HP	Model	Year Range	Serial # Range	Trim Tab/ Exhaust Snout	Mat.	Anodic P/T Plate	Mat.	Prop Spool Anode	Mat.	Gear Hsg. Anode	Mat.	Side Mounted Anode	Mat.	Side Mounted Anode (Opt.)	Mat.	Anodic Prop Nut Anode	Prop Nut Anode Only
4	4 (All)	1984 - 1987		N/A		N/A		N/A		N/A		N/A		N/A		N/A	N/A
5	5	1988 - 1998		N/A		N/A		N/A		N/A		N/A		N/A		N/A	N/A
7.5	7.5 (All)	1985		N/A		N/A		N/A		N/A		N/A		N/A		N/A	N/A
9.9	9.9	1988 - 1997		N/A		N/A		N/A		N/A		N/A		N.L.A.	Zinc	N/A	N/A
9.9	9.9	1998	0E288000 - 0E344999	42121Q02	Alum.	N/A		N/A		N/A		N/A		N.L.A.	Zinc	N/A	N/A
15	15	1988 - 1997		N/A		N/A		N/A		N/A		N/A		N.L.A.	Zinc	N/A	N/A
15	15	1998	0E288000 - 0E344999	42121Q02	Alum.	N/A		N/A		N/A		N/A		N.L.A.	Zinc	N/A	N/A
25	25 A	1989		N.L.A.	Zinc	N/A		N/A		N/A		N/A		N.L.A.	Zinc	N/A	N/A
25	25 B	1989		N.L.A.	Zinc	N/A		N/A		N/A		N/A		N.L.A.	Zinc	N/A	N/A
25	25	1995 - 1998	0E090400 - 0E344999	98432Q 6	Zinc	N/A		N/A		N/A		N/A		N/A		N/A	N/A
35	35 A	1986 - 1991		N.L.A.	Zinc	N/A		N/A		N/A		N/A		N.L.A.	Zinc	N/A	N/A
35	35 B	1987 - 1991		N.L.A.	Zinc	N/A		N/A		N/A		N/A		N.L.A.	Zinc	N/A	N/A
35	35 C	1989 - 1990		N.L.A.	Zinc	N/A		N/A		N/A		N/A		N.L.A.	Zinc	N/A	N/A
40	40 C	1992		N.L.A.	Zinc	N/A		N/A		N/A		N/A		N.L.A.	Zinc	N/A	N/A
40	40	1992 - 1994	0E000001 - 0E093699	N.L.A.	Zinc	N/A		N/A		N/A		N/A		N.L.A.	Zinc	N/A	N/A
40	40	1995 - 2016	0E093700 and up	822157T 2	Zinc	825271 1	Alum.	N/A		N/A		N/A		N/A		N.L.A.	N.L.A.
50	50 A	1984 - 1992		N.L.A.	Zinc	N/A		N/A		N/A		N/A		N.L.A.	Zinc	N/A	N/A
50	50 B	1987 - 1991		N.L.A.	Zinc	N/A		N/A		N/A		N/A		N.L.A.	Zinc	N/A	N/A
50	50 C	1987 - 1992		N.L.A.	Zinc	N/A		N/A		N/A		N/A		N.L.A.	Zinc	N/A	N/A
50	50 D	1988 - 1990		N.L.A.	Zinc	N/A		N/A		N/A		N/A		N.L.A.	Zinc	N/A	N/A
50	50 Z	1991		N.L.A.	Zinc	N/A		N/A		N/A		N/A		N.L.A.	Zinc	N/A	N/A
50	50	1992 - 1994	0E000001 - 0E093699	N.L.A.	Zinc	N/A		N/A		N/A		N/A		N.L.A.	Zinc	N/A	N/A
50	50	1995 - 2016	0E093700 and up	822157T 2	Zinc	825271 1	Alum.	N/A		N/A		N/A		N/A		N.L.A.	N.L.A.
60	60 A	1985		N.L.A.	Zinc	N/A		N/A		N/A		N/A		N.L.A.	Zinc	N/A	N/A
60	60 C	1985		N.L.A.	Zinc	N/A		N/A		N/A		N/A		N.L.A.	Zinc	N/A	N/A
70	70 A	1992		17264T 2	Zinc	N/A		N/A		N/A		N/A		N/A		N.L.A.	N.L.A.
70	70 B	1991		17264T 2	Zinc	N/A		N/A		N/A		N/A		N/A		N.L.A.	N.L.A.
70	70 C	1991 - 1992		17264T 2	Zinc	N/A		N/A		N/A		N/A		N/A		N.L.A.	N.L.A.
70	70	1992 - 1995	0E000001 - 0E138599	17264T 2	Zinc	N/A		N/A		N/A		N/A		N/A		N.L.A.	N.L.A.
75	75	1996 - 1998	0E138600 - 0E344999	17264T 2	Zinc	N/A		N/A		N/A		N/A		N/A		N.L.A.	N.L.A.
75	75	1999	0E345000 and up	31640T07	EDP	818298Q 1	Alum.	N/A		N/A		826134Q	Alum.	N/A		809664A 1	809662T
85	85 A	1984 - 1989		N/A		N/A		N.L.A.	Zinc	N/A		N/A		N.L.A.	Zinc	N/A	N/A
85	85 B	1986 - 1988		N/A		N/A		N.L.A.	Zinc	N/A		N/A		N.L.A.	Zinc	N/A	N/A
85	85 C	1986 - 1989		N/A		N/A		N.L.A.	Zinc	N/A		N/A		N.L.A.	Zinc	N/A	N/A
85	85 D	1989		N/A		N/A		N.L.A.	Zinc	N/A		N/A		N.L.A.	Zinc	N/A	N/A
85	85 E	1989		N/A		N/A		N.L.A.	Zinc	N/A		N/A		N.L.A.	Zinc	N/A	N/A
85	85 F	1989		N/A		N/A		N.L.A.	Zinc	N/A		N/A		N.L.A.	Zinc	N/A	N/A
85	85 G	1989		N/A		N/A		N.L.A.	Zinc	N/A		N/A		N.L.A.	Zinc	N/A	N/A
85	85 H	1989		N/A		N/A		N.L.A.	Zinc	N/A		N/A		N.L.A.	Zinc	N/A	N/A
85	85 L	1983 - 1986		N/A		N/A		N.L.A.	Zinc	N/A		N/A		N.L.A.	Zinc	N/A	N/A
85	85 M	1986		N/A		N/A		N.L.A.	Zinc	N/A		N/A		N.L.A.	Zinc	N/A	N/A
85	85 N	1986		N/A		N/A		N.L.A.	Zinc	N/A		N/A		N.L.A.	Zinc	N/A	N/A
85	85 A LD	1989		N/A		N/A		N.L.A.	Zinc	N/A		N/A		N.L.A.	Zinc	N/A	N/A
85	85 B LD	1989		N/A		N/A		N.L.A.	Zinc	N/A		N/A		N.L.A.	Zinc	N/A	N/A
85	85 C LD	1989		N/A		N/A		N.L.A.	Zinc	N/A		N/A		N.L.A.	Zinc	N/A	N/A

OUTBOARD

HP	Model	Year Range	Serial # Range	Trim Tab/ Exhaust Snout	Mat.	Anodic P/T Plate	Mat.	Prop Spool Anode	Mat.	Gear Hsg. Anode	Mat.	Side Mounted Anode	Mat.	Side Mounted Anode (Opt.)	Mat.	Anodic Prop Nut Anode	Prop Nut Anode Only
90	90 A	1990		N/A		N/A		N.L.A.	Zinc	N/A		N/A		N.L.A.	Zinc	809664A 1	809662T
90	90 A	1991		N/A		N/A		N/A		N.L.A.	Zinc	N/A		N.L.A.	Zinc	809664A 1	809662T
90	90 A	1992		N/A		N/A		N/A		N/A		819232	Alum.	N.L.A.	Zinc	809664A 1	809662T
90	90 B	1990		N/A		N/A		N.L.A.	Zinc	N/A		N/A		N.L.A.	Zinc	809664A 1	809662T
90	90 C	1990 - 1991		N/A		N/A		N/A		N.L.A.	Zinc	N/A		N.L.A.	Zinc	809664A 1	809662T
90	90 C	1992		N/A		N/A		N/A		N/A		819232	Alum.	N.L.A.	Zinc	809664A 1	809662T
90	90 D	1991		N/A		N/A		N/A		N.L.A.	Zinc	N/A		N.L.A.	Zinc	809664A 1	809662T
90	90 E	1991		N/A		N/A		N/A		N/A		819232	Alum.	N.L.A.	Zinc	809664A 1	809662T
90	90 H	1991		N/A		N/A		N/A		N/A		819232	Alum.	N.L.A.	Zinc	809664A 1	809662T
90	90	1992 - 1994	0E000001 - 0E093699	N/A		N/A		N/A		N/A		819232	Alum.	N.L.A.	Zinc	809664A 1	809662T
90	90	1995 - 1999	0E093700 and up	31640T07	EDP	818298Q 1	Alum.	N/A		N/A		826134Q	Alum.	N/A		809664A 1	809662T
90	90 A LD	1990		N/A		N/A		N.L.A.	Zinc	N/A		N/A		N.L.A.	Zinc	N/A	N/A
90	90 B LD	1991		N/A		N/A		N/A		N.L.A.	Zinc	N/A		N.L.A.	Zinc	809664A 1	809662T
90	90 C LD	1990		N/A		N/A		N/A		N.L.A.	Zinc	N/A		N.L.A.	Zinc	809664A 1	809662T
90	90 D LD	1991		N/A		N/A		N/A		N.L.A.	Zinc	N/A		N.L.A.	Zinc	809664A 1	809662T
120	120 A	1990		N/A		N/A		N.L.A.	Zinc	N/A		N/A		N.L.A.	Zinc	809664A 1	809662T
120	120 A	1991		N/A		N/A		N/A		N.L.A.	Zinc	N/A		N.L.A.	Zinc	809664A 1	809662T
120	120 A	1992		N/A		N/A		N/A		N/A		819232	Alum.	N.L.A.	Zinc	809664A 1	809662T
120	120 B	1990		N/A		N/A		N.L.A.	Zinc	N/A		N/A		N.L.A.	Zinc	809664A 1	809662T
120	120 C	1990 - 1991		N/A		N/A		N/A		N.L.A.	Zinc	N/A		N.L.A.	Zinc	809664A 1	809662T
120	120 C	1992		N/A		N/A		N/A		N/A		819232	Alum.	N.L.A.	Zinc	809664A 1	809662T
120	120 D	1991		N/A		N/A		N/A		N.L.A.	Zinc	N/A		N.L.A.	Zinc	809664A 1	809662T
120	120 H	1991		N/A		N/A		N/A		N/A		819232	Alum.	N.L.A.	Zinc	809664A 1	809662T
120	120	1992 - 1994	0E000001 - 0E093699	N/A		N/A		N/A		N/A		819232	Alum.	N.L.A.	Zinc	809664A 1	809662T
120	120	1995 - 1999	0E093700 and up	31640T07	EDP	818298Q 1	Alum.	N/A		N/A		826134Q	Alum.	N/A		809664A 1	809662T
120	120 A LD	1990		N/A		N/A		N.L.A.	Zinc	N/A		N/A		N.L.A.	Zinc	809664A 1	809662T
120	120 B LD	1990 - 1992		N/A		N/A		N/A		N.L.A.	Zinc	N/A		N.L.A.	Zinc	809664A 1	809662T
120	120 C LD	1990		N/A		N/A		N/A		N.L.A.	Zinc	N/A		N.L.A.	Zinc	809664A 1	809662T
120	120 D LD	1991		N/A		N/A		N/A		N.L.A.	Zinc	N/A		N.L.A.	Zinc	809664A 1	809662T
125	125 A	1983 - 1989		N/A		N/A		N.L.A.	Zinc	N/A		N/A		N.L.A.	Zinc	N/A	N/A
125	125 B	1986 - 1989		N/A		N/A		N.L.A.	Zinc	N/A		N/A		N.L.A.	Zinc	N/A	N/A
125	125 C	1988 - 1989		N/A		N/A		N.L.A.	Zinc	N/A		N/A		N.L.A.	Zinc	N/A	N/A
125	125 D	1989		N/A		N/A		N.L.A.	Zinc	N/A		N/A		N.L.A.	Zinc	N/A	N/A
125	125 E	1989		N/A		N/A		N.L.A.	Zinc	N/A		N/A		N.L.A.	Zinc	N/A	N/A
125	125 A LD	1989		N/A		N/A		N.L.A.	Zinc	N/A		N/A		N.L.A.	Zinc	N/A	N/A
125	125 B LD	1989		N/A		N/A		N.L.A.	Zinc	N/A		N/A		N.L.A.	Zinc	N/A	N/A
150	150 A	1989 - 1990		N/A		N/A		N.L.A.	Zinc	N/A		N/A		N.L.A.	Zinc	809664A 1	809662T
150	150 A	1991		N/A		N/A		N/A		N.L.A.	Zinc	N/A		N.L.A.	Zinc	809664A 1	809662T
150	150 A	1992		N/A		N/A		N/A		N/A		819232	Alum.	N.L.A.	Zinc	809664A 1	809662T
150	150 B	1990		N/A		N/A		N.L.A.	Zinc	N/A		N/A		N.L.A.	Zinc	809664A 1	809662T
150	150 B	1991		N/A		N/A		N/A		N.L.A.	Zinc	N/A		N.L.A.	Zinc	809664A 1	809662T
150	150 C	1990		N/A		N/A		N.L.A.	Zinc	N/A		N/A		N.L.A.	Zinc	809664A 1	809662T
150	150 C	1992		N/A		N/A		N/A		N/A		819232	Alum.	N.L.A.	Zinc	809664A 1	809662T
150	150 D	1990		N/A		N/A		N.L.A.	Zinc	N/A		N/A		N.L.A.	Zinc	809664A 1	809662T
150	150 E	1991		N/A		N/A		N/A		N.L.A.	Zinc	N/A		N.L.A.	Zinc	809664A 1	809662T
150	150 F	1991		N/A		N/A		N/A		N.L.A.	Zinc	N/A		N.L.A.	Zinc	809664A 1	809662T
150	150 H	1991		N/A		N/A		N/A		N.L.A.	Zinc	N/A		N.L.A.	Zinc	809664A 1	809662T
150	150 J	1991		N/A		N/A		N/A		N.L.A.	Zinc	N/A		N.L.A.	Zinc	809664A 1	809662T
150	150	1992 - 1994	0E000001 - 0E093699	N/A		N/A		N/A		N/A		819232	Alum.	N.L.A.	Zinc	809664A 1	809662T

Trolling Motor Anodes

Model	Year Range	Serial # Range	Shaft Anode	Mat.	Bearing Cap Anode	Mat.
Thruster (All Models)	1976 - 1990	4208828 - 0C925339	N.L.A.	Zinc	N/A	
Thruster T33	1991 - 1992	0C925340 - 0C959999	N.L.A.	Zinc	N.L.A.	Zinc
Thruster R33/RX33	1991 - 1992	0C925340 - 0C925339	N.L.A.	Zinc	N.L.A.	Zinc
Thruster T45/D45	1991 - 1992	0C925340 - 0C925339	N.L.A.	Zinc	N.L.A.	Zinc
Thruster R45/RL45/RX45	1991 - 1992	0C925340 - 0C925339	N.L.A.	Zinc	N.L.A.	Zinc
Thruster T28 (export only)	1992	0C946590 - 0C925339	N.L.A.	Zinc	M879341T	Zinc
Thruster T24	1993 - 1995	0C960000 and up	N.L.A.	Zinc	N.L.A.	Zinc
Thruster T28	1993 - 1995	0C960000 and up	N.L.A.	Zinc	N.L.A.	Zinc
Thruster T33	1993 - 1995	0C960000 and up	N.L.A.	Zinc	N.L.A.	Zinc
Thruster T45	1993 - 1995	0C960000 and up	N.L.A.	Zinc	N.L.A.	Zinc
Thruster R25/RL25	1993 - 1995	0C960000 and up	N/A		N.L.A.	Zinc
Thruster R30/RL30	1993 - 1995	0C960000 and up	N/A		N.L.A.	Zinc
Thruster RL35/RX35	1993 - 1995	0C960000 and up	N/A		N.L.A.	Zinc
Thruster RL45	1993 - 1995	0C960000 and up	N/A		N.L.A.	Zinc
Thruster DL50	1993 - 1995	0C960000 and up	N.L.A.	Zinc	N.L.A.	Zinc
Thruster RL50/RX50	1993 - 1995	0C960000 and up	N/A		N.L.A.	Zinc
Stalker (All Models)	1983 - 1990	5194909 - 0C925339	N.L.A.	Zinc	N/A	

MERCRUISER

SPARK PLUGS - MERCRUISER

SPARK PLUG



33-863622001
AC, 41-983 (Platinum)
Fits MCM 496 Mag & HO and MIE 8.1L & HO
Priced individually, sold @ multiples of 8

33-862029
AC, MR43LTS
Priced individually, sold @ multiples of 8

33-898264001
AC, MR43T
Priced individually, sold @ multiples of 8

33-813425
NGK, AR6FS
Priced individually, sold @ multiples of 10

33-8M0095454
NGK, BPR5EFS
Fits MCM 4.5L & 6.2L Mercury engines
Priced individually, sold @ multiples of 10
NEW

33-810883
NGK, BPR6ES
Priced individually, sold @ multiples of 10

33-816336Q
NGK, BPR6EFS
Priced individually, sold @ multiples of 10

33- 97389
NGK, BPR6FS
Priced individually, sold @ multiples of 10

33-813471 1
NGK, BR6ES
Priced individually, sold @ multiples of 4

33-813415
NGK, B8S
Priced individually, sold @ multiples of 10

33-8M2018369
NGK, ITR4A15 (Iridium)
Fits 2001 & newer MCM/MIE 4.3L, 5.0L, 5.7L & 6.2L MPI engines with ECM 555.
Note: Replaces AC# 41-101, 41-932 & 41-993
Priced individually, sold @ multiples of 4

33-813421 4
NGK, R5673-8
Priced individually, sold @ multiples of 4

33-8M0046007
NGK, TR51X (Iridium)
Replaces the 33-803990 NGK# BPR5EFVX
Priced individually, sold @ multiples of 4

SPARK PLUG - SHOP PACK



33-8M0058932
NGK ITR4A15
Shop Pack
Priced individually, sold @ multiples of 25

33- 59571B
NGK, BR6FS, check and set gap per owner's manual or the emissions control information decal if present.
25 spark plugs in one shop package.
Priced individually, sold @ multiples of 25

SPARK PLUG CHART - MERCRUISER

MCM Spark Plug Chart

Model	CID/ #Cyl	Type of Ignition	Year Range	Serial # Range	Spark Plug	Spark Plug Gap
100 Vazer	98/ L4	Delco - HEI	2007 - 2009	1A035000 and up	33-896329818	.035
110	153/ L4	Delco	1963 - 1966	1537370 - 2044033	33-813471 1	.035
120	153/ L4	Delco	1964 - 1974	1666601 - 3825578	33-813471 1	.035
120	153/ L4	Delco	1974 - 1986	3825579 - 0B531853	33-898264001	.035
2.5L	153/ L4	Delco	1987 - 1989	0B531854 - 0C853255	33-898264001	.035
140	181/ L4	Delco	1968 - 1974	2508261 - 3826282	33-813471 1	.035
140	181/ L4	Delco	1974 - 1986	3826283 - 0B450800	33-898264001	.035
3.0L	181/ L4	Delco	1987 - 1989	0B450801 - 0C856558	33-898264001	.035
3.0L	181/ L4	Prestolite	1990 - 1991	0C856559 - 0D504541	33-898264001	.035
3.0L	181/ L4	Delco Digital	1990 - 1991	0C856559 - 0D504541	33-898264001	.035

Model	CID/ #Cyl	Type of Ignition	Year Range	Serial # Range	Spark Plug	Spark Plug Gap
3.0L	181/ L4	EST	1991 - 1994	0D504542 - 0F603999	33-816336Q	.035
3.0L	181/ L4	EST	1998	0L010042 - 0L340999	33-816336Q	.035
3.0L	181/ L4	EST	1999 - 2016	0L341000 and up	33-862029	.045
3.0L MPI	181/ L4	EST	2008 - 2016	1A072812 and up	33-862029	.045
3.0LX	181/ L4	Prestolite	1990 - 1991	0C856559 - 0D504541	33-898264001	.035
3.0LX	181/ L4	Delco Digital	1990 - 1991	0C856559 - 0D504541	33-816336Q	.035
3.0LX	181/ L4	EST	1991 - 1997	0D504542 - 0K999999	33-816336Q	.035
165	224/ L4	Delco	1987	0B434940 - 0B77451	33- 97389	.035
170	224/ L4	Delco	1985 - 1986	6916779 - 0B434940	33- 97389	.035
180	224/ L4	Delco & Prestolite	1987	0B436391 - 0B775248	33- 97389	.035
190	224/ L4	Delco	1985 - 1986	6916779 - 0B436390	33- 97389	.035
3.7L	224/ L4	Delco	1988 - 1989	0B774252 and up	33- 97389	.035
3.7LX	224/ L4	Delco & Prestolite	1988 - 1989	0B775249 and up	33- 97389	.035
470	224/ L4	Delco	1976 - 1984	4208730 - 6916778	33- 97389	.035
485	224/ L4	Delco	1980 - 1982	5685394 - 6218036	33- 97389	.035
488	224/ L4	Delco	1983 - 1984	6170297 - 6916778	33- 97389	.035
140	194/ L6	Delco	1963	1538930 - 1725960	33-813471 1	.035
150	230/ L6	Delco	1964 - 1966	1666495 - 2048046	33-813471 1	.035
160	250/ L6	Delco	1967 - 1969	2048022 - 2770031	33-813471 1	.035
165	250/ L6	Delco	1970	2770032 - 2771483	33-813471 1	.035
165	250/ L6	Delco	1971 - 1981	2771484 - 5813433	33-898264001	.035
200	292/ L6	Delco	1969	2453769 - 2712072	33-813471 1	.035
185 (4 bbl.)	229/ V-6	Prestolite	1983 - 1984	6330183 - 6919655	33-898264001	.035
175	262/ V-6	Thunderbolt IV	1987	0B527955 - 0B773242	33-898264001	.035
185 (2 bbl.)	262/ V-6	Thunderbolt IV	1985 - 1987	6919656 - 0B527954	33-898264001	.035
205	262/ V-6	Thunderbolt IV	1985 - 1987	0A331455 - 0B775129	33-898264001	.035
262 Mag.(TBI)(Gen+)	262/ V-6	Delco - HEI	1996 - 1997	0F803800 - 0K999999	33-862029	.045
4.3L	262/ V-6	Thunderbolt IV	1988 - 1993	0B773243 - 0F000877	33-898264001	.035
4.3L	262/ V-6	Thunderbolt IV	1993 - 1996	0F000878 - 0F802999	33-898264001	.040
4.3L (Gen +)	262/ V-6	Thunderbolt V	1998 - 2004	0L010044 - 0W300012	33-862029	.045
4.3L TKS	262/ V-6	Thunderbolt V	2004 - 2016	0W300013 and up	33-862029	.060
4.3L EFI (Gen+)(TBI)	262/ V-6	Delco & Mercury - HEI	1998 - 2001	0L012009 - 0M299999	33-862029	.045
4.3L MPI	262/ V-6	Delco - HEI	2002 - 2016	0M300000 and up	33-8M2018369	.060
4.3L MPI EC	262/ V-6	Delco - HEI	2011 - 2016	1A637496 and up	33-8M2018369	.060
4.3LH (Gen +)	262/ V-6	Thunderbolt IV	1998 - 2002	0L010044 - 0M614999	33-862029	.045
4.3LX	262/ V-6	Thunderbolt IV	1988 - 1993	0B775130 - 0F001219	33-898264001	.035
4.3LX	262/ V-6	Thunderbolt IV	1993 - 1996	0F001220 - 0F802999	33-898264001	.040
4.3LX (Gen +)	262/ V-6	Thunderbolt IV	1996 - 1997	0F803000 - 0K999999	33-862029	.045
4.3LXH (Gen +)	262/ V-6	Thunderbolt IV	1996 - 1997	0F803000 - 0K999999	33-862029	.045
4.5L MPI	275/ V6	Mercury	2014 - 2016	2A441953 and up	33-8M0095454	.051
215 MCM & MIE (Ford)	302/ V-8	Autolite	1970 - 1972	2781153 - 3563181	N.L.A.	.030
215 MCM & MIE (Ford)	302/ V-8	Mallory	1970 - 1972	2781153 - 3563181	33-813425	.030
225 MCM & MIE (Ford)	302/ V-8	All	1973 - 1974	3385721 - 4166999	33-813425	.030
888 (Ford)	302/ V-8	All	1971 - 1977	3108723 - 4887829	33-813425	.030
190 (8 cyl.)	283/ V-8	Delco	1963 - 1964	1564539 - 1730903	N.L.A.	.035
198 MIE	305/ V-8	Mallory	1977	4776402 - 4931099	33-898264001	.035
200	305/ V-8	Thunderbolt IV	1985 - 1987	6899058 - 0B774444	33-898264001	.035
228	305/ V-8	Mallory	1977 - 1982	4765100 - 6218461	33-898264001	.035

Model	CID/ #Cyl	Type of Ignition	Year Range	Serial # Range	Spark Plug	Spark Plug Gap
228	305/ V-8	Thunderbolt IV	1983 - 1984	6218462 - 6899268	33-898264001	.035
228 MIE	305/ V-8	Mallory	1977 - 1980	4765100 - 5907057	33-898264001	.035
230	305/ V-8	Thunderbolt IV	1985 - 1987	6899269 - 0B773739	33-898264001	.035
230 MIE (LH)	305/ V-8	Thunderbolt IV	1981 - 1987	5907058 - 0B788151	33-898264001	.035
230 MIE (RH)	305/ V-8	Thunderbolt IV	1981 - 1987	5907058 - 0B788151	33-898264001	.035
5.0L	305/ V-8	Thunderbolt IV	1988 - 1995	0B774445 - 0F600999	33-898264001	.035
5.0L (Gen +)	305/ V-8	Thunderbolt V	1998 - 2004	0L015751 - 0W300009	33-862029	.045
5.0L TKS	305/ V-8	Thunderbolt V	2004 - 2016	0W300010 and up	33-862029	.060
5.0L EFI (Gen +)	305/ V-8	Delco & Mercury - HEI	1998 - 2001	0L012052 - 0M299999	33-862029	.045
5.0L MIE (LH)	305/ V-8	Thunderbolt IV	1988	0B788152 - 0C396832	33-898264001	.035
5.0L MIE (RH)	305/ V-8	Thunderbolt IV	1988	0B788152 - 0C396832	33-898264001	.035
5.0L MPI	305/ V-8	Delco - HEI	2002 - 2016	0M300000 and up	33-8M2018369	.060
5.0L MPI EC	305/ V-8	Delco - HEI	2008 - 2016	1A300000 and up	33-8M2018369	.060
5.0LX	305/ V-8	Thunderbolt IV	1988 - 1995	0B773740 - 0F600999	33-898264001	.035
898	305/ V-8	Mallory	1977 - 1982	4762210 - 6218461	33-898264001	.035
898	305/ V-8	Thunderbolt IV	1983 - 1984	6218462 - 6899057	33-898264001	.035
225 (GM)	327/ V-8	Delco	1963 - 1969	1539620 - 2694014	N.L.A.	.035
225 MIE (GM)	327/ V-8	Thunderbolt	1968	2278647 - 2694014	33-813415	N/A
250 MCM & MIE	327/ V-8	Thunderbolt	1968 - 1969	2314301 - 2639854	33-813415	N/A
250	350/ V-8	Mallory	1977	4768000 - 4908849	33-898264001	.035
255 MCM & MIE (GM)	350/ V-8	Mallory & Mercury	1975 - 1976	3258728 - 4767999	33-898264001	.035
260	350/ V-8	Mallory	1978 - 1982	4908850 - 6218461	33-898264001	.035
260	350/ V-8	Thunderbolt IV	1982 - 1987	6218462 - 0B773304	33-898264001	.035
260 MIE (LH)	350/ V-8	Thunderbolt IV	1981 - 1987	5907058 - 0B788151	33-898264001	.035
260 MIE (RH)	350/ V-8	Thunderbolt IV	1981 - 1987	5907058 - 0B788151	33-898264001	.035
270 MCM & MIE	350/ V-8	Thunderbolt	1969 - 1972	2851074 - 3385720	33-813415	N/A
280 TRS	350/ V-8	Mercury	1975	4176250 - 4499390	33-898264001	.035
280 TRS	350/ V-8	Mallory	1976	4499391 - 4770199	33-898264001	.035
300	350/ V-8	Thunderbolt IV	1985 - 1986	6668677 - 0B430367	33-898264001	.035
320 EFI	350/ V-8	Thunderbolt IV	1987 - 1989	0A543604 - 0C622418	33-898264001	.035
350 Mag. Alpha	350/ V-8	Thunderbolt IV & V	1986 - 1997	0A635178 - 0K999999	33-898264001	.035
350 Mag. Alpha EFI (Gen+)	350/ V-8	Delco - HEI	1996	0K001509 - 0K999999	33-862029	.045
350 Mag. Bravo MPI	350/ V-8	Delco - HEI	1995	0F415189 - 0F601999	33-898264001	.035
350 Mag. Bravo MPI (Gen+)	350/ V-8	Delco - HEI	1996 - 1997	0F602000 - 0K999999	33-862029	.045
350 Mag. EFI Ski	350/ V-8	Delco - HEI	1994 - 1997	0F215561 - 0K999999	33-862029	.045
350 Mag. MPI (Gen+)	350/ V-8	Delco - HEI	1998	0L010019 - 0L325952	33-862029	.045
350 Mag. MPI (Gen+)	350/ V-8	Mercury -HEI	1999 - 2001	0L325953 - 0M299999	33-862029	.045
350 Mag. MPI	350/ V-8	Delco - HEI	2002 - 2016	0M300000 and up	33-8M2018369	.060
350 Mag. MPI EC	350/ V-8	Delco - HEI	2008 - 2016	1A300000 and up	33-8M2018369	.060
350 Mag. MPI Horizon	350/ V-8	Delco - HEI	2002 - 2007	0M300000 and up	33-8M2018369	.060
350 Mag. MPI Horizon MIE	350/ V-8	Mercury -HEI	1999 - 2001	0L304700 - 0M299999	33-8M0046007	.045
350 Mag. MPI Horizon MIE	350/ V-8	Delco - HEI	2002 - 2007	0M300000 - 1A089999	33-8M2018369	.060
350 Mag. MPI MIE (Gen+)	350/ V-8	Delco - HEI	1998 - 2016	0L002008 - 0L302199	33-862029	.045
350 Mag. MPI MIE (Gen+)	350/ V-8	Mercury -HEI	1998 - 2001	0L302200 - 0M299999	33-862029	.045
350 Mag. MPI MIE	350/ V-8	Delco -HEI	2002 - 2007	0M300000 - 1A089999	33-8M2018369	.060
350 Mag. MPI Ski	350/ V-8	Delco - HEI	1995 - 1996	0F350583 - 0F799999	33-898264001	.035
350 Mag. MPI Ski (Gen+)	350/ V-8	Delco - HEI	1998	0L002600 - 0L304599	33-862029	.045
350 Mag. MPI Ski (Gen+)	350/ V-8	Mercury -HEI	1999 - 2001	0L304600 - 0M299999	33-862029	.045
350 Mag. MPI Ski	350/ V-8	Delco -HEI	2002 - 2016	0M300000 and up	33-8M2018369	.060
350 Mag. Ski	350/ V-8	Thunderbolt IV & V	1991 - 1997	0D505450 - 0K999999	33-898264001	.035
5.7L	350/ V-8	Thunderbolt IV & V	1988 - 1997	0B773305 - 0K999999	33-898264001	.035
5.7L (Gen +)	350/ V-8	Thunderbolt V	1998 - 2004	0L010037 - 0W300754	33-862029	.045

Model	CID/ #Cyl	Type of Ignition	Year Range	Serial # Range	Spark Plug	Spark Plug Gap
5.7L TKS	350/ V-8	Thunderbolt V	2004 - 2016	0W300755 and up	33-862029	.060
5.7L EFI	350/ V-8	Delco - HEI	1995 - 1997	0F225560 - 0K999999	33-898264001	.035
5.7L EFI (Gen +)	350/ V-8	Delco & Mercury - HEI	1998 - 2001	0L010035 - 0M299999	33-862029	.045
5.7L EFI MIE (Gen+)	350/ V-8	Delco - HEI	1997	0K040300 - 0K999999	33-862029	.045
5.7L MIE (LH)	350/ V-8	Thunderbolt IV	1988 - 1993	0B788152 - 0F024999	33-898264001	.035
5.7L MIE (RH)	350/ V-8	Thunderbolt IV	1988 - 1993	0B788152 - 0F024999	33-898264001	.035
5.7L MIE	350/ V-8	Thunderbolt IV	1993 - 1995	0F025000 - 0K999999	33-898264001	.035
5.7L MIE (Gen+)	350/ V-8	Thunderbolt V	1998 - 2004	0L002003 - 0W090899	33-862029	.045
5.7L MIE TKS	350/ V-8	Thunderbolt V	2004 - 2016	0W090900 and up	33-862029	.060
5.7L MPI Horizon MIE	350/ V-8	Delco -HEI	2008 - 2016	1A090000 and up	33-8M2018369	.060
5.7L MPI MIE	350/ V-8	Delco -HEI	2008 - 2016	1A090000 and up	33-8M2018369	.060
5.7L MPI MIE EC	350/ V-8	Delco -HEI	2008 - 2016	1A090000 and up	33-8M2018369	.060
5.7L MPI Tow Sports	350/ V-8	Delco -HEI	2008 - 2016	1A090000 and up	33-8M2018369	.060
5.7L MPI Tow Sports EC	350/ V-8	Delco -HEI	2008 - 2016	1A090000 and up	33-8M2018369	.060
5.7L Ski	350/ V-8	Prestolite & Mallory	1985 - 1995	0A338553 - 0F775199	33-898264001	.035
5.7L Ski	350/ V-8	Thunderbolt IV & V	1987 - 1997	0B514627 - 0K999999	33-898264001	.035
5.7L Ski	350/ V-8	Thunderbolt V	1998 - 2004	0L002005 - 0W090899	33-862029	.045
5.7L Ski TKS	350/ V-8	Thunderbolt V	2004 - 2016	0W090900 and up	33-862029	.060
5.7LX	350/ V-8	Thunderbolt V	1996 - 1997	0F601000 - 0K999999	33-898264001	.035
5.7LX Bravo EFI (Gen +)	350/ V-8	Delco - HEI	1996 - 1997	0F800300 - 0K999999	33-862029	.045
5.7LX EFI	350/ V-8	Delco - HEI	1996 - 1997	0F752400 - 0K999999	33-898264001	.035
Black Scorpion Ski (Gen+)	350/ V-8	Delco - HEI	1996 - 2002	0F800000 - 0M391599	33-862029	.045
Black Scorpion Ski (Gen+)	350/ V-8	Delco - HEI	2003 - 2007	0M391600 - 0W698432	33-8M2018369	.060
Scorpion 350	350/ V-8	Delco - HEI	2008 - 2016	0W698433 and up	33-8M2018369	.060
Scorpion 350 EC	350/ V-8	Delco - HEI	2008 - 2016	0W698433 and up	33-8M2018369	.060
233 MCM & MIE (Ford)	351/ V-8	Mercury & Prestolite	1975 - 1977	4173000 - 4902304	33-813425	.030
255 MIE & MCM (Ford)	351/ V-8	Mallory & Mercury	1973 - 1980	3258728 - 5907057	33-813425	.030
377 Mag	377/ V-8	Delco -HEI	2008 - 2016	1A300000 and up	33-8M2018369	.060
377 Mag EC	377/ V-8	Delco -HEI	2008 - 2016	1A300000 and up	33-8M2018369	.060
377 Scorpion MCM	377/ V-8	Delco - HEI	1999 - 2005	0L416146 - 0M907201	33-862029	.045
377 Scorpion Ski	377/ V-8	Delco - HEI	1997 - 1998	0K000656 - 0L600314	33-862029	.045
6.2L MPI (Mercury)	377/ V-8	Mercury	2015 - 2016	2A456613 and up	33-8M0095454	.051
MX 6.2L MPI	377/ V-8	Mercury -HEI	2000 - 2001	0L680003 - 0M299999	33-862029	.045
MX 6.2L MPI	377/ V-8	Delco -HEI	2002 - 2007	0M300000 - 1A299999	33-8M2018369	.060
MX 6.2L MPI Horizon	377/ V-8	Delco -HEI	2002 - 2007	0M300000 and up	33-8M2018369	.060
MX 6.2L MPI Horizon MIE	377/ V-8	Delco -HEI	2002 - 2016	0M300000 and up	33-8M2018369	.060
MX 6.2L MPI MIE	377/ V-8	Mercury -HEI	1999 - 2001	0L670000 - 0M299999	33-862029	.045
MX 6.2L MPI MIE	377/ V-8	Delco -HEI	2002 - 2007	0M300000 and up	33-8M2018369	.060
MX 6.2L MPI MIE EC	377/ V-8	Delco -HEI	2008 - 2016	1A090000 and up	33-8M2018369	.060
MX 6.2L MPI Ski	377/ V-8	Delco -HEI	2002 - 2007	0M317000 and up	33-8M2018369	.060
MX 6.2L Blk Scorpion Ski	377/ V-8	Delco - HEI	2001 - 2002	0L670015 - 0M391599	33-862029	.045
MX 6.2L Blk Scorpion Ski	377/ V-8	Delco - HEI	2003 - 2007	0M391750 - 0W698432	33-8M2018369	.060
Scorpion 377	377/ V-8	Delco - HEI	2008 - 2016	0W698433 and up	33-8M2018369	.060
Scorpion 377 HO EC	377/ V-8	Delco - HEI	2009 - 2016	1A091488 and up	33-8M2018369	.060
325 MCM & MIE	427/ V-8	Thunderbolt	1969 - 1974	2278747 and up	33-813421 4	.035
330 MCM & MIE	454/ V-8	Mallory	1977 - 1981	4623115 - 6083144	33-898264001	.035
330 MCM & MIE	454/ V-8	Thunderbolt	1977 - 1981	4623115 - 6083144	33-813421 4	.035
330	454/ V-8	Thunderbolt IV	1982 - 1987	6083145 - 0B816540	33-898264001	.035
340 MIE	454/ V-8	Thunderbolt IV	1981 - 1987	5889914 - 0B788365	33-898264001	.035
350 MIE	454/ V-8	Thunderbolt	1974 - 1976	3780450 - 4623109	33-813421 4	.035
370 TRS	454/ V-8	Mallory	1978 - 1985	4179554 - 6721527	33-813421 4	.035

Model	CID/ #Cyl	Type of Ignition	Year Range	Serial # Range	Spark Plug	Spark Plug Gap
370 TRS	454/ V-8	Holley	1978 - 1985	4883520 - 6721527	33-898264001	.035
370 TRS	454/ V-8	Thunderbolt IV	1985 - 1987	6721528 - 0B714586	33-898264001	.035
400 TRS	454/ V-8	Mallory	1980 - 1986	5668232 - 0B457644	33-813421 4	.035
400 TRS	454/ V-8	Holley	1980 - 1986	5668232 - 0B457644	33-898264001	.035
420	454/ V-8	Thunderbolt IV	1987 - 1989	0A398941 - 0B622418	33-898264001	.035
425	454/ V-8	Thunderbolt IV	1990 - 1993	0B622419 - 0D937011	33-898264001	.035
440 TRS	454/ V-8	Mallory	1983 - 1986	6181070 - 0B485220	33-813421 4	.035
440 TRS	454/ V-8	Holley	1983 - 1986	6181070 - 0B485220	33-898264001	.035
450	454/ V-8	Thunderbolt IV	1995 - 1996	0F347100 - 0F347277	33-898264001	.035
454 Mag. Alpha	454/ V-8	Thunderbolt IV	1986 - 1988	0A631894 - 0B785148	33-898264001	.035
454 Mag. Bravo	454/ V-8	Thunderbolt IV	1988 - 1997	0B721206 - 0K999999	33-898264001	.035
454 Mag. EFI	454/ V-8	Delco - HEI	1994 - 1996	0F115700 - 0F802349	33-898264001	.035
454 Mag. EFI Ski	454/ V-8	Delco - HEI	1995 - 1996	0F215800 - 0F820099	33-898264001	.035
454 Mag. MPI	454/ V-8	Delco - HEI	1996 - 2001	0F802350 - 0M024999	33-898264001	.040
454 Mag. MPI Horizon MIE	454/ V-8	Delco - HEI	1998 - 2001	0L002200 - 0L674000	33-898264001	.040
454 Mag. MPI Ski	454/ V-8	Delco - HEI	1996 - 1997	0F820100 - 0K999999	33-898264001	.040
525 SC	454/ V-8	Thunderbolt IV	1991 - 1999	0D456000 - 0L415623	33-898264001	.035
7.4L Bravo	454/ V-8	Thunderbolt IV	1988 - 1997	0B771113 - 0K999999	33-898264001	.035
7.4L EFI MIE	454/ V-8	Delco - HEI	1996 - 1997	0F874815 - 0K999999	33-898264001	.035
7.4L MIE	454/ V-8	Thunderbolt IV & V	1981 - 1997	5889914 - 0K999999	33-898264001	.035
7.4L MPI (L29)	454/ V-8	Delco - HEI	1998 - 2001	0L010003 - 0M024330	33-816336Q	.045
7.4L MPI MIE	454/ V-8	Delco - HEI	1995 - 1997	0F563052 - 0K999999	33-898264001	.035
7.4L MPI MIE (L29)	454/ V-8	Delco - HEI	1998 - 2001	0L002006 - 0L674613	33-816336Q	.045
7.4LX Bravo EFI	454/ V-8	Delco - HEI	1996 - 1997	0F820000 - 0K999999	33-898264001	.035
7.4LX Bravo MPI	454/ V-8	Delco - HEI	1996 - 1997	0F602010 - 0K999999	33-898264001	.035
390	482/ V-8	Thunderbolt	1969 - 1970	2781129 - 2825059	N.L.A.	.035
460 TRS	482/ V-8	Mallory & Holley	1983 - 1986	6180970 - 6181046	33-813421 4	.035
496 Mag & HO	496/ V-8	Delco	2001 - 2016	0M025000 and up	33-863622001	.060
496 Mag & HO EC	496/ V-8	Delco	2008 - 2016	1A066166 and up	33-863622001	.060
8.1S & HO MIE	496/ V-8	Delco	2001 - 2016	0M026000 and up	33-863622001	.060
8.1S & HO MIE EC	496/ V-8	Delco	2008 - 2016	0W697154 and up	33-863622001	.060
500	502/ V-8	Thunderbolt IV	1994 - 1998	0F213293 - 0L001772	33-898264001	.035
500 (Gen +)	502/ V-8	Thunderbolt IV	1999	0L414639 - 0L601036	33-898264001	.035
500 EFI	502/ V-8	Delco - HEI	1998 - 2005	0L001477 and up	33-898264001	.035
502 Mag.	502/ V-8	Thunderbolt IV	1990 - 1993	0C878221 - 0F114528	33-898264001	.035
502 Mag. EFI	502/ V-8	Delco - HEI	1993 - 1996	0D840650 - 0F802599	33-898264001	.035
502 Mag. MPI	502/ V-8	Delco - HEI	1996 - 2001	0F802600 - 0M024999	33-898264001	.040
525 EFI	502/ V-8	Mercury - HEI	2003 - 2016	0M900146 and up	33-810883	.035
575 SCi	502/ V-8	Delco - HEI	2000 - 2005	0L306696 - 0M950526	33-813421 4	.040
600 SC	502/ V-8	Thunderbolt IV	1991 - 1993	0D456489 - 0D763875	33-898264001	.035
600 SC	502/ V-8	Thunderbolt IV	1993 - 1996	0D763876 - 0F877642	33-813421 4	.035
8.2L Mag	502/ V-8	Mercury - HEI	2010 - 2016	1A351597 and up	33-810883	.060
8.2L Mag EC	502/ V-8	Mercury - HEI	2010 - 2016	1A350340 and up	33-810883	.006
8.2L MIE	502/ V-8	Thunderbolt IV & V	1990 - 1996	0C878221 - 0F819619	33-898264001	.035
8.2L MIE	502/ V-8	Mercury - HEI	2010 - 2016	1A350802 and up	33-810883	.060
8.2L MIE EC	502/ V-8	Mercury - HEI	2010 - 2016	1A350802 and up	33-810883	.060
8.2L MPI MIE	502/ V-8	Delco - HEI	1996 - 2001	0F819620 - 0L674200	33-898264001	.040
500 Bulldog	540/ V-8	Thunderbolt IV	1990 - 1996	0C577003 - 0F745405	33-898264001	.035
500 Bulldog	540/ V-8	Thunderbolt IV	1997 - 2001	0K000248 - 0M050281	33-898264001	.040
575	540/ V-8	Thunderbolt IV	1986 - 1992	0A677429 - 0D763716	33-813421 4	.035

Model	CID/ #Cyl	Type of Ignition	Year Range	Serial # Range	Spark Plug	Spark Plug Gap
800SC	572/ V-8	Thunderbolt IV	1993 - 1996	0D763836 - 0F877725	33-813421 4	.035
800SC	572/ V-8	Thunderbolt IV	1997 - 2016	0K000223 and up	33-813421 4	.040

CUSTOM ENGINE COVERS

These covers have yellow flamed graphics and are designed to fit over the top of the existing MerCruiser OEM cover.

ENGINE COVER WITH FLAME GRAPHICS



879194T80

Want the hottest engine in the marina? Heat things up with a flame engine cover. You're sure to get everyone's attention at the next owner's rendezvous.

Fits 4.3 MPI, 5.0 MPI, 350 Mag MPI, MX 6.2 MPI built between 2001 and the present

ENGINE COVER WITH FLAME GRAPHICS



879147T94

Want the hottest engine in the marina? Heat things up with a flame engine cover. You're sure to get everyone's attention at the next owner's rendezvous.

Fits All Scorpion models built between 1995 and the present.
Note: Scorpion emblem not included.

ENGINE COVER WITH FLAME GRAPHICS



879194T79

Want the hottest engine in the marina? Heat things up with a flame engine cover. You're sure to get everyone's attention at the next owner's rendezvous.

Fits 496 Mag, 496 Mag HO, 8.1S Horizon, 8.1S HO built between 2000 and 2008

BEARING KIT

GIMBAL BEARING KIT



30-879194A00

Perma-Lube Bearing Kit required to retrofit the new XR/XZ drives to older Bravo transom plate assemblies to provide enough clearance for the larger u-joint on the new XR/XZ drives.

Fits Bravo transom assemblies

TILT UP LIMIT SPACER KIT

Limits the tilt (up) range to prevent the drive unit from hitting the swim platform.

TRIM LIMIT SPACER KIT



15768A 3

2 per kit

Fits Alpha One & Gen II (1987 and newer) & Bravo drives.

TRIM IN LIMIT SPACER KITS

Reduces "stern lift" by preventing the drive unit from reaching the last few degrees of full trim under. See MerCruiser Service Bulletin # 94-1 for additional details.

TRIM LIMIT SPACER KIT



23-806445A 1

Internal Cylinder Kit, For negative trim (in) limit of .750 in.(19 mm) to 1.00 in.(25 mm).

Fits Bravo drives (s/n 0F214599 and below)

TRAILERING CLIPS

To support drive in the tilt up position while trailering.

TRAILERING CLIP



817019T 2

Fits MC-I, R, MR, Alpha, Bravo & Vazer drives.
Priced & packaged in qty. of 2

Mercury Branded, Clamshell Package Point of Sale Packaged.

817019Q 2

Fits MC-I, R, MR, Alpha, Bravo & Vazer drives.
Priced & packaged in qty. of 2

Quicksilver Branded, Clamshell Package Point of Sale Packaged.

GEAR LUBE MONITOR KITS

GEAR LUBE MONITOR KIT



69622A 7

Mounts on inner transom and connects to the vent hole in the upper driveshaft housing.

Fits MC-I, R, MR, & Alpha One drives (s/n 0D490999 and below).

GEAR LUBE MONITOR KIT



806193A49

Mounts on inner transom, connecting internally to the upper driveshaft housing. Includes low gear lube warning sensor that connects to the engine audio warning system. Warning feature requires that the Audio Warning System is installed on the engine.

Fits Alpha One Gen II (s/n 0D491000 and above).

GEAR LUBE RESERVOIR KIT



865585A02

1 quart reservoir kit with float switch.
Designed to replace the smaller rectangular reservoir for added gear lube capacity.

Fits Bravo drives running under excessive loads in a heavy use environment.

GEAR LUBE RESERVOIR RELOCATION KIT



806054A 1

Reservoir Relocation Kit. Used to relocate the "square" reservoir bottle from the engine to the transom. This kit should be used when the installation of any other accessory kit would interfere with the reservoir at its factory installed location.

Fits Alpha & Bravo models (1994 and newer)

DUAL STATION SENDERS

Replaces factory installed sender on engine. For use with dual station instrumentation.

ENGINE OIL PRESSURE SENDER



37293T

Fits MCM/MIE gasoline engines

ENGINE WATER TEMPERATURE SENDER



49734

For dual station installations, used for temperature gauge

Fits MCM/MIE engines

ENGINE OIL PRESSURE SENDER



87-805268

For dual station installations

Fits 1994 and newer MCM/MIE Diesel engines

SERPENTINE BELT KITS

The second MCM V-6 or V-8 engine used in a dual engine boat can have the power steering pump removed by using one of these belt kits. If the pump is not removed, the plastic power steering hose coupler must be changed to a brass one. DO NOT RUN the power steering pump continuously with the plastic shipping coupler. Order a Belt Kit or a Brass Coupler.

SERPENTINE BELT & PULLEY KIT



889432A 1

Fits 2002-2003 MCM V-6 & V-8 (305 & 350 cid) Alpha engines with standard cooling that the power steering pump is being removed (s/n 0M343008-0M999999).

SERPENTINE BELT & PULLEY KIT



889433A 1

Fits 2002-2003 MCM V-6 & V-8 (305, 350 & 377 cid) Alpha engines with closed cooling and Bravo engines that the power steering pump is being removed (s/n 0M343008-0M999999).

SERPENTINE BELT KIT



807901A 4

For dual engine applications where power steering pump is being removed.

Fits MCM V-6 & V-8 (305 & 350 cid) Alpha engines with standard cooling. Also fits MCM 4.3L Alpha with closed cooling. See application chart for specific engine models.

807901A 3

For dual engine applications where power steering pump is being removed.

Fits MCM V-6 & V-8 (305 & 350 cid) Bravo engines with standard cooling. Also fits MCM 4.3L Bravo; 5.0L & 5.7L Alpha/Bravo with closed cooling. See application chart for specific engine models.

SERPENTINE BELT

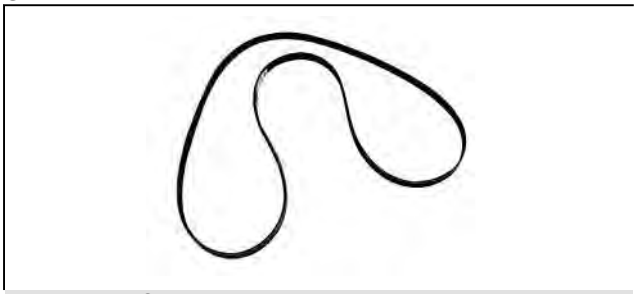

57-865615Q08

2535 mm length

Fits 1999-2002 MCM V-6 & V-8 (305, 350 & 377 cid) Bravo engines with high mounted alternator that the power steering pump is being removed (s/n 0L619000-0M343007).

57-865615Q09

1780 mm length

Fits 1999-2001 MCM V-6 & V-8 (305 & 350 cid) Alpha engines with high mounted alternator (s/n 0L619000-0M320024)

57-865615Q07

2467 mm length

Fits 1998-2001 MCM V-8 (454 & 502 cid) Bravo engines with serpentine belt that the power steering pump is being removed.

57-865615Q02

2285 mm length

Fits 2001-2004 MIE 8.1S engines (s/n 0M025000-0W389999). Also fits 2001-2005 MCM 496 Mag engines (s/n 0M025000-0W309999) that the power steering pump has been removed.

P/S HOSE COUPLER



22-860099001

Required kit when leaving the power steering pump on the second engine in dual engine applications. Connects the power steering hoses together.

Fits all MCM engines with power steering

SERPENTINE BELT KIT CHART

MCM Serpentine Belt Kits

For use on engines with power steering pump removed

Model	Year Range	Serial # Range	Belt Kit	Optional Brass Coupler
MCM V-6 (Gen +) Alpha	1996 - 1999	0F803000 - 0L619083	807901A 4	22-860099001
MCM V-6 (Gen +) Alpha	1999 - 2002	0L619084 - 0M320024	57-865615Q09	22-860099001
MCM V-6 (Gen +) Alpha	2002	0M320025 - 0M343007	57-865615Q09(1)	22-860099001
MCM V-6 (Gen +) Alpha, RWC	2002 - 2003	0M343008 - 0M999999	889432A 1	22-860099001
MCM V-6 (Gen +) Alpha, FWC	2002 - 2003	0M343008 - 0M999999	889433A 1	22-860099001
MCM V-6 (Gen +) Bravo	1996 - 1999	0F803000 - 0L619083	807901A 3	22-860099001
MCM V-6 (Gen +) Bravo	1999 - 2002	0L619084 - 0M320024	57-865615Q08	22-860099001
MCM V-6 (Gen +) Bravo	2002	0M320025 - 0M343007	57-865615Q08(2)	22-860099001
MCM V-6 (Gen +) Bravo	2002 - 2003	0M343008 - 0M999999	889433A 1	22-860099001
MCM V-8 (305 & 350 cid) Alpha	1997 - 1999	0K001506 - 0L618999	807901A 4	22-860099001
MCM V-8 (305 & 350 cid) Alpha	1999 - 2002	0L619000 - 0M320024	57-865615Q09	22-860099001
MCM V-8 (305 & 350 cid) Alpha	2002	0M320025 - 0M343007	57-865615Q09(1)	22-860099001
MCM V-8 (305 & 350 cid) Alpha, RWC	2002 - 2003	0M343008 - 0M999999	889432A 1	22-860099001
MCM V-8 (305 & 350 cid) Alpha, FWC	2002 - 2003	0M343008 - 0M999999	889433A 1	22-860099001
MCM V-8 (305 & 350 cid) Bravo	1998 - 1999	0K001506 - 0L618999	807901A 3	22-860099001
MCM V-8 (305, 350 & 377 cid) Bravo	1999 - 2002	0L619000 - 0M320024	57-865615Q08	22-860099001
MCM V-8 (305, 350 & 377 cid) Bravo	2002	0M320025 - 0M343007	57-865615Q08(2)	22-860099001
MCM V-8 (305, 350 & 377 cid) Bravo	2002 - 2003	0M343008 - 0M999999	889433A 1	22-860099001
MCM V-8 (454 cid)	1998 - 2001	0L010003 - 0M024999	57-865615Q07	22-860099001
MCM V-8 (496 cid)	2001 - 2003	0M025000 - 0W000004	57-865615Q02	22-860099001
MCM V-8 (502 cid)	1998 - 2001	0L017000 - 0M024999	57-865615Q07	22-860099001

(1) 889432A 1 Serpentine Belt Kit: Order this belt kit instead of the one listed if the engine has a 4-1/4 in.(108 mm) diameter grooved idler pulley.

(2) 889433A 1 Serpentine Belt Kit: Order this belt kit instead of the one listed if the engine has a 4-1/4 in.(108 mm) diameter grooved idler pulley.

AIR INTAKE SILENCER KIT

SILENCER KIT - AIR INTAKE



8M0063432

Reduces the throttle intake noise at cruise speed and mid-range RPM.
Not recommended for V-drive installations.
Backfits all MCM/MIE 8.2L engines w/o intake air silencer

AIR INTAKE TUBE KIT

AIR INTAKE TUBE AND FILTER KIT



8M0085794

Increases air flow for better turbo efficiency. Standard equiptment on current Tier 3 engines.
Back fits all MCM/MIE V6 TDI Tier 2 diesel engines with CEZ serial numbers.

HOT WATER HEATER FITTING KITS

Includes the necessary fittings to provide a means of supplying hot water to a remote location.

HOT WATER FITTING KIT



22-806836A 3

Fits 1992 and newer MCM 3.0L/LX (s/n 0D616823 and above)

HOT WATER FITTING KIT



879288A03

Fits 2008 and newer MCM 3.0 MPI Emissions Control engine.

HOT WATER FITTING KIT



22-8M0053764

Fits 2001 and newer MCM V-6 & MCM/MIE V-8 (305, 350 & 377 cid) MPI engines (s/n 0M300000 and up).

HOT WATER FITTING KIT



22-8M0095698

Fits 2001 and newer MCM V-6 & MCM/MIE V-8 (305, 350 & 377 cid) MPI engines (s/n 0M300000 and up). Also fits MCM 4.5 V-6 MPI engines

22-8M0099734

Fits 2001 and newer GM MCM V-6 & MCM/MIE V-8 (305, 350 & 377 cid) MPI engines (s/n 0M300000 and up). Also fits Mercury 4.5 & 6.2L MPI engines (2014 and newer) NEW

HOT WATER FITTING KIT



22- 72932A 3

Fits MCM/MIE V-6 & V-8 (305, 350, 377, 454 & 502 cid) engines with front mounted heat exchanger (s/n 0F490650 and above), except MPI engines s/n 0M300000 and above.

HOT WATER FITTING KIT



22-806837A 1

Fits MCM 496 Mag & MIE 8.1S engines.

HOT WATER FITTING KIT



22-8M0045175

Fits MCM/MIE 8.2

HOT WATER FITTING KIT



22-806837A 2

Fits 1.7 MS & MI 120 diesel.

HOT WATER FITTING KIT



805984A 1

For heater hose with 5/8 in.(16 mm) I.D.
Fits 1997 & older MCM/MIE D2.8L, D3.0L, D3.6L, and D4.2L Diesel models

HOT WATER FITTING KIT



889074A 1

With shut-off valve,
For heater hose with 5/8 in. (16 mm) I.D.
Fits 1998 & newer MCM/MIE 2.0L, 2.8L & 4.2L Diesel models

HOT WATER FITTING KIT



22-8M0094865

Fits MCM/MIE 3.0L V6 TDI Diesel models

HOT WATER HEATER T-FITTING KIT CHART

MCM Hot Water T-fittings

Model	Year Range	Serial # Range	Hot Water Fitting Kit
MCM 4 cyl. (153 & 181 cid)	1983 - 1991	6229718 - 0D616822	N.L.A.
MCM 4 cyl. (181 cid)	1992 - 2004	0D616823 - 0W301999	22-806836A 3
MCM 4 cyl. (181 cid) TKS carb	2005 - 2016	0W302000 and up	(7)
MCM 4 cyl. (181 cid) MPI	2008 - 2016	1A072812 and up	879288A03(8)
MCM V-6 (229 cid)	1983 - 1984	6330183 - 6919655	N.L.A.
MCM V-6 (262 cid)	1985 - 1991	0A331455 - 0D616517	N.L.A.
MCM V-6 (262 cid)	1992 - 1995	0D616518 - 0F490649	N.L.A.(1)
MCM V-6 (262 cid)	1992 - 1995	0D616518 - 0F490649	N.L.A.(2)
MCM V-6 (262 cid) Carb & TBI engines	1995 - 2016	0F490650 and up	22- 72932A 3
MCM V-6 (262 cid) MPI engines	2002 - 2016	0M300000 and up	22-8M0053764
MCM V-6 (262 cid) MPI EC engines	2011 - 2016	1A637496 and up	22-8M0053764
MCM 4.5L V6 MPI	2014 - 2016	2A441953 and up	22-8M0095698
MCM V-8 (305 & 350 cid)	1983 - 1991	6218462 - 0D616638	N.L.A.
MCM V-8 (305 & 350 cid)	1992 - 1995	0D616639 - 0F490649	N.L.A.(1)
MCM V-8 (305 & 350 cid)	1992 - 1995	0D616639 - 0F490649	N.L.A.(2)
MCM V-8 (305, 350 & 377 cid) Carb & TBI engines	1995 - 2016	0F490650 and up	22- 72932A 3
MCM V-8 (305, 350 & 377 cid) MPI engines	1995 - 2001	0F490650 - 0M299999	22- 72932A 3
MCM V-8 (305, 350 & 377 cid) MPI engines	2002 - 2016	0M300000 and up	22-8M0053764
MCM 6.2L (Mercury)	2015 - 2016	2A456613 and up	22-8M0099734
MCM V-8 (454 & 502 cid)	1982 - 1991	6083145 - 0D603117	N.L.A.
MCM V-8 (454 & 502 cid)	1992 - 1995	0D603118 - 0F490649	N.L.A.(1)
MCM V-8 (454 & 502 cid)	1992 - 1995	0D603118 - 0F490649	N.L.A.(2)
MCM V-8 (454 & 502 cid)	1995 - 2016	0F490650 and up	22- 72932A 3
MCM 496 Mag & HO	2000 - 2016	0M025000 and up	22-806837A 1
MCM 8.2 Mag & HO	2010 - 2016	1A350340 and up	22-8M0045175
MIE & SKI V-8	1981 - 1991	5907058 - 0D623999	N.L.A.
MIE & Ski V-8	1992 - 1995	0D624000 - 0F490649	N.L.A.(1)(4)
MIE V-8	1992 - 1995	0D624000 - 0F490649	N.L.A.(2)(3)
MIE V-8	1995 - 1997	0F490650 - 0K999999	22- 72932A 3(3)
MIE V-8	1995 - 1997	0F490650 - 0K999999	N.L.A.(4)
MIE V-8 (Except MIE 8.1S)	1998 - 2001	0L002003 - 0M299999	22- 72932A 3
MIE V-8 MPI (Except MIE 8.1S)	2002 - 2016	0M300000 and up	22-8M0053764
MIE 6.2L MPI (Mercury)	2015 - 2016	2A456613 and up	22-8M0099734
MIE 8.1S Horizon & HO	2000 - 2016	0M025000 and up	22-806837A 1
MIE 8.2 Horizon & HO	2010 - 2016	1A350802 and up	22-8M0045175
MCM/MIE 3.0L V6 TDI	2013 - 2016	All - All	22-8M0094865
MCM/MIE VM Diesel(5)	1989 - 2002	0B993002 and up	805984A 1
MCM/MIE VM Diesel(6)	1989 - 2002	0B993002 and up	N.L.A.
MCM/MIE 2.0L, 2.8L & 4.2L	1998 - 2016	0L667439 and up	889074A 1
MCM/MIE D7.3L	1994 - 1997	0F060000 and up	N.L.A.

Model	Year Range	Serial # Range	Hot Water Fitting Kit
MCM/MIE D7.3L D-Tronic	1997 - 2016	0K095775 and up	N.L.A.

(1) Engines with 1-1/2 in.(38mm) I.D. circulating pump hose between thermostat hsg. and circulating pump

(2) Engines with 1-3/4 in.(45mm) I.D. circulating pump hose between thermostat hsg. and circulating pump

(3) Will not fit models with rear mounted heat exchanger

(4) Will fit models with rear mounted heat exchanger

(5) All models with 5/8 in.(16mm) hose

(6) All models with 17mm hose

(7) No kit available

(8) Not required for closd cooled engines

THRU TRANSOM EXHAUST OUTLETS

Outlets come with internal shutters and external flappers. Each kit includes 2 tips.

QUICK-CHANGE THRU TRANSOM EXHAUST TIPS



843434A 1

Polished stainless steel tips feature a in.quick change in. anti-backflow valve. 2 outlets per kit.

For 3 in. (76 mm) I.D. exhaust pipe. Fits all Mercury Racing and Mercury MerCruiser consumer sterndrive engine packages.

843426A 1

Polished stainless steel tips feature a in.quick change in. anti-backflow valve. 2 outlets per kit.

For 4 in. (102 mm) I.D. exhaust pipe. Fits all Mercury Racing and Mercury MerCruiser consumer sterndrive engine packages.

TRANSOM EXHAUST TIPS FLAPPER ASSEMBLY



8M0109049

This kit is to repair the internal rubber flapper baffle for one 3 in. (76 mm) I.D. exhaust tip 843434A1. Contains components to repair one exhaust tip.

Fits all Mercury Racing and Mercury MerCruiser consumer sterndrive engine packages that have the Quick-Change Thru Transom Exhaust Tips

TRANSOM EXHAUST TIPS FLAPPER ASSEMBLY



8M0109050

This kit is to repair the internal rubber flapper baffle for one 4 in. (102 mm) I.D. exhaust tip 843426A1. Contains components to repair one exhaust tip.

Fits all Mercury Racing and Mercury MerCruiser consumer sterndrive engine packages that have the Quick-Change Thru Transom Exhaust Tips.

TRANSOM EXHAUST TIPS REPAIR KIT



843434A 2

This kit is to repair the internal rubber flapper baffle for one 3 in. (76 mm) I.D. exhaust tip 843434A1. Contains components to repair one exhaust tip.

Fits all Mercury Racing and Mercury MerCruiser consumer sterndrive engine packages that have the Quick-Change Thru Transom Exhaust Tips

843426A 2

This kit is to repair the internal rubber flapper baffle for one 4 in. (102 mm) I.D. exhaust tip 843426A1. Contains components to repair one exhaust tip.

Fits all Mercury Racing and Mercury MerCruiser consumer sterndrive engine packages that have the Quick-Change Thru Transom Exhaust Tips

EXHAUST OUTLET FLAPPER KITS

EXHAUST FLAPPERS



34765A 2

For 3 in.(76 mm) O.D. exhaust outlets, 1 flapper in kit

12644A 1

For 4 in.(102 mm) O.D. exhaust outlets, 1 flapper in kit

EXHAUST BLOCK-OFF PLATE

Used to block-off the gimbal housing when thru transom exhaust is installed. Install plate before engine is installed.

EXHAUST BLOCK-OFF PLATE



861776A 2

EXHAUST PIPE KITS

EXHAUST "Y" PIPE KIT



807130A 6

For use with Silent Choice type exhaust systems. Also used to convert engines with thru transom exhaust to thru prop exhaust. Standard pipe on all thru prop exhaust gasoline sterndrive models.

Fits all V-8 engines with 4 in.(102 mm) exhaust systems; except MCM 8.1L & 8.2L engines

EXHAUST "Y" PIPE KIT



807130A21

Used to convert MCM 8.1L & 8.2L engines with thru transom exhaust to thru prop exhaust.
Also requires the use of intermediate elbow kit in conjunction with this "Y" Pipe Kit. For 8.1L & 8.2L non-Emissions Control engines, use 44267A02 or A03. For 8.1L Emissions Control engines, use 44267A04, A05, A06, A07 or A08. For 8.2L Emissions Control engines with three catalyst exhaust manifolds, use 879288A12, A13, A14, A15 or A16.

Fits all MCM 8.1L & 8.2L sterndrive engines, except 2012 & newer 8.2L EC engines with single catalyst exhaust manifolds.

INTERMEDIATE ELBOW KIT



44267A02

Used in conjunction with Exhaust "Y" Pipe kit 807130A21 to convert engine to thru prop exhaust.

Fits MCM 8.1L & 8.2L non-EC sterndrive engines with exhaust risers 2 in. (51 mm) to 8 in. (203 mm) high.

INTERMEDIATE ELBOW KIT



44267A03

Used in conjunction with Exhaust "Y" Pipe kit 807130A21 to convert engine to thru prop exhaust.

Fits MCM 8.1L & 8.2L non-EC sterndrive engines w/o exhaust risers and w/ exhaust risers up to 2 in. (51 mm) high.

INTERMEDIATE ELBOW KIT



44267A04

Used in conjunction with Exhaust "Y" Pipe kit 807130A21 to convert engine to thru prop exhaust.

Fits MCM 8.1L EC engines with standard 0" risers.

INTERMEDIATE ELBOW KIT



44267A05

Used in conjunction with Exhaust "Y" Pipe kit 807130A21 to convert engine to thru prop exhaust.

Fits MCM 8.1L EC engines with 2 in. (51 mm) risers.

INTERMEDIATE ELBOW KIT



44267A06

Used in conjunction with Exhaust "Y" Pipe kit 807130A21 to convert engine to thru prop exhaust.

Fits MCM 8.1L EC engines with 4 in. (102 mm) risers.

INTERMEDIATE ELBOW KIT



44267A07

Used in conjunction with Exhaust "Y" Pipe kit 807130A21 to convert engine to thru prop exhaust.

Fits MCM 8.1L EC engines with 6 in. (152 mm) risers.

INTERMEDIATE ELBOW KIT



44267A08

Used in conjunction with Exhaust "Y" Pipe kit 807130A21 to convert engine to thru prop exhaust.

Fits MCM 8.1L EC engines with 8 in. (203 mm) risers.

INTERMEDIATE ELBOW KIT



879288A12

Used in conjunction with Exhaust "Y" Pipe Kit 807130A21 to convert engine to thru prop exhaust.

Fits 2010-2012 MCM 8.2L EC engines with three catalyst exhaust manifolds and 0 in. risers

INTERMEDIATE ELBOW KIT



879288A13

Used in conjunction with Exhaust "Y" Pipe Kit 807130A21 to convert engine to thru prop exhaust.

Fits 2010-2012 MCM 8.2L EC engines with three catalyst exhaust manifolds and 2 in. (51 mm) risers (s/n 2A041664 and below)

INTERMEDIATE ELBOW KIT



879288A14

Used in conjunction with Exhaust "Y" Pipe Kit 807130A21 to convert engine to thru prop exhaust.

Fits 2010-2012 MCM 8.2L EC engines with three catalyst exhaust manifolds and 4 in. (102 mm) risers (s/n 2A041664 and below)

INTERMEDIATE ELBOW KIT



879288A15

Used in conjunction with Exhaust "Y" Pipe Kit 807130A21 to convert engine to thru prop exhaust.

Fits 2010-2012 MCM 8.2L EC engines with three catalyst exhaust manifolds and 6 in. (152 mm) risers (s/n 2A041664 and below)

INTERMEDIATE ELBOW KIT



879288A16

Used in conjunction with Exhaust "Y" Pipe Kit 807130A21 to convert engine to thru prop exhaust.

Fits 2010-1212 MCM 8.2L EC engines with three catalyst exhaust manifolds and 8 in. (203 mm) risers (s/n 2A041664 and below)

INTERMEDIATE ELBOW KIT



8M0095832

Required when changing exhaust elbow height to 2 in. (51 mm) risers.

Fits 2012 & newer MCM 8.2L EC engines with single catalyst exhaust manifolds and 2 in. (51 mm) risers (s/n 2A041665 and up)

INTERMEDIATE ELBOW KIT



8M0095833

Required when changing exhaust elbow height to 4 in. (102 mm) risers.

Fits 2012 & newer MCM 8.2L EC engines with single catalyst exhaust manifolds and 4 in. (102 mm) risers (s/n 2A041665 and up)

INTERMEDIATE ELBOW KIT



8M0095834

Required when changing exhaust elbow height to 6 in. (152 mm) risers.

Fits 2012 & newer MCM 8.2L EC engines with single catalyst exhaust manifolds and 6 in. (152 mm) risers (s/n 2A041665 and up)

EXHAUST "S" PIPE KIT



807611T

Optional exhaust pipe for Tow Sports non-EC engine models with 4 in.(102 mm) exhaust.

EXHAUST "S" PIPE KIT



18563A 1

Allows exhaust outlets to be mounted below a swim platform. 2 pipes in kit.

Fits V-8 sterndrive models with 4 in. (102 mm) exhaust (s/n 0W309999 and below)

EXHAUST REDUCER KIT



44349A 1

Reduces exhaust hose from 4 in.(102 mm) to 3 in.(76 mm). Straight reducer. 2 reducers in kit.

Fits MIE V-8 engines.

SILENT CHOICE EXHAUST SYSTEM

Allows switching back and forth from thru transom exhaust to thru propeller exhaust . May not be legal in some states. Designed for V-8 sterndrive models with 4 in.(102 mm) exhaust system. Cannot be used with 3 in.(76 mm) or 6 in.(152 mm) exhaust risers.

PNEUMATIC AIR PUMP



16645A 4

Only 1 kit required for single or dual engine applications.

EXHAUST "Y" PIPE KIT



807130A 6

For use with Silent Choice type exhaust systems. Also used to convert engines with thru transom exhaust to thru prop exhaust. Standard pipe on all thru prop exhaust gasoline sterndrive models.

Fits all V-8 engines with 4 in.(102 mm) exhaust systems; except MCM 8.1L & 8.2L engines

EXHAUST "Y" PIPE KIT



807130A21

Used to convert MCM 8.1L & 8.2L engines with thru transom exhaust to thru prop exhaust.
Also requires the use of intermediate elbow kit in conjunction with this "Y" Pipe Kit. For 8.1L & 8.2L non-Emissions Control engines, use 44267A02 or A03. For 8.1L Emissions Control engines, use 44267A04, A05, A06, A07 or A08. For 8.2L Emissions Control engines with three catalyst exhaust manifolds, use 879288A12, A13, A14, A15 or A16.

Fits all MCM 8.1L & 8.2L sterndrive engines, except 2012 & newer 8.2L EC engines with single catalyst exhaust manifolds.

EXHAUST RISER KITS FOR DIESEL ENGINES

Raises the height of the engines exhaust system to prevent water from entering the engine through the exhaust system.

RISER KIT



863330A 2

3 in.(76 mm)
Fits 2001-2009 MCM & CMD 1.7L diesel engines.

RISER KIT



805265A 1

5 in.(127 mm)
Fits 1990 and newer MCM & CMD 2.8L, 3.0L, 3.6L & 4.2L diesel engines.

RISER KIT



8M0098892

6 in. (127 mm)
Fits MIE 4.2L V8 TDI diesel engines.

NEW

EXHAUST RISER KITS (GAS, WET JOINT, 2002 & OLDER)

Raises the height of the engines exhaust system to prevent water from entering the engine through the exhaust system. Maximum height of 9 in.(228 mm). Two different types of exhaust elbows have been used (cast iron and stainless steel). To tell which one you have, look at the elbows mounting bolts. Cast iron elbows use 4 long bolts. Stainless steel elbows use four short 1 in.(25 mm) long bolts. For MCM/MIE 8.1L engines see "Exhaust Elbow/Riser Kits (8.1L) Non-Emissions Ctrl" section.

RISER KIT



93320A14

3 in.(76 mm)

Fits 1997 & older MCM/MIE V-8 engines with stainless steel exhaust elbows.

RISER KIT



93320A13

3 in. (76 mm)

Fits MCM V-6 carb & TBI engines with 2 piece exhaust manifolds (s/n 0M614999 & below).
Fits MCM/MIE/Tow Sports V-8 (305, 350, 377, 454 & 502 cid) engines with cast iron elbows (s/n 0M299999 & below); MCM V-8 (305 & 350 cid) carb engines (s/n 0M300000-0M599999) and MIE & Tow Sports carb engines (s/n 0M300000-0M316999).

RISER KIT



93320A15

3 in. (76 mm)

Fits 2001-2002 MCM 4.3L MPI (s/n 0M300000-0M614999);
Fits 2001-2002 MCM V-8 (305, 350 & 377 cid) MPI engines (s/n 0M300000-0M599999);
Fits 2001-2002 MIE & Tow Sports V-8 (350 & 377 cid) MPI engines (s/n 0M300000-0M316999)

RISER KIT



807477A 5

6 in.(152 mm)

Fits 1997 & older V-8 with stainless steel exhaust elbows.

RISER KIT



93322A12

6 in. (152 mm)

Fits MCM V-6 carb & TBI engines with 2 piece exhaust manifolds (s/n 0M614999 & below).
Fits MCM/MIE/Tow Sports V-8 (305, 350, 377, 454 & 502 cid) engines with cast iron elbows (s/n 0M299999 & below); MCM V-8 (305 & 350 cid) carb engines (s/n 0M300000-0M599999) and MIE & Tow Sports carb engines (s/n 0M300000-0M316999).

RISER KIT



93322A10

6 in. (152 mm)

Fits 2001-2002 MCM 4.3L MPI (s/n 0M300000-0M614999);
Fits 2001-2002 MCM V-8 (305, 350 & 377 cid) MPI engines (s/n 0M300000-0M599999);
Fits 2001-2002 MIE & Tow Sports V-8 (350 & 377 cid) MPI engines (s/n 0M300000-0M316999)

INTERMEDIATE ELBOW KIT



14865A02

Only required on sterndrive engines that have the exhaust going through the prop.
Fits MCM V-6 with 2 piece exhaust manifolds and 3 in. (76 mm) risers - s/n 0W309999 and below

INTERMEDIATE ELBOW KIT



14865A 1

Only required on sterndrive engines that have the exhaust going through the prop.
Fits MCM V-6 with 2 piece exhaust manifolds and 6 in. (152 mm) risers - s/n 0W309999 and below

INTERMEDIATE ELBOW KIT



14801A 1

Only required on sterndrive engines that have the exhaust going through the prop.
Fits MCM V-8 (305, 350 & 377 cid) engines (0W309999 and below)

INTERMEDIATE ELBOW KIT



807963A 1

Only required on sterndrive engines that have the exhaust going through the prop.
Fits MCM V-8 (454 & 502 cid) engines.

EXHAUST RISER KITS (GAS, DRY JOINT, SMALL BLOCK, NON-EC, 2002 & NEWER)

Raises the height of the GM V-6 & V-8 small block (non-EC) engines with dry joint exhaust system to prevent water from entering the engine through the exhaust system. Maximum height of 6 in. (152 mm). For MCM/MIE 8.1L & 8.2L (non-EC) engines see "Exhaust Elbow/Riser Kits (8.1L & 8.2L) Non-Emissions Ctrl" section. For EC engines, see the Emissions Control Riser section.
NOTE: For 4.5L V6 (non-EC) engines see "Exhaust Riser Kits (Gas, Small Block, Emissions Control)" since the 4.5L V6 (non-EC) engines use the same riser kits as the 4.5 V6 EC engines.

RISER KIT



865995A01

1.7 in. (43 mm) for standard cooling and dry joint exhaust manifolds.
Fits 2004 and newer MCM V-6 & V-8 (305, 350 & 377 cid) non-EC engines (s/n 0W310000 and up) & MIE V-8 (350 & 377 cid) non-EC engines (s/n 0M390000 and up).

RISER KIT



865996A01

1.7 in. (43 mm) for CLOSED COOLING and dry joint exhaust manifolds.
Fits 2004 and newer MCM V-6 & V-8 (305, 350 & 377 cid) non-EC engines (s/n 0W310000 and up) & MIE V-8 (350 & 377 cid) non-EC engines (s/n 0M390000 and up).

RISER KIT



866007A01

1.7 in. (43 mm) for standard cooling and dry joint exhaust manifolds.
Fits Tow Sports V-8 (350 & 377 cid) non-EC engines w/ in-line transmission (s/n 0M390000 and up).

RISER KIT



864306A 3

3 in. (76 mm) for standard cooling and dry joint exhaust manifolds.

Fits 2002 MCM V-8 (305, 350 & 377 cid) non-EC engines (s/n 0M600000-0M614999).

RISER KIT



864306A 2

3 in. (76 mm) for CLOSED COOLING and dry joint exhaust manifolds.

Fits 2002 MCM V-8 (305, 350 & 377 cid) non-EC engines (s/n 0M600000-0M614999).

RISER KIT



864306A 5

3 in. (76 mm) for standard cooling and dry joint exhaust manifolds.

Fits 2002 MIE V-8 (350 & 377 cid) non-EC engines (s/n 0M317000-0M389999).

RISER KIT



864306A 4

3 in. (76 mm) for CLOSED COOLING and dry joint exhaust manifolds.

Fits 2002 MIE V-8 (350 & 377 cid) non-EC engines (s/n 0M317000-0M389999).

RISER KIT



864929A 1

3 in. (76 mm) for standard cooling and dry joint exhaust manifolds.

Fits 2002-2004 MCM V-6 & V-8 (305, 350 & 377 cid) non-EC engines (s/n 0M615000-0W309999).

RISER KIT



864929A 2

3 in. (76 mm) for CLOSED COOLING and dry joint exhaust manifolds.

Fits 2002-2004 MCM V-6 & V-8 (305, 350 & 377 cid) non-EC engines (s/n 0M615000-0W309999).

RISER KIT



864929A 3

3 in. (76 mm) for standard cooling and dry joint exhaust manifolds.

Fits 2004 and newer MCM V-6 & V-8 (305, 350 & 377 cid) non-EC engines (s/n 0W310000 and up); also fits 2002 and newer MIE V-8 (350 & 377 cid) non-EC engines (s/n 0M390000 and up)

RISER KIT



864929A 4

3 in. (76 mm) for CLOSED COOLING and dry joint exhaust manifolds.

Fits 2004 and newer MCM V-6 & V-8 (305, 350 & 377 cid) non-EC engines (s/n 0W310000 and up); also fits 2002 and newer MIE V-8 (350 & 377 cid) non-EC engines (s/n 0M390000 and up)

RISER KIT



866208A02

4.7 in. (119 mm) for standard cooling and dry joint exhaust manifolds.

Fits 2004 and newer MCM V-6 & V-8 (305, 350 & 377 cid) non-EC engines (s/n 0W310000 and up); also fits 2002 and newer MIE V-8 (350 & 377 cid) non-EC engines (s/n 0M390000 and up)

RISER KIT



866208A03

4.7 in. (119 mm) for CLOSED COOLING and dry joint exhaust manifolds.

Fits 2004 and newer MCM V-6 & V-8 (305, 350 & 377 cid) non-EC engines (s/n 0W310000 and up); also fits 2002 and newer MIE V-8 (350 & 377 cid) non-EC engines (s/n 0M390000 and up)

RISER KIT



864908A07

6 in. (152 mm) for standard cooling and dry joint exhaust manifolds.

Fits 2002 MCM V-8 (305, 350 & 377 cid) non-EC engines (s/n 0M600000-0M614999) & MIE V-8 (350 & 377 cid) non-EC engines (s/n 0M317000-0M389999).
Warning! Use of these risers on engines outside the specified s/n range may be detrimental to the engine.

RISER KIT



864908A06

6 in. (152 mm) for CLOSED COOLING and dry joint exhaust manifolds.

Fits 2002 MCM V-8 (305, 350 & 377 cid) non-EC engines (s/n 0M600000-0M614999) & MIE V-8 (350 & 377 cid) non-EC engines (s/n 0M317000-0M389999).
Warning! Use of these risers on engines outside the specified s/n range may be detrimental to the engine.

RISER KIT



864908A 1

6 in. (152 mm) for standard cooling and dry joint exhaust manifolds.

Fits 2004 and newer MCM V-6 (s/n 0W310000 and up); 2002 and newer MCM V-8 (305, 350 & 377 cid) non-EC engines (s/n 0M615000 and up) & MIE V-8 (350 & 377 cid) non-EC engines (s/n 0M390000 and up).

RISER KIT



864908A 2

6 in. (152 mm) for CLOSED COOLING and dry joint exhaust manifolds.

Fits 2004 and newer MCM V-6 (s/n 0W310000 and up); 2002 and newer MCM V-8 (305, 350 & 377 cid) non-EC engines (s/n 0M615000 and up) & MIE V-8 (350 & 377 cid) non-EC engines (s/n 0M390000 and up).

RISER HOSE KIT



32-865022A 1

Used in conjunction with 3 in. (76 mm), 4.7 in. (119 mm) & 6 in. (152 mm) exhaust risers & standard cooling

Fits 2002 and newer MCM 4.3L MPI engines (s/n 0M615000 and up).

RISER HOSE KIT



32-865024A 1

Used in conjunction with 1.7 in.(43 mm) & 3 in. (76 mm) exhaust risers & CLOSED COOLING

Fits 2002 and newer MCM 4.3L engines (s/n 0M615000 and up).

RISER HOSE KIT



32-865027A 1

Used in conjunction with 3 in. (76 mm) exhaust risers & standard cooling

Fits 2002 and newer MCM 4.3L MPI engines with 7 point drain system (s/n 0M615000 and up).

RISER HOSE KIT



32-865029A 1

Used in conjunction with 1.7 in. (43 mm) & 3 in. (76 mm) exhaust risers & CLOSED COOLING

Fits 2002 and newer MCM V-8 (305, 350 & 377 cid) MPI engines (s/n 0M615000 and up) & MIE V-8 (350 & 377 cid) MPI engines (s/n 0M390000 and up)

RISER HOSE KIT



32-865998A01

Used in conjunction with 4.7 in. (119 mm) & 6 in. (152 mm) exhaust risers & CLOSED COOLING

Fits 2004 and newer MCM 4.3L MPI engines (s/n 0W310000 and up).

RISER HOSE KIT



32-865033A 1

Used in conjunction with 4.7 in. (119 mm) & 6 in. (152 mm) exhaust risers & standard cooling

Fits 2002 and newer MCM V-8 (305, 350 & 377 cid) MPI engines with 1 or 3 point drain system (s/n 0M615000 and up).

RISER HOSE KIT



32-865035A 1

Used in conjunction with 4.7 in. (119 mm) & 6 in. (152 mm) exhaust risers & standard cooling

Fits 2002 and newer MIE V-8 (350 & 377 cid) MPI engine with in-line transmission (s/n 0M390000 and up).

RISER HOSE KIT



32-865039A 1

Used in conjunction with 4.7 in. (119 mm) & 6 in. (152 mm) exhaust risers & CLOSED COOLING

Fits 2002 and newer MCM V-8 (305, 350 & 377 cid) MPI engines (s/n 0M615000 and up) & MIE V-8 (350 & 377 cid) MPI engines with in-line transmission (s/n 0M390000 and up).

RISER HOSE KIT



32-865041A 1

Used in conjunction with 4.7 in. (119 mm) & 6 in. (152 mm) exhaust risers & CLOSED COOLING

Fits 2002 and newer MIE V-8 (350 & 377 cid) MPI engines with V-drive transmission (s/n 0M390000 and up).

RISER HOSE KIT



32-865043A 1

Used in conjunction with 1.7 in. (43 mm), 3 in. (76 mm), 4.7 in. (119 mm) & 6 in. (152 mm) exhaust risers & standard cooling

Fits 2002 and newer MIE V-8 (350 cid) carb engines with V-drive transmission (s/n 0M390000 and up).

INTERMEDIATE ELBOW KIT



14865A02

Only required on sterndrive engines that have the exhaust going through the prop.

Fits MCM V-6 with 2 piece exhaust manifolds and 3 in. (76 mm) risers - s/n 0W309999 and below

INTERMEDIATE ELBOW KIT



14865A 1

Only required on sterndrive engines that have the exhaust going through the prop.

Fits MCM V-6 with 2 piece exhaust manifolds and 6 in. (152 mm) risers - s/n 0W309999 and below

INTERMEDIATE ELBOW KIT



866000A01

Only required on sterndrive engines that have the exhaust going through the prop.

Fits MCM V-6 with 1.7 in. (43 mm) risers (s/n 0W310000 and up)

INTERMEDIATE ELBOW KIT



866001A01

Only required on sterndrive engines that have the exhaust going through the prop.

Fits MCM V-6 with 3 in. (76 mm) risers (s/n 0W310000 and up)

INTERMEDIATE ELBOW KIT



865949A01

Only required on sterndrive engines that have the exhaust going through the prop. Fits MCM V-6 with 4.7 in. (119 mm) risers (s/n 0W310000 and up)

INTERMEDIATE ELBOW KIT



866002A01

Only required on sterndrive engines that have the exhaust going through the prop. Fits MCM V-6 with 6 in. (152 mm) risers (s/n 0W310000 and up)

INTERMEDIATE ELBOW KIT



14801A 1

Only required on sterndrive engines that have the exhaust going through the prop. Fits MCM V-8 (305, 350 & 377 cid) engines (0W309999 and below)

INTERMEDIATE ELBOW KIT



866003A01

Only required on sterndrive engines that have the exhaust going through the prop. Fits MCM V-8 (305, 350 & 377 cid) engines with 1.7 in. (43 mm) risers (s/n 0W310000 and up)

INTERMEDIATE ELBOW KIT



866004A01

Only required on sterndrive engines that have the exhaust going through the prop. Fits MCM V-8 (305, 350 & 377 cid) engines with 3 in. (76 mm) risers (s/n 0W310000 and up)

INTERMEDIATE ELBOW KIT



866209A01

Only required on sterndrive engines that have the exhaust going through the prop. Fits MCM V-8 (305, 350 & 377 cid) engines with 4.7 in. (119 mm) risers (s/n 0W310000 and up)

INTERMEDIATE ELBOW KIT



866005A01

Only required on sterndrive engines that have the exhaust going through the prop. Fits MCM V-8 (305, 350 & 377 cid) engines with 6 in. (152 mm) risers (s/n 0W310000 and up)

DROP DOWN BRACKET



863714T01

Used in conjunction with the 1.7 in. (43 mm) riser kits to relocate the shift plate to a lower position. Bracket is only necessary when boat hull design interferes with shift cable routing.

EXHAUST ELBOW/RISER KITS (8.1L & 8.2L, NON-EC, 2001 & NEWER)

Raises the height of the engines exhaust system to prevent water from entering the engine through the exhaust system. Maximum height of 8 in.(203 mm) available. For use on MCM/MIE 8.1L & 8.2L Non-Emissions Control engines only.

EXHAUST ELBOW KIT - 2 IN.(51 MM)



862974A05

This elbow is 2 in.(51 mm) higher than the standard elbow. This replaces what was the 3 in.(76 mm) riser kit used on previous big block engines.

Fits MCM/MIE 8.1L & 8.2L non-EC engines

RISER KIT - 6 IN.(152 MM)



863124A02

This riser will raise the elbow an additional 6 in.(152 mm). If the engine has a 2 in.(51 mm) elbow already on engine, but only needs an additional 4 in.(102 mm) rise, this kit will not work. Order 862354A 1 Exh. Elbow/Riser kit instead.

Fits MCM/MIE 8.1L & 8.2L non-EC engines

EXHAUST ELBOW/RISER KIT - 6 IN.(152 MM)



862354A04

Order this kit if the engine has a 2 in.(51 mm) elbow already installed on it, but only needs an additional 4 in.(102 mm) rise. The 2 in.(51 mm) elbow is removed and replaced with the standard rise elbows and a 6 in.(152 mm) riser kit which are included in kit.

Fits MCM/MIE 8.1L & 8.2L non-EC engines

EXHAUST ELBOW/RISER KIT - 8 IN.(203 MM)



862974A06

If the engine has a standard rise elbow already on engine and needs another 8 in.(203 mm) rise, order this kit. The standard rise elbow is removed and replaced with a 2 in.(51 mm) rise elbow and a 6 in.(152 mm) riser kit which are included in this kit.

Fits MCM/MIE 8.1L & 8.2L non-EC engines

EXHAUST "Y" PIPE KIT



807130A21

Used to convert MCM 8.1L & 8.2L engines with thru transom exhaust to thru prop exhaust.
Also requires the use of intermediate elbow kit in conjunction with this "Y" Pipe Kit. For 8.1L & 8.2L non-Emissions Control engines, use 44267A02 or A03. For 8.1L Emissions Control engines, use 44267A04, A05, A06, A07 or A08. For 8.2L Emissions Control engines with three catalyst exhaust manifolds, use 879288A12, A13, A14, A15 or A16.

Fits all MCM 8.1L & 8.2L sterndrive engines, except 2012 & newer 8.2L EC engines with single catalyst exhaust manifolds.

INTERMEDIATE ELBOW KIT



44267A02

Used in conjunction with Exhaust "Y" Pipe kit 807130A21 to convert engine to thru prop exhaust.

Fits MCM 8.1L & 8.2L non-EC sterndrive engines with exhaust risers 2 in. (51 mm) to 8 in. (203 mm) high.

INTERMEDIATE ELBOW KIT



44267A03

Used in conjunction with Exhaust "Y" Pipe kit 807130A21 to convert engine to thru prop exhaust.

Fits MCM 8.1L & 8.2L non-EC sterndrive engines w/o exhaust risers and w/ exhaust risers up to 2 in. (51 mm) high.

EXHAUST RISER CHART - GASOLINE ENGINE (NON-EC ENGINES)

1.7 in. (43 mm) Exhaust Risers-Gasoline Engines

Engine Model	Model Note	Year Range	Serial # Range	1.7 in.(43 mm) Riser Kit	Hose Kit	Intermediate Elbow Kit
	MCM STERNDRIVE MODELS					
MCM V-6 (262 cid)	Engines with standard cooling	2004 - 2016	0W310000 and up	865995A01(2)	(1)	866000A01(3)
MCM V-6 (262 cid)	Engines with closed cooling	2004 - 2016	0W310000 and up	865996A01(2)	32-865024A 1	866000A01(3)
MCM V-8 (305, 350 & 377 cid)	Engines with standard cooling	2004 - 2016	0W310000 and up	865995A01(2)	(1)	866003A01(3)
MCM V-8 (305 & 350 cid)	Carb engines with closed cooling	2004 - 2016	0W310000 and up	865996A01(2)	(1)	866003A01(3)
MCM V-8 (305, 350 & 377 cid)	MPI engines with closed cooling	2004 - 2016	0W310000 and up	865996A01(2)	32-865029A 1	866003A01(3)
	MIE INBOARD MODELS					
MIE V-8 (350 cid)	Carb engines with standard cooling (in-line)	2002 - 2016	0M390000 and up	865995A01	(1)	(1)
MIE V-8 (350 cid)	Carb engines with standard cooling (V-drive)	2002 - 2016	0M390000 and up	865995A01	32-865043A 1	(1)
MIE V-8 (350 cid)	Carb engines with closed cooling	2002 - 2016	0M390000 and up	865996A01	(1)	(1)
MIE V-8 (350 & 377 cid)	MPI engines with standard cooling	2002 - 2016	0M390000 and up	865995A01	32-865029A 1	(1)
MIE V-8 (350 & 377 cid)	MPI engines with closed cooling	2002 - 2016	0M390000 and up	865996A01	32-865029A 1	(1)
	MIE TOW SPORTS MODELS					
SKI V-8 (350 & 377 cid)	MPI engines	2002 - 2016	0M390000 and up	866007A01	(1)	(1)

(1) Kit not required

(2) Additional kit(s) listed are only required upon initial installation of a riser kit. If replacing existing risers, additional kit(s) listed are not required.

(3) Installation kit is only required on sterndrive engines that have the exhaust going thru the propeller.

3 in. (76 mm) Exhaust Risers-Gasoline Engines

Engine Model	Model Note	Year Range	Serial # Range	3 in.(76 mm) Riser Kit	Hose Kit	Intermediate Elbow Kit
	MCM STERNDRIVE MODELS					
MCM 4 cyl. (153 cid)		1983 - 1989	6229718 - 0C853255	N.L.A.	(6)	N.L.A.
MCM 4 cyl. (181 cid)		1983 - 1989	6229718 - 0C853255	N.L.A.	(6)	N.L.A.
MCM 4 cyl. (181 cid)		1990 - 2016	0C856559 and up	(5)	N/A	N/A
MCM V-6 (229 cid)		1983 - 1984	6330183 - 6919655	93320A13(1)	(6)	N.L.A.(3)
MCM V-6 (262 cid)		1985 - 1986	0A331455 - 0B527954	93320A13(1)	(6)	N.L.A.(3)
MCM V-6 (262 cid)		1987 - 2001	0B527955 - 0M299999	93320A13(1)(4)(7)	(6)	14865A02(3)

Engine Model	Model Note	Year Range	Serial # Range	3 in.(76 mm) Riser Kit	Hose Kit	Intermediate Elbow Kit
MCM V-6 (262 cid)	Carb engines	2002	0M300000 - 0M614999	93320A13(7)	(6)	14865A02(3)
MCM V-6 (262 cid)	Carb engines with standard cooling	2002 - 2004	0M615000 - 0W309999	864929A 1(7)	(6)	14865A02(3)
MCM V-6 (262 cid)	Carb engines with standard cooling	2004 - 2016	0W310000 and up	864929A 3(7)	(6)	866001A01(3)
MCM V-6 (262 cid)	Carb engines with closed cooling	2004	0W000000 - 0W309999	864929A 2(7)	32-865024A 1	14865A02(3)
MCM V-6 (262 cid)	Carb engines with closed cooling	2004 - 2016	0W310000 and up	864929A 4(7)	32-865024A 1	866001A01(3)
MCM V-6 (262 cid)	MPI engines	2002	0M300000 - 0M614999	93320A15(7)	(6)	14865A02(3)
MCM V-6 (262 cid)	MPI engines w/ standard cooling (1 & 3 point drain	2002 - 2004	0M615000 - 0W309999	864929A 1(7)	32-865022A 1	14865A02(3)
MCM V-6 (262 cid)	MPI engines w/ standard cooling (1 & 3 point drain	2004 - 2016	0W310000 and up	864929A 3(7)	32-865022A 1	866001A01(3)
MCM V-6 (262 cid)	MPI engines with standard cooling (7 point drain)	2002 - 2004	0M615000 - 0W309999	864929A 1(7)	32-865027A 1	14865A02(3)
MCM V-6 (262 cid)	MPI engines with standard cooling (7 point drain)	2004 - 2016	0W310000 and up	864929A 3(7)	32-865027A 1	866001A01(3)
MCM V-6 (262 cid)	MPI engines with closed cooling	2002 - 2004	0M615000 - 0W309999	864929A 2(7)	32-865024A 1	14865A02(3)
MCM V-6 (262 cid)	MPI engines with closed cooling	2004 - 2016	0W310000 and up	864929A 4(7)	32-865024A 1	866001A01(3)
MCM V-8 (305 & 350 cid)		1981 - 1984	5907058 - 0B525981	93320A13(1)	(6)	N.L.A.(3)
MCM V-8 (305 & 350 cid)	Cast iron exhaust elbows	1985 - 2001	0B525982 - 0M299999	93320A13(1)(7)	(6)	14801A 1(3)
MCM V-8 (305 & 350 cid)	Stainless steel exhaust elbows	1991 - 1997	0D445800 - 0K999999	93320A14(1)(7)	(6)	14801A 1(3)
MCM V-8 (305 & 350 cid)	Carb engines	2002	0M300000 - 0M599999	93320A13(7)	(6)	14801A 1(3)
MCM V-8 (305 & 350 cid)	Carb engines with standard cooling	2002	0M600000 - 0M614999	864306A 3(7)	(6)	14801A 1(3)
MCM V-8 (305 & 350 cid)	Carb engines with standard cooling	2002 - 2004	0M615000 - 0W309999	864929A 1(7)	(6)	14801A 1(3)
MCM V-8 (305 & 350 cid)	Carb engines with standard cooling	2004 - 2016	0W310000 and up	864929A 3(3)	(6)	866004A01(3)
MCM V-8 (305 & 350 cid)	Carb engines with closed cooling	2002	0M600000 - 0M614999	864306A 2(7)	(6)	14801A 1(3)
MCM V-8 (305 & 350 cid)	Carb engines with closed cooling	2002 - 2004	0M615000 - 0W309999	864929A 2(7)	(6)	14801A 1(3)
MCM V-8 (305 & 350 cid)	Carb engines with closed cooling	2004 - 2016	0W310000 and up	864929A 4(7)	(6)	866004A01(3)
MCM V-8 (305, 350 & 377 cid)	MPI engines	2002	0M300000 - 0M599999	93320A15(7)	(6)	14801A 1(3)
MCM V-8 (305, 350 & 377 cid)	MPI engines with standard cooling	2002	0M600000 - 0M614999	864306A 3(7)	(6)	14801A 1(3)
MCM V-8 (305, 350 & 377 cid)	MPI engines with standard cooling	2002 - 2004	0M615000 - 0W309999	864929A 1(7)	(6)	14801A 1(3)
MCM V-8 (305, 350 & 377 cid)	MPI engines with standard cooling	2004 - 2016	0W310000 and up	864929A 3(7)	(6)	866004A01(3)
MCM V-8 (305, 350 & 377 cid)	MPI engines with closed cooling	2002	0M600000 - 0M614999	864306A 2(7)	(6)	14801A 1(3)
MCM V-8 (305, 350 & 377 cid)	MPI engines with closed cooling	2002 - 2004	0M615000 - 0W309999	864929A 2(7)	32-865029A 1	14801A 1(3)
MCM V-8 (305, 350 & 377 cid)	MPI engines with closed cooling	2004 - 2016	0W310000 and up	864929A 4(7)	32-865029A 1	866004A01(3)
MCM V-8 (454 cid)	TR/TRS drive	1982 - 1989	6083145 and up	93320A13(1)	(6)	N.L.A.
MCM V-8 (454 or 502 cid)	Cast iron exhaust elbows	1981 - 2002	5889914 and up	93320A13(1)(7)	(6)	807963A 1(3)
MCM V-8 (454 or 502 cid)	Stainless steel exhaust elbows	1991 - 1997	0D445800 - 0K999999	93320A14(1)(7)	(6)	807963A 1(3)
	MIE INBOARD MODELS					
MIE V-8 (305 & 350 cid)		1981 - 1988	5907058 - 0C396832	93320A13(1)	(6)	(6)
MIE V-8 (350 cid)		1989 - 2001	0C396833 - 0M299999	93320A13(1)	(6)	(6)
MIE V-8 (350 cid)	Carb engines	2002	0M300000 - 0M316999	93320A13	(6)	(6)
MIE V-8 (350 cid)	Carb engines with standard cooling	2002	0M317000 - 0M389999	864306A 5	(6)	(6)
MIE V-8 (350 cid)	Carb engines with standard cooling (in-line)	2002 - 2016	0M390000 and up	864929A 3	(6)	(6)
MIE V-8 (350 cid)	Carb engines with standard cooling (V-drive)	2002 - 2016	0M390000 and up	864929A 3(7)	32-865043A 1	(6)
MIE V-8 (350 cid)	Carb engines with closed cooling	2002	0M317000 - 0M389999	864306A 4	(6)	(6)
MIE V-8 (350 cid)	Carb engines with closed cooling	2002 - 2016	0M390000 and up	864929A 4	(6)	(6)
MIE V-8 (350 & 377 cid)	MPI engines	2002	0M300000 - 0M316999	93320A15	(6)	(6)
MIE V-8 (350 & 377 cid)	MPI engines with standard cooling	2002	0M317000 - 0M389999	864306A 5	(6)	(6)
MIE V-8 (350 & 377 cid)	MPI engines with standard cooling	2002 - 2016	0M390000 and up	864929A 3	(6)	(6)
MIE V-8 (350 & 377 cid)	MPI engines with closed cooling	2002	0M317000 - 0M389999	864306A 4	(6)	(6)
MIE V-8 (350 & 377 cid)	MPI engines with closed cooling	2002 - 2016	0M390000 and up	864929A 4(7)	32-865029A 1	(6)
MIE V-8 (454 or 502 cid)	Cast iron exhaust elbows	1981 - 2002	5889914 and up	93320A13(1)	(6)	(6)
MIE V-8 (454 or 502 cid)	Stainless steel exhaust elbows	1991 - 1997	0D445800 - 0K999999	93320A14(1)	(6)	(6)

Engine Model	Model Note	Year Range	Serial # Range	3 in.(76 mm) Riser Kit	Hose Kit	Intermediate Elbow Kit
	MIE TOW SPORTS MODELS					
SKI V-8 (350 cid)		1985 - 1984	0A338553 - 0B525981	93320A13(1)	(6)	(6)
SKI V-8 (350 & 377cid)		1985 - 2001	0B525982 - 0M299999	93320A13(1)	(6)	(6)
SKI V-8 (350 cid)	Carb engines	2002	0M300000 - 0M316999	93320A13	(6)	(6)
SKI V-8 (350 cid)	Carb engines	2002 - 2016	0M317000 and up	(5)	N/A	N/A
SKI V-8 (350 & 377 cid)	MPI engines	2002	0M300000 - 0M316999	93320A15	(6)	(6)
SKI V-8 (350 & 377 cid)	MPI engines	2002 - 2016	0M317000 and up	(5)	N/A	N/A

(1) If riser is going on a 1997 and older engine, that has the exhaust manifolds in the closed cooling system, also order 2 pcs. of 27-860231 separator gaskets to go between the manifold and risers.

(3) Installation Kit is only required on sterndrive engines that have the exhaust going thru the propeller.

(4) Will not fit MCM V-6 engines with the 1 pc exhaust manifold.

(5) No kit available

(6) Kit not required

(7) Additional kit(s) listed are only required upon initial installation of a riser kit. If replacing existing risers, additional kit(s) listed are not required.

4.7 in. (119 mm) Exhaust Risers-Gasoline Engines

Engine Model	Model Note	Year Range	Serial # Range	4.7 in.(119 mm) Riser Kit	Hose Kit	Intermediate Elbow Kit
	MCM STERNDRIVE MODELS					
MCM V-6 (262 cid)	Carb engines with standard cooling	2004 - 2016	0W310000 and up	866208A02(3)	(2)	865949A01(4)
MCM V-6 (262 cid)	Carb engines with closed cooling	2004 - 2016	0W310000 and up	866208A03(3)	(2)	865949A01(4)
MCM V-6 (262 cid)	MPI engines with standard cooling (7 point drain)	2004 - 2016	0W310000 and up	866208A02(3)	32-865022A 1	865949A01(4)
MCM V-6 (262 cid)	MPI engines with closed cooling	2004 - 2016	0W310000 and up	866208A03(3)	32-865998A01	865949A01(4)
MCM V-8 (305 & 350 cid)	Carb engines with standard cooling	2004 - 2016	0W310000 and up	866208A02(3)	(2)	866209A01(4)
MCM V-8 (305 & 350 cid)	Carb engines with closed cooling	2004 - 2016	0W310000 and up	866208A03(3)	32-865039A 1	866209A01(4)
MCM V-8 (305, 350 & 377 cid)	MPI engines w/ standard cooling 1 & 3 point drain)	2004 - 2016	0W310000 and up	866208A02(3)	32-865033A 1	866209A01(4)
MCM V-8 (305, 350 & 377 cid)	MPI engines with standard cooling (7 point drain)	2004 - 2016	0W310000 and up	866208A02(3)	(2)	866209A01(4)
MCM V-8 (305, 350 & 377 cid)	MPI engines with closed cooling	2004 - 2016	0W310000 and up	866208A03(3)	32-865039A 1	866209A01(4)
	MIE INBOARD MODELS					
MIE V-8 (350 cid)	Carb engines with standard cooling (in-line)	2002 - 2016	0M390000 and up	866208A02	(2)	(2)
MIE V-8 (350 cid)	Carb engines with standard cooling (V-drive)	2002 - 2016	0M390000 and up	866208A02(3)	32-865043A 1	(2)
MIE V-8 (350 cid)	Carb engines with closed cooling	2002 - 2016	0M390000 and up	866208A03(3)	32-865039A 1	(2)
MIE V-8 (350 & 377 cid)	MPI engines with standard cooling (in-line)	2002 - 2016	0M390000 and up	866208A02(3)	32-865035A 1	(2)
MIE V-8 (350 & 377 cid)	MPI engines with standard cooling (V-drive)	2002 - 2016	0M390000 and up	866208A02(3)	N.L.A.	(2)
MIE V-8 (350 & 377 cid)	MPI engines with closed cooling (in-line)	2002 - 2016	0M390000 and up	866208A03(3)	32-865039A 1	(2)
MIE V-8 (350 & 377 cid)	MPI engines with closed cooling (V-drive)	2002 - 2016	0M390000 and up	866208A03(3)	32-865041A 1	(2)
	MIE TOW SPORTS MODELS					
SKI V-8 (350 & 377 cid)	MPI engines	2002 - 2016	0M390000 and up	(1)	N/A	N/A

(1) No kit available

(2) Kit not required

(3) Additional kit(s) listed are only required upon initial installation of a riser kit. If replacing existing risers, additional kit(s) listed are not required.

(4) Installation kit is only required on sterndrive engines that have the exhaust going thru the propeller.

6 in. (152 mm) Exhaust Risers-Gasoline Engines

Engine Model	Model Note	Year Range	Serial # Range	6 in.(152 mm) Riser Kit	Hose Kit	Intermediate Elbow Kit
	MCM STERNDRIVE MODELS					
MCM 4 cyl. (153 cid)		1983 - 1989	6229718 - 0C853255	N.L.A.	(6)	N.L.A.
MCM 4 cyl. (181 cid)		1983 - 1989	6229718 - 0C853255	N.L.A.	(6)	N.L.A.
MCM 4 cyl. (181 cid)		1990 - 2016	0C856559 and up	(5)	N/A	N/A
MCM V-6 (229 cid)		1983 - 1984	6330183 - 6919655	93322A12(1)(2)	(6)	N.L.A.(3)
MCM V-6 (262 cid)		1985 - 1986	0A331455 - 0B527954	93322A12(1)(2)	(6)	N.L.A.(3)
MCM V-6 (262 cid)		1987 - 2001	0B527955 - 0M299999	93322A12(1)(2)(4)	(6)	14865A 1(3)
MCM V-6 (262 cid)	Carb engines	2002	0M300000 - 0M614999	93322A12(7)	(6)	14865A 1(3)
MCM V-6 (262 cid)	Carb engines with standard cooling	2002 - 2004	0M615000 - 0W309999	(5)	N/A	N/A
MCM V-6 (262 cid)	Carb engines with standard cooling	2004 - 2016	0W310000 and up	864908A 1(7)	(6)	866002A01(3)
MCM V-6 (262 cid)	Carb engines with closed cooling	2004	0W000000 - 0W309999	(5)	N/A	N/A
MCM V-6 (262 cid)	Carb engines with closed cooling	2004 - 2016	0W310000 and up	864908A 2(8)	(6)	866002A01(3)
MCM V-6 (262 cid)	MPI engines	2002	0M300000 - 0M614999	93322A10(7)	(6)	14865A 1(3)
MCM V-6 (262 cid)	MPI engines with standard cooling	2002 - 2004	0M615000 - 0W309999	(5)	N/A	N/A
MCM V-6 (262 cid)	MPI engines with standard cooling	2004 - 2016	0W310000 and up	864908A 1(7)	32-865022A 1	866002A01(3)
MCM V-6 (262 cid)	MPI engines with closed cooling	2002 - 2004	0M615000 - 0W309999	(5)	N/A	N/A
MCM V-6 (262 cid)	MPI engines with closed cooling	2004 - 2016	0W310000 and up	864908A 2(7)	32-865998A01	866002A01(3)
MCM V-8 (305 & 350 cid)		1981 - 1984	5907058 - 0B525981	93322A12(1)(2)	(6)	N.L.A.(3)
MCM V-8 (305 & 350 cid)	Cast iron exhaust elbows	1985 - 2001	0B525982 - 0M299999	93322A12(1)(2)(7)	(6)	14801A 1(3)
MCM V-8 (305 & 350 cid)	Stainless steel exhaust elbows	1991 - 1997	0D445800 - 0K999999	807477A 5(1)(2)(7)	(6)	14801A 1(3)
MCM V-8 (305 & 350 cid)	Carb engines	2002	0M300000 - 0M599999	93322A12(7)	(6)	14801A 1(3)
MCM V-8 (305 & 350 cid)	Carb engines with standard cooling	2002	0M600000 - 0M614999	864908A07(7)	(6)	14801A 1(3)
MCM V-8 (305 & 350 cid)	Carb engines with standard cooling	2002 - 2004	0M615000 - 0W309999	864908A 1(7)	(6)	14801A 1(3)
MCM V-8 (305 & 350 cid)	Carb engines with standard cooling	2004 - 2016	0W310000 and up	864908A 1(7)	(6)	866005A01(3)
MCM V-8 (305 & 350 cid)	Carb engines with closed cooling	2002	0M600000 - 0M614999	864908A06(7)	32-865039A 1	14801A 1(3)
MCM V-8 (305 & 350 cid)	Carb engines with closed cooling	2002 - 2004	0M615000 - 0W309999	864908A 2(7)	32-865039A 1	14801A 1(3)
MCM V-8 (305 & 350 cid)	Carb engines with closed cooling	2004 - 2016	OW310000 and up	864908A 2(7)	32-865039A 1	866005A01(3)
MCM V-8 (305, 350 & 377 cid)	MPI engines	2002	0M300000 - 0M599999	93322A10(7)	(6)	14801A 1(3)
MCM V-8 (305, 350 & 377 cid)	MPI engines with standard cooling	2002	0M600000 - 0M614999	864908A07(7)	(6)	14801A 1(3)
MCM V-8 (305, 350 & 377 cid)	MPI engines w/ standard cooling (1 & 3 point drain	2002 - 2004	0M615000 - 0W309999	864908A 1(7)	32-865033A 1	14801A 1(3)
MCM V-8 (305, 350 & 377 cid)	MPI engines w/ standard cooling (1 & 3 point drain	2004 - 2016	0W310000 and up	864908A 1(7)	32-865033A 1	866005A01(3)
MCM V-8 (305, 350 & 377 cid)	MPI engines with standard cooling (7 point drain)	2002 - 2004	0M615000 - 0W309999	864908A 1(7)	(6)	14801A 1(3)
MCM V-8 (305, 350 & 377 cid)	MPI engines with standard cooling (7 point drain)	2004 - 2016	0W310000 and up	864908A 1(7)	(6)	866005A01(3)
MCM V-8 (305, 350 & 377 cid)	MPI engines with closed cooling	2002	0M600000 - 0M614999	864908A06(7)(8)	(6)	14801A 1(3)
MCM V-8 (305, 350 & 377 cid)	MPI engines with closed cooling	2002 - 2004	0M615000 - 0W309999	864908A 2(7)	32-865039A 1	14801A 1(3)
MCM V-8 (305, 350 & 377 cid)	MPI engines with closed cooling	2004 - 2016	0W310000 and up	864908A 2(7)	32-865039A 1	866005A01(3)
MCM V-8 (454 cid)	TR/TRS drive	1982 - 1989	6083145 and up	93322A12(1)(2)	(6)	N.L.A.
MCM V-8 (454 or 502 cid)	Cast iron exhaust elbows	1981 - 2002	5889914 and up	93322A12(1)(2)(7)	(6)	807963A 1(3)
MCM V-8 (454 or 502 cid)	Stainless steel exhaust elbows	1991 - 1997	0D445800 - 0K999999	807477A 5(1)(2)(7)	(6)	807963A 1(3)
	MIE INBOARD MODELS					
MIE V-8 (305 & 350 cid)		1981 - 1988	5907058 - 0C396832	93322A12(1)(2)	(6)	(6)
MIE V-8 (350 cid)		1989 - 2001	0C396833 - 0M299999	93322A12(1)(2)	(6)	(6)
MIE V-8 (350 cid)	Carb engines	2002	0M300000 - 0M316999	93322A12	(6)	(6)
MIE V-8 (350 cid)	Carb engines with standard cooling	2002	0M317000 - 0M389999	864908A07	(6)	(6)
MIE V-8 (350 cid)	Carb engines with standard cooling (in-line)	2002 - 2016	0M390000 and up	864908A 1	(6)	(6)
MIE V-8 (350 cid)	Carb engines with standard cooling (V-drive)	2002 - 2016	0M390000 and up	864908A 1(7)	32-865043A 1	(6)
MIE V-8 (350 cid)	Carb engines with closed cooling	2002	0M317000 - 0M389999	864908A06(7)	32-865039A 1	(6)

Engine Model	Model Note	Year Range	Serial # Range	6 in.(152 mm) Riser Kit	Hose Kit	Intermediate Elbow Kit
MIE V-8 (350 cid)	Carb engines with closed cooling	2002 - 2016	0M390000 and up	864908A 2(7)	32-865039A 1	(6)
MIE V-8 (350 & 377 cid)	MPI engines	2002	0M300000 - 0M316999	93322A10	(6)	(6)
MIE V-8 (350 & 377 cid)	MPI engines with standard cooling	2002	0M317000 - 0M389999	864908A07	(6)	(6)
MIE V-8 (350 & 377 cid)	MPI engines with standard cooling (in-line)	2002 - 2016	0M390000 and up	864908A 1(7)	32-865035A 1	(6)
MIE V-8 (350 & 377 cid)	MPI engines with standard cooling (V-drive)	2002 - 2016	0M390000 and up	864908A 1(7)	N.L.A.	(6)
MIE V-8 (350 & 377 cid)	MPI engines with closed cooling	2002	0M317000 - 0M389999	864908A06(8)	(6)	(6)
MIE V-8 (350 & 377 cid)	MPI engines with closed cooling (in-line)	2002 - 2016	0M390000 and up	864908A 2(7)	32-865039A 1	(6)
MIE V-8 (350 & 377 cid)	MPI engines with closed cooling (V-drive)	2002 - 2016	0M390000 and up	864908A 2(7)	32-865041A 1	(6)
MIE V-8 (454 or 502 cid)	Cast iron exhaust elbows	1981 - 2002	5889914 and up	93322A12(1)(2)	(6)	(6)
MIE V-8 (454 or 502 cid)	Stainless steel exhaust elbows	1991 - 1997	0D445800 - 0K999999	807477A 5(1)(2)	(6)	(6)
	MIE TOW SPORTS MODELS					
SKI V-8 (350 cid)		1985 - 1984	0A338553 - 0B525981	93322A12(1)(2)	(6)	(6)
SKI V-8 (350 & 377cid)		1985 - 2001	0B525982 - 0M299999	93322A12(1)(2)	(6)	(6)
SKI V-8 (350 cid)	Carb engines	2002	0M300000 - 0M316999	93322A12	(6)	(6)
SKI V-8 (350 cid)	Carb engines	2002 - 2016	0M317000 and up	(5)	N/A	N/A
SKI V-8 (350 & 377 cid)	MPI engines	2002	0M300000 - 0M316999	93322A10	(6)	(6)
SKI V-8 (350 & 377 cid)	MPI engines	2002 - 2016	0M317000 and up	(5)	N/A	N/A

(1) If riser is going on a 1997 and older engine, that has the exhaust manifolds in the closed cooling system, also order 2 pcs. of 27-860231 separator gaskets to go between the manifold and risers.

(2) If engine has a remote oil filter, an Oil Filter Hose Extension Kit or Oil Filter Bracket may be required.

(3) Installation Kit is only required on sterndrive engines that have the exhaust going thru the propeller.

(4) Will not fit MCM V-6 engines with the 1 pc exhaust manifold.

(5) No kit available

(6) Kit not required

(7) Additional kit(s) listed are only required upon initial installation of a riser kit. If replacing existing risers, additional kit(s) listed are not required.

(8) If engine had a Quicksilver closed cooling kit installed, it will be necessary to order a warm riser kit, p/n 864908A 2, instead of the one listed. Warm risers will have the water hose fitting located on the upper part of the riser, close to the exhaust e

EXHAUST RISER KITS (GAS, SMALL BLOCK, EMISSIONS CONTROL)

Raises the height of the V-6 & V-8 small block EC engines exhaust system to prevent water from entering the engine through the exhaust system. Maximum height of 8 in.(203 mm). For MCM/MIE 8.1L & 8.2L EC engines see "Exhaust Elbow Riser Kits (8.1L) Emissions Control" section or "Exhaust Elbow Riser Kits (8.2L) Emissions Control" section.

RISER KIT



8M0094680

2 in. (51 mm) for Emissions Control exhaust manifolds.

Fits 2008 and newer MCM/MIE/Ski V-6 (4.3L & 4.5L) & V-8 (305, 350 & 377 cid) EC engines. Also fits 4.5L V-6 & 6.2L (Mercury) non-EC engines.

RISER KIT



8M0094681

4 in. (102 mm) for Emissions Control exhaust manifolds.

Fits 2008 and newer MCM/MIE/Ski V-6 (4.3L & 4.5L) & V-8 (305, 350 & 377 cid) EC engines. Also fits 4.5L V-6 & 6.2L (Mercury) non-EC engines.

RISER KIT



8M0094682

6 in. (152 mm) for Emissions Control exhaust manifolds.
Fits 2008 and newer MCM/MIE/Ski V-6 (4.3L & 4.5L) & V-8 (305, 350 & 377 cid) EC engines. Also fits 4.5L V-6 & 6.2L (Mercury) non-EC engines.

RISER KIT



879288A32

8 in. (203 mm) for Emissions Control exhaust manifolds.
Fits 2008 and newer MCM/MIE V-8 (305, 350 & 377 cid) EC engines.

INTERMEDIATE ELBOW KIT



879288A35

Only required on sterndrive engines that have the exhaust going through the prop.
Fits MCM V-6 (4.3L & 4.5L) & V-8 (305, 350 & 377 cid) EC engines with 2 in. (51 mm) risers. Also fits 4.5L V-6 & 6.2L (Mercury) non-EC engines.

INTERMEDIATE ELBOW KIT



879288A36

Only required on sterndrive engines that have the exhaust going through the prop.
Fits MCM V-6 (4.3L & 4.5L) & V-8 (305, 350 & 377 cid) EC engines with 4 in. (102 mm) risers. Also fits 4.5L V-6 & 6.2L (Mercury) non-EC engines.

INTERMEDIATE ELBOW KIT



879288A37

Only required on sterndrive engines that have the exhaust going through the prop.
Fits MCM V-6 (4.3L & 4.5L) & V-8 (305, 350 & 377 cid) EC engines with 6 in. (152 mm) risers. Also fits 4.5L V-6 & 6.2L (Mercury) non-EC engines.

INTERMEDIATE ELBOW KIT



879288A38

Only required on sterndrive engines that have the exhaust going through the prop.
Fits MCM V-8 (305, 350 & 377 cid) EC engines with 8 in. (203 mm) risers.

HOSE KIT



32-8M0051174

Supplemental hose kit required for closed cooling engines.
Fits 2011 MCM 4.3L MPI EC engines w/ 2 in.(51 mm) risers

HOSE KIT



32-8M0051175

Supplemental hose kit required for closed cooling engines.
Fits 2011 MCM 4.3L MPI EC engines w/ 4 in.(102 mm) risers

HOSE KIT



32-8M0051176

Supplemental hose kit required for closed cooling engines.
Fits 2011 MCM 4.3L MPI EC engines w/ 6 in.(152 mm) risers

HOSE KIT



8M0096701

Supplemental hose kit required for standard cooling engines.
Fits 2014 MCM & 4.5L V6 EC & non-EC engines w/ 6 in.(152 mm) risers

HOSE KIT



8M0089504

Supplemental hose kit required for closed cooling engines.
Fits 2014 MCM & up 4.5L V6 EC & non-EC engines w/ 6 in.(152 mm) risers

EXHAUST ELBOW RISER KITS (8.1L) EMISSIONS CONTROL

Raises the height of the engines exhaust system to prevent water from entering the engine through the exhaust system. Maximum height of 8 in.(203 mm) available. For use on MCM/MIE 8.1L Emissions Control engines only.

EXHAUST ELBOW KIT



8M0062051

This elbow is 2 in.(51 mm) higher than the standard elbow.
Fits MCM/MIE 8.2L EC engines with three catalyst exhaust manifolds (s/n 1A350802-2A041664)

EXHAUST ELBOW KIT



879288T82

Design II
This elbow is 4 in.(102 mm) higher than the standard elbow.
Fits MCM 8.2L EC engines with three catalyst exhaust manifolds (s/n 1A350340-2A41664); also fits MCM/MIE 8.1L EC engines

EXHAUST ELBOW KIT



879288T83

Design II
This elbow is 6 in.(152 mm) higher than the standard elbow.
Fits MCM 8.2L EC engines with three catalyst exhaust manifolds (s/n 1A350340-2A41664); also fits MCM/MIE 8.1L EC engines

EXHAUST ELBOW KIT



879288T84

Design II
This elbow is 8 in.(203 mm) higher than the standard elbow.

Fits MCM 8.2L EC engines with three catalyst exhaust manifolds (s/n 1A350340-2A41664); also fits MCM/MIE 8.1L EC engines

EXHAUST "Y" PIPE KIT



807130A21

Used to convert MCM 8.1L & 8.2L engines with thru transom exhaust to thru prop exhaust.
Also requires the use of intermediate elbow kit in conjunction with this "Y" Pipe Kit. For 8.1L & 8.2L non-Emissions Control engines, use 44267A02 or A03. For 8.1L Emissions Control engines, use 44267A04, A05, A06, A07 or A08. For 8.2L Emissions Control engines with three catalyst exhaust manifolds, use 879288A12, A13, A14, A15 or A16.

Fits all MCM 8.1L & 8.2L sterndrive engines, except 2012 & newer 8.2L EC engines with single catalyst exhaust manifolds.

INTERMEDIATE ELBOW KIT



44267A04

Used in conjunction with Exhaust "Y" Pipe kit 807130A21 to convert engine to thru prop exhaust.

Fits MCM 8.1L EC engines with standard 0" risers.

INTERMEDIATE ELBOW KIT



44267A05

Used in conjunction with Exhaust "Y" Pipe kit 807130A21 to convert engine to thru prop exhaust.

Fits MCM 8.1L EC engines with 2 in. (51 mm) risers.

INTERMEDIATE ELBOW KIT



44267A06

Used in conjunction with Exhaust "Y" Pipe kit 807130A21 to convert engine to thru prop exhaust.

Fits MCM 8.1L EC engines with 4 in. (102 mm) risers.

INTERMEDIATE ELBOW KIT



44267A07

Used in conjunction with Exhaust "Y" Pipe kit 807130A21 to convert engine to thru prop exhaust.

Fits MCM 8.1L EC engines with 6 in. (152 mm) risers.

INTERMEDIATE ELBOW KIT



44267A08

Used in conjunction with Exhaust "Y" Pipe kit 807130A21 to convert engine to thru prop exhaust.

Fits MCM 8.1L EC engines with 8 in. (203 mm) risers.

EXHAUST ELBOW RISER KITS (8.2L) EMISSIONS CONTROL

Raises the height of the engines exhaust system to prevent water from entering the engine through the exhaust system. Maximum height of 8 in.(203 mm) available. For use on MCM/MIE 8.2L Emissions Control engines only.

EXHAUST ELBOW KIT



8M0057574

2 in.(51 mm) riser height

Fits 2012 & newer MCM/MIE 8.2L Emissions Control engines with single catalyst exhaust manifolds (s/n 2A041665 and up)

EXHAUST ELBOW KIT



8M0057575

4 in.(102 mm) riser height

Fits 2012 & newer MCM/MIE 8.2L Emissions Control engines with single catalyst exhaust manifolds (s/n 2A041665 and up)

EXHAUST ELBOW KIT



8M0057576

6 in.(152 mm) rider height

Fits 2012 & newer MCM/MIE 8.2L Emissions Control engines with single catalyst exhaust manifolds (s/n 2A041665 and up)

INTERMEDIATE ELBOW KIT



8M0095832

Required when changing exhaust elbow height to 2 in. (51 mm) risers.

Fits 2012 & newer MCM 8.2L EC engines with single catalyst exhaust manifolds and 2 in. (51 mm) risers (s/n 2A041665 and up)

INTERMEDIATE ELBOW KIT



8M0095833

Required when changing exhaust elbow height to 4 in. (102 mm) risers.

Fits 2012 & newer MCM 8.2L EC engines with single catalyst exhaust manifolds and 4 in. (102 mm) risers (s/n 2A041665 and up)

INTERMEDIATE ELBOW KIT



8M0095834

Required when changing exhaust elbow height to 6 in. (152 mm) risers.

Fits 2012 & newer MCM 8.2L EC engines with single catalyst exhaust manifolds and 6 in. (152 mm) risers (s/n 2A041665 and up)

EXHAUST ELBOW KIT



8M0062051

This elbow is 2 in.(51 mm) higher than the standard elbow.

Fits MCM/MIE 8.2L EC engines with three catalyst exhaust manifolds (s/n 1A350802-2A041664)

EXHAUST ELBOW KIT



879288T82

Design II
This elbow is 4 in.(102 mm) higher than the standard elbow.
Fits MCM 8.2L EC engines with three catalyst exhaust manifolds (s/n 1A350340-2A41664); also fits MCM/MIE 8.1L EC engines

EXHAUST ELBOW KIT



879288T83

Design II
This elbow is 6 in.(152 mm) higher than the standard elbow.
Fits MCM 8.2L EC engines with three catalyst exhaust manifolds (s/n 1A350340-2A41664); also fits MCM/MIE 8.1L EC engines

EXHAUST ELBOW KIT



879288T84

Design II
This elbow is 8 in.(203 mm) higher than the standard elbow.
Fits MCM 8.2L EC engines with three catalyst exhaust manifolds (s/n 1A350340-2A41664); also fits MCM/MIE 8.1L EC engines

EXHAUST ELBOW KIT



8M0062051

This elbow is 2 in.(51 mm) higher than the standard elbow.
Fits MCM/MIE 8.2L EC engines with three catalyst exhaust manifolds (s/n 1A350802-2A041664)

EXHAUST ELBOW KIT



8M0062052

This elbow is 4 in.(102 mm) higher than the standard elbow.
Fits MIE 8.2L EC engines with three catalyst exhaust manifolds (s/n 1A350802-2A041664)

EXHAUST ELBOW KIT



8M0062053

This elbow is 6 in.(152 mm) higher than the standard elbow.
Fits MIE 8.2L EC engines with three catalyst exhaust manifolds (s/n 1A350802-2A041664)

EXHAUST ELBOW KIT



8M0062054

This elbow is 8 in.(203 mm) higher than the standard elbow.
Fits MIE 8.2L EC engines with three catalyst exhaust manifolds (s/n 1A350802-2A041664)

INTERMEDIATE ELBOW KIT



879288A13

Used in conjunction with Exhaust "Y" Pipe Kit 807130A21 to convert engine to thru prop exhaust.
Fits 2010-2012 MCM 8.2L EC engines with three catalyst exhaust manifolds and 2 in. (51 mm) risers (s/n 2A041664 and below)

INTERMEDIATE ELBOW KIT



879288A14

Used in conjunction with Exhaust "Y" Pipe Kit 807130A21 to convert engine to thru prop exhaust.

Fits 2010-2012 MCM 8.2L EC engines with three catalyst exhaust manifolds and 4 in. (102 mm) risers (s/n 2A041664 and below)

INTERMEDIATE ELBOW KIT



879288A15

Used in conjunction with Exhaust "Y" Pipe Kit 807130A21 to convert engine to thru prop exhaust.

Fits 2010-2012 MCM 8.2L EC engines with three catalyst exhaust manifolds and 6 in. (152 mm) risers (s/n 2A041664 and below)

INTERMEDIATE ELBOW KIT



879288A16

Used in conjunction with Exhaust "Y" Pipe Kit 807130A21 to convert engine to thru prop exhaust.

Fits 2010-1212 MCM 8.2L EC engines with three catalyst exhaust manifolds and 8 in. (203 mm) risers (s/n 2A041664 and below)

EXHAUST "Y" PIPE KIT



807130A21

Used to convert MCM 8.1L & 8.2L engines with thru transom exhaust to thru prop exhaust.

Also requires the use of intermediate elbow kit in conjunction with this "Y" Pipe Kit. For 8.1L & 8.2L non-Emissions Control engines, use 44267A02 or A03. For 8.1L Emissions Control engines, use 44267A04, A05, A06, A07 or A08. For 8.2L Emissions Control engines with three catalyst exhaust manifolds, use 879288A12, A13, A14, A15 or A16.

Fits all MCM 8.1L & 8.2L sterndrive engines, except 2012 & newer 8.2L EC engines with single catalyst exhaust manifolds.

EXHAUST RISER CHART - GAS, EMISSIONS CONTROL ENGINES

Exhaust Risers (Gas, Emissions Control engines)

Engine Model	Model Note	Year Range	Serial # Range	Riser Kit	Riser Height	Intermediate Elbow Kit	Hose Kit
MCM 4.3 EC	MPI engines	2011 - 2016	1A637496 and up	8M0094680	2 in. (51 mm)	879288A35(1)	32-8M0051174(4)
MCM 4.3L EC	MPI engines	2011 - 2016	1A637496 and up	879288A28	4 in. (102 mm)	879288A36(1)	32-8M0051175(4)
MCM 4.3L EC	MPI engines	2011 - 2011	1A637496 and up	8M0094682	6 in. (152 mm)	879288A37(1)	32-8M0051176(4)
MCM 4.5L MPI	EC & Non-EC	2014 - 2016	2A441953 and up	8M0094680	2 in. (51 mm)	879288A35(1)	N/A

Engine Model	Model Note	Year Range	Serial # Range	Riser Kit	Riser Height	Intermediate Elbow Kit	Hose Kit
MCM 4.5L MPI	EC & Non-EC	2014 - 2016	2A441953 and up	8M0094681	4 in. (102 mm)	879288A36(1)	N/A
MCM 4.5L MPI	EC & Non-EC w/ standard cooling	2014 - 2016	2A441953 and up	8M0094682	6 in. (152 mm)	879288A37(1)	8M0096701(5)
MCM 4.5L MPI	EC & Non-EC w/ closed cooling	2014 - 2016	2A441953 and up	8M0094682	6 in. (152 mm)	879288A37(1)	8M0089504(6)
MCM/MIE V-8 (305, 350 & 377 cid)	MPI engines	2008 - 2016	1A300000 and up	8M0094680	2 in. (51 mm)	879288A35(1)	N/A
MCM/MIE V-8 (305, 350 & 377 cid)	MPI engines	2008 - 2016	1A300000 and up	879288A28	4 in. (102 mm)	879288A36(1)	N/A
MCM/MIE V-8 (305, 350 & 377 cid)	MPI engines	2008 - 2016	1A300000 and up	8M0094682(2)(3)	6 in. (152 mm)	879288A37(1)	N/A
MCM/MIE V-8 (305, 350 & 377 cid)	MPI engines	2008 - 2016	1A300000 and up	879288A32(2)(3)	8 in. (203 mm)	879288A38(1)	N/A
MCM/MIE/Tow Sports 6.2L MPI	EC & Non-EC	2015 - 2016	2A456613 and up	8M0104209	2 in. (51 mm)	879288A35(1)	N/A
MCM/MIE/Tow Sports 6.2L MPI	EC & Non-EC	2015 - 2016	2A456613 and up	8M0104210	4 in. (102 mm)	879288A36(1)	N/A
MCM/MIE/Tow Sports 6.2L MPI	EC & Non-EC	2015 - 2016	2A456613 and up	8M0104211	6 in. (152 mm)	879288A37(1)	N/A
MIE Tow Sports V-8 (350 & 377 cid)	MPI engines with standard cooling	2008 - 2016	1A090000 and up	8M0094680	2 in. (51 mm)	N/A	N/A
MCM/MIE V-8 (496 cid)	MPI engines	2008 - 2016	1A066166 and up	8M0062051	2 in. (52 mm)	44267A05(1)	N/A
MCM/MIE V-8 (496 cid)	MPI engines	2008 - 2016	1A066166 and up	879288T82	4in. (102 mm)	44267A06(1)	N/A
MCM/MIE V-8 (496 cid)	MPI engines	2008 - 2016	1A066166 and up	879288T83	6 in. (152 mm)	44267A07(1)	N/A
MCM/MIE V-8 (496 cid)	MPI engines	2008 - 2016	1A066166 and up	879288T84	8 in. (203 mm)	44267A08(1)	N/A
MCM/MIE V-8 (502 cid)	MPI engines with 3 catalyst exhaust manifolds	2010 - 2016	1A350340 - 2A041664	8M0062051	2 in. (52 mm)	879288A13(1)	N/A
MCM/MIE V-8 (502 cid)	MPI engines with 3 catalyst exhaust manifolds	2010 - 2016	1A350340 - 2A041664	879288T82	4 in. (102 mm)	879288A14(1)	N/A
MCM/MIE V-8 (502 cid)	MPI engines with 3 catalyst exhaust manifolds	2010 - 2016	1A350340 - 2A041664	879288T83	6 in. (152 mm)	879288A15(1)	N/A
MCM/MIE V-8 (502 cid)	MPI engines with 3 catalyst exhaust manifolds	2010 - 2016	1A350340 - 2A041664	879288T84	8 in. (203 mm)	879288A16(1)	N/A
MCM/MIE V-8 (502 cid)	MPI engines with single catalyst exhaust manifolds	2012 - 2016	2A041665 and up	8M0057574	2 in. (52 mm)	8M0095832(1)	N/A
MCM/MIE V-8 (502 cid)	MPI engines with single catalyst exhaust manifolds	2012 - 2016	2A041665 and up	8M0057575	4 in. (102 mm)	8M0095833(1)	N/A
MCM/MIE V-8 (502 cid)	MPI engines with single catalyst exhaust manifolds	2012 - 2016	2A041665 and up	8M0057576	6 in. (152 mm)	8M0095834(1)	N/A

(1) Only required on sterndrive engines that have the exhaust going thru the prop.

(2) Order Poppet Valve Kit 879288A26 if converting a closed cooled MCM engine having 0 in., 2 in. or 4 in. risers.

(3) Order Poppet Valve Kit 879288A27 if converting a closed cooled MIE engine having 0 in., 2 in. or 4 in. risers.

(4) Hose kit required only if closed cooled engine

(5) Use on standard cooling engines

(6) Use on closed cooling engines

EXHAUST MANIFOLD FITTINGS

EXHAUST MANIFOLD DRAIN ELBOW



22-862210A01

Stainless steel with drain

Fits MCM/MIE V-6 & V-8 engines with center rise exhaust manifolds.

EXHAUST MANIFOLD ELBOW



22- 36305T

Brass material without drain

Use on big block V-8 engines that have the exhaust manifolds in the closed cooling system.

CARBURETOR WEDGE KIT

CARBURETOR WEDGE KIT



879288T62

Helps eliminate carburetor lean out condition in extremely hard right turns.
Fits MCM 3.0L engines (1998 and newer)

COOL FUEL RELOCATION KITS

These kits are for engines that need the cool fuel system relocated to the front of the engine due to interference with engine plate mounts or other components.

COOL FUEL RELOCATION KIT



861637A 2

For 1998-2001 MCM 454/502 MPI engines with MEFI 3 ignition (s/n 0L085400-0M024999).

CLOSED COOLING KITS

Some engine models will require a closed cooling kit, a belt kit, and a seawater pump kit. Other models will not require all these kits. A note indicates that there might be a different kit that is required to make the kits fit the engine on which the closed cooling is being installed. N/A = Not Applicable.

CLOSED COOLING KIT

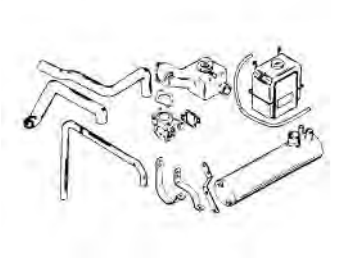

61086A11

Side mounted kit.
This kit fits front mount engines only.
Fits MCM 120, 140, 2.5L & 3.0L/LX (1983 & newer)

CLOSED COOLING KIT



879288A02

Side mounted kit.
Fits 2008 and newer MCM 3.0 MPI Emissions Control engine.

CLOSED COOLING KIT

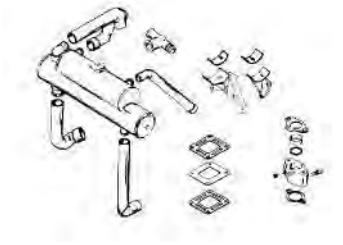

860427A 4

Front mounted kit.
Fits MCM V-6 & V-8 (350 cid) engines w/ serpentine belt.

864920A02

Front mounted kit. Full closed system which also protects the dry joint exhaust manifolds from corrosion.
Fits 2002 and newer MCM V-6 & V-8 (305, 350 & 377) MPI engines (s/n 0M600000 and up).
Fits 2002 and newer MIE V-8 (350 cid) MPI engines (s/n 0M317000 and up). See application chart.

CLOSED COOLING KIT



8M0080795

Front mounted kit.
Fits 2005 & newer MCM V-6 TKS engines (s/n 0W310000 and up). See application chart.

CLOSED COOLING KIT

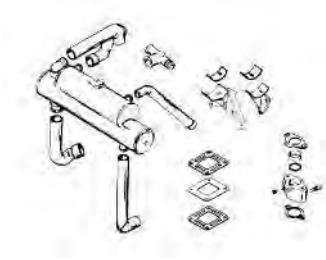

8M0051178

Front mounted kit. Full closed system which also protects the dry joint exhaust manifolds from corrosion.

Fits 2011 MCM 4.3L MPI Emissions Control engines.

CLOSED COOLING KIT

Image not Available.

8M0089499

Front mounted kit. Full closed system which also protects the exhaust manifolds from corrosion. NEW

Fits 2014 & newer MCM 4.5L MPI engines

CLOSED COOLING KIT

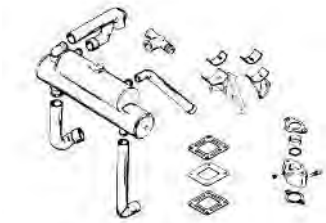

860427A 5

Front mounted kit.

Fits 1997-1999 MCM V-8 (305 & 350 cid) engines (s/n 0K001501-0L618999).
Fits 1997-2001 MIE & Tow Sports V-8 (350 & 377 cid) Gen+ engines (s/n 0K040006-0M299999)
Fits 2001-2002 MIE & Tow Sports V-8 (350 cid) carb engines (s/n 0M300000-0M316999). See application chart.

860427A 7

Front mounted kit.

Fits 1999-2001 MCM V-8 (305, 350 & 377 cid) engines (s/n 0L619000-0M299999).
Fits 2001-2002 MCM V-8 (305, 350 & 377 cid) Carb engines (s/n 0M300000-0M590000). See application chart.

CLOSED COOLING KIT



879288A39

Front mounted kit. Full closed system which also protects the dry joint exhaust manifolds from corrosion.

Fits 2008 and newer MCM/MIE V-8 (305, 350 & 377) MPI Emissions Control engines.

CLOSED COOLING KIT



807639A 3

Front mounted kit.

Fits 1996-2001 MCM & MIE V-8 (454 & 502 cid) engines. See application chart.

SERPENTINE BELT & PULLEY KIT



889432A 1

Fits 2002-2003 MCM V-6 & V-8 (305 & 350 cid) Alpha engines with standard cooling that the power steering pump is being removed (s/n 0M343008-0M999999).

SERPENTINE BELT & PULLEY KIT



889433A 1

Fits 2002-2003 MCM V-6 & V-8 (305, 350 & 377 cid) Alpha engines with closed cooling and Bravo engines that the power steering pump is being removed (s/n 0M343008-0M999999).

SERPENTINE BELT KIT



807901T 6

Fits MCM 4.3L Alpha. See application chart for specific engine models.

SERPENTINE BELT KIT



807901A 4

For dual engine applications where power steering pump is being removed.

Fits MCM V-6 & V-8 (305 & 350 cid) Alpha engines with standard cooling. Also fits MCM 4.3L Alpha with closed cooling. See application chart for specific engine models.

807901A 5

Fits MCM 4.3L Bravo; 5.0L & 5.7L Alpha/Bravo. See application chart for specific engine models.

807901A 3

For dual engine applications where power steering pump is being removed.

Fits MCM V-6 & V-8 (305 & 350 cid) Bravo engines with standard cooling. Also fits MCM 4.3L Bravo; 5.0L & 5.7L Alpha/Bravo with closed cooling. See application chart for specific engine models.

SERPENTINE BELT

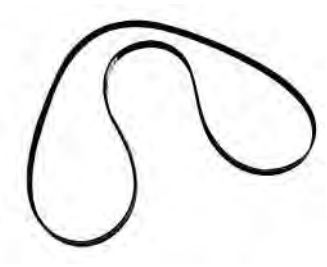

57-865615Q03

2704 mm length

Fits 2001 and newer MCM V-6 & V-8 (305, 350 & 377 cid) Alpha engines with closed cooling and Bravo engines with standard cooling (s/n 0M320025 and above)

57-865615Q09

1780 mm length

Fits 1999-2001 MCM V-6 & V-8 (305 & 350 cid) Alpha engines with high mounted alternator (s/n 0L619000-0M320024)

57-865615Q08

2535 mm length

Fits 1999-2002 MCM V-6 & V-8 (305, 350 & 377 cid) Bravo engines with high mounted alternator that the power steering pump is being removed (s/n 0L619000-0M343007).

57-865615Q07

2467 mm length

Fits 1998-2001 MCM V-8 (454 & 502 cid) Bravo engines with serpentine belt that the power steering pump is being removed.

SEAWATER PUMP KIT



46-8M0063542

Fits MCM 4.3L EC Alpha engines. Used in conjunction with closed. See closed cooling kit application chart.

SEAWATER PUMP KIT

Image not Available.

8M0089498

Fits MCM 4.5L MPI Alpha engines. Used in conjuction with Closed Cooling Kit p/n 8M0089499

NEW

REAR COVER ASSEMBLY



863674A05

Brass housing with stainless steel wear plate

Fits current small block brass seawater pump w/ air fittings

SEAWATER PUMP KIT



46-807151A 5

Fits MCM V-8 (305 & 350 cid) Alpha engines. See application chart.

SEAWATER PUMP KIT



46-807151A25

Fits 1999-2001 MCM V-8 (305 & 350 cid) Alpha engines (s/n 0L619000-0M299999). See application chart.

SEAWATER PUMP KIT



46-862914A06

Fits 2001 and newer MCM V-6 & V-8 (305 & 350 cid) Alpha engines (s/n 0M300000 and up). Use only in conjunction with closed cooling kit. See closed cooling application chart.

HOSE EXTENDER KIT



860315A 1

Required if seawater hose is routed across the intake manifold.

Fits MCM 4.3L Alpha/Bravo & 5.0L Alpha. See application chart.

FUEL LINE KIT



32-861070T

Fits MCM 5.7L Alpha/Bravo. See application chart.

HOSE KIT



32-879172A16

Supplemental hose kit used in conjuction with main closed cooling kit 879288A39.

Fits 2008 and newer MCM & MIE in-line V-8 (305, 350 & 377 cid) MPI Emissions Control engines

HOSE KIT



32-879172A17

Supplemental hose kit used in conjuction with main closed cooling kit 879288A39.

Fits 2008 and newer MIE V-drive V-8 (305, 350 & 377 cid) MPI Emissions Control engines

HOSE KIT



32-865039A02

Supplemental hose kit used in conjuction with main closed cooling kit 879288A39.

Fits 2008 and newer MCM Axius V-8 (305, 350 & 377 cid) MPI Emissions Control engines

RISER HOSE KIT



32-865039A 1

Used in conjunction with 4.7 in. (119 mm) & 6 in. (152 mm) exhaust risers & CLOSED COOLING

Fits 2002 and newer MCM V-8 (305, 350 & 377 cid) MPI engines (s/n 0M615000 and up) & MIE V-8 (350 & 377 cid) MPI engines with in-line transmission (s/n 0M390000 and up).

RISER HOSE KIT



32-865090A01

Fits MCM V-6 MPI engines (s/n 0M600000 and up).

RISER HOSE KIT



32-865998A01

Used in conjunction with 4.7 in. (119 mm) & 6 in. (152 mm) exhaust risers & CLOSED COOLING

Fits 2004 and newer MCM 4.3L MPI engines (s/n 0W310000 and up).

RISER HOSE KIT



32-8M0082066

Used in conjunction with 4.7 in. (119 mm) & 6 in. (152 mm) exhaust risers & CLOSED COOLING

Fits 2005 and newer MCM 4.3L TKS engines (s/n 0W310000 and up).

HOSE KIT



32-8M0051174

Supplemental hose kit required for closed cooling engines.

Fits 2011 MCM 4.3L MPI EC engines w/ 2 in.(51 mm) risers

HOSE KIT



32-8M0051175

Supplemental hose kit required for closed cooling engines.

Fits 2011 MCM 4.3L MPI EC engines w/ 4 in.(102 mm) risers

HOSE KIT



32-8M0051176

Supplemental hose kit required for closed cooling engines.

Fits 2011 MCM 4.3L MPI EC engines w/ 6 in.(152 mm) risers

BRACKET



865188T01

Replacement bracket required for specific engine applications when adding closed cooling.

Fits MCM V-8 (305, 350 & 377 cid) MPI engines (s/n 0M600000-0M616622).

CLOSED COOLING KIT CHART (DRY JOINT EXHAUST)

When adding a closed cooling kit to an engine with 6 in. (152 mm) cold exhaust risers, it will be necessary to replace the exhaust risers with 6 in. (152 mm) warm exhaust risers (p/n 864908A 2). The difference between cold & warm exhaust risers can be identified by the location of the riser hose fitting. Cold exhaust risers will have the hose fitting toward the lower part of the exhaust riser close to the exhaust manifold. Warm exhaust risers will have the hose fitting toward the upper part of the exhaust riser close to the exhaust elbow.

Closed Cooling Kits (2002 and newer)

Engine Model	Year Range	Serial # Range	Closed Cooling Kit	Seawater Pump Kit	ECM	Hose Kit
MERCRUISER STERNDRIVE MODELS (MCM)						
MCM 3.0L	2002 - 2016	0M087452 and up	61086A11(2)	N/A	N/A	N/A
MCM 3.0L MPI EC	2008 - 2011	1A072812 - 1A648622	879288A02	N/A	8M0049841(4)	N/A
MCM 3.0L MPI EC	2011 - 2016	1A648623 and up	879288A02	N/A	78-8M0059346(4)	N/A
MCM 4.3L	2002 - 2016	0M600000 - 0W309999	(1)	N/A	N/A	N/A
MCM 4.3L	2005 - 2016	0W310000 and up	8M0080795	N/A	N/A	32-8M0082066(18)
MCM 4.3L MPI Alpha	2002 - 2006	0M600000 - 0W649999	864920A02(5)(7)(16)	46-862914A06(6)	865831T07(4)	32-865090A01(11)
MCM 4.3L MPI Alpha	2006 - 2007	0W650000 - 1A063239	864920A02(5)(16)	46-862914A06(6)	865831T06(4)	32-865090A01(11)
MCM 4.3L MPI Alpha	2007 - 2008	1A063240 - 1A343327	864920A02(5)(16)	46-862914A06(6)	865831T08(4)	32-865090A01(11)
MCM 4.3L MPI Alpha	2009 - 2016	1A343328 and up	864920A02(5)(16)	46-862914A06(6)	8M0064760(4)	32-865090A01(11)
MCM 4.3L 175 MPI Alpha	2015 - 2016	2A and up	(1)	N/A	N/A	N/A
MCM 4.3L MPI Alpha EC(12)	2011 - 2011	1A634796 - 1A648622	8M0051178(5)(13)	46-8M0063542(6)	8M0054004(4)	(15)
MCM 4.3L MPI Alpha EC(12)	2011 - 2016	1A648623 and up	8M0051178(5)(13)	46-8M0063542(6)	78-8M0059348(4)	(15)
MCM 4.3L 175 MPI Alpha EC(12)	2015 - 2016	2A and up	(1)	N/A	N/A	N/A
MCM 4.3L MPI Bravo	2002 - 2004	0M600000 - 0W029410	864920A02(5)(9)	N/A	865001T01(4)	32-865090A01(11)
MCM 4.3L MPI Bravo	2004 - 2006	0W029411 - 0W649999	864920A02(5)(9)	N/A	865833T06(4)	32-865090A01(11)
MCM 4.3L MPI Bravo	2006 - 2007	0W650000 - 1A063239	864920A02(5)(9)	N/A	865833T05(4)	32-865090A01(11)
MCM 4.3L MPI Bravo	2007 - 2008	1A063240 - 1A343327	864920A02(5)(9)	N/A	865833T07(4)	32-865090A01(11)
MCM 4.3L MPI Bravo	2009 - 2016	1A343328 and up	864920A02(5)(9)	N/A	8M0064759(4)	32-865090A01(11)
MCM 4.3L MPI Bravo EC(12)	2011 - 2011	1A637496 - 1A648622	8M0051178(5)	863674A05(17)	8M0054006(4)	(15)
MCM 4.3L MPI Bravo EC(12)	2011 - 2016	1A648623 and up	8M0051178(5)	863674A05(17)	78-8M0059350(4)	(15)
MCM 4.5L MPI Alpha	2014 - 2016	2A441953 and up	8M0089499(5)	8M0089498(6)(19)	N/A	N/A
MCM 4.5L MPI Bravo	2014 - 2016	2A441953 and up	8M0089499	N/A	N/A	N/A
MCM 5.0L Alpha	2002 - 2009	0M600000 and up	N.L.A.(5)	46-862914A06(6)	N/A	32-865039A 1(8)
MCM 5.0L Bravo	2002 - 2009	0M600000 and up	N.L.A.(5)(9)	N/A	N/A	32-865039A 1(8)
MCM 5.0L MPI Alpha	2002 - 2004	0M600000 - 0W029410	864920A02(5)(7)	46-862914A06(6)	865835T03(4)	32-865039A 1(8)
MCM 5.0L MPI Alpha	2004	0W029411 - 0W309999	864920A02(5)	46-862914A06(6)	865835T03(4)	32-865039A 1(8)
MCM 5.0L MPI Alpha	2004 - 2006	0W310000 - 0W649999	864920A02(5)	46-862914A06(6)	866190T06(4)	32-865039A 1(8)
MCM 5.0L MPI Alpha	2006 - 2008	0W650000 - 1A343327	864920A02(5)	46-862914A06(6)	866190T07(4)	32-865039A 1(8)
MCM 5.0L MPI Alpha	2009 - 2016	1A343328 and up	864920A02(5)	46-862914A06(6)	879194T83(4)	32-865039A 1(8)
MCM 5.0L MPI Alpha EC(12)	2008 - 2011	1A300000 - 1A648622	879288A39(5)	46-862914A06(6)	8M0071875(4)	32-879172A16
MCM 5.0L MPI Alpha EC(12)	2011 - 2016	1A648623 and up	879288A39(5)	46-862914A06(6)	78-8M0059352(4)	32-879172A16
MCM 5.0L MPI Bravo	2002 - 2004	0M600000 - 0W029410	864920A02(5)(7)(9)	N/A	865003T03(4)	32-865039A 1(8)
MCM 5.0L MPI Bravo	2004	0W029411 - 0W309999	864920A02(5)(9)	N/A	865837T02(4)	32-865039A 1(8)
MCM 5.0L MPI Bravo	2004 - 2006	0W310000 - 0W649999	864920A02(5)(9)	N/A	866192T06(4)	32-865039A 1(8)
MCM 5.0L MPI Bravo	2006 - 2008	0W650000 - 1A343327	864920A02(5)(9)	N/A	866192T05(4)	32-865039A 1(8)
MCM 5.0L MPI Bravo	2009 - 2016	1A343328 and up	864920A02(5)(9)	N/A	879194T85(4)	32-865039A 1(8)
MCM 5.0L MPI Bravo EC(12)	2008 - 2011	1A300000 - 1A648622	879288A39(5)(9)	N/A	8M0071877(4)	32-879172A16
MCM 5.0L MPI Bravo EC(12)	2011 - 2016	1A648623 and up	879288A39(5)(9)	N/A	78-8M0059354(4)	32-879172A16
MCM 5.0L MPI Bravo DTS	2004 - 2008	0W310000 - 1A343327	864920A02(5)(9)	N/A	866237T04(4)	32-865039A 1(8)
MCM 5.0L MPI Bravo DTS	2009 - 2016	1A343328 and up	864920A02(5)(9)	N/A	78-8M0059270(4)	32-865039A 1(8)

Engine Model	Year Range	Serial # Range	Closed Cooling Kit	Seawater Pump Kit	ECM	Hose Kit
MCM 5.0L MPI Bravo Axius DTS	2008	1A300000 - 1A343327	864920A02(5)(9)	N/A	879172T80(4)	32-865039A 1(8)
MCM 5.0L MPI Bravo Axius DTS	2009 - 2010	1A343328 - 1A623184	864920A02(5)(9)	N/A	879194T99(4)	32-865039A 1(8)
MCM 5.0L MPI Bravo DTS EC(12)	2008 - 2011	1A300000 - 1A648622	879288A39(5)(9)	N/A	8M0071884(4)	32-879172A16
MCM 5.0L MPI Bravo DTS EC(12)	2011 - 2016	1A648623 and up	879288A39(5)(9)	N/A	78-8M0059366(4)	32-879172A16
MCM 5.0L MPI Bravo Axius DTS EC(12)	2008 - 2011	1A300000 - 1A648622	879288A39(5)(9)	N/A	8M0071888(4)	32-879172A16(14)
MCM 5.7L Alpha	2002 - 2009	0M600000 and up	N.L.A.(5)	46-862914A06(6)	N/A	32-865039A 1(8)
MCM 5.7L Bravo	2002 - 2009	0M600000 and up	N.L.A.(5)(9)	N/A	N/A	32-865039A 1(8)
MCM 350 Mag MPI Alpha	2002 - 2004	0M600000 - 0W309999	864920A02(5)(7)	46-862914A06(6)	865839T03(4)	32-865039A 1(8)
MCM 350 Mag MPI Alpha	2004 - 2006	0W310000 - 0W649999	864920A02(5)	46-862914A06(6)	866123T06(4)	32-865039A 1(8)
MCM 350 Mag MPI Alpha	2006 - 2008	0W650000 - 1A343327	864920A02(5)	46-862914A06(6)	866123T05(4)	32-865039A 1(8)
MCM 350 Mag MPI Alpha	2009 - 2016	1A343328 and up	864920A02(5)	46-862914A06(6)	879194T87(4)	32-865039A 1(8)
MCM 350 Mag MPI Alpha EC(12)	2008 - 2011	1A300000 - 1A648622	879288A39(5)	46-862914A06(6)	8M0071878(4)	32-879172A16
MCM 350 Mag MPI Alpha EC(12)	2011 - 2016	1A648623 and up	879288A39(5)	46-862914A06(6)	78-8M0059356(4)	32-879172A16
MCM 350 Mag MPI Bravo	2002 - 2004	0M600000 - 0W029410	864920A02(5)(7)(9)	N/A	865005T03(4)	32-865039A 1(8)
MCM 350 Mag MPI Bravo	2004	0W029411 - 0W309999	864920A02(5)(9)	N/A	865841T02(4)	32-865039A 1(8)
MCM 350 Mag MPI Bravo	2004 - 2006	0W310000 - 0W649999	864920A02(5)(9)	N/A	866125T06(4)	32-865039A 1(8)
MCM 350 Mag MPI Bravo	2006 - 2008	0W650000 - 1A343327	864920A02(5)(9)	N/A	866125T05(4)	32-865039A 1(8)
MCM 350 Mag MPI Bravo	2009 - 2016	1A343328 and up	864920A02(5)(9)	N/A	879194T89(4)	32-865039A 1(8)
MCM 350 Mag MPI Bravo DTS	2004 - 2008	0W310000 - 1A343327	864920A02(5)(9)	N/A	866239T04(4)	32-865039A 1(8)
MCM 350 Mag MPI Bravo DTS	2009 - 2016	1A343328 and up	864920A02(5)(9)	N/A	78-8M0059272(4)	32-865039A 1(8)
MCM 350 Mag MPI Axius Bravo DTS	2008	1A300000 - 1A343327	864920A02(5)(9)	N/A	879288T03(4)	32-865039A 1(8)
MCM 350 Mag MPI Axius Bravo DTS	2009 - 2010	1A343328 - 1A623184	864920A02(5)(9)	N/A	879288T91(4)	32-865039A 1(8)
MCM 350 Mag MPI Bravo EC(12)	2008 - 2011	1A300000 - 1A648622	879288A39(5)(9)	N/A	8M0071880(4)	32-879172A16
MCM 350 Mag MPI Bravo EC(12)	2011 - 2016	1A648623 and up	879288A39(5)(9)	N/A	78-8M0059358(4)	32-879172A16
MCM 350 Mag MPI Bravo DTS EC(12)	2008 - 2011	1A300000 - 1A648622	879288A39(5)(9)	N/A	8M0071885(4)	32-879172A16
MCM 350 Mag MPI Bravo DTS EC(12)	2011 - 2016	1A648623 and up	879288A39(5)(9)	N/A	78-8M0059368(4)	32-879172A16
MCM 350 Mag MPI Bravo Axius DTS EC(12)	2008 - 2011	1A300000 - 1A648622	879288A39(5)(9)	N/A	8M0071889(4)	32-879172A16(14)
MCM 377 Mag MPI Bravo	2008	1A300000 - 1A343327	864920A02(5)(9)	N/A	866130T05(4)	32-865039A 1(8)
MCM 377 Mag MPI Bravo	2009	1A343328 - 1A345479	864920A02(5)(9)	N/A	879194T39(4)	32-865039A 1(8)
MCM 377 Mag MPI Bravo	2009	1A345480 - 1A345492	864920A02(5)(9)	N/A	879288T93(4)	32-865039A 1(8)
MCM 377 Mag MPI Bravo	2009	1A345493 - 1A345765	864920A02(5)(9)	N/A	879194T39(4)	32-865039A 1(8)
MCM 377 Mag MPI Bravo	2009	1A345766 - 1A345767	864920A02(5)(9)	N/A	879288T93(4)	32-865039A 1(8)
MCM 377 Mag MPI Bravo	2009	1A345768 - 1A346789	864920A02(5)(9)	N/A	879194T39(4)	32-865039A 1(8)
MCM 377 Mag MPI Bravo	2009 - 2016	1A346790 and up	864920A02(5)(9)	N/A	879288T93(4)	32-865039A 1(8)
MCM 377 Mag MPI Bravo DTS	2008	1A300000 - 1A343327	864920A02(5)(9)	N/A	866243T05(4)	32-865039A 1(8)
MCM 377 Mag MPI Bravo DTS	2009	1A343328 - 1A345479	864920A02(5)(9)	N/A	879194T44(4)	32-865039A 1(8)
MCM 377 Mag MPI Bravo DTS	2009	1A345480 - 1A345492	864920A02(5)(9)	N/A	78-8M0059274(4)	32-865039A 1(8)
MCM 377 Mag MPI Bravo DTS	2009	1A345493 - 1A345765	864920A02(5)(9)	N/A	879194T44(4)	32-865039A 1(8)
MCM 377 Mag MPI Bravo DTS	2009	1A345766 - 1A345767	864920A02(5)(9)	N/A	78-8M0059274(4)	32-865039A 1(8)
MCM 377 Mag MPI Bravo DTS	2009	1A345768 - 1A346789	864920A02(5)(9)	N/A	879194T44(4)	32-865039A 1(8)
MCM 377 Mag MPI Bravo DTS	2009 - 2016	1A346790 and up	864920A02(5)(9)	N/A	78-8M0059274(4)	32-865039A 1(8)
MCM 377 Mag MPI Bravo Axius DTS	2008	1A300000 - 1A343327	864920A02(5)(9)	N/A	879194T73(4)	32-865039A 1(8)
MCM 377 Mag MPI Bravo Axius DTS	2009	1A343328 - 1A345479	864920A02(5)(9)	N/A	879355T82(4)	32-865039A 1(8)
MCM 377 Mag MPI Bravo Axius DTS	2009	1A345480 - 1A345492	864920A02(5)(9)	N/A	879194T17(4)	32-865039A 1(8)
MCM 377 Mag MPI Bravo Axius DTS	2009	1A345493 - 1A345765	864920A02(5)(9)	N/A	879355T82(4)	32-865039A 1(8)
MCM 377 Mag MPI Bravo Axius DTS	2009	1A345766 - 1A345767	864920A02(5)(9)	N/A	879194T17(4)	32-865039A 1(8)
MCM 377 Mag MPI Bravo Axius DTS	2009	1A345768 - 1A346789	864920A02(5)(9)	N/A	879355T82(4)	32-865039A 1(8)
MCM 377 Mag MPI Bravo Axius DTS	2009 - 2010	1A346790 - 1A623184	864920A02(5)(9)	N/A	879194T17(4)	32-865039A 1(8)
MCM 377 Mag MPI Bravo EC(12)	2008 - 2011	1A300000 - 1A648622	879288A39(5)(9)	N/A	8M0052735(4)	32-879172A16
MCM 377 Mag MPI Bravo EC(12)	2011 - 2016	1A648623 and up	879288A39(5)(9)	N/A	78-8M0059363(4)	32-879172A16
MCM 377 Mag MPI Bravo DTS EC(12)	2008 - 2011	1A300000 - 1A648622	879288A39(5)(9)	N/A	8M0052739(4)	32-879172A16
MCM 377 Mag MPI Bravo DTS EC(12)	2011 - 2016	1A648623 and up	879288A39(5)(9)	N/A	78-8M0059257(4)	32-879172A16

Engine Model	Year Range	Serial # Range	Closed Cooling Kit	Seawater Pump Kit	ECM	Hose Kit
MCM 377 Mag MPI Bravo Axius DTS EC(12)	2008 - 2011	1A300000 - 1A623184	879288A39(5)(9)	N/A	8M0071890(4)	32-879172A16(14)
MCM MX 6.2 MPI Bravo	2002 - 2004	0M600000 - 0W029410	864920A02(5)(7)(9)	N/A	865008T04(4)	32-865039A 1(8)
MCM MX 6.2 MPI Bravo	2004	0W029410 - 0W309999	864920A02(5)(9)	N/A	865846T02(4)	32-865039A 1(8)
MCM MX 6.2 MPI Bravo	2004 - 2006	0W310000 - 0W649999	864920A02(5)(9)	N/A	866130T06(4)	32-865039A 1(8)
MCM MX 6.2 MPI Bravo	2006 - 2007	0W650000 - 1A299999	864920A02(5)(9)	N/A	866130T05(4)	32-865039A 1(8)
MCM MX 6.2 MPI Bravo DTS	2004 - 2007	0W310000 - 1A299999	864920A02(5)(9)	N/A	866243T05(4)	32-865039A 1(8)
MERCRUISER INBOARD MODELS (MIE)						
MIE 350 Mag MPI	2002 - 2004	0M317000 - 0W389999	864920A02(5)	N/A	865006T04(4)	32-865039A 1(10)
MIE 350 Mag MPI	2004 - 2006	0W390000 - 0W689999	864920A02(5)	N/A	866127T05(4)	32-865039A 1(10)
MIE 350 Mag MPI	2006 - 2008	0W690000 - 1A089999	864920A02(5)	N/A	866127T04(4)	32-865039A 1(10)
MIE 350 Mag MPI DTS	2004 - 2008	0W390000 - 1A089999	864920A02(5)	N/A	866241T06(4)	32-865039A 1(10)
MIE 5.7L	2002 - 2008	0M317000 and up	N.L.A.(5)	N/A	N/A	32-865039A 1(10)
MIE 5.7L MPI	2008	1A090000 - 1A091825	864920A02(5)	N/A	866127T04(4)	32-865039A 1(10)
MIE 5.7L MPI	2009 - 2016	1A091826 and up	864920A02(5)	N/A	879194T91(4)	32-865039A 1(10)
MIE 5.7L MPI w/ In-Line EC(12)	2008 - 2011	1A090000 - 1A092817	879288A39(5)	N/A	8M0071881(4)	32-879172A16
MIE 5.7L MPI w/ In-Line EC(12)	2011 - 2016	1A092818 and up	879288A39(5)	N/A	78-8M0059360(4)	32-879172A16
MIE 5.7L MPI w/ V-Drive EC(12)	2008 - 2011	1A090000 - 1A092817	879288A39(5)	N/A	8M0071881(4)	32-879172A17
MIE 5.7L MPI w/ V-Drive EC(12)	2011 - 2016	1A092818 and up	879288A39(5)	N/A	78-8M0059360(4)	32-879172A17
MIE 5.7L MPI DTS	2008	1A090000 - 1A091825	864920A02(5)	N/A	866241T06(4)	32-865039A 1(10)
MIE 5.7L MPI DTS	2009 - 2016	1A091826 and up	864920A02(5)	N/A	879194T97(4)	32-865039A 1(10)
MIE 5.7L MPI DTS w/ In-Line EC(12)	2008 - 2011	1A090000 - 1A092817	879288A39(5)	N/A	8M0071886(4)	32-879172A16
MIE 5.7L MPI DTS w/ In-Line EC(12)	2011 - 2016	1A092818 and up	879288A39(5)	N/A	78-8M0059248(4)	32-879172A16
MIE 5.7L MPI DTS w/ V-Drive EC(12)	2008 - 2011	1A090000 - 1A092817	879288A39(5)	N/A	8M0071886(4)	32-879172A17
MIE 5.7L MPI DTS w/ V-Drive EC(12)	2011 - 2016	1A092818 and up	879288A39(5)	N/A	78-8M0059248(4)	32-879172A17
MIE MX 6.2 MPI	2002 - 2004	0M317000 - 0W389999	864920A02(5)	N/A	865009T04(4)	32-865039A 1(10)
MIE MX 6.2 MPI	2004 - 2006	0W390000 - 0W689999	864920A02(5)	N/A	866132T06(4)	32-865039A 1(10)
MIE MX 6.2 MPI	2006 - 2008	0W690000 - 1A091517	864920A02(5)	N/A	866132T05(4)	32-865039A 1(10)
MIE MX 6.2 MPI	2009	1A091518 - 1A091825	864920A02(5)	N/A	879194T41(4)	32-865039A 1(10)
MIE MX 6.2 MPI	2009 - 2016	1A091826 and up	864920A02(5)	N/A	879288T95(4)	32-865039A 1(10)
MIE MX 6.2 MPI DTS	2004 - 2008	0W390000 - 1A091517	864920A02(5)	N/A	866245T06(4)	32-865039A 1(10)
MIE MX 6.2 MPI DTS	2009	1A091518 - 1A091825	864920A02(5)	N/A	879355T80(4)	32-865039A 1(10)
MIE MX 6.2 MPI DTS	2009 - 2016	1A091826 and up	864920A02(5)	N/A	879288T99(4)	32-865039A 1(10)
MIE 6.2 MPI w/ In-Line EC(12)	2008 - 2011	1A090000 - 1A092817	879288A39(5)	N/A	8M0052737(4)	32-879172A16
MIE 6.2 MPI w/ In-Line EC(12)	2011 - 2016	1A092818 and up	879288A39(5)	N/A	78-8M0059364(4)	32-879172A16
MIE 6.2 MPI w/ V-Drive EC(12)	2008 - 2011	1A090000 - 1A092817	879288A39(5)	N/A	8M0052737(4)	32-879172A17
MIE 6.2 MPI w/ V-Drive EC(12)	2011 - 2016	1A092818 and up	879288A39(5)	N/A	78-8M0059364(4)	32-879172A17
MIE 6.2 MPI DTS w/ In-Line EC(12)	2008 - 2011	1A090000 - 1A092817	879288A39(5)	N/A	8M0052742(4)	32-879172A16
MIE 6.2 MPI DTS w/ In-Line EC(12)	2011 - 2016	1A092818 and up	879288A39(5)	N/A	78-8M0059259(4)	32-879172A16
MIE 6.2 MPI DTS w/ V-Drive EC(12)	2008 - 2011	1A090000 - 1A092817	879288A39(5)	N/A	8M0052742(4)	32-879172A17
MIE 6.2 MPI DTS w/ V-Drive EC(12)	2011 - 2016	1A092818 and up	879288A39(5)	N/A	78-8M0059259(4)	32-879172A17
MERCRUISER TOW SPORTS MODELS (SKI)						
Ski 5.7L Carb	2002 - 2016	0M317000 and up	(1)	N/A	N/A	N/A
Ski 350 Mag MPI	2002 - 2016	0M317000 and up	(1)	N/A	N/A	N/A
Ski MX 6.2 MPI	2002 - 2016	0M317000 and up	(1)	N/A	N/A	N/A
Black Scorpion Ski	2002 - 2016	0M317000 and up	(1)	N/A	N/A	N/A

Engine Model	Year Range	Serial # Range	Closed Cooling Kit	Seawater Pump Kit	ECM	Hose Kit
MX 6.2 Black Scorpion Ski	2002 - 2016	0M317000 and up	(1)	N/A	N/A	N/A

(1) No Kit Available

(2) This closed cooling kit will not fit 3.0L engines with optional side mounts

(4) The ECM must be replaced when installing a closed cooling kit on this specific engine application. Due to the many updates throughout the year, the ECM listed may not be the appropriate ECM for your engine serial number. Please check the latest Electronic Parts Catalog

(5) Note the additional required kit(s) listed to complete the installation.

(6) Thru hull water pickup is not included with seawater pump kits. Obtain locally.

(7) 865188T01 Front Lift Bracket: Order this replacement bracket if the engine s/n is 0M600000-0M616622 or if a Bravo engine with an air actuated drain system.

(8) This hose kit required only if engine has 6 in. (152 mm) exhaust risers.

(9) Bravo drive applications require the installation of an additional thru-hull or transom mounted water pickup along with the drive unit water pickups. Order these components separately.

(10) This hose kit required only if engine has in-line transmission and 6 in. (152 mm) exhaust risers.

(11) If engine is equipped with 6 in. risers, also order Hose Kit 32-865998A01

(12) Emission Controlled engine

(13) This closed cooling kit will fit Alpha engines with the standard single point drain that incorporates the rod actuated water distribution housing only, and will NOT fit Alpha engines with the special single point drain tee fitting 22-8M2020634 with the blue drain plug which was required in some boats due to the hull design.

(14) Hose kit 32-865039A02 is also required for Axius EC engines

(15) If engine is equipped with risers, 1 of the following hose kits is also required to be ordered separately. Order 32-8M0051174 for engines with 2 in. risers. Order 32-8M0051175 for engines with 4 in. risers. Order 32-8M0051176 for engines with 6 in. risers.

(16) If this kit is being mounted on a 4.3L Alpha engine, also order serpentine belt 57-865615Q03

(17) This air actuated seawater pump rear cover is required to be ordered separately for Bravo applications.

(18) This hose kit only required if engine is equipped with 4.7 in. (119 mm) or 6 in. (152 mm) risers

(19) Alpha models also required a Water Block Off Kit p/n 8M0060840 to be ordered separately

CLOSED COOLING KIT CHART - MCM (PRE-DRY JOINT EXH)

MCM Closed Cooling Kits (2002 and older)

Model	Model Notes	Heat Exchanger Location	Year Range	Serial # Range	Closed Cooling Kit	Belt Kit	Seawater Pump Kit
MCM 4 cyl. (153 cid)		Side	1983 - 1989	6229718 - 0C853255	61086A11	N/A	N/A
MCM 4 cyl. (181cid)	Carb engines	Side	1983 - 2016	6229718 and up	61086A11(19)	N/A	N/A
MCM V-6 (229 cid)		Front	1983 - 1984	6330183 - 6919655	N.L.A.	N/A	N.L.A.(2)
MCM V-6 (262 cid) Alpha	Stamped steel crankshaft pulley	Front	1985 - 1990	0A331455 - 0D445799	N.L.A.(6)	N/A	N.L.A.(2)
MCM V-6 (262 cid) Alpha	Cast crankshaft pulley	Front	1985 - 1990	0A331455 - 0D445799	N.L.A.(6)	N/A	N.L.A.(2)
MCM V-6 (262 cid) Alpha	V-belt	Front	1991 - 1996	0D445800 - 0F802999	N.L.A.(6)	N/A	N.L.A.(2)(3)
MCM V-6 (262 cid) Alpha	Serpentine belt	Front	1996 - 1999	0F803000 - 0L619083	860427A 4(1)(6)(11)	807901T 6(4)(5)	N/A
MCM V-6 (262 cid) Alpha		Front	1999 - 2001	0L619084 - 0M299999	N.L.A.	(21)	N/A
MCM V-6 (262 cid) Alpha	Carb engines	Front	2002	0M300000 - 0M343007	N.L.A.	(21)	N/A
MCM V-6 (262 cid) Alpha	Carb engines	Front	2002	0M343008 - 0M599999	N.L.A.	(22)	N/A
MCM V-6 (262 cid) Alpha	MPI engines	Front	2002	0M300000 - 0M343007	N.L.A.	(21)	46-862914A06(2)
MCM V-6 (262 cid) Alpha	MPI engines	Front	2002	0M343008 - 0M599999	N.L.A.	(22)	46-862914A06(2)
MCM V-6 (262 cid) Bravo	Serpentine belt	Front	1996 - 1999	0F803000 - 0L619083	860427A 4(1)(6)(11)	807901A 5(5)(7)	N/A
MCM V-6 (262 cid) Bravo		Front	1999 - 2001	0L619084 - 0M299999	N.L.A.	(20)	N/A
MCM V-6 (262 cid) Bravo	Carb engines	Front	2002	0M300000 - 0M343007	N.L.A.	(20)	N/A
MCM V-6 (262 cid) Bravo	Carb engines	Front	2002	0M343008 - 0M599999	N.L.A.	(23)	N/A
MCM V-6 (262 cid) Bravo	MPI engines	Front	2002	0M300000 - 0M343007	N.L.A.	(20)	N/A
MCM V-6 (262 cid) Bravo	MPI engines	Front	2002	0M343008 - 0M599999	N.L.A.	(23)	N/A
MCM V-8 (305 & 350 cid)		Front	1983 - 1986	6218462 - 0B525981	N.L.A.(6)	N/A	N.L.A.(2)
MCM V-8 (305 & 350 cid) Alpha	Stamped steel crankshaft pulley	Front	1987 - 1990	0B525982 - 0D445799	N.L.A.(6)	N/A	N.L.A.(2)
MCM V-8 (305 & 350 cid) Alpha	Cast crankshaft pulley	Front	1987 - 1990	0B525982 - 0D445799	N.L.A.(6)	N/A	N.L.A.(2)
MCM V-8 (305 & 350 cid) Alpha	V-belt	Front	1991 - 1996	0D445800 - 0F999999	N.L.A.(6)(12)	N/A	N.L.A.(2)
MCM V-8 (305 & 350 cid) Alpha	Serpentine belt	Front	1997	0K001506 - 0K999999	860427A 4(6)(13)	807901A 5(5)(7)	46-807151A 5(2)

Model	Model Notes	Heat Exchanger Location	Year Range	Serial # Range	Closed Cooling Kit	Belt Kit	Seawater Pump Kit
MCM V-8 (305 & 350 cid Gen+) Alpha	Serpentine belt	Front	1997 - 1999	0K001506 - 0K999999	860427A 5(6)	807901A 5(5)(7)	46-807151A 5(2)
MCM V-8 (305 & 350 cid Gen+) Alpha		Front	1998 - 1999	0L010035 - 0L618999	860427A 5(6)(11)	807901A 5(5)(7)	46-807151A 5(2)
MCM V-8 (305 & 350 cid Gen+) Alpha		Front	1999 - 2001	0L619000 - 0M299999	860427A 7(6)	(20)	46-807151A25(2)
MCM V-8 (305 & 350 cid Gen+) Alpha	Carb engines	Front	2002	0M300000 - 0M343007	860427A 7(6)	(20)	46-862914A06(2)
MCM V-8 (305 & 350 cid Gen+) Alpha	Carb engines	Front	2002	0M343008 - 0M599999	860427A 7(6)	(23)	46-862914A06(2)
MCM V-8 (305 & 350 cid Gen+) Alpha	MPI engines	Front	2002	0M300000 - 0M343007	N.L.A.	(20)	46-862914A06(2)
MCM V-8 (305 & 350 cid Gen+) Alpha	MPI engines	Front	2002	0M343008 - 0M599999	N.L.A.	(23)	46-862914A06(2)
MCM V-8 (305 & 350 cid) Bravo	V-belt	Front	1989 - 1996	0C407810 - 0F999999	N.L.A.(12)(14)	N/A	N/A
MCM V-8 (305 & 350 cid) Bravo	Serpentine belt	Front	1997	0K001506 - 0K999999	860427A 4(6)(13)	807901A 5(5)(7)	N/A
MCM V-8 (305 & 350 cid Gen+) Bravo		Front	1997 - 1999	0K001501 - 0L618999	860427A 5(6)	807901A 5(5)(7)	N/A
MCM V-8 (305, 350 & 377 cid Gen+) Bravo		Front	1999 - 2001	0L619000 - 0M299999	860427A 7	(20)	N/A
MCM V-8 (305, 350 & 377 cid Gen+) Bravo	Carb engines	Front	2002	0M300000 - 0M343007	860427A 7	(20)	N/A
MCM V-8 (305, 350 & 377 cid Gen+) Bravo	Carb engines	Front	2002	0M343008 - 0M599999	860427A 7	(23)	N/A
MCM V-8 (305, 350 & 377 cid Gen+) Bravo	MPI engines	Front	2002	0M300000 - 0M343007	N.L.A.	(20)	N/A
MCM V-8 (305, 350 & 377 cid Gen+) Bravo	MPI engines	Front	2002	0M343008 - 0M599999	N.L.A.	(23)	N/A
MCM V-8 (454 cid) TR/TRS	CEO exhaust manifolds	Rear	1982 - 1987	6083145 - 0B816540	N.L.A.(17)	N/A	N/A
MCM V-8 (454 cid) Alpha		Front	1986 - 1988	0A631894 and up	N/A	N/A	
MCM V-8 (454 cid) Bravo	Carb engines	Front	1988 - 1996	0B721206 - 0F800699	N.L.A.(15)	N/A	N/A
MCM V-8 (454 cid) Bravo	EFI engines	Front	1994 - 1996	0F115700 - 0F602009	N/A	N/A	
MCM V-8 (454 cid) Bravo	EFI engines & front mounted, vertical oil cooler	Front	1996 - 1997	0F602010 - 0K999999	807639A 3(16)	N/A	N/A
MCM V-8 (454 cid Gen VI) Bravo	Carb engines	Front	1996 - 1997	0F800700 - 0K999999	807639A 3	N/A	N/A
MCM V-8 (454 cid) Bravo	EFI engines & serpentine belt	Front	1998 - 2001	0L010003 - 0M024999	807639A 3	N/A	
MCM V-8 (502 cid) Bravo	Carb engines	Front	1990 - 1993	0C878221 - 0F114528	N.L.A.(15)	N/A	N/A
MCM V-8 (502 cid) Bravo	EFI engines	Front	1993 - 1996	0D840650 - 0F802599	N/A	N/A	
MCM V-8 (502 cid) Bravo	EFI engines & front mounted, vertical oil cooler	Front	1996 - 1997	0F802600 - 0K999999	807639A 3	N/A	N/A
MCM V-8 (502 cid) Bravo	EFI engines & serpentine belt	Front	1998 - 2001	0L017000 - 0M024999	807639A 3	N/A	

(1) This kit will fit all engines except the 1996 262 Mag EFI engines (S/N 0F803800 - 0F999999) with VST fuel system which does not have a kit available for it.

(2) Thru hull water pickup is not included with seawater pump kits

(3) If the seawater temperature that this boat will be operating in does not exceed 80 deg. F {26 deg. C}, a Seawater Pump Kit does not have to be installed. If the seawater temperature exceeds 80 deg. F {26 deg. C} , then a Pump kit is required.

(4) 807901A 4 Belt Kit: Order this belt kit instead of the one listed if the engine is in a dual engine boat and you are going to remove the power steering pump and hoses from this engine.

(5) 861578 P/S Pulley: Order this metal 5-3/4 in. (146 mm) P/S pulley if the engine has a plastic 4-3/4 in. (121 mm) O.D. power steering pulley. Reference MerCruiser Parts Bulletin 98-1

(6) Note the additional required kit(s) listed to complete the installation.

(7) 807901A 3 Belt Kit: Order this belt kit instead of the one listed if the engine is in a dual engine boat and you are going to remove the power steering pump and hoses from this engine.

(10) 57-861050 Belt Kit: Order this belt kit if the engine is in a dual engine boat and you are going to remove the power steering pump and hoses from this engine.

(11) 860315A 2 Extender and Hose Kit: Also order this kit if installing on a V-6 or V-8 (305 CID) with a carburetor

(12) Kit will not fit 1995-1996 (350 CID) EFI engines (S/N 0F225560 - 0F999999) with VST fuel system. No kit available.

(13) 32-861070T Fuel Line: Order this fuel line if the engine is below S/N 0K154018 and has a 2 bbl carburetor

(14) 85152A 2 Oil Cooler: This kit is required if boat will be operated in seawater above 90 Deg. F {32 Deg. C}

(15) 17833A 7 Installation Kit: This kit is required when 3 in. (76 mm) or 6 in. (152 mm) risers are installed.

(16) 32- 62987A 3 Hose Kit: Order this kit if engine is a 7.4LX TBI and is equipped with 5/8 in. (16 mm) I.D. hose and fittings from the back of the intake manifold to the engine water circulating pump

(17) 44443A 3 Installation Kit: This kit is also required

(18) No kit available

(19) Closed cooling kit will not fit 3.0L engines with side mounts

(20) 57-863876 8 Belt Kit: Order this belt kit if the engine is in a dual engine boat and you are going to remove the power steering pump and hoses from this engine.

(21) 57-863876 9 Belt Kit: Order this belt kit if the engine is in a dual engine boat and you are going to remove the power steering pump and hoses from this engine.

(22) 889432A 1 Belt Kit: Order this belt kit if the engine is in a dual engine boat and you are going to remove the power steering pump and hoses from this engine.

(23) 889433A 1 Belt Kit: Order this belt kit if the engine is in a dual engine boat and you are going to remove the power steering pump and hoses from this engine.

CLOSED COOLING KIT CHART - MIE (PRE-DRY JOINT EXH)

MIE Closed Cooling Kits (2002 and older)

Model	Model Notes	Year Range	Serial # Range	Closed Cooling Kit	Installations Kit
	FRONT MOUNTED COOLING KITS				
MIE V-8 (305 & 350 cid)	In-line transmission & CEO exh manifolds	1981 - 1993	5907058 - 0F024999	N.L.A.	N/A
MIE V-8 (305 & 350 cid)	V-drive transmission & CEO exh manifolds	1981 - 1993	5907058 - 0F024999	(3)	N/A
MIE V-8 (350 cid)	All transmissions	1994 - 1996	0F025000 - 0K040306	N.L.A.	N/A
MIE V-8 (350 cid)	Carb engine & serpentine belt	1997	0K040307 - 0K999999		
MIE V-8 (350 & 377 cid Gen+)		1997 - 2001	0K040300 - 0M299999	860427A 5	N/A
MIE V-8 (350 cid Gen+)	Carb engines	2002	0M300000 - 0M316999	860427A 5	N/A
MIE V-8 (350 & 377 cid Gen+)	MPI engines	2002	0M300000 - 0M316999	N.L.A.	N/A
MIE V-8 (454 cid)	Carb engines & B/W 72 series in-line or V-drive	1992 - 1997	0D715494 - 0K999999	N/A	
MIE V-8 (454 cid)	Carb engines & Hurth or B/W 5000 transmission	1992 - 1997	0D715494 - 0K999999	N.L.A.	N.L.A.(1)
MIE V-8 (454 cid Gen V)	EFI engines	1995 - 1996	0F563052 - 0F820103	N/A	
MIE V-8 (454 cid Gen VI)	EFI engines	1996 - 2001	0F820104 - 0L674613	807639A 3	N.L.A.(2)
MIE V-8 (502 cid)	Hurth transmission & cast iron exh manifolds	1990 - 1992	0C878221 - 0D857199	N.L.A.	N.L.A.(1)
MIE V-8 (502 cid)	Hurth transmission & stainless steel exh manifolds	1990 - 1992	0C878221 - 0D857199	N.L.A.	N.L.A.(1)
MIE V-8 (502 cid)	Carb engines & B/W 72 series in-line or V-drive	1993 - 1996	0D857200 - 0F819619	N/A	
MIE V-8 (502 cid)	Carb engines & Hurth or B/W 5000 transmission	1993 - 1996	0D857200 - 0F819619	N.L.A.	N.L.A.(1)
MIE V-8 (502 cid Gen VI)	EFI engines	1996 - 2001	0F819620 - 0L674200	807639A 3	N/A
	REAR MOUNTED COOLING KITS				
MIE V-8 (305 & 350 cid)	B/W in-line transmission & CEO exh manifolds	1981 - 1997	5907058 - 0K999999	N.L.A.	N.L.A.
MIE V-8 (305 & 350 cid)	Hurth or V-drive transmission & CEO exh manifolds	1981 - 1997	5907058 - 0K999999	N.L.A.	N.L.A.
MIE V-8 (350 & 377 cid Gen+)		1997 - 2001	0K040300 - 0M299999	N/A	
MIE V-8 (350 cid Gen+)	Carb engines	2002	0M300000 - 0M316999	N/A	
MIE V-8 (350 & 377 cid Gen+)	MPI engines	2002	0M300000 - 0M316999	N/A	
MIE V-8 (454 cid)	Carb engines & B/W 72 in-line series transmission	1981 - 1997	5889914 - 0K999999	N.L.A.	N.L.A.
MIE V-8 (454 cid)	Carb engines & B/W or Hurth V-drive trans.	1981 - 1997	5889914 - 0K999999	N.L.A.	N.L.A.
MIE V-8 (454 cid)	Carb engines & Hurth down-angle or B/W 5000	1989 - 1997	0C391564 - 0K999999	N.L.A.	N.L.A.
MIE V-8 (454 cid)	EFI engines & all transmissions	1995 - 1996	0F563052 - 0F820141	N/A	
MIE V-8 (454 cid)	EFI engines & all transmissions	1996 - 2001	0F820142 - 0L674613	N/A	
MIE V-8 (502 cid)	EFI engines & all transmissions	1990 - 2001	0C878221 - 0L674200	N/A	

(1) This installation kit is required when 3 in. (76 mm) or 6 in. (152) risers are installed.

(2) Order this hose kit if engine is equipped with 5/8 in. (16 mm) I.D. hose and fittings from the back of the intake manifold to the engine water circulating pump

(3) Use ONLY rear mounted closed cooling kit

(4) Use ONLY front mounted closed cooling kit

(5) No kit available

CLOSED COOLING KIT CHART - SKI (PRE-DRY JOINT EXH)

SKI Closed Cooling Kits (2002 and older)

Model	Model Notes	Year Range	Serial # Range	Closed Cooling Kit	Installation Kit
	FRONT MOUNTED COOLING KITS				
Black Scorpion Ski		1996 - 2002	0F800000 - 0M316999	N/A	
MX 6.2 MPI Black Scorpion Ski		2001 - 2002	0L680003 - 0M316999	N/A	
Ski V-8 (350 cid)	EFI engines	1994 - 1996	0F215561 - 0K040005	(1)	N/A
Ski V-8 (350 cid)	2 bbl. carb and v-belt	1994 - 1996	0F160285 - 0K040003	N.L.A.	N/A
Ski V-8 (350 cid)	4 bbl. carb and v-belt	1994 - 1996	0F160100 - 0K040399	N.L.A.	N/A
Ski V-8 (350 cid)	2 bbl. carb & serpentine belt	1997	0K040004 - 0K999999	N/A	
Ski V-8 (350 cid)	4 bbl. carb & serpentine belt	1997	0K040400 - 0K999999	860427A 4	N/A
Ski V-8 (350 cid Gen+)		1997 - 2001	0K040006 - 0M299999	860427A 5	N/A
Ski V-8 (350 cid Gen+)	Carb engines	2002	0M300000 - 0M316999	860427A 5	N/A
Ski V-8 (350 cid Gen+)	MPI engines	2002	0M300000 - 0M316999	N.L.A.	
Ski V-8 (454 cid)		1995 - 1996	0F215800 - 0F820099	(1)	N/A
	REAR MOUNTED COOLING KITS				
Black Scorpion Ski		1996 - 2002	0F800000 - 0M316999	(1)	N/A
MX 6.2 MPI Black Scorpion Ski		2001 - 2002	0L680003 - 0M316999	(1)	N/A
Ski V-8 (350 cid)	EFI engines	1994 - 1996	0F215561 - 0K040005	(1)	N/A
Ski V-8 (350 cid)	Carb engines & in-line transmission	1994 - 1997	0F160100 - 0K999999	N.L.A.	N.L.A.
Ski V-8 (350 cid)	Carb engines & V-drive transmission	1994 - 1997	0F160100 - 0K999999	N.L.A.	N.L.A.
Ski V-8 (350 cid Gen+)		1997 - 2001	0K040006 - 0M299999	N/A	
Ski V-8 (350 cid Gen+)	Carb engines	2002	0M300000 - 0M316999	N/A	
Ski V-8 (350 cid Gen+)	MPI engines w/ ECM 555	2002	0M300000 - 0M316999		
				N/A	
Ski V-8 (454 cid)		1995 - 1996	0F215800 - 0F820099	N/A	

(1) No kit available

(2) Use ONLY rear mounted closed cooling kit

(3) Use ONLY front mounted closed cooling kit

SEAWATER HOSE DRAIN KIT

This kit will allow draining of the seawater pump without having to remove the seawater hose. Kit is inserted into the existing seawater hose.

SEAWATER HOSE DRAIN KIT



861505A 1

Fits MCM/MIE engines equipped with a seawater pump.

ENGINE CIRCULATING PUMP DRAIN KIT

This kit will allow draining of the engine circulating water pump without having to remove the hose. Kit contains new circulating pump hose with drain fitting.

CIRCULATING PUMP HOSE



32-861590A05

Fits MCM/MIE GM V-6 and V-8 (305, 350 & 377 cid) engines

ENGINE FLUSH CONNECTOR KIT

For use with the engine circulating water pump drain kit (32-861590A2). Kit contains a quick disconnect fitting to attach to garden hose. Kit is designed to flush raw water cooled MIE & Ski engines without running the engine.

ENGINE FLUSH CONNECTOR KIT



22-861932A 1

Fits MIE & Tow Sports engines with drainable circulating pump hose.

ENGINE FLUSH KIT

ENGINE FLUSH KIT



898235A01

This kit will allow you to flush the engine while it is running, therefore offering a more complete flush of the raw water cooled components.

Fits 1988 & newer MCM V-6 & V-8 (305, 350, 377, 454 & 502 cid) non-EC engines with BRAVO drives & MIE's.
NOTE: Mounting bracket in kit will need to be REMOTE MOUNTED on V-6 engines with 1 pc exhaust manifolds or engines with stainless steel exhaust elbows.

ENGINE FLUSH KIT



8M0089505

This kit will allow you to flush the engine while it is running, therefore offering a more complete flush of the raw water cooled components.

Fits 2011 & newer MCM V6 4.3L MPI EC & 4.5L engines with BRAVO drives.

ENGINE FLUSH KIT



8M0099735

This kit will allow you to flush the engine while it is running, therefore offering a more complete flush of the raw water cooled components.

Fits 2011 & newer MCM V6 4.3L MPI EC, 4.5L & 2015 6.2L engines with BRAVO drives.

ENGINE FLUSH KIT



879288A40

This kit will allow you to flush the engine while it is running, therefore offering a more complete flush of the raw water cooled components.

Fits 2008 & newer MCM V-8 (305, 350 & 377 cid) Emissions Control engines with BRAVO drives & MIE's.

ENGINE FLUSH KIT



898235A02

This kit will allow you to flush the engine while it is running, therefore offering a more complete flush of the raw water cooled components.

Fits all MCM/MIE 8.1L & 8.2L non-EC engines.

ENGINE FLUSH KIT



8M0057577

This kit will allow you to flush the engine while it is running, therefore offering a more complete flush of the raw water cooled components.

Fits 2008 and newer MCM/MIE 8.1L & 8.2L Emissions Control engines.

FLUSHING ATTACHMENTS

FLUSHING ATTACHMENT



44357T 2

Will allow for running at idle speeds.

Fits Mercury/Mariner 20 hp. and higher outboards, 9.9/15 hp. FourStroke (323cc) Bigfoot outboards, all Model Year 2005 and Newer 8/9.9 hp. Four Stroke outboards, 15 hp. FourStroke (351cc) outboards, all MerCruiser Sterndrives (except Bravo One Perf. & Blackhawk) and MHP Torque Master gearcases. Note: 2000 and newer V-6 outboards and MerCruiser Bravo drives with dual water pick-up also require Dual Water Pick-Up Flush Seal Kit p/n 881150K 1.

Priced individually, sold @ multiples of 4

Mercury Branded, Clamshell Package Point of Sale Packaged.

FLUSHING ATTACHMENT



44357Q 2

Will allow for running at idle speeds.

Fits Mercury/Mariner 20 hp. and higher outboards, 9.9/15 hp. FourStroke (323cc) Bigfoot outboards, all Model Year 2005 and Newer 8/9.9 hp. Four Stroke outboards, 15 hp. FourStroke (351cc) outboards, all MerCruiser Sterndrives (except Bravo One Perf. & Blackhawk) and MHP Torque Master gearcases. Note: 2000 and newer V-6 outboards and MerCruiser Bravo drives with dual water pick-up also require Dual Water Pick-Up Flush Seal Kit p/n 881150Q 1.

Priced individually, sold @ multiples of 4

Quicksilver Branded, Clamshell Package Point of Sale Packaged.

DUAL WATER PICKUP FLUSH SEAL KIT



881150K 1

Provides a front water pick-up seal for gearcases with dual water pick-ups

Fits 2000 and newer Mercury/Mariner V-6 outboards with dual water pick-ups; and 2000 and newer MerCruiser Bravo One, X, XR & XZ drives with dual water pick-ups.

Priced individually, sold @ multiples of 2

Mercury Branded, Clamshell Package Point of Sale Packaged.

DUAL WATER PICKUP FLUSH SEAL KIT



881150Q 1

Provides a front water pick-up seal for gearcases with dual water pick-ups

Fits 2000 and newer Mercury/Mariner V-6 outboards with dual water pick-ups; and 2000 and newer MerCruiser Bravo One, X, XR & XZ drives with dual water pick-ups.

Priced individually, sold @ multiples of 2

Quicksilver Branded, Clamshell Package Point of Sale Packaged.

FLUSHING KIT



849996T 1

Fits MCM Bravo I Performance & BlackHawk drives with low water pick-up.

DRIVESHAFT EXTENSION (JACKSHAFT) KITS

Converts standard sterndrive package to a driveshaft configuration for conventional center console and triple engine high performance applications.

JACKSHAFT MAIN KIT



98634A20

For use with DHB power steering system. Also order driveshaft kit separately to complete the installation.
Note: V-6 & V-8 (305, 350 & 377 cid) engines (s/n 0W650000 and above) & 496 Mag engines (s/n 0W310000 and above) also require harness 84-866785T01. If DTS, additional harness 84-866784T01 is also required.

Fits 1994 and newer MCM V-6 & V-8 gasoline models with DHB p/s cylinder (except MCM 4.5L & 6.2L - Mercury engines)

JACKSHAFT MAIN KIT

Image not Available.

8M0089506

Order driveshaft kit separately to complete the installation.
Note: If DTS, additional harness 84-866784T01 is also required.

NEW

Fits 2014 and newer MCM 4.5L & 2015 6.2L V-8 gasoline models

JACKSHAFT MAIN KIT



863914A02

Shaft not included.

Fits 1.7 MS 120 diesels.

JACKSHAFT MAIN KIT

Image not Available.

8M0101387

Primary application is triple engines. (Shaft not included)

NEW

Fits MCM 2.0L diesel

JACKSHAFT MAIN KIT



806843A 2

Primary application is triple engines. (Shaft not included)

Fits 2.8 ES & EI (s/n 88010499 & below) and 4.2 ES & EI diesels.

JACKSHAFT MAIN KIT



806843A06

Primary application is triple engines. (Shaft not included)
For the 2.8L installation, 2 pcs of 855454 (mount) and 4 pcs of 12-809931094 (washer) are required. For the 4.2L installation, 2 pcs of 896332029 (mount) and 4 pcs of 12-809931094 (washer) are required.

Fits MCM QSD 2.8L & 4.2L.

JACKSHAFT MAIN KIT

Image not Available.

8M0088724

Primary application is triple engines. (Shaft not included)

Fits MCM 3.0L V6 TDI diesel

8M0085664

Primary application is triple engines. (Shaft not included)

Fits MCM 4.2L V8 TDI diesel

DRIVESHAFT KIT



862772A28

28 in.(711 mm) driveshaft with slip yoke.

Standard shaft for use with 4.3L MPI engine.
Also fits 1.7 MS 120 diesels.

DRIVESHAFT KIT



45- 94819T 5

34-1/2 in.(876 mm) driveshaft. Primary application is for use with the 2.8L, 4.2L & 7.3L diesel main kits, also triple engines applications.

DRIVESHAFT KIT



45- 86978A 3

39.64 in.(1 m) optional driveshaft.

DRIVESHAFT KIT



45-864286A 1

63 in. (1.6 m) driveshaft. (Optional shaft for use with 2.8L, 4.2L & 7.3L diesel main kits.)

EXHAUST FLANGE KIT



862268A 4

Included with 98634A20 driveshaft Extension Kit
Fits MCM V-6 & V-8 gasoline models with DHB p/s cylinder.

EXHAUST TUBE



864957

For use on 1.7 MS 120 diesel engines with 31 in.(787 mm) or shorter driveshaft.

DRIVESHAFT EXTENSION (JACKSHAFT) KIT CHART

MCM Driveshaft Extension Kits

Model	Model Notes	Year Range	Serial # Range	Main Kit	Drive Shaft (Standard)	Drive Shaft (Optional)
MCM V-6 & V-8	For engines w/ Saginaw p/s system	1991 - 1993	0D445877 - 0F114599	N.L.A.	N/A	45- 94819T 5(2)
MCM V-6 & V-8	For DHB p/s system (except 4.3L MPI & 496 Mag)	1994 - 2006	0F114600 - 0W649999	98634A20	N/A	45- 94819T 5(2)
MCM V-6 & V-8	For DHB p/s system (except 4.3L MPI & 496 Mag)	2006 - 2014	0W650000 and up	98634A20(7)(8)(9)	N/A	45- 94819T 5(2)
MCM 4.3L MPI		2002 - 2006	0M300000 - 0W649999	98634A20	862772A28	45- 94819T 5(2)
MCM 4.3L MPI		2006 - 2016	0W650000 and up	98634A20(7)(8)	862772A28	45- 94819T 5(2)
MCM 4.5L		2014 - 2016	2A441953 and up	8M0089506	N/A	45- 94819T 5(2)
MCM 6.2L		2015 - 2016	2A456613 and up	8M0089506	N/A	45- 94819T 5(2)
MCM 496 Mag		2001 - 2005	0M025000 - 0W309999	98634A20	N/A	45- 94819T 5(2)
MCM 496 Mag		2005 - 2016	0W310000 and up	98634A20(7)(8)	N/A	45- 94819T 5(2)
MCM 8.2L Mag		2010 - 2016	1A350340 and up	98634A20(7)(8)	N/A	45- 94819T 5(2)
MCM D1.7L DTI		2001 - 2009	0M055000 and up	863914A02	N.L.A.	862772A28
MCM D2.8L ES & EI		1997 - 2005	0K144109 - 88010499	806843A 2	45- 94819T 5	45-864286A 1
QSD 2.8L		2007 - 2016	88300000 and up	806843A06	45- 94819T 5	45-864286A 1
3.0L V6 TDI		2013 - 2016	All - All	8M0088724	45- 94819T 5	N/A
4.2L V8 TDI		2013 - 2016	All - All	8M0085664	45- 94819T 5	N/A
MCM D4.2L		1994 - 1997	0D554732 - 0L668673	806843A 2	45- 94819T 5	45-864286A 1
MCM D4.2L ES & EI		1997 - 2016	0K144114 and up	806843A 2	45- 94819T 5	45-864286A 1
QSD 4.2L		2007 - 2016	88400000 and up	806843A06	45- 94819T 5	45-864286A 1
MCM D7.3L		1994 - 1996	0F060000 and up	N.L.A.	45- 94819T 5	45-864286A 1

Model	Model Notes	Year Range	Serial # Range	Main Kit	Drive Shaft (Standard)	Drive Shaft (Optional)
MCM D7.3L D-Tronic		1997 - 2001	0K095775 and up	N.L.A.	45- 94819T 5	45-864286A 1

(1) Exhaust tube only

(2) For triple engine applications, this shorter driveshaft [34-1/2 in.(876mm)] may be required.

(3) Exhaust extension kit is for use on engines 300 HP and below.

(5) No kit available

(6) Exhaust flange kit

(7) Order transom harness 84-866785T01separately to complete an MPI engine installation.

(8) Order this additional harness 84-866784T01 if engine has DTS

(9) Order transom harness 84-899719T05 separately to complete a carburated engine installation.

TAILSTOCK KITS

TAILSTOCK KITS



8M0106961

For jet drive applications
Fits QSD 2.0L, 2.8L & 4.2L diesels

NEW

TAILSTOCK KITS



8M0098561

For jet drive applications
Fits MCM 3.0L V6 TDI diesels

TAILSTOCK KITS



8M0098562

For jet drive applications
Fits 4.2L V8 TDI diesels

TAILSTOCK KITS



98-8M0106963

For jet drive applications
Fits MCM 8.2L engines

NEW

REMOTE OIL FILTER KITS

Relocates the oil filter from lower block mount to a higher exhaust elbow mount for ease of servicing.

REMOTE OIL FILTER KIT



807459A 3

Fits 1996-2002 MCM V-6 (Gen+) Carb & TBI engines (s/n 0F803000-0M614999). Also fits the 4.3L Plus-Series engine.

REMOTE OIL FILTER KIT



864990A 2

Fits 2002 & newer MCM V-6 Carb engines (s/n 0M615000 and up).

REMOTE OIL FILTER KIT



35-806329A 1

Fits 1996 & older MCM/MIE V-8 (305 & 350 cid) engines with 4 in.(102 mm) O.D. exhaust elbows. Also fits 1997-2002 Tow Sports V-8 (350 & 377 cid) engines (s/n 0K040001-0M316999). See application chart.

REMOTE OIL FILTER KIT



807459A09

Fits 1997-2002 MCM V-8 (305 & 350 cid) carb engines with standard cooling (s/n 0K001501-0M614999).

REMOTE OIL FILTER KIT



864990A 1

Fits 2001-2002 MCM V-8 (305 & 350 cid) carb engines with closed cooling (s/n 0M300000-0M614999). Fits 2002 & newer MCM V-8 (305 & 350 cid) carb engines (s/n 0M615000 and up).

REMOTE OIL FILTER KIT CHART

MCM Remote Oil Filter Kits

Model	Model Notes	Year Range	Serial # Range	Remote Oil Filter Kit
MCM 4 cyl. (153 & 181 cid)		1983 - 1995	6229718 and up	(5)
MCM 4 cyl. (181 cid)		1996 - 2016	0F604000 and up	N.L.A.
MCM V-6 (229 cid)		1983 - 1984	6330183 and up	(5)
MCM V-6 (262 cid)	3 in.(76 mm) exhaust elbows	1985 - 1986	0A331455 - 0B527955	(5)
MCM V-6 (262 cid)	4 in.(102 mm) exhaust elbows	1985 - 1990	0A331455 - 0D445799	N.L.A.
MCM V-6 (262 cid)		1991 - 1996	0D445800 - 0F802999	N.L.A.(2)(3)
MCM V-6 (262 cid) (Gen +)	Carb & TBI engines	1996 - 2002	0F803000 - 0M614999	807459A 3
MCM V-6 (262 cid) (Gen +)	Carb engines	2002 - 2016	0M615000 and up	864990A 2
MCM V-6 (262 cid) (Gen +)	MPI engines	2002 - 2016	0M300000 and up	(6)
MCM V-8 (305 & 350 cid)	CEO exhaust manifolds	1983 - 1986	6218462 and up	N.L.A.(4)
MCM V-8 (305 & 350 cid)	3 in.(76 mm) exhaust elbows	1987 - 1990	0B525982 - 0D445799	N.L.A.(4)
MCM V-8 (305 & 350 cid)	4 in.(102 mm) exhaust elbow	1987 - 1990	0B525982 - 0D445799	35-806329A 1(1)(2)(3)
MCM V-8 (305 & 350 cid) Alpha		1991 - 1996	0D445800 - 0K001500	35-806329A 1(1)(2)(3)
MCM V-8 (305 & 350 cid) Bravo		1991 - 1996	0D445800 - 0K001500	(6)
MCM V-8 (305 & 350 cid)		1997 - 2001	0K001501 - 0M299999	807459A09
MCM V-8 (305 & 350 cid)	Carb engines	2002	0M300000 - 0M614999	807459A09
MCM V-8 (305 & 350 cid)	Carb engines	2002 - 2016	0M615000 and up	864990A 1
MCM V-8 (305, 350 & 377 cid)	MPI engines	2002 - 2016	0M300000 and up	(6)
MIE V-8 (305, 350 & 377 cid)	CEO exhaust manifolds	1981 - 2016	5907058 and up	(6)

Model	Model Notes	Year Range	Serial # Range	Remote Oil Filter Kit
Ski V-8 (350 cid)	3 in.(76 mm) exhaust elbows	1987 - 1990	0B514627 - 0D434549	N.L.A.(4)
Ski V-8 (350 cid)	4 in.(102 mm) exhaust elbow	1987 - 1996	0B514627 - 0K040000	35-806329A 1(1)(2)(3)
Ski V-8 (350 cid)		1997 - 2002	0K040001 - 0M316999	35-806329A 1(1)(2)(3)
Ski V-8 (350 & 377 cid)		2002 - 2016	0M317000 and up	(5)
MX 6.2L Black Scorpion Ski		2001 - 2016	0L670015 and up	(7)
MCM/MIE V-8 (454, 496 & 502 cid)	CEO exhaust manifolds	1982 - 2016	6083145 and up	(6)
Ski V-8 (454 cid)		1995 - 1996	0F215800 and up	(6)

(1) If the engine has stainless steel exhaust elbows on it, order Oil Filter Bracket Kit P/N 817403A 4 also.

(2) If the engine has 6 in.(152 mm) risers installed on it, an Oil Filter Hose Extension Kit may be required.

(3) If the engine has cast iron exhaust elbows and 3 in.(76 mm) risers, order 2 studs P/N 16-11376

(4) If the engine has 3 in.(76 mm) risers, order 2 studs P/N 16-34713

(5) No Kit Available

(6) Standard Equipment

(7) Factory installed option only

REMOTE OIL FILTER BRACKET KIT

Relocates the oil filter when installing 6 in.(152 mm) risers to engines that have the remote oil filter bracket attached to the cast iron exhaust elbows.

REMOTE OIL FILTER BRACKET KIT



861557A 1

Fits 1997 & newer MIE engines with 6 in.(152 mm) risers & cast iron elbows. Will not work on engines with stainless steel elbows.

REMOTE OIL FILTER BRACKET KIT CHART

MCM Oil Filter Bracket

Model	Year Range	Serial # Range	Oil Filter Bracket Kit
MIE 5.7L (Gen +)	1998 - 2001	0L002003 - 0M299999	861557A 1
MIE 350 Mag MPI (Gen +)	1998 - 2001	0L002008 - 0M299999	861557A 1
MIE 350 Horizon (Gen +)	1999 - 2001	0L304700 - 0M299999	861557A 1
MIE MX 6.2 MPI	2001	0L680003 - 0M299999	861557A 1
Ski 5.7L	1997	0K040004 - 0K999999	861557A 1
Ski 5.7L (Gen +)	1998 - 2001	0L002005 - 0M299999	861557A 1

Model	Year Range	Serial # Range	Oil Filter Bracket Kit
Ski 350 Mag	1997	0K040400 - 0K999999	861557A 1
Ski 350 Mag EFI (Gen +)	1997	0K040006 - 0K999999	861557A 1
Ski 350 Mag MPI (Gen+)	1998 - 2001	0L002600 - 0M299999	861557A 1
Black Scorpion Ski MIE	1997 - 2003	0K040001 - 0M391599	861557A 1
MX 6.2 Black Scorpion Ski	2001 - 2003	0L680015 - 0M391599	861557A 1
MCM 7.4L Bravo (Gen VI)	1996 - 1997	0F800700 - 0K999999	861557A 1
MIE 7.4L MPI (Gen VI)	1998 - 2001	0L002006 - 0L674613	861557A 1
MIE 454 Mag MPI Horizon	1998 - 2001	0L002200 - 0L674000	861557A 1
MIE 8.2L MPI (Gen VI)	1998 - 2001	0L002450 - 0L674200	861557A 1

REMOTE OIL HOSE EXTENSION KITS

May be required on certain models when a 6 in.(152 mm) exhaust riser is installed because the original oil hoses going to the remote oil will be too short. Not required on engines with EFI or MPI.

REMOTE OIL HOSE EXT. KIT



32-818748A 1

Fits MCM/MIE V-8 (305, 350, 454 & 502 cid) engines. See application chart.

REMOTE OIL HOSE EXTENSION KIT CHART

MCM Oil Hose Extension Kits

Model	Model Notes	Year Range	Serial # Range	Oil Hose Extension Kit
MCM V-8 (305 & 350 cid)	CEO exhaust manifolds	1983 - 1993	6218462 - 0F114689	32-818748A 1
MCM 5.0L/LX	Carb engines	1994 - 1995	0F114690 - 0F600999	N.L.A.
MCM 5.7L/LX & 350 Mag Alpha	Carb engines	1994 - 1996	0F114690 - 0K001526	N.L.A.
MIE 230/5.0L		1981 - 1987	5907058 - 0B788151	32-818748A 1
MIE 260/5.7L		1981 - 1993	5907058 - 0F024999	32-818748A 1
MIE 5.7L	Carb engines, except V-drive	1994 - 1996	0F025000 - 0K040299	N.L.A.
MIE 5.7L	Carb engines & V-drive transmission	1994 - 1996	0F025000 - 0K040299	N.L.A.
Ski 5.7L	Carb engines	1987 - 1996	0B514627 - 0K040003	32-818748A 1
Ski 350 Mag	Carb engines	1994 - 1996	0F160100 - 0K040399	32-818748A 1
MCM 330/7.4L		1982 - 1993	6083145 - 0F114759	32-818748A 1
MCM 7.4L Bravo	Carb engines	1988 - 1996	0F114760 - 0F800699	N.L.A.
MCM 7.4L Bravo	Carb engines with vertical front mount oil cooler	1996 - 1997	0F800700 - 0K999999	N.L.A.
MCM 454 Mag	Carb engines	1986 - 1993	0A631894 - 0F114759	32-818748A 1
MCM 454 Mag	Carb engines	1994 - 1997	0F114760 - 0K999999	N.L.A.
		2016		
MCM 502 Mag	Carb engines	1990 - 1993	0C878221 - 0F114528	32-818748A 1
MIE 340/7.4L		1981 - 1993	5889914 - 0F159999	32-818748A 1
MIE 7.4L	B/W transmission, except V-drive	1994 - 1997	0F160000 - 0K999999	N.L.A.
MIE 7.4L	Hurth transmission, except V-drive	1994 - 1997	0F160000 - 0K999999	N.L.A.
MIE 7.4L	V-drive transmission	1994 - 1997	0F160000 - 0K999999	N.L.A.
MIE 8.2L		1990 - 1993	0C878221 - 0F159999	32-818748A 1
MIE 8.2L	B/W or Hurth transmission, except V-drive	1994 - 1996	0F160000 - 0F819619	N.L.A.
MIE 8.2L	V-drive transmission	1994 - 1996	0F160000 - 0F819619	N.L.A.

OIL DRAIN HOSE KITS

These oil drain kits allow draining of engine oil through the oil pan drain plug.

OIL DRAIN KIT



32-865277A02

Includes special tether so oil drain hose can be pulled out through the boat bilge drain hole to drain engine oil. Boat needs to be removed from the water to take advantage of this feature.

Fits 1995 and older MCM GM 4 cyl., V-6 & V-8 engines (all, except 8.1L) with standard (SAE) 1/2-20 oil drain plug threads.

OIL DRAIN KIT



32-865278A03

Includes special tether so oil drain hose can be pulled out through the boat bilge drain hole to drain engine oil. Boat needs to be removed from the water to take advantage of this feature.

Fits 1997 and newer MCM V-6 (s/n 0K000000-0M000000).

OIL DRAIN KIT



32-865278A04

Includes special tether so oil drain hose can be pulled out through the boat bilge drain hole to drain engine oil. Boat needs to be removed from the water to take advantage of this feature.

Fits 2009 and newer MCM V-6 MPI engines (s/n 1A343329 and up).

OIL DRAIN KIT



32-865281A02

Includes special tether so oil drain hose can be pulled out through the boat bilge drain hole to drain engine oil. Boat needs to be removed from the water to take advantage of this feature.

Fits 1996 and newer MCM V-8 engines with metric M12 oil pan drain plug threads.

OIL DRAIN HOSE KIT CHART

MCM Oil Drain Hose Kits

Model	Model Notes	Year Range	Serial # Range	Oil Drain Hose Kit with Tether
MCM 4 cyl. (153 & 181 cid)		1983 - 2016	6229718 and up	32-865277A02
MCM V-6 (229cid)		1983 - 1984	6330183 - 6919655	32-865277A02
MCM V-6 (262cid)		1985 - 1996	0A331455 - 0F802999	32-865277A02
MCM V-6 (262cid)	Cast aluminum oil pan	1996	0F803000 - 0K000000	(1)
MCM V-6 (262cid)		1997 - 2000	0K000001 - 0M000000	32-865278A03
MCM V-6 (262cid)	Jackshaft models	1999 - 2016	0L320000 and up	N.L.A.
MCM V-6 (262cid)	MPI engines	2009 - 2016	1A343329 and up	32-865278A04
MCM V-8 (305 & 350cid)	1/2-20 oil plug threads	1983 - 1995	6218462 - 0F600999	32-865277A02
MCM V-8 (305, 350 & 377cid)	12MM oil plug threads	1996 - 2016	0F601000 and up	32-865281A02
MCM V-8 (305, 350 & 377cid)	MPI engines	2009 - 2016	1A342186 and up	32-865281A02
MCM V-8 (454cid)	1/2-20 oil plug threads	1982 - 1996	6083145 - 0F800699	32-865277A02
MCM V-8 (454cid)	12MM oil plug threads	1996 - 2001	0F800700 - 0M024999	32-865281A02
MCM V-8 (496cid)	12MM oil plug threads	2009 - 2016	1A349411 and up	32-865281A02
MCM V-8 (502cid)	1/2-20 oil plug threads	1990 - 1993	0C878221 - 0F802599	32-865277A02
MCM V-8 (502cid)	12MM oil plug threads	1996 - 2001	0F802600 - 0M024999	32-865281A02

(1) Kit not available

WATER ELIMINATOR

Uses polymer crystals encased in a plastic filter to absorb water from the fuel in a fuel tank. Supplied with a 2 ft.(610 mm) lanyard. Sold in counter display box. Approximate dimensions: 3-1/2 in.(89 mm) a 1-1/4 in.(32 mm).

WATER ELIMINATOR



67-808887Q

Contains a drying agent commonly used to keep small, sealed containers dry. It absorbs water that has collected in the fuel tank.
How to use: Attach to the inside fuel cap with the lanyard (included). Adjust the lanyard so the Water Eliminator sits at the bottom of the fuel tank. Replace as needed.
For use in all octane grades of gasoline, including ethanol blended. Not recommended for diesel fuel.

For use in all 2-cycle and 4-cycle gasoline outboard, sterndrive, inboard and jet drive marine engines.

Priced individually, sold @ multiples of 6

Quicksilver Branded, Point of Sale Packaged.

BOOST PUMP KIT

BOOST PUMP KIT



862264A 7

Helps minimize vapor locking
Fits MCM/MIE 4.3L, 5.0L, 5.7L & 6.2L EFI/MPI engines

FUEL FILTER KIT

FUEL FILTER KIT



35-864572A 1

Prevents blockage of the boost pump inlet from debris that may be in the fuel tank. This filter is installed in-line between the fuel tank and boost pump. Standard equipment with all current engines using a boost pump. This filter will backfit older MerCruiser 8.1S/496 Mag engines.

Fits all MCM/MIE gasoline engines using a boost pump.

FUEL FILTER



35-864572

Replacement in-line filter

Fits all MCM/MIE gasoline engines using a boost pump.

HIGH CAPACITY WATER SEPARATING FUEL FILTER - GASOLINE OR DIESEL

WATER SEPARATING FUEL FILTER KIT



35-8M0082291

Kit consisting of our vessel mounted head (without fittings) and our High Capacity water separating fuel filter. Our brass fittings may be used with gas engines but stainless steel fittings are required in diesel applications. Filter features 10 micron, 90% efficiency with a 120 gallon per hour flow rate.

Mercury Branded

WATER SEPARATING FUEL FILTER KIT



35-8M0082290

Kit consisting of our vessel mounted head (without fittings) and our High Capacity water separating fuel filter. Our brass fittings may be used with gas engines but stainless steel fittings p/n 22-8M0058419 are required in diesel applications. Filter features 10 micron, 90% efficiency with a 120 gallon per hour flow rate.

Compatible with most 2-Stroke and 4-Stroke Outboards and most Inboard & Sterndrive Gas and Diesel Engines.

Quicksilver Branded

WATER SEPARATING FUEL FILTER



35-8M0079963

High volume replacement filter featuring 10 micron filtration with over 90% efficiency, flowing 120 gallons per hour while separating water from your fuel. The internal epoxy coating protects against corrosion and the low pressure drop reduces fuel flow restriction helping to prevent vapor-locking and stalling. This filter contains 25% more media than comparable aftermarket filters, providing longer life and improved water separation.

Mercury Branded

WATER SEPARATING FUEL FILTER



35-8M0079962

High volume replacement filter featuring 10 micron filtration with over 90% efficiency, flowing 120 gallons per hour while separating water from your fuel. The internal epoxy coating protects against corrosion and the low pressure drop reduces fuel flow restriction helping to prevent vapor-locking and stalling. This filter contains 25% more media than comparable aftermarket filters, providing longer life and improved water separation.

Quicksilver Branded

WATER SEPARATING FUEL FILTERS -GASOLINE

WATER SEPARATING FUEL FILTER KIT



35-802893A 4

Filter Kit, including filter canister and bracket. All Mercury, Mariner and Force outboards with a pulse driven fuel pump that do not already have a water separating fuel filter can gain benefit from this externally mounted kit. Degree of filtration is 25 micron. minimum.

Used in both outboard and MerCruiser applications (except 1992 MerCruiser 4.3 L Gen II engines equipped with an in-line fuel filter).

Mercury Branded, Box Point of Sale Packaged.

WATER SEPARATING FUEL FILTER KIT



35-802893Q 4

For gasoline use only. Degree of filtration is 25 micron, minimum.

Used in both outboard and MerCruiser applications (except 1992 MerCruiser 4.3 L Gen II engines equipped with an in-line fuel filter).

Quicksilver Branded, Box Point of Sale Packaged.

WATER SEPARATING FUEL FILTER KIT



35-8M0000493

For Mercury Racing 850, 1075 & 1200 SCi engines

Mercury Branded

WATER SEPARATING FUEL FILTER KIT



35-807172A 1

For gasoline use only.

For use on 1992 MCM 4.3L Gen II engines equipped with an in-line fuel filter.

FUEL FILTER



35-866594K01

10 micron

For MerCruiser 1.6L Vazer and 3.0L MPI EC engines

Mercury Branded, Box Point of Sale Packaged.

FUEL FILTER



35-866594Q01

10 micron

For MerCruiser 1.6L Vazer and 3.0L MPI EC engines

Quicksilver Branded, Box Point of Sale Packaged.

WATER SEPARATING FUEL FILTER



35-802893T

25 micron

Used in both outboard and MerCruiser applications (except 1992 MerCruiser 4.3 L Gen II engines equipped with an in-line fuel filter & 1.6L Vazer engines).

Mercury Branded, Box Point of Sale Packaged.

WATER SEPARATING FUEL FILTER



35-802893Q01

25 micron

Used in both outboard and MerCruiser applications (except 1992 MerCruiser 4.3 L Gen II engines equipped with an in-line fuel filter & 1.6L Vazer engines).

Priced individually, sold @ multiples of 6

Quicksilver Branded, Box Point of Sale Packaged.

WATER SEPARATING FUEL FILTER



35-8M0000202

Fits Mercury Racing 850, 1075 & 1200 SCi engines

Mercury Branded

WATER SEPARATING FUEL FILTER



892687A02

Replacement filter & canister

Fits 2004 and newer MCM/MIE engines with Gen III fuel cooler

WATER SEPARATING FUEL FILTER



35-8M0093688

Replacement filter

Fits 2004 and newer MCM/MIE engines with Gen III fuel cooler

WATER SEPARATING FILTER BRACKET



89876A 3

Includes brass fittings.

THREADED HOSE BARB



22- 89771T 2

For use with 5/16" (8 mm) I.D. hose and applications requiring a 1/4" NPT thread. Threads into our portable fuel tanks and will also work with our water separating filter bracket.

A .250 inch ID brass fitting for use with gasoline fuel only. This material should not be used with diesel fuels.

Priced individually, sold @ multiples of 2

Mercury Branded, Clamshell Package Point of Sale Packaged.

22- 89771Q 2

For use with 5/16" (8 mm) I.D. hose and applications requiring a 1/4" NPT thread. Threads into our portable fuel tanks and will also work with our water separating filter bracket.

A .250 inch ID brass fitting for use with gasoline fuel only. This material should not be used with diesel fuels.

Priced individually, sold @ multiples of 2

Quicksilver Branded, Clamshell Package Point of Sale Packaged.

THREADED HOSE BARB



22-8M0058419

For use with 5/16" (8 mm) I.D. hose and applications requiring a 1/4" NPT thread. Threads into our portable fuel tanks and will also work with our water separating filter bracket.

A stainless steel fitting for use with both gasoline and diesel fuel.
This fitting has a .300 inch ID.

FUEL LINE SNAPPER CLAMP



54- 41582T 7

For use with our gray color, 5/16 in. (8 mm) I.D. fuel line.

Priced individually, sold @ multiples of 2

Mercury Branded, Clamshell Package Point of Sale Packaged.

54- 41582Q 7

For use with our gray color, 5/16 in. (8 mm) I.D. fuel line.

Priced individually, sold @ multiples of 2

Quicksilver Branded, Clamshell Package Point of Sale Packaged.

WATER SEPARATING FUEL FILTERS -DIESEL

WATER SEPARATING FUEL FILTER



882376

Fits 1.7 MS 120

WATER SEPARATING FUEL FILTER



35-879172104

Fits all QSD 2.0, 2.8, & 4.2 engines

WATER SEPARATING FUEL FILTER



35-8M0103963

Fits 530D-TA/D183/D3.0L (s/n 0B993002-0D725459), 636D-TA/D219/D3.6L (s/n 0B993002-0F306929), and D254/D4.2L (s/n 0C489461-0F450249) diesel engines

WATER SEPARATING FUEL FILTER



35-807256T

Fits 2.8 EI & ES, D3.0L (s/n 0D725460 and up), D3.6L (s/n 0F306930 and up), and D4.2L (s/n 0F450250 and up)

WATER SEPARATING FUEL FILTER



35-880830T

Replacement element

Fits 4.2L MI & MS

WATER SEPARATING FUEL FILTER



35-808275

Fits D7.3L (s/n 0F060000 and up)

WATER SEPARATING FUEL FILTER



35-8M0067337

Replacement element

Fits MCM/MIE 1.9L, 2.5L, 3.0L V6 amd 4.2L V8 TDI diesel engines.

WATER SEPARATING FUEL FILTER



35-8M6002390

Fits MCM/MIE 4.2L V8 TDI 335 & 370 diesel engines (s/n CMC000200 & up)

RACOR WATER SEPARATING FUEL FILTERS - GASOLINE

These unique filters have a reusable bowl at the bottom of the filter. The bowl is made of metal to meet U.S. Coast Guard Regulations. These filters will flow up to 90 gallons (341 L) per hour and spin on existing MerCruiser and Volvo Penta inboards. Note: Clearance problems may occur in some instances. Check filter clearance prior to installation. For gasoline use. Can be mounted to filter bracket 89876A 3.

RACOR WATER SEPARATING FUEL FILTER



35-809100

Includes metal bowl.

All MCM/MIE models, except 1992 MCM 4.3L Gen II engines equipped with an in-line fuel filter. Degree of filtration is 10 micron.

RACOR WATER SEPARATING FUEL FILTER



35-809101

All MCM/MIE models, except 1992 MCM 4.3L Gen II engines equipped with an in-line fuel filter. Degree of filtration is 10 micron.

RACOR WATER SEPARATING FUEL FILTERS - DIESEL

10 micron filter

RACOR WATER SEPARATING FUEL FILTER



35-850481

3/4 in.(19 mm) - 16 SAE thread inlet and outlet

For diesel engines

35-809867

14 mm thread inlet and outlet

For diesel engines

RACOR WATER SEPARATING FUEL FILTER



35-809868T

Replacement Racor 10 micron element

For diesel engines with Racor water separating fuel filter

SEAWATER PICKUPS

SEAWATER PICKUP



88845A 1

Transom mount, for 1-1/4 in.(32 mm) hose.

Fits any sterndrive engine that has an engine mounted seawater pump.

SEAWATER PICKUP



22-8M0102849

Transom mount, for 1-1/2 in.(38 mm) hose.

Primarily used on diesel engines with 1-1/2 in.(38 mm) seawater inlet hose.

NEW

SEAWATER PICKUP



22-818170A 2

Bronze, thru hull mount with seacock, 1-1/2 in.(38 mm) pipe size.

Primarily used on diesel applications with 1-1/2 in.(38 mm) seawater inlet hose

SEAWATER PICKUP

Image not Available.

8M0113313

Bronze, thru hull mount, 2" (51 mm) pipe size

Primarily used on diesel applications with 2" (51 mm) seawater hose

NEW

SEAWATER STRAINER

SEAWATER STRAINER



35-860603

Primarily used on diesel applications. For use with 1-1/2 in. (38 mm) I.D. seawater inlet hose. Order 1-1/2 in. (38 mm) barb fittings separately p/n 22-816339.

FITTING



22-816339

1-1/2 in.(38 mm) barb fitting for use with seawater strainer 35-860603

WATER PRESSURE RELIEF VALVE KIT

WATER PRESSURE RELIEF VALVE KIT



863208A 3

The purpose of this kit is to regulate engine block water pressure to a maximum of 30 psi and vent excess water overboard.

Fits all MCM engines in high performance applications where engine block water pressures are exceeding the maximum 30 psi.

CHECK VALVE KIT

CHECK VALVE KIT



864206A02

Prevents the discharge of engine cooling water through the drive unit during short term storage conditions.

Fits 2005 and newer MCM V-8 (305, 350 & 377 cid) MPI Bravo engines with standard cooling and Gen III fuel cool (s/n 0W060000 and up). Not for use with Axius engines.

CHECK VALVE KIT



864206A03

Prevents the discharge of engine cooling water through the drive unit during short term storage conditions.

Fits 2005 and newer MCM V-8 (305, 350 & 377 cid) MPI Bravo engines with closed cooling and Gen III fuel cool (s/n 0W060000 and up). Not for use with Axius engines.

OPTIONAL FRONT ENGINE MOUNT

FRONT ENGINE MOUNT



76409F 1

6-1/2 in.(165 mm) centers by 5-7/8 in.(149 mm) high.

Fits MCM 120, 140, 2.5L & 3.0L/LX

PROPELLER SHAFT COUPLERS FOR MIE ONLY

Includes set screw and through bolts.

PROPELLER SHAFT COUPLER



79476A 1

5 in.(127 mm) diameter flange, 1 in.(25 mm) diameter bore

Fits Borg Warner 71 series Inline - 1.5:1, 2:1, 2.5:1, or 3:1 ratio; Borg Warner 71 series V-Drives; all 72 series; and all Hurth series transmissions

79476A 3

5 in.(127 mm) diameter flange, 1-1/4 in.(32 mm) diameter bore

Fits Borg Warner 71 series Inline - 1.5:1, 2:1, 2.5:1, or 3:1 ratio; Borg Warner 71 series V-Drives; all 72 series; and all Hurth series transmissions

79476A 4

5 in.(127 mm) diameter flange, 1-3/8 in.(35 mm) diameter bore

Fits Borg Warner 71 series Inline - 1.5:1, 2:1, 2.5:1, or 3:1 ratio; Borg Warner 71 series V-Drives; all 72 series; and all Hurth series transmissions

79476A 5

5 in.(127 mm) diameter flange, 1-1/2 in.(38 mm) diameter bore

Fits Borg Warner 71 series Inline - 1.5:1, 2:1, 2.5:1, or 3:1 ratio; Borg Warner 71 series V-Drives; all 72 series; and all Hurth series transmissions

79476A 6

5 in.(127 mm) diameter flange, 1-3/4 in.(44 mm) diameter bore

Fits Borg Warner 71 series Inline - 1.5:1, 2:1, 2.5:1, or 3:1 ratio; Borg Warner 71 series V-Drives; all 72 series; and all Hurth series transmissions

GEAR HOUSING REPLACEMENT SKEGS

REPLACEMENT SKEG



90185A 1

Will not fit original Alpha One drives

For MCM Alpha One Gen II drives (s/n 0D469859 and above)

REPLACEMENT SKEG



815632A02

For MCM Bravo One & Bravo Three drives

REPLACEMENT SKEG



806688A02

For MCM Bravo Two drives

REPLACEMENT SKEG



15985A02

Precision die cast 360XK alloy for stronger, more uniform welds.

Fits Mercury / Mariner 50/55/60 Bigfoot (3 cyl.), 70/75/80/90 (USA 0A996142 and Newer, BEL 9483121 and Newer), 100/115/125 (0B209468 and Newer), Force 90/120 (s/n 0E093700 and Newer) and 75/90/115 FourStroke (1B366823-2B094955).

TRANSOM ADAPTER KIT

For use when replacing a Volvo or BMW sterndrive with a new standard MCM Alpha or Bravo sterndrive. It provides a rugged mounting that seals the competitors" larger transom cutouts and eliminates costly rework to fiberglass, aluminum, or steel transoms.

TRANSOM ADAPTER KIT



827691A 1

For use when replacing a Volvo or BMW sterndrive with a standard MerCrusier Alpha or Bravo sterndrive assembly. This kit provides a rugged mounting support that seals the competitors' larger transom cutouts and eliminates costly rework to fiberglass, aluminum, or steel transoms.

GALVANIC ISOLATOR KIT

Galvantically isolates a boat from all metals ashore as well as from other boats that are plugged into the same shore power circuit. The Galvanic Isolator is rated up to 60 amps capable of handing two 30 amp shore power circuits. The Monitor continually monitors the Galvanic Isolator, boat wiring and shore power wiring for faults. The Display provides both an audible and visual alarm if fault is detected. An added feature of the Monitor and Display is corrosion protection by supplying impressed current into the water, similar to the MerCathode system.

GALVANIC ISOLATOR, MONITOR & DISPLAY KIT



888557Q01

Rated up to 60 amps

Fits all boats equipped with 120 Volt A.C. shore power. Meets ABYC A-28 requirements.

GALVANIC ISOLATOR



888557T01

Rated up to 60 amps - capable of handling two 30 amp shore power circuits.

MERCATHODE

Automatically protects the sterndrive from galvanic corrosion. A solid state device that operates off a 12 voltThe increased output provides greater protection for underwater aluminum parts. Its reliable, efficient operation requires an insignificant amount of current when protection is needed.

MERCATHODE KIT



8M0089497

Anode/reference electrode unit mounts in place of zinc anode under the gimbal housing, eliminating the need to drill holes through the transom. The new black Gen III MerCathode controller with the red decal is mounted inside the boat.

Fits the 4.5L V6 Alpha and Bravo drives.

MERCATHODE KIT



8M0085693

Anode/reference electrode unit mounts in place of zinc anode under the gimbal housing, eliminating the need to drill holes through the transom. The new black Gen III Mercathode controller with the blue decal is mounted inside the boat.

Fits R, MR, Alpha One & Gen II, and Bravo drives.

MERCATHODE KIT



42600A14

Kit includes the new black Gen III MerCathode controller with the red decal and 2 transom mounted anodes for boats requiring additional corrosion protection. This kit is used in conjunction with gimbal mounted anode/reference electrode unit p/n 98869A14. The new MerCathode controller replaces the existing blue controller mounted inside the boat.

Fits R, MR, Alpha One, Gen II & Bravo drives

MERCATHODE KIT



88334A 2

Transom mounted system is mounted with the anode and reference electrode on (and through) the transom of the boat on opposite sides of the drive. The new Gen III Mercahode controller with the blue decal is mounted inside the boat.

Fits all boat applications with a 12 volt operating system.

MERCATHODE CONTROL UNIT



8M0100517

Black Gen III controller with red decal.

Fits R, MR, Alpha One & Gen II, and Bravo drives.

MERCATHODE CONTROL UNIT



42600A09

Black Gen IIi MerCathode controller with blue decal and attaching hardware only. To be connected in parallel with 98869A14 Mercathode systems for certain salt water applications.

Fits R, MR, Alpha One & Gen II, and Bravo drives.

MERCATHODE ANODE



72957A 5

Replacement anode assembly for 88334 series Mercathode systems.

MERCATHODE ELECTRODE



72958A 5

Replacement electrode assembly for 88334 series Mercathode systems.

MERCATHODE REFERENCE ELECTRODE TESTER



91- 76675T 1

Use with a digital multimeter to test the function of Mercathode systems

ANODES KITS

ANODE KIT



888756K02

Aluminum anodes - For use in saltwater or freshwater.
Fits 1984-1990 MR & Alpha One drives (s/n 6225577-0D469828)
Mercury Branded, Box Point of Sale Packaged.

888756Q04

Aluminum anodes - For use in saltwater or freshwater.
Fits 1984-1990 MR & Alpha One drives (s/n 6225577-0D469828)
Quicksilver Branded, Box Point of Sale Packaged.

888755K02

Magnesium anodes - For freshwater use only. Do not use in saltwater applications.
Fits 1984-1990 MR & Alpha One drives (s/n 6225577-0D469828)
Mercury Branded, Box Point of Sale Packaged.

888755Q04

Magnesium anodes - For freshwater use only. Do not use in saltwater applications.
Fits 1984-1990 MR & Alpha One drives (s/n 6225577-0D469828)
Quicksilver Branded, Box Point of Sale Packaged.

ANODE KIT



888756K01

Aluminum anodes - For use in saltwater or freshwater.
Fits 1991 and newer Alpha One Gen II drives (s/n 0D469829 and up)
Mercury Branded, Box Point of Sale Packaged.

888756Q03

Aluminum anodes - For use in saltwater or freshwater.
Fits 1991 and newer Alpha One Gen II drives (s/n 0D469829 and up)
Quicksilver Branded, Box Point of Sale Packaged.

888755K01

Magnesium anodes - For freshwater use only. Do not use in saltwater applications.
Fits 1991 and newer Alpha One Gen II drives (s/n 0D469829 and up)
Mercury Branded, Box Point of Sale Packaged.

888755Q03

Magnesium anodes - For freshwater use only. Do not use in saltwater applications.
Fits 1991 and newer Alpha One Gen II drives (s/n 0D469829 and up)
Quicksilver Branded, Box Point of Sale Packaged.

ANODE KIT



888758K01

Aluminum anodes - For use in saltwater or freshwater.
Fits 1988 and newer Bravo One drives (s/n 0B66190 and up)
Mercury Branded, Box Point of Sale Packaged.

888758Q02

Aluminum anodes - For use in saltwater or freshwater.
Fits 1988 and newer Bravo One drives (s/n 0B66190 and up)
Quicksilver Branded, Box Point of Sale Packaged.

888757K01

Magnesium anodes - For freshwater use only. Do not use in saltwater applications.
Fits 1988 and newer Bravo One drives (s/n 0B66190 and up)
Mercury Branded, Box Point of Sale Packaged.

888757Q02

Magnesium anodes - For freshwater use only. Do not use in saltwater applications.
Fits 1988 and newer Bravo One drives (s/n 0B66190 and up)
Quicksilver Branded, Box Point of Sale Packaged.

ANODE KIT



888761K01

Aluminum anodes - For use in saltwater or freshwater
Fits 1988 and newer Bravo II drives (s/n 0B664190 and up)
Fits 1995-2002 Bravo III drives (s/n 0F345868-0M179451)
Mercury Branded, Box Point of Sale Packaged.

888761Q03

Aluminum anodes - For use in saltwater or freshwater.
Fits 1988 and newer Bravo II drives (s/n 0B664190 and up)
Fits 1995-2002 Bravo III drives (s/n 0F345868-0M179451)
Quicksilver Branded, Box Point of Sale Packaged.

888760K01

Magnesium anodes - For freshwater use only. Do not use in saltwater applications.
Fits 1988 and newer Bravo II drives (s/n 0B664190 and up)
Fits 1995-2002 Bravo III drives (s/n 0F345868-0M179451)
Mercury Branded, Box Point of Sale Packaged.

888760Q03

Magnesium anodes - For freshwater use only. Do not use in saltwater applications.
Fits 1988 and newer Bravo II drives (s/n 0B664190 and up)
Fits 1995-2002 Bravo III drives (s/n 0F345868-0M179451)
Quicksilver Branded, Box Point of Sale Packaged.

ANODE KIT



888761K02

Aluminum anodes - For use in saltwater or freshwater.
Fits 2003 and newer Bravo III drives (s/n 0M179452 and up)
Mercury Branded, Box Point of Sale Packaged.

888761Q04

Aluminum anodes - For use in saltwater or freshwater.
Fits 2003 and newer Bravo III drives (s/n 0M179452 and up)
Quicksilver Branded, Box Point of Sale Packaged.

888760K02

Magnesium anodes - For freshwater use only. Do not use in saltwater applications.
Fits 2003 and newer Bravo III drives (s/n 0M179452 and up)
Mercury Branded, Box Point of Sale Packaged.

888760Q04

Magnesium anodes - For freshwater use only. Do not use in saltwater applications.
Fits 2003 and newer Bravo III drives (s/n 0M179452 and up)
Quicksilver Branded, Box Point of Sale Packaged.

ANODES - TRANSOM

ANODIC PLATE



34762A 1

Zinc

ANODE KIT



55989T 9

Aluminum
Fits MC-I, R, MR, Alpha and Bravo drives (s/n 0D469828 and below)
Priced individually, sold @ multiples of 2
Mercury Branded, Clamshell Package Point of Sale Packaged.

55989Q 9

Aluminum
Fits MC-I, R, MR, Alpha and Bravo drives (s/n 0D469828 and below)
Priced individually, sold @ multiples of 2
Quicksilver Branded, Clamshell Package Point of Sale Packaged.

55989T 3

Magnesium - For freshwater use only. Do not use in saltwater applications.
Fits MC-I drives

GIMBAL HOUSING ANODE



866698

Fits Vazer drives

GIMBAL HOUSING ANODE



821631T 1

Aluminum
Fits R, MR, Alpha One, Gen II, Bravo I, II, III, X, XR & XZ drives.
Priced individually, sold @ multiples of 2
Mercury Branded, Clamshell Package Point of Sale Packaged.

821631Q 1

Aluminum
Fits R, MR, Alpha One, Gen II, Bravo I, II, III, X, XR & XZ drives.
Priced individually, sold @ multiples of 2
Quicksilver Branded, Clamshell Package Point of Sale Packaged.

821631T 3

Magnesium - For freshwater use only. Do not use in saltwater applications.
Fits R, MR, Alpha One, Gen II, Bravo I, II, III, X, XR & XZ drives.

ANODE-HANGING



809690A 1

Aluminum
Provides additional corrosion protection when boat is at mooring. Fits all applications when hung over side of the boat.

ANODES - DRIVESHAFT HOUSING

DRIVESHAFT HOUSING ANODE



821629T 1

Aluminum
Fits Alpha One Gen II drives.
Mercury Branded, Clamshell Package Point of Sale Packaged.

821629Q 1

Aluminum
Fits Alpha One Gen II drives.
Quicksilver Branded, Clamshell Package Point of Sale Packaged.

821629A 2

Magnesium - For freshwater use only. Do not use in saltwater applications.
Fits Alpha One Gen II drives.

DRIVESHAFT HOUSING ANODE



821630T 1

Aluminum
Fits Bravo I, II, III, X XR & XZ drives.
Mercury Branded, Clamshell Package Point of Sale Packaged.

821630Q 1

Aluminum
Fits Bravo I, II, III, X, XR & XZ drives.
Quicksilver Branded, Clamshell Package Point of Sale Packaged.

821630A 2

Magnesium - For freshwater use only. Do not use in saltwater applications.
Fits Bravo I, II, III, X, XR & XZ drives

ANODES - PROPELLER

PROP NUT ANODE KIT



809664A 1

1-1/8 in. Shaft, 3/4 in. NF 16
Fits Mercury/Mariner 70 hp and higher outboards (except 225 EFI FourStroke); Also fits MC-I, R, MR, Alpha, Bravo One & TRS sterndrives (1970 & newer)

PROP NUT ANODE KIT



809666A02

Aluminum, For use in saltwater or freshwater.
1-3/8 in. Shaft, 1 in. NF 14
Fits Bravo III drives (s/n 0M179451 and below)

809666A03

Magnesium, For use in freshwater only.
1-3/8 in. Shaft, 1 in. NF 14
Fits Bravo III drives (s/n 0M179451 and below)

REPLACEMENT PROP NUT ANODE



809662T

2 in. Aluminum Anode Shell
Replacement Shell for 809662A 1

REPLACEMENT PROP NUT ANODE



809666T

2-5/16 in. Aluminum Anode Shell
Replacement Shell for 809666A 1and 809666A02

809666T01

2-5/16 in. Magnesium Anode Shell
Replacement Shell for 809666A03

REPLACEMENT PROP NUT ANODE



809670T

2-1/2 in. Aluminum Anode Shell
Replacement Shell for 809670A 1

PROP NUT ANODE



865182Q01

Aluminum
Fits Bravo III (s/n 0M179452 and up)
Quicksilver Branded, Clamshell Package Point of Sale Packaged.

865182A02

Magnesium - For freshwater use only. Do not use in saltwater applications.
Fits Bravo III (s/n 0M179452 and up)

ANODE CHART - PROPELLER NUT

Prop Nut Anodes

Thread Size/ per inch	Shaft Size	Zinc Size	Outside Diameter	Space Pounds	Space Grams	Complete Pounds	Complete Grams	Anodic Prop Nut Kit	Replacement Prop Nut Anode
1/2 inch NC 13	3/4 inch	A	1-1/4 inch	.20	90.9	.34	154.5	N.L.A.	N.L.A.
5/8 inch NC 11	7/8 inch	B	1-5/8 inch	.50	227.27	.82	372.7	N.L.A.	N.L.A.
3/4 inch NC 10	1 inch	C	2 inch	1.06	481.8	1.55	704.5	N.L.A.	809662T
3/4 inch NF 16	1 inch	C	2 inch	1.06	481.8	1.55	704.5	809664A 1	809662T
7/8 inch NC 9	1-1/4 inch	D	2-5/16 inch	1.50	681.8	2.20	999.9	N.L.A.	809666T
7/8 inch NF 14	1-1/4 inch	D	2-5/16 inch	1.50	681.8	2.20	999.9	N.L.A.	809666T
1 inch NF 14	1-3/8 inch	E	2-1/2 inch	1.70	772.7	2.55	1159	N.L.A.	809670T
1-1/8 inch NC 7	1-1/2 inch	F	2-3/4 inch	2.00	909.0	3.20	1454	N.L.A.	N.L.A.

ANODES - GEAR HOUSING

TRIM TAB



31640T 4

Aluminum

Fits most Mercury/Mariner outboards 35 hp. & above and all MerCruiser except Bravo. Check for adequate propeller clearance prior to operation.

Mercury Branded, Clamshell Package Point of Sale Packaged.

31640Q 4

Aluminum

Fits most Mercury/Mariner outboards 35 hp. & above and all MerCruiser except Bravo. Check for adequate propeller clearance prior to operation.

Quicksilver Branded, Clamshell Package Point of Sale Packaged.

31640T 6

Magnesium - For freshwater use only. Do not use in Saltwater applications.

Fits most Mercury/Mariner outboards 35 hp. & above and all MerCruiser except Bravo. Check for adequate propeller clearance prior to operation.

TRIM TAB



34127T 2

Zinc

An optional trim tab for R, MR and Alpha One drives. Provides increased steering torque reduction for non-power steering applications. Will not work with Black Max or other high rake propellers.

ANODIC PLATE



76214T 5

Aluminum
Provides additional clearance for high rake propellers.

Fits Mercury/Mariner 35-300hp, Force 90 & 120hp 1995 and newer, MerCruiser Alpha One Gen II and Bravo I, II, III, X XR & XZ drives.

Priced individually, sold @ multiples of 2

Mercury Branded, Clamshell Package Point of Sale Packaged.

76214Q 5

Aluminum
Provides additional clearance for high rake propellers.

Fits Mercury/Mariner 35-300hp, Force 90 & 120hp 1995 and newer, MerCruiser Alpha One Gen II and Bravo I, II, III, X XR & XZ drives.

Priced individually, sold @ multiples of 2

Quicksilver Branded, Clamshell Package Point of Sale Packaged.

76214A 6

Magnesium - For freshwater use only. Do not use in saltwater applications.
Fits Mercury/Mariner 35-300 HP, Force 90 & 120 HP 1995 and newer, MerCruiser Alpha One Generation II and Bravo I, II and III drives.

TRIM TAB ANODE



822777T 1

Aluminum
For applications where extra clearance is required for high rake propellers.
Fits most Mercury/Mariner 35 hp and above, Force 90/120 (1995 and newer), and all Mercury MerCruiser engines.
Mercury Branded, Clamshell Package Point of Sale Packaged.

822777Q 1

Aluminum
For applications where extra clearance is required for high rake propellers.
Fits most Mercury/Mariner 35 hp and above, Force 90/120 (1995 and newer), and all Mercury MerCruiser engines.
Quicksilver Branded, Clamshell Package Point of Sale Packaged.

822777A 2

Magnesium - For freshwater use only. Do not use in saltwater applications.
Fits most Mercury/Mariner 35 hp and above, Force 90/120 (1995 and newer), and all Mercury MerCruiser engines.

ANODIC PLATE



76214 4

Aluminum
Fits Bravo III with 2 pc. anti-ventilation plate
Fits Bravo III w/ 1 pc housing (s/n 0M179452 and up)
Fits Vazer

76214 6

Magnesium - For freshwater use only. Do not use in saltwater applications.
Fits Bravo III with 2 pc. anti-ventilation plate

ANODE



806187A 1

Aluminum
Fits BlackHawk

ANODE



847635

Aluminum
Fits SSM VI & VII

BEARING CARRIER ANODE



806105T 1

Aluminum
Fits Alpha One Gen II and Vazer drives
Priced individually, sold @ multiples of 2
Mercury Branded, Clamshell Package Point of Sale Packaged.

806105Q 1

Aluminum
Fits Alpha One Gen II and Vazer drives.
Priced individually, sold @ multiples of 2
Quicksilver Branded, Clamshell Package Point of Sale Packaged.

BEARING CARRIER ANODE



806188K01
Aluminum
Fits Bravo I
Mercury Branded, Clamshell Package Point of Sale Packaged.

806188Q01
Aluminum
Fits Bravo I
Quicksilver Branded, Clamshell Package Point of Sale Packaged.

806188A 2
Magnesium - For freshwater use only. Do not use in saltwater applications.
Fits Bravo I

PROP NUT ANODE



865182Q01
Aluminum
Fits Bravo III (s/n 0M179452 and up)
Quicksilver Branded, Clamshell Package Point of Sale Packaged.

865182A02
Magnesium - For freshwater use only. Do not use in saltwater applications.
Fits Bravo III (s/n 0M179452 and up)

ANODES - TRIM CYLINDER

TRIM CYLINDER ANODE



806189T 1
Aluminum
Fits Alpha One Gen II drives.
Priced individually, sold @ multiples of 2
Mercury Branded, Clamshell Package Point of Sale Packaged.

806189Q 1
Aluminum
Fits Alpha One Gen II drives.
Priced individually, sold @ multiples of 2
Quicksilver Branded, Clamshell Package Point of Sale Packaged.

806189A 2
Magnesium - For freshwater use only. Do not use in saltwater applications.
Fits Alpha One Gen II drives

ANODE BULK PAK

8M0059341
40 Aluminum Trim Cylinder Anodes per box. Equivalent to the individually packaged 806189Q1/T1.
NOTE: Does not include the mounting hardware.
Fits Alpha One Gen II drives.

TRIM CYLINDER ANODE



806190T 1
Aluminum
Fits Vazer and Bravo I, II, III, X, XR, XZ and Blackhawk drives.
Priced individually, sold @ multiples of 2
Mercury Branded, Clamshell Package Point of Sale Packaged.

806190Q 1
Aluminum
Fits Vazer and Bravo I, II, III, X, XR, XZ and Blackhawk drives.
Priced individually, sold @ multiples of 2
Quicksilver Branded, Clamshell Package Point of Sale Packaged.

806190A 2
Magnesium - For freshwater use only. Do not use in saltwater applications.
Fits Vazer and Bravo I, II, III, X, XR, XZ and Blackhawk drives.

ANODE BULK PAK

8M0059342
40 Aluminum Trim Cylinder Anodes per box. Equivalent to the individually packaged 806190Q1/T1.
NOTE: Does not include the mounting hardware.
Fits Vazer and Bravo I, II, III, X, XR, XZ and Blackhawk drives.

TRIM CYLINDER ANODE



8M2000017
Fits to the front of the Vazer trim clyinders

ANODE - ENGINE

ENGINE ANODE ASSEMBLY



879194217

M18 x 1.5 Plug w/ thread-in anode (20mm length x 15mm O.D.)
Fits 2.0L, 2.8L, 3.0L & 4.2L in-line diesel engines

ANODE - HEAT EXCHANGER

HEAT EXCHANGER ANODE



806000

3/8-18 NPT Plug w/ thread-in anode (32mm length x 13mm O.D.)
Fits 1994-2009 D2.8L, D3.0L, D3.6L & D4.2L in-line diesel engine heat exchangers, Also fits Racing 850 SCi, 1025 SCi, 1075 SCi & 1200SCi oil cooler housing.

ANODE CHART - MERCRUISER

MerCruiser Anodes

Model	Year Range	Serial # Range	Gimbal Anodic Pate	Mat.	Gimbal Anodic Bolt Head	Mat.	Anodic trim Tab/ Plate	Mat.	Anodic Trim Tab (Opt.)	Mat.	D/S Hsg. Anodic Plate	Mat.	Trim Cylinder Anode	Mat.	Bearing Carrier Anode	Mat.	Anodic Prop Nut Kit	Prop Nut Anode Only
60	1965 - 1966	1830753 - 2063740	34762A 1	Zinc	N/A		31640T 4	Alum.	N/A		N/A		N/A		N/A		N.L.A.	N.L.A.
60	1965 - 1966	1830753 - 2063740	34762A 1	Zinc	N/A		31640T 6	Magn.	N/A		N/A		N/A		N/A		N.L.A.	N.L.A.
80	1966 - 1969	2063741 - 2898029	34762A 1	Zinc	N/A		N.L.A.		N/A		N/A		N/A		N/A		N.L.A.	809662T
90	1970 - 1972	2898020 - 3225967	34762A 1	Zinc	N/A		N.L.A.		N/A		N/A		N/A		N/A		N.L.A.	809662T
I	1963	1534570 - 1684187	34762A 1	Zinc	N/A		34127T 2	Zinc	N/A		N/A		N/A		N/A		N.L.A.	809662T
IA/IB/IC	1964	1684188 - 1777798	34762A 1	Zinc	N/A		31640T 4	Alum.	34127T 2	Zinc	N/A		N/A		N/A		N.L.A.	809662T
IA/IB/IC	1964	1684188 - 1777798	34762A 1	Zinc	N/A		31640T 6	Magn.	N/A		N/A		N/A		N/A		N.L.A.	809662T
IA/IB/IC (EZ-Shift)	1965 - 1966	1776349 - 2065189	34762A 1	Zinc	N/A		31640T 4	Alum.	34127T 2	Zinc	N/A		N/A		N/A		N.L.A.	809662T
IA/IB/IC (EZ-Shift)	1965 - 1966	1776349 - 2065189	34762A 1	Zinc	N/A		31640T 6	Magn.	N/A		N/A		N/A		N/A		N.L.A.	809662T
120/140	1967 - 1969	2062141 - 2791956	34762A 1	Zinc	N/A		31640T 4	Alum.	N/A		N/A		N/A		N/A		N.L.A.	809662T
120/140	1967 - 1969	2062141 - 2791956	34762A 1	Zinc	N/A		31640T 6	Magn.	N/A		N/A		N/A		N/A		N.L.A.	809662T
120/140	1970 - 1977	2791957 - 4893634	N/A		55989Q 9	Alum.	31640T 4	Alum.	N/A		N/A		N/A		N/A		809664A 1	809662T
120/140	1970 - 1977	2791957 - 4893634	N/A		55989T 3	Magn.	31640T 6	Magn.	N/A		N/A		N/A		N/A		809664A 1	809662T
120/140	1978 - 1982	4893635 - 6225576	N/A		55989Q 9	Alum.	31640T 4	Alum.	34127T 2	Zinc	N/A		N/A		N/A		809664A 1	809662T
120/140	1978 - 1982	4893635 - 6225576	N/A		55989T 3	Magn.	31640T 6	Magn.	N/A		N/A		N/A		N/A		809664A 1	809662T
160	1967 - 1969	2065190 - 2763441	34762A 1	Zinc	N/A		34127T 2	Zinc	N/A		N/A		N/A		N/A		N.L.A.	809662T
165	1970 - 1977	2763442 - 4890459	N/A		55989Q 9	Alum.	34127T 2	Zinc	N/A		N/A		N/A		N/A		809664A 1	809662T
165	1978 - 1981	4890460 - 6268064	N/A		55989Q 9	Alum.	31640T 4	Alum.	34127T 2	Zinc	N/A		N/A		N/A		809664A 1	809662T
165	1978 - 1981	4890460 - 6268064	N/A		55989T 3	Magn.	31640T 6	Magn.	N/A		N/A		N/A		N/A		809664A 1	809662T
II	1962 - 1967	1474909 - 2278488	N/A		N/A		31640T 4	Alum.	N/A		N/A		N/A		N/A		N.L.A.	809666T
II	1962 - 1967	1474909 - 2278488	N/A		N/A		31640T 6	Magn.	N/A		N/A		N/A		N/A		N.L.A.	809666T
II (1.78:1)	1969	2507945 - 2671321	N/A		N/A		31640T 4	Alum.	N/A		N/A		N/A		N/A		N.L.A.	809666T
II (1.78:1)	1969	2507945 - 2671321	N/A		N/A		31640T 6	Magn.	N/A		N/A		N/A		N/A		N.L.A.	809666T
III	1968 - 1969	2373127 - 3002613	34762A 1	Zinc	N/A		34127T 2	Zinc	N/A		N/A		N/A		N/A		N.L.A.	809670T
215E	1970 - 1972	2909035 - 2915034	34762A 1	Zinc	N/A		31640T 4	Alum.	N/A		N/A		N/A		N/A		N.L.A.	809670T
215E	1970 - 1972	2909035 - 2915034	34762A 1	Zinc	N/A		31640T 6	Magn.	N/A		N/A		N/A		N/A		N.L.A.	809670T
215H	1970	2782203 - 2909034	34762A 1	Zinc	N/A		34127T 2	Zinc	N/A		N/A		N/A		N/A		N.L.A.	809670T
225-S	1974	3856268 - 4200499	N/A		55989Q 9	Alum.	31640T 4	Alum.	34127T 2	Zinc	N/A		N/A		N/A		809664A 1	809662T
225-S	1974	3856268 - 4200499	N/A		55989T 3	Magn.	31640T 6	Magn.	N/A		N/A		N/A		N/A		809664A 1	809662T
228	1977 - 1982	4782330 - 6229157	N/A		55989Q 9	Alum.	31640T 4	Alum.	34127T 2	Zinc	N/A		N/A		N/A		809664A 1	809662T
228	1977 - 1982	4782330 - 6229157	N/A		55989T 3	Magn.	31640T 6	Magn.	N/A		N/A		N/A		N/A		809664A 1	809662T
233	1975 - 1977	4200500 - 4782329	N/A		55989Q 9	Alum.	31640T 4	Alum.	34127T 2	Zinc	N/A		N/A		N/A		809664A 1	809662T
233	1975 - 1977	4200500 - 4782329	N/A		55989T 3	Magn.	31640T 6	Magn.	N/A		N/A		N/A		N/A		809664A 1	809662T
250	1977	4791300 - 4898729	N/A		55989Q 9	Alum.	31640T 4	Alum.	N/A		N/A		N/A		N/A		809664A 1	809662T
250	1977	4791300 - 4898729	N/A		55989T 3	Magn.	31640T 6	Magn.	N/A		N/A		N/A		N/A		809664A 1	809662T

MERCRUISER

MERCURY MerCNET

Model	Year Range	Serial # Range	Gimbal Anodic Pate	Mat.	Gimbal Anodic Bolt Head	Mat.	Anodic trim Tab/ Plate	Mat.	Anodic Trim Tab (Opt.)	Mat.	D/S Hsg. Anodic Plate	Mat.	Trim Cylinder Anode	Mat.	Bearing Carrier Anode	Mat.	Anodic Prop Nut Kit	Prop Nut Anode Only
II-TR	1973 - 1976	3377316 - 4794899	34762A 1	Zinc	N/A		31640T 4	Alum.	N/A		N/A		N/A		N/A		N.L.A.	809670T
II-TR	1973 - 1976	3377316 - 4794899	34762A 1	Zinc	N/A		31640T 6	Magn.	N/A		N/A		N/A		N/A		N.L.A.	809670T
255-TRS	1973 - 1974	3377316 - 4203749	34762A 1	Zinc	N/A		31640T 4	Alum.	N/A		N/A		N/A		N/A		809664A 1	809662T
255-TRS	1973 - 1974	3377316 - 4203749	34762A 1	Zinc	N/A		31640T 6	Magn.	N/A		N/A		N/A		N/A		809664A 1	809662T
260	1978 - 1982	4898730 - 6229157	N/A		55989Q 9	Alum.	31640T 4	Alum.	34127T 2	Zinc	N/A		N/A		N/A		809664A 1	809662T
260	1978 - 1982	4898730 - 6229157	N/A		55989T 3	Magn.	31640T 6	Magn.	N/A		N/A		N/A		N/A		809664A 1	809662T
280-TRS	1975 - 1976	4203750 - 4895399	34762A 1	Zinc	N/A		31640T 4	Alum.	N/A		N/A		N/A		N/A		809664A 1	809662T
280-TRS	1975 - 1976	4203750 - 4895399	34762A 1	Zinc	N/A		31640T 6	Magn.	N/A		N/A		N/A		N/A		809664A 1	809662T
470	1976 - 1882	4208730 - 6225576	N/A		55989Q 9	Alum.	31640T 4	Alum.	34127T 2	Zinc	N/A		N/A		N/A		809664A 1	809662T
470	1976 - 1882	4208730 - 6225576	N/A		55989T 3	Magn.	31640T 6	Magn.	N/A		N/A		N/A		N/A		809664A 1	809662T
485	1980 - 1982	5487437 - 6225576	N/A		55989Q 9	Alum.	31640T 4	Alum.	34127T 2	Zinc	N/A		N/A		N/A		809664A 1	809662T
485	1980 - 1982	5487437 - 6225576	N/A		55989T 3	Magn.	31640T 6	Magn.	N/A		N/A		N/A		N/A		809664A 1	809662T
888	1971 - 1977	3106717 and up	N/A		55989Q 9	Alum.	31640T 4	Alum.	34127T 2	Zinc	N/A		N/A		N/A		809664A 1	809662T
888	1971 - 1977	3106717 and up	N/A		55989T 3	Magn.	31640T 6	Magn.	N/A		N/A		N/A		N/A		809664A 1	809662T
R/MR/Alpha One	1983 - 1989	6225577 - 0D469858	821631T 1	Alum.	55989Q 9	Alum.	31640T 4	Alum.	34127T 2	Zinc	N/A		N/A		N/A		809664A 1	809662T
R/MR/Alpha One	1983 - 1989	6225577 - 0D469858	821631T 3	Magn.	55989T 3	Magn.	31640T 6	Magn.	N/A		N/A		N/A		N/A		809664A 1	809662T
Alpha One (Gen.II)	1991 - 2016	0D469859 and up	821631T 1	Alum.	N/A		76214T 5	Alum.	31640T 4	Alum.	821629T 1	Alum.	806189T 1	Alum.	806105T 1	Alum.	809664A 1	809662T
Alpha One (Gen.II)	1991 - 2016	0D469859 and up	821631T 3	Magn.	N/A		76214A 6	Magn.	31640T 6	Magn.	821629A 2	Magn.	806189A 2	Magn.	N.L.A.	Magn.	809664A 1	809662T
Alpha One SS	1986 - 1989	0A545004 and up	N/A		55989Q 9	Alum.	822777T 1	Alum.	N/A		N/A		N/A		N/A		809664A 1	809662T
Alpha One SS	1986 - 1989	0A545004 and up	N/A		55989Q 9	Magn.	822777A 2	Magn.	N/A		N/A		N/A		N/A		809664A 1	809662T
Vazer	2007 - 2008	0W995000 and up	866698	Alum	N/A		76214 4	Alum.	N/A		8M2000017		806190T 1	Alum.	806105T 1	Alum.	809664A 1	809662T
Bravo One	1988 - 2016	0B664190 and up	821631T 1	Alum.	N/A		76214T 5	Alum.	N/A		821630T 1	Alum.	806190T 1	Alum.	806188K01	Alum.	809664A 1	809662T
Bravo One	1988 - 2016	0B664190 and up	821631T 3	Magn.	N/A		76214A 6	Magn.	N/A		821630A 2	Magn.	806190A 2	Magn.	806188A 2	Mag.	809664A 1	809662T
Bravo Two	1989 - 2016	0C564952 and up	821631T 1	Alum.	N/A		76214T 5	Alum.	N/A		821630T 1	Alum.	806190T 1	Alum.	N/A		N.L.A.	809670T
Bravo Two	1989 - 2016	0C564952 and up	821631T 3	Magn.	N/A		76214A 6	Magn.	N/A		821630A 2	Magn.	806190A 2	Magn.	N/A		N.L.A.	809670T
Bravo Three	1993 - 2001	0D763691 - 0M179452	821631T 1	Alum.	N/A		76214T 5	Alum.	76214 4	Alum.	821630T 1	Alum.	806190T 1	Alum.	N/A	Alum.	809666A02	809666T
Bravo Three	1993 - 2001	0D763691 - 0M179451	821631T 3	Magn.	N/A		76214A 6	Magn.	76214 6	Magn.	821630A 2	Magn.	806190A 2	Magn.	N/A	Magn.	809666A03	809666T01
Bravo Three	2002 - 2016	0M179453 and up	821631T 1	Alum.	N/A		76214T 5	Alum.	76214 4	Alum.	821630T 1	Alum.	806190T 1	Alum.	N/A	Alum.	N/A	865182Q01
Bravo Three	2002 - 2016	0M179453 and up	821631T 3	Magn.	N/A		76214A 6	Magn.	76214 6	Magn.	821630A 2	Magn.	806190A 2	Magn.	N/A	Magn.	N/A	865182A02
Blackhawk	1994 - 1995	0F186717 and up	N/A		N/A		806187A 1	Alum.	N/A		N/A		806190T 1	Alum.	N/A		N/A	N/A
SSM II/III/IV	1982 - 1995		34762A 1	Zinc	N/A		N/A		N/A		N/A		N/A		N/A		N/A	N/A
SSM VI/VII	1990 - 1995		848653T	Alum.	N/A		847635	Alum.	N/A		N/A		N/A		N/A		N/A	N/A
TR	1977 - 1987	4794900 and up	34762A 1	Zinc	N/A		31640T 4	Alum.	N/A		N/A		N/A		N/A		N.L.A.	809670T
TR	1977 - 1987	4794900 and up	34762A 1	Zinc	N/A		31640T 6	Magn.	N/A		N/A		N/A		N/A		N.L.A.	809670T
TRS	1977 - 1987	4794900 and up	34762A 1	Zinc	N/A		31640T 4	Alum.	N/A		N/A		N/A		N/A		809664A 1	809662T
TRS	1977 - 1987	4794900 and up	34762A 1	Zinc	N/A		31640T 6	Magn.	N/A		N/A		N/A		N/A		809664A 1	809662T

Place Orders | Print Invoices | Register Product | Pay Online

ANODE CHARTS - ACCESSORIES AND INBOARD

Closed Cooling Anodes

Model	Year Range	Anode	Mat.	Size
120/140/165	1972 - 1982	54-808112	Zinc	1-1/2 inch X 1/2 inch anode w/ 3/8 inch pipe plug
888/215/225	1972 - 1977	54-808112	Zinc	1 1/2 inch X 1/2 inch anode w/ 3/8 inch pipe plug
233/255	1973 - 1977	54-808112	Zinc	1 1/2 inch X 1/2 inch anode w/ 3/8 inch pipe plug
255/280 (G.M.)	1975 - 1977	54-808112	Zinc	1 1/2 inch X 1/2 inch anode w/ 3/8 inch pipe plug
325/350	1972 - 1976	54-808112	Zinc	1 1/2 inch X 1/2 inch anode w/ 3/8 inch pipe plug
888/215	1971	N.L.A.	Zinc	1 3/4 inch X 3/8 inch anode w/ 1/4 inch pipe plug
325/350	1971	N.L.A.	Zinc	1 3/4 inch X 3/8 inch anode w/ 1/4 inch pipe plug
7.3L V-8 Diesel	1993 - 1995	54-808112	Zinc	2 inch X 1/2 inch anode with 3/8 inch pipe plug
530/636 Diesel	1989	879194217	Zinc	3/4 inch X 3/4 inch anode only
D183/D219 Diesel	1990 - 1993	879194217	Zinc	3/4 inch X 3/4 inch anode only
D254 Diesel	1990 - 1993	879194217	Zinc	3/4 inch X 3/4 inch anode only
D3.0/D3.6L Diesel	1994 - 1995	879194217	Zinc	3/4 inch X 3/4 inch anode only
D4.2L Diesel	1994 - 1995	879194217	Zinc	3/4 inch X 3/4 inch anode only

RACING

OIL TEMPERATURE GAUGE

Small gauge - fits 2-1/8 in.(54 mm) hole in dash. 12 volt system.

OIL TEMPERATURE SENDER



13611

2000 ohm sender designed for gauges that read from 140 to 320 deg.
Fits Mercury Racing sterndrive engines equipped with a crankcase oil temperature sender.

OUTBOARD TOP COWL GRAPHICS CHART

Race -Outboard Top Cowl Graphics

Description-Decal Sets	Model Year 1998-99	Model Year 2000	Model Year 2001-2002
Race Cowl Graphics Basic	37-849850A 1	37-8M0050503	37-8M0050503
F1 (2.0) Cowl Patch Kit	N.L.A	37-840323A11	
2.5 Champ Cowl Patch Kit	N/A	37-840323A15	
S3000 Cowl Patch Kit	N.L.A.	37-840323A12	
SST 120 Cowl Patch Kit	N.L.A.	37-840323A13	
S2000 Cowl Patch Kit	N.L.A.	N.L.A.	
2.5 Race Offshore Cowl Patch Kit	N/A	37-840323A10	
2.5 Drag Cowl Patch Kit	N/A	37-840323A 8	
XR2 Cowl Patch Kit	N.L.A.	N.L.A.	

Consumer -Outboard Top Cowl Graphics

Description-Decal Sets	Model Year 1998-99	Model Year 2000	Model Year 2001-2002
Consumer Cowl Graphics Basic	N/A	37-840323A 1	37-840323A 1
2.5 SS Cowl Patch Kit	N/A	37-840323A 7	N/A
2.5 Sport Cowl Patch Kit	N/A	37-840323A 5	N/A
2.5 Offshore Cowl Patch Kit	N/A	37-840323A 6	N/A
OptiMax 200XS Cowl Patch Kit	N/A	37-840323A18	N/A
Pro Max 225 Cowl Patch Kit	N/A		N/A
Pro Max 225 Offshore Cowl Patch Kit	N/A	N/A	N/A
Pro Max 225X	N/A	N/A	N/A
Pro Max 300 Cowl Patch Kit	N/A	37-840323A16	N/A
Pro Max 300X Cowl Patch Kit	N/A	N/A	37-840323A20

COWLS

SST 120 TOP COWL



8M0084538

Lightweight top cowl
Mercury SST120/S2000 race outboard.

CHAMP/S3000 TOP COWL



4006-848290A17

Lightweight top cowl.
Mercury Champ/S3000 race outboards.

RACE BOTTOM COWL



4007-848164T 3

Without Base Plate
Lightweight bottom cowl complete.
Mercury SST 120/S2000, Champ, S3000, Drag and F1 race outboards.

OUTBOARD HD PROPSHAFT KITS

Used to convert a standard outboard prop shaft to a heavy-duty application. Requires seal installation tool 91-840388.

PROPSHAFT KIT



44-840450A03

Kits contains new propshaft, washers, lock nut and prop hub assembly.
Fits 2.5L, left hand rotation outboards.

PROPSHAFT KIT



44-840451A03

Kits contains new propshaft, washers, lock nut and prop hub assembly.
Fits 2.5L, right hand rotation outboards.

SEAL INSTALLATION TOOL



91-8M0059911

CYLINDER HEADS FOR V-6 OUTBOARD

CYLINDER HEAD



18787T 2

26 cc
Fits Mercury/Mariner XR2/SST 120

CYLINDER HEAD



18789T04

38 cc
Fits Mercury/Mariner 2.5L - four bolt main block

CYLINDER HEAD



900-8M0053744

26 cc
Fits Mercury/Mariner S3000/Drag

CYLINDER HEAD



18787019

36.5 cc
Fits Mercury/Mariner Champ

CYLINDER HEADS FOR 2.5 EFI DRAG

DOES NOT include seal (858452--1) or o'ring (859772--1).

27.9CC O-RING CYLINDER HEAD



8M0050396

O-Ring sealed cylinder head replaces traditional head-gasket head. Provides greater head stability.

2.5 EFI Drag Cylinder Head. Equivalent to the 21CC gasketed drag race head.

32.9CC O-RING CYLINDER HEAD

849496T05

O-ring sealed cylinder head replaces traditional head-gasket head. Provides greater head stability.

2.5 EFI Drag Cylinder Head. Stock Head.

43.9CC O-RING CYLINDER HEAD

8M0051522

O-ring sealed cylinder head replaces traditional head-gasket head. Provides greater head stability.

Standard 2.5 EFI Drag Cylinder Head. Equivalent to the 2.5 EFI Champ race head.
(Pump Gas)

ALUMINUM FLYWHEEL FOR V-6 OUTBOARDS

Can be used in place of standard flywheel (right hand rotation). Lightweight design gives more responsive throttle control for improved acceleration and speed control. Cannot be used with engines equipped with standard 40 amp stator.

ALUMINUM FLYWHEEL



249- 6080A42

94 teeth - for use with starter Bendix that has 8 teeth

FLYWHEEL PULLER



91-849154T 1

STATOR

STATOR



398- 9610A27

40 amp. Not for use with aluminum flywheels.

Fits Mercury Pro-Max and Mariner Super Magnum models only.

HEAVY DUTY BATTERY CABLES FOR V-6 OUTBOARDS

Designed to replace standard battery cables. Includes both positive and negative cable complete with ring terminals.

HEAVY DUTY BATTERY CABLES



84- 61378A 2

For use with Mercury/Mariner V-6 Outboards

2.5L DRAG POWERHEADS

These products are sold "as is" with no warranty.

GASKET SET



27-814658A 6

Fits S3000 and Champ.

CHAMP/S3000

These products are sold "as is" with no warranty.

GASKET SET



27-814658A 6

Fits S3000 and Champ.

PLASTIC REED VALVES

Designed specifically for high performance engines. Will withstand higher engine RPM without chipping.

PLASTIC REED VALVES



34- 77887A 1

Single stage - 5 petal reeds. Set contains 2 reeds, 6 sets required per engine.

PLASTIC REED VALVES



34- 14594A 2

Dual stage - 5 petal reeds. Set contains 2 primary and 2 secondary reeds, 6 sets required per engine

PLASTIC REED VALVES



34-849484A 1

Single stage - 7 petal reeds. Set contains 2 reeds, 6 sets required per engine.

PLASTIC REED VALVES



34-815242A 3

Dual stage - 7 petal reeds. Set contains 2 primary and 2 secondary reeds, 6 sets required per engine

PLASTIC REED VALVES



34- 14594A 3

Dual stage - 4 petal reeds. Rubber coated, set contains 2 primary and 2 secondary reeds, 6 sets required per engine

AIR INTAKE SPACER KIT

The 1 in.(25 mm) spacer plate is bolted between the air intake and the reed plate. This provides a better air/fuel mixture at low and mid RPM ranges. The result is more torque which increases acceleration. The spacer kit will enhance performance on Mercury Racing 2.4 EFI center inlet and 2.5 EFI center inlet without belt driven alternator. The throttle link rod must be fabricated for the spacer to work with 2.4L models.

AIR INTAKE SPACER KIT



818451A 2

Fits Mercury Racing 2.4 EFI center air inlet engines and 2.5 EFI center air inlet engines without belt driven alternators.

ELECTRIC FUEL PUMPS

ELECTRIC FUEL PUMP



8M8026000

Bosch, pump only, use with 39 PSI regulator.
Mercury Racing 2.5 EFI outboards.

ELECTRIC FUEL PUMP



848045A 7

Bosch, pump only, use with 56 PSI regulator
Fits 2.0, S3000, EFI Drag

ELECTRIC FUEL PUMP



18018A 1

Holley pump assembly
Fits SST 120, S2000 and 2.5L carburetor engines

ELECTRIC FUEL PUMP



840368A 1

Weldon pump assembly
Fits 2.5 Drag, S3000,Champ and F1.

ELECTRICAL COMPONENTS

PANEL & BOAT WIRING HARNESS



76366T04

Boat Wiring Harness (Harness only - 84-93940A 2)

DRIVESHAFT HOUSING ASSEMBLY -12 INCH

DRIVESHAFT HOUSING ASSEMBLY



3526-821986A 1

12 in.(308 mm) race center Up/Down complete
Fits Mercury Racing V-6 Outboards.

DRIVESHAFT HOUSING ASSEMBLY



8M0050993

12 in.(308 mm) race center housing only

Fits Mercury Racing V-6 Outboards.

TRIM PUMPS

For Hydraulic Up/Down Race Center Sec.

TRIM PUMP KIT



818377A 2

Complete 12 volt horizontal pump with electric's, mounting bracket and attaching hardware.

TRIM HOSES

Steel braided, 3/8-24 UNF, inverted flare/double flare both ends

TRIM HOSE



32- 67032A12

12 in.(304 mm)

32- 67032A24

24 in.(610 mm)

32- 67032A36

36 in.(914 mm)

32- 67032A48

48 in.(1219 mm)

32- 67032A72

72 in.(1828 mm)

32- 67032A96

96 in.(2438 mm)

RIGGING ACCESSORIES

CABLE STEERING PULLEY ASSEMBLY



847788A 1

RIGGING HOSE KIT



32-825191A 2

RIGGING TUBE KIT



32-842756T01

Mercury Racing version, the cowl fitting bolts firmly into place. Because the 2-1/2 inch tubing threads into the one piece couplers instead of over them, greater clearance is achieved for outboard rigging hardware including throttle cables, electronics cables, steering lines, and fuel lines. The durable hose and one piece couplers provide a complete seal at both the engine and boat ends. Hose length is 5 feet.

Fits all production 3.0 liter V-6 EFI and OptiMax cowls as well as Racing 3.0 liter OptiMax cowls.

350 VERADO SNORKEL KIT



8M8024668

For severe duty offshore applications requiring extra protection from water intrusion into the inlet tract. Attachs to the existing front air inlet scoop with block offs provided for the normal air ingress passages using a flange to attach tubing to the scoop and another flange to a dry air compartment forward of the transom.

Mercury 350 Verado outboards

OIL TANK ASSEMBLY



840988A 1

Includes oil tank, sender and harness (Digital Smartcraft)
Mercury Branded

OUTBOARD GEARCASE CANISTER KIT

Relieves gear lube pressure build-up and prevents seal blow out. Kit is highly recommended for use with the IV SSM and VI SSM.

OUTBOARD GEARCASE CANISTER KIT



821085A 3

For use with Mercury Racing Outboards with IV SSM and VI SSM gearcases

FLUSHING KITS

FLUSHING KIT



849996T 1

Fits MCM Bravo I Performance & BlackHawk drives with low water pick-up.

FLUSHING KIT



843122T01

Designed specifically for the Mercury Racing Sport Master Gearcase. Mounts securely over the crescent-leading shape, providing water up through the low-water pick-ups.
Fits Mercury Racing Bravo I Sport Master

FLUSHING ATTACHMENT



848703A 1

Fits Mercury Racing CLE gearcases. Engines may be run at idle speeds.

FLUSHING ATTACHMENT



848998A 1

Fits Mercury Racing Sport Master gearcases. Engines may be run at idle speeds.

GEARCASE CHARTS - OUTBOARD 2.5L MODEL

2.5L Sport Master Gearcase With Torque Tab

Ratio	Rotation	TorqueTab	Shaft Length	Part Number	Service Housing
1.62:1	RH	Yes	S(15)	1687-840560A27	1600-8M0083306
1.62:1	RH	Yes	L(20)	1687-840560A28	1600-8M0083306
1.62:1	RH	Yes	XL(25)	1687-840560A29	1600-8M0083306
1.75:1	RH	Yes	S(15)		1600-8M0083306
1.75:1	RH	Yes	L(20)		1600-8M0083306
1.75:1	RH	Yes	XL(25)		1600-8M0083306
1.87:1	RH	Yes	S(15)	1687-840560T33	1600-8M0083306
1.87:1	RH	Yes	L(20)	1687-840560T34	1600-8M0083306
1.87:1	RH	Yes	XL(25)	1687-840560T35	1600-8M0083306
2.00:1	RH	Yes	S(15)	1687-8M0081852	1600-8M0083306
2.00:1	RH	Yes	L(20)	1687-840560T37	1600-8M0083306
2.00:1	RH	Yes	XL(25)	1687-840560A38	1600-8M0083306

2.5L Sport Master Gearcase w/o Torque Tab

Ratio	Rotation	Torque Tab	Shaft Length	Part Number	Service Housing
1.62:1	RH	No	S(15)	1687-840561A27	1600-8M0084203
1.62:1	RH	No	L(20)	1687-840561A28	1600-8M0084203
1.62:1	RH	No	XL(25)	1687-840561A29	1600-8M0084203
1.75:1	RH	No	S(15)		1600-8M0084203
1.75:1	RH	No	L(20)		1600-8M0084203
1.75:1	RH	No	XL(25)		1600-8M0084203
1.87:1	RH	No	S(15)	1687-840561T33	1600-8M0084203
1.87:1	RH	No	L(20)	1687-840561T34	1600-8M0084203
1.87:1	RH	No	XL(25)	1687-840561A35	1600-8M0084203
2.00:1	RH	No	S(15)	1687-840561T36	1600-8M0084203
2.00:1	RH	No	L(20)	1687-840561A37	1600-8M0084203
2.00:1	RH	No	XL(25)	1687-840561A38	1600-8M0084203

2.5L Sport Master Gearcase Counter Rotation

Ratio	Rotation	Torque Tab	Shaft Length	Part Number	Service Housing
1.62:1	LH	No	S(15)	1687-840561A63	1600-8M0084203
1.62:1	LH	No	L(20)	1687-840561A64	1600-8M0084203
1.62:1	LH	No	XL(25)	1687-840561A65	1600-8M0084203
1.75:1	LH	No	S(15)		1600-8M0084203
1.75:1	LH	No	L(20)		1600-8M0084203
1.75:1	LH	No	XL(25)		1600-8M0084203
1.87:1	LH	No	S(15)	1687-840561T69	1600-8M0084203
1.87:1	LH	No	L(20)	1687-840561T70	1600-8M0084203
1.87:1	LH	No	XL(25)	1687-840561T71	1600-8M0084203
2.00:1	LH	No	S(15)	NLA	1600-8M0084203
2.00:1	LH	No	L(20)	NLA	1600-8M0084203
2.00:1	LH	No	XL(25)	N.L.A.	1600-8M0084203

2.5L Torque Master Gearcase

Ratio	Rotation	Torque Tab	Shaft Length	Part Number	Service Housing
1.87:1	RH	Yes	L(20)		1686-827214T25
2.00:1	RH	Yes	L(20)		1686-827214T25

OUTBOARD GEAR SET FOR 2.5L MODELS

GEAR CONVERSION KIT



43-848855T 2

To convert a 1.87:1 or 2.00:1 ratio RH rotation gearcase to a 1.62:1 ratio
Fits 2.5L outboards

GEAR CONVERSION KIT



43-849189T 2

To convert a 1.87:1 or 2.00:1 ratio RH rotation gearcase to a 1.75:1 ratio
Fits 2.5L outboards

WATER PRESSURE RELIEF VALVE KIT

WATER PRESSURE RELIEF VALVE KIT



863208A 3

The purpose of this kit is to regulate engine block water pressure to a maximum of 30 psi and vent excess water overboard.

Fits all MCM engines in high performance applications where engine block water pressures are exceeding the maximum 30 psi.

SPACER KITS

SIX SSM SPACER KIT



846743A 1

.50 inch (12.7 mm) spacer

846562A 1

1 inch (25.4 mm) spacer

846563A 1

1.50 inch (38.1 mm) spacer

846744A 1

2 inch (50.8 mm) spacer

846745A 1

2.50 inch (63.5 mm) spacer

846564A 1

3 inch (76.2 mm) spacer

M8 DRIVE SPACER KIT



8M8025968
.50 inch (12.7 mm)
Lowers M8 drives .50 inch from stock height.

8M8025970
1.50 inch (38.1 mm)
Lowers M8 drives 1.50 inches from stock height.

8M8025969
1 inch (25.4 mm)
Lowers M8 drives 1 inch from stock height.

8M8025971
2 inch (50.8 mm)
Lowers M8 drives 2 inches from stock height.

8M8025972
2.50 inch (63.5 mm)
Lowers M8 drives 2.50 inches from stock height.

8M8025973
3 inch (76.2 mm)
Lowers M8 drives 3 inches from stock height.

NXT1 SPACER KIT



8M8023731
.50 inch (12.7 mm)
Lowers NXT1 .50 inch from stock height.

8M8023733
1 inch (25.4 mm)
Lowers NXT1 drives 1 inch from stock height.

SPACER KIT

8M8000033
1.50 inch (38.1 mm)
Lowers NXT1 drives 1.50 inches from stock height.

8M8023737
2 inch (50.8 mm)

Lowers NXT1 drives 2 inches from stock height.

8M8000035
2.50 inch (63.5 mm)
Lowers NXT1 or NXT1/6 SSM drives 2.50 inches from stock height.

8M8023741
3 inch (76.2mm)

Lowers NXT1 drives 3 inches from stock height.

BRAVO HP TRANSOM ASSEMBLY

TRANSOM ASSEMBLY



6-6511002NZ
Bravo, Heavy Duty (w/o sender)
Used with Racing Products engines

6-620000091
Bravo, Heavy Duty w/ digital sender
Used with Racing Products engines

BRAVO XR DRIVE CHARTS



Bravo XR Drives

Part Number	Drive Complete	Upper	Lower
5-5E31900TP	Bravo One XR 1.35:1 DWP	1589-865440H56	1656- 8866A83
5-5E31200TP	Bravo One XR 1.50:1 DWP	1589-865440H56	1656- 8866A62
5-5H41300TZ	Bravo Three XR 1.65:1	1589-865440H56	1656- 8866G08
5-5H41400TZ	Bravo Three XR 1.81:1	1589-865440H56	1656- 8866G06
5-5H41600TZ	Bravo Three XR 2.00:1	1589-865440H56	1656- 8866G09

Bravo XR Gear Sets

Bravo Drive Model	Drive Ratio	Upper Gear Set	Tooth Count	Lower Gear Set	Tooth Count
Bravo One XR	1.26	43-840898A 3	(16/19)	43-840870A 1	(17/18)
Bravo One XR	1.35	43-840898A 3	(16/19)	43-8M0104360	(15/17)
Bravo One XR	1.50	43-840898A 3	(16/19)	43-818928A 2	(15/19
Bravo Three XR	1.65	43-840898A 3	(16/19)	43-824517A 1	(18/25)
Bravo Three XR	2.00	43-840898A 3	(16/19)	43-822535A 1	(16/27)

Bravo One XR Sport Master

Sale Code	Model	Description
5-5F36902HH	Bravo One XR Sport Master 1.35L STD	Contact your regional sales office to place orders.
5-5G36902HH	Bravo One XR Sport Master 1.35S STD	Contact your regional sales office to place orders.
5-5F36202HH	Bravo One XR Sport Master 1.50L STD	Contact your regional sales office to place orders.
5-5G36202HH	Bravo One XR Sport Master 1.50S STD	Contact your regional sales office to place orders.

Bravo XR Sport Drive

Sales Codes	Model	Description
5-5G31902HH	Bravo One XR Sport 1.35	XR Sport Short DWP 1.35
5-5G31202HH	Bravo One XR Sport 1.50	XR Sport Short DWP 1.50
5-5G31912HH	Bravo One XR Sport 1.35 ITS	XR Sport Short DWP 1.35 ITS
5-5G31212HH	Bravo One XR Sport 1.50 ITS	XR Sport Short DWP 1.50 ITS

Integrated Transom Assembly

Sales Codes	Model	Part Number Status
6-6521002KH	Integrated Transom Assembly	Active
	DRIVE OPTIONS	
5-5E31910TP	Bravo One XR 1.35 DWP ITS	Active
5-5E31210TP	Bravo One XR 1.50 DWP ITS	Active
5-5F36912HH	SPORT MASTER LONG 1.35 ITS	Active
5-5G36912HH	SPORT MASTER SHORT 1.35 ITS	Active
5-5F36212HH	SPORT MASTER LONG 1.50 ITS	Active
5-5G36212HH	SPORT MASTER SHORT 1.50 ITS	Active
5-5H41310TZ	Bravo Three XR 1.65:1 ITS	Active
5-5H41410TZ	Bravo Three XR 1.81:1 ITS	Active
5-5H41610TZ	Bravo Three XR 2.00:1 ITS	Active

STERNDRIVE ACCESSORIES

FLAME ARRESTOR



843946T

Optional - 4-1/2 in.
Fits MCM 600 SCi

QUICK-CHANGE THRU TRANSOM EXHAUST TIPS



843426A 1

Polished stainless steel tips feature a in.quick change in. anti-backflow valve. 2 outlets per kit.

For 4 in. (102 mm) I.D. exhaust pipe. Fits all Mercury Racing and Mercury MerCruiser consumer sterndrive engine packages.

TRANSOM EXHAUST TIPS REPAIR KIT



843426A 2

This kit is to repair the internal rubber flapper baffle for one 4 in. (102 mm) I.D. exhaust tip 843426A1. Contains components to repair one exhaust tip.

Fits all Mercury Racing and Mercury MerCruiser consumer sterndrive engine packages that have the Quick-Change Thru Transom Exhaust Tips

QUICK-CHANGE THRU TRANSOM EXHAUST TIPS



843434A 1

Polished stainless steel tips feature a in.quick change in. anti-backflow valve. 2 outlets per kit.

For 3 in. (76 mm) I.D. exhaust pipe. Fits all Mercury Racing and Mercury MerCruiser consumer sterndrive engine packages.

TRANSOM EXHAUST TIPS REPAIR KIT



843434A 2

This kit is to repair the internal rubber flapper baffle for one 3 in. (76 mm) I.D. exhaust tip 843434A1. Contains components to repair one exhaust tip.

Fits all Mercury Racing and Mercury MerCruiser consumer sterndrive engine packages that have the Quick-Change Thru Transom Exhaust Tips

TRANSOM EXHAUST TIPS FLAPPER ASSEMBLY



8M0109049

This kit is to repair the internal rubber flapper baffle for one 3 in. (76 mm) I.D. exhaust tip 843434A1. Contains components to repair one exhaust tip.

Fits all Mercury Racing and Mercury MerCruiser consumer sterndrive engine packages that have the Quick-Change Thru Transom Exhaust Tips

TRANSOM EXHAUST TIPS FLAPPER ASSEMBLY



8M0109050

This kit is to repair the internal rubber flapper baffle for one 4 in. (102 mm) I.D. exhaust tip 843426A1. Contains components to repair one exhaust tip.

Fits all Mercury Racing and Mercury MerCruiser consumer sterndrive engine packages that have the Quick-Change Thru Transom Exhaust Tips.

BRAVO ONE SPORT MASTER SPLASH PLATE



843042T03

Designed for extending the upper area of the Bravo One XR drives outfitted with the Sport Master Gearcase. Includes everything needed to mount the plate to a drive.

TAILSTOCK ASSEMBLY



8M8026029

Includes the shift linkage and cable mount required for manual shift transmissions.

For use with the Velvet Drive 72C based transmissions (BAM and Huber). Allows the use of Race M-Series transom plate assemblies and Race NXT1SSM stern drives utilizing those transmissions. Can also be used with Race Six Drive transom plate assemblies and Race NXT1SSM stern drives which require the removal of a spacer plate.

ENGINE HARNESS RIGGING KITS-NON DTS

HP RIGGING KITS (14 PIN)



8M8024581

Single engine application. Includes all the necessary CAN harnesses & hardware to connect the engines PCM with the dash/helm area, including key/start function, lanyard switch, SmartCraft junction block, & accessory dash power.

Designed for use with non-DTS engines using 14 pin "Deutsche" connections at the engine harness.

HP RIGGING KITS (14 PIN)



8M8024582

Twin engine application. Includes all the necessary CAN harnesses & hardware to connect the engines PCM with the dash/helm area, including key/start function, lanyard switch, SmartCraft junction block, & accessory dash power.

Designed for use with non-DTS engines using 14 pin "Deutsche" connections at the engine harness.

HP RIGGING KITS (14 PIN)



8M8024583

Triple engine application. Includes all the necessary CAN harnesses & hardware to connect the engines PCM with the dash/helm area, including key/start function, lanyard switch, SmartCraft junction block, & accessory dash power.

Designed for use with non-DTS engines using 14 pin "Deutsche" connections at the engine harness.

HP RIGGING KITS (14 PIN)



8M8024584

Quad engine application. Includes all the necessary CAN harnesses & hardware to connect the engines PCM with the dash/helm area, including key/start function, lanyard switch, SmartCraft junction block, & accessory dash power.

Designed for use with non-DTS engines using 14 pin "Deutsche" connections at the engine harness.

ANALOG GAUGE INTERFACE (AGI) KIT



892486K07

Includes AGI Module Assembly, Harness and hardware.
For installations using analog gauges instead of SmartCraft. Use with analog tachometer, coolant temp, oil pressure or level, trim and fuel level.

Race MerCruiser or outboard engines in single or multiple engine installations plus MerCruiser 496Mag/Mag HO engines.

Mercury Branded

ANALOG GAUGE INTERFACE (AGI) KIT



892486K04

For installations using analog gauges instead of SmartCraft. Use with analog tachometer,coolant temp, oil temp, oil pressure or fuel pressure gauges.

Race MerCruiser engines with the 14 pin Deutsch connector engine wiring harness. One AGI kit per engine required.

VESSEL ANALOG GAUGE INTERFACE (AGI) KIT



892486K05

For installations using analog gauges instead of SmartCraft. Use with analog tab position (port & starboard), fuel level (two fuel tanks) and trim position gauges.

Race MerCruiser engines with the 14 pin Deutsch connector engine wiring harness. One AGI kit per boat required.

FUEL FILTER

FUEL FILTER ASSEMBLY



35-8M0050833

Includes fuel filter, hose and adapter fitting.

Used on all Mercury Racing EFI engines.

MERCATHODE

MERCATHODE KIT



42600A18

Automatically protects the sterndrive from galvanic corrosion. Each Mercathode system is designed to protect one drive unit.

NXT1, NXT1/SSM or Dry Sump Six sterndrives.

MISCELLANEOUS

DECK MOUNT KIT - TRIM PUMP



842109A01

Mounting brackets and hardware to mount various Race trim pumps onto horizontal surfaces.

Can be used on Race power trim pumps included with Race Sport K-planes, Race NXT and M series transom plates and Race Optimax 200XS, 200XS ROS, 250XS, 250XS Sport and 300XS outboards. See Mercury electronic parts catalog (EPC) for outboard serial number(s) information.

X-HAUST NOISE REDUCER

Exhaust noise reduction system. Is compatible with both side-by-side (close couple) or staggered (driveline) engine installations depending on specific engine model. The Stage 1 system by itself limits idle noise levels to 88dBA. The Stage 1 system combined with the Stage 2 muffler kit will beat the stringent European Union (EU) Recreational Craft Directive (RCD) noise emission standard. Also provides compliance for most existing state or regional regulations that require a pass by test here in the United States. For use on Race 520, 540, 565, 600 SCi, EU 662 SCi and 700 SCi sterndrive engines.

X-HAUST STAGE 1 TAILPIPE KITS

CLOSE COUPLE TAILPIPE KIT - STAGE 1

Image not Available.

8M0094135

520 Port outlet. Kit includes all mounting hardware.

For 520 close couple engines only. Both single and twin engine applications. Can be used with standard steering and all Bravo XR drives. Or the Axius steering system when installed with Bravo 3XR stern drives only.

8M0094136

520 Starboard outlet. Kit includles all mounting hardware.

For 520 close couple engines only. Both single and twin engine applications. Can be used with standard steering and all Bravo XR drives. Or the Axius steering system when installed with Bravo 3XR stern drives only.

CLOSE COUPLE TAILPIPE KIT - STAGE 1

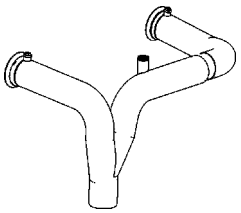

8M8023624

Port outlet. Requires 1 each 8M8023358 hardware kit for each tailpipe kit ordered.

For use on 540, 565, 600 SCi, EU662 SCi and 700 SCi sterndrive engines.

CLOSE COUPLE TAILPIPE KIT - STAGE 1

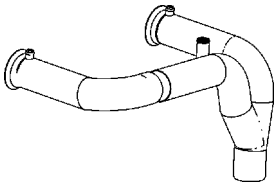

8M8023625

Starboard outlet. Requires 1 each 8M8023358 hardware kit for each tailpipe kit ordered.

For use on 540, 565, 600 SCi, EU662 SCi and 700 SCi sterndrive engines.

DRIVELINE TAILPIPE KIT - STAGE 1

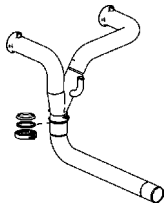

8M8023626

Port outlet. Requires 1 each 8M8023359 hardware kit for each tailpipe kit ordered.

For use on 540, 565, 600 SCi, EU662 SCi and 700 SCi sterndrive engines.

DRIVELINE TAILPIPE KIT - STAGE 1

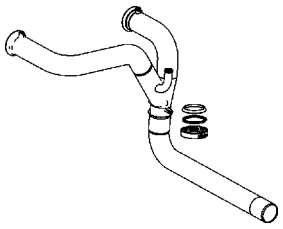

8M8023627

Starboard outlet. Requires 1 each 8M8023359 hardware kit for each tailpipe kit ordered.

For use on 540, 565, 600 SCi, EU662 SCi and 700 SCi sterndrive engines.

103 DEGREE TAILPIPE



8M0059759

103 degree angle tailpipe for use with X-Haust tailpipe kit and Mercury sweeper headers in driveline engine installations.

For use with 8M8023624 close couple tailpipe kit and Mercury sweeper headers in driveline engine applications. This tailpipe requires the driveline engine to be 42 inches ahead of the rear (close couple) engine.

X-HAUST TAILPIPE HARDWARE KITS

X-HAUST HARDWARE KIT



8M8023358

1 required for each X-Haust close couple tailpipe kit (8M8023624 or 8M8023625) ordered.

For use with X-Haust Stage 1 close couple tailpipe kits.

X-HAUST HARDWARE KIT



8M8023359

1 required for each X-Haust driveline tailpipe kit (8M8023626 or 8M8023627) ordered.

For use with X-Haust Stage 1 driveline tailpipe kits.

STAGE 2 MUFFLER KIT

X-HAUST STAGE 2 MUFFLER KIT

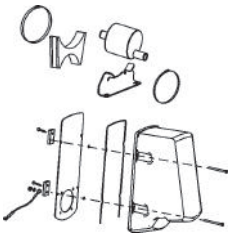

8M8023320

Transom muffler, idle relief attenuator, brackets and hardware are included in kit. One muffler kit required for each installed Stage 1 tailpipe kit.

For use on 520, 540, 565, 600 SCi, EU662 SCi and 700 SCi sterndrive engines with installed Stage 1 tailpipe kit(s).

X-HAUST ACCESSORIES

IDLE RELIEF OUTLET, TRANSOM DISCHARGE



8M0037021

One required for each engine with installed Stage 1 X-Haust system or Stage 1 and Stage 2 X-Haust systems. For back of boat discharge.

For use on 540, 565, 600 SCi, EU662 SCi and 700 SCi sterndrive engines.

IDLE RELIEF OUTLET, TRANSOM DISCHARGE



8M0092927

One required for each engine with installed Stage 1 X-Haust system or Stage 1 and Stage 2 X-Haust systems. For back of boat discharge.

For use on 520 sterndrive engines.

IDLE RELIEF OUTLET, SIDE DISCHARGE



8M0038928

One required for each engine with installed Stage 1 X-Haust system or Stage 1 and Stage 2 X-Haust systems. For port or starboard side of boat discharge.

For use on 540, 565, 600 SCi, EU662 SCi and 700 SCi sterndrive engines.

X-HAUST TRANSOM DRILL FIXTURE



91-8M0097143

X-Haust installation tool

For use on 520 engines

X-HAUST TRANSOM DRILL FIXTURE



91-8M0036608

X-Haust installation tool

For use on 600 SCi, EU662 SCi and 700 SCi engines.

X-HAUST TRANSOM DRILL FIXTURE



91-8M0064794

X-Haust installation tool

For use on 540 and 565 engines.

M SERIES TRANSOM PLATE ASSEMBLIES

M SERIES COMMON TRANSOM PLATE ASSEMBLY

6-6M29102IH

Complete common transom plate. When used with older transmissions (72C style) the 8M8026029 tailstock kit will also be required. Drive line installations may require additional components not included with this transom plate.

For use with NXT1 LS, NXT1 or SIX SSM and M8 stern drives.

M8 DRIVES

TRIM HOSE EXTENSION KIT



8M8027354

Set of two 96 inch hoses with 90 degree bend at one end.

For use with the common M series transom plates and M8 or NXT1 stern drives.

M8 PROP AERATOR KIT



8M8027372

Needed on certain boat hulls to ventilate the propellor(s) and reduce time to plane.

Race M8 stern drives.

M8 DRIVE CHART

For use with M series close couple or driveline transom plates

M8 Drive Chart

Ratio	Rotation	Part Number
1.245:1	L.H.	5-5V15E40IH
1.245:1	R.H.	5-5V25E40IH
1.304:1	L.H.	5-5V15X40IH
1.304:1	R.H.	5-5V25X40IH
1.334:1	L.H.	5-5V15H40IH
1.334:1	R.H.	5-5V25H40IH
1.398:1	L.H.	5-5V15G40IH
1.398:1	R.H.	5-5V25G40IH
1.461:1	L.H.	5-5V15F40IH
1.461:1	R.H.	5-5V25F40IH
1.531:1	L.H.	5-5V15L40IH
1.531:1	R.H.	5-5V25L40IH
1.692:1	L.H.	5-5V15P40HH
1.692:1	R.H.	5-5V25P40HH

NXT1 DRIVE CHART

Large skeg design, for use with M series close couple or driveline transom plates

NXT1 LS Drive Chart

Ratio	Rotation	Part Number
1.15:1	L.H.	5-5N15W20IH
1.15:1	R.H.	5-5N25W20IH
1.24:1	L.H.	5-5N15E20IH
1.24:1	R.H.	5-5N25E20IH
1.35:1	L.H.	5-5N15H20IH
1.35:1	R.H.	5-5N25H20IH
1.35:1	R.H. CAMBERED	5-5N25H23IH
1.50:1	L.H.	5-5N15K20IH
1.50:1	R.H.	5-5N25K20IH
1.50:1	R.H. CAMBERED	5-5N25K23IH
1.61:1	L.H.	5-5N15N20IH
1.61:1	R.H.	5-5N25N20IH
1.61:1	R.H. CAMBERED	5-5N25N23IH

NXT1 / SIX SSM DRIVE CHART

For use with M series close couple or driveline transom plates.

NXT SSM Drive Chart

Ratio	Rotation	Part Number
1.15:1	L.H.	5-5R15W20HH
1.15:1	R.H.	5-5R25W20HH
1.24:1	L.H.	5-5R15E20HH
1.24:1	R.H.	5-5R25E20HH
1.30:1	L.H.	5-5R15X20HH
1.30:1	R.H.	5-5R25X20HH
1.35:1	L.H	5-5R15H20HH
1.35:1	R.H.	5-5R25H20HH
1.42:1	L.H.	5-5R15J20HH
1.42:1	R.H.	5-5R25J20HH
1.50:1	L.H.	5-5R15K20HH
1.50:1	R.H.	5-5R25K20HH
1.61:1	L.H.	5-5R15N20HH
1.61:1	R.H.	5-5R25N20HH
1.69:1	L.H.	5-5R15P20HH
1.69:1	R.H.	5-5R25P20HH

NXT1 DRIVELINE KIT

NXT1 DRIVELINE KIT



842064A02

For conversion of a close couple engine to a driveline engine.
Racing NXT1 sterndrive packages only.

NXT1 STEERING INDICATOR

STEERING POSITION INDICATOR KIT



8M8021162

Provides steering position indication.
For use with the Race NXT1 drive only. Compatible with SmartCraft SC1000 gauges, SC5000 Systemview and Systemview Race Edition.

NXT1 WATER PICKUP KITS

WATER PICK UP KIT



842049A01

(0.1 square inch)
Interchangeable water pick up. For boat speed of 150 to 200 mph.
Race NXT1 sterndrives. One kit per drive required.

842049A02

(0.2 square inch)
Interchangeable water pick up. For boat speed of 110 to 160 mph.
Race NXT1 sterndrives. One kit per drive required.

842049A03

(0.3 square inch)
Interchangeable water pick up. For boat speed of 90 to 130 mph.
Race NXT1 sterndrives. One kit per drive required.

842049A04

(0.4 square inch)
Interchangeable water pick up. For boat speed of 80 to 100 mph.
Race NXT1 sterndrives. One kit per drive required.

842049A06

(0.6 square inch)
Interchangeable water pick up. For boat speed of 60 to 80 mph.
Race NXT1 sterndrives. One kit per drive required.

842049A08

(0.8 square inch)
Interchangeable water pick up. For boat speed of 50 to 70 mph.
Race NXT1 sterndrives. One kit per drive required.

NXT1 TORPEDO BORE COVER ASSEMBLY



8M8022198

To be installed in place of NXT1 water pick ups when hull mounted water pick ups are installed/used.
For use with NXT1 drives only. Not for use with NXT1 SSM drives.

QC4V ENGINES

NON-POWER STEERING ADAPTER KIT



8M8026006

Eliminates the power steering pump from the engine. With the adapter and pulley from the kit installed, the drive belt is re-used in its original routing.
Mercury Racing QC4v 1100 and 1350 hp engines.

CARBON FIBER DRESS KIT



8M8026070

Cosmetic upgrade kit. Includes front cover, port and starboard air intake covers plus installation hardware.
Race QC4v 1100 engines only. Kit comes standard on 1350 engines.

POWER STEERING

POWER-ASSISTED STEERING KIT



849906A14

This kit allows a customer to add power-assisted steering to their 500 EFI. To convert port to starboard you will need engine mount 849299.

POWER VALUE BLOCK ASSEMBLY



844399T01

Used to connect the power steering pump on the engine(s) with the steering helm and the steering cylinders located on the drive(s). Includes air purge bleeder-check valves and pressure relief valves.

NXT1, NXT1/SSM or Dry Sump Six sterndrives.

POWER STEERING RESERVOIR CAP



8M8020356

With threads to fit a -8 ORB fitting. Allows engines to be rigged with a series return line, or with the use of two power steering caps a common boat reservoir can be added between the two engine mounted reservoirs.

Gen. 1 525 EFI and 600 SCI engines. All 700 SCI engines.

POWER STEERING RESERVOIR KIT



8M8026004

External power steering reservoir. For use in applications where a common reservoir is wanted or needed. Comes with two inlet ports and two outlet ports plus an integral bracket that is suitable for mounting to a vertical surface.

For use with all Race 525, 600, 662, 700, 850, 1025, 1075, 1200 and QC4v 1100 or 1350 engines.

RACE DTS ACCESSORIES

ZERO EFFORT SINGLE PANEL MOUNT DTS RIGGING KIT



8M0101414

Includes helm board, key switch, lanyard, lever extension harness and other rigging parts. Reference 2015-01 Service Bulletin.

All Mercury Racing DTS products.

ZERO EFFORT SINGLE DTS RIGGING KIT



8M0101413

Includes helm board, key switch, lanyard, and other rigging parts. Reference 2015-01 Service Bulletin.

All Mercury Racing DTS products.

ZERO EFFORT DUAL DTS RIGGING KIT



8M0101415

Includes helm board, key switches, lanyards, and other rigging parts. Reference 2015-01 Service Bulletin.

All Mercury Racing DTS products.

ZERO EFFORT TRIPLE DTS RIGGING KIT



8M0101416

Includes helm board, key switches, lanyards, and other rigging parts. Reference 2015-01 Service Bulletin.

All Mercury Racing DTS products.

ZERO EFFORT QUAD DTS RIGGING KIT



8M0101417

Includes helm board, key switches, lanyards, and other rigging parts. Reference 2015-01 Service Bulletin.

All Mercury Racing DTS products.

EXTENSION HARNESS



84-8M8026041

7 ft. wiring extension harness for shift function. Labeled lever 1.

For use with Race DTS (digital throttle and shift) 14 pin data harnesses.

EXTENSION HARNESS



84-8M8026042

7 ft. wiring extension harness for shift function. Labeled lever 2.

For use with Race DTS (digital throttle and shift) 14 pin data harnesses.

EXTENSION HARNESS



84-8M8026043

7 ft. length wiring extension harness for throttle function. Labeled lever 3.

For use with Race DTS (digital throttle and shift) 14 pin data harnesses.

EXTENSION HARNESS



84-8M8026044

7 ft. length wiring extension harness for throttle function. Labeled lever 4.

For use with Race DTS (digital throttle and shift) 14 pin data harnesses.

BEARING UPGRADE KITS

GIMBAL BEARING KIT



30-879194A00

Perma-Lube Bearing Kit required to retrofit the new XR/XZ drives to older Bravo transom plate assemblies to provide enough clearance for the larger u-joint on the new XR/XZ drives.

Fits Bravo transom assemblies

DRIVESHAFT ASSEMBLY

DRIVESHAFT ASSEMBLY



45-846870A 1

9-1/4 in.(235 mm) 1410 series driveline.

Fits Mercury Racing III-A and V drives.

DRIVESHAFT KIT



45- 86978A 3

39.64 in.(1 m) optional driveshaft.

DRIVESHAFT ASSEMBLY



45-847633A 1

9 in.(229 mm) 1480 series heavy duty driveline. Adapter may be required for transmission.

Fits Mercury Racing VI and VII stern drives.

BRAVO HD PROPSHAFT KIT

PROPSHAFT KIT



44-840377A 1

Used to convert standard Bravo propshaft to a heavy-duty propshaft. A special tool (91-840393A 1) is also required to install the heavy-duty propshaft.

Fits Bravo One drives

RETAINER WRENCH



91-840393A 1

JET DRIVE

JET DRIVE REMOTE CONTROLS

Must be used with Jet Drive due to the design of the jet drive. This is due to strength and mounting requirements. Any substitutions must meet ABYC/Coast Guard standards for mini jet boats.

SIDE MOUNT REMOTE CONTROL



802755

Forward or aft cable entry. Accepts 40 series shift cables.

Fits Sport-Jet 175 and may be used on 90/95/120 applications with Remote Control Conversion Kit 850698A 1. Also fits 200 OptiMax, 210 & 240 EFI Jet Drives.

REMOTE CONTROL CONVERSION KIT



850698A 1

Allows the use of remote control 802755 and 40 series shift cables 853951A__ to be used on Sport-Jet 90/95/120 applications.

JET DRIVE SHIFT CABLES

SHIFT CABLE



820671A 8

30 series cable with 10/32 end threads.
Fits Sport-Jet 90/95/120 (1993-96)
2.4 m (8 ft.)

820671A10

30 series cable with 10/32 end threads.
Fits Sport-Jet 90/95/120 (1993-96)
3.0 m (10 ft.)

820671A12

30 series cable with 10/32 end threads.
Fits Sport-Jet 90/95/120 (1993-96)
3.7 m (12 ft.)

820671A14

30 series cable with 10/32 end threads.
Fits Sport-Jet 90/95/120 (1993-96)
4.3 m (14 ft.)

820671A16

30 series cable with 10/32 end threads.
Fits Sport-Jet 90/95/120 (1993-96)
4.9 m (16 ft.)

820671A18

30 series cable with 10/32 end threads.
Fits Sport-Jet 90/95/120 (1993-96)
5.5 m (18 ft.)

SHIFT CABLE



64-853951A10

40 series cable with 1/4-28 end threads. Includes shift cable bellows kit.
Fits Sport-Jet 175 (1997 thru 1999) and can also be used for 90/95/120 when used with optional Remote Control and Conversion Kit 850698A 1.
3.0 m (10 ft.)

64-853951A12

40 series cable with 1/4-28 end threads. Includes shift cable bellows kit.
Fits Sport-Jet 175 (1997 thru 1999) and can also be used for 90/95/120 when used with optional Remote Control and Conversion Kit 850698A 1.
3.7 m (12 ft.)

64-853951A14

40 series cable with 1/4-28 end threads. Includes shift cable bellows kit.
Fits Sport-Jet 175 (1997 thru 1999) and can also be used for 90/95/120 when used with optional Remote Control and Conversion Kit 850698A 1.
4.3 m (14 ft.)

64-853951A16

40 series cable with 1/4-28 end threads. Includes shift cable bellows kit.
Fits Sport-Jet 175 (1997 thru 1999) and can also be used for 90/95/120 when used with optional Remote Control and Conversion Kit 850698A 1.
4.9 m (16 ft.)

64-853951A18

40 series cable with 1/4-28 end threads. Includes shift cable bellows kit.
Fits Sport-Jet 175 (1997 thru 1999) and can also be used for 90/95/120 when used with optional Remote Control and Conversion Kit 850698A 1.
5.5 m (18 ft.)

SHIFT CABLE



858342A 8

40 series cable with cable end connector. Includes shift cable bellows kit.

Fits Sport-Jet 120XR2 (1999 and newer) and 175 (2000 and newer). Also fits 200 OptiMax, 210 & 240 EFI Jet Drives.

2.4 m (8 ft.)

858342A10

40 series cable with cable end connector. Includes shift cable bellows kit.

Fits Sport-Jet 120XR2 (1999 and newer) and 175 (2000 and newer). Also fits 200 OptiMax, 210 & 240 EFI Jet Drives.

3.0 m (10 ft.)

858342A12

40 series cable with cable end connector. Includes shift cable bellows kit.

Fits Sport-Jet 120XR2 (1999 and newer) and 175 (2000 and newer). Also fits 200 OptiMax, 210 & 240 EFI Jet Drives.

3.7 m (12 ft.)

858342A14

40 series cable with cable end connector. Includes shift cable bellows kit.

Fits Sport-Jet 120XR2 (1999 and newer) and 175 (2000 and newer). Also fits 200 OptiMax, 210 & 240 EFI Jet Drives.

4.3 m (14 ft.)

858342A16

40 series cable with cable end connector. Includes shift cable bellows kit.

Fits Sport-Jet 120XR2 (1999 and newer) and 175 (2000 and newer). Also fits 200 OptiMax, 210 & 240 EFI Jet Drives.

4.9 m (16 ft.)

858342A18

40 series cable with cable end connector. Includes shift cable bellows kit.

Fits Sport-Jet 120XR2 (1999 and newer) and 175 (2000 and newer). Also fits 200 OptiMax, 210 & 240 EFI Jet Drives.

5.5 m (18 ft.)

858342A20

40 series cable with cable end connector. Includes shift cable bellows kit.

Fits Sport-Jet 120XR2 (1999 and newer) and 175 (2000 and newer). Also fits 200 OptiMax, 210 & 240 EFI Jet Drives.

6.1 m (20 ft.)

858342A22

40 series cable with cable end connector. Includes shift cable bellows kit.

Fits Sport-Jet 120XR2 (1999 and newer) and 175 (2000 and newer). Also fits 200 OptiMax, 210 & 240 EFI Jet Drives.

6.7 m (22 ft.)

BULKHEAD COMPRESSION FITTINGS



820675

Fits Sport-Jet 90/95/120 and 175 with 40 series cables. Also fits 200 OptiMax, 210 & 240 EFI Jet Drives.

BULKHEAD COMPRESSION FITTINGS



820677A 1

For 30 series cable, use either Bulkhead Compression Fittings or Bulkhead Bellows Kits. Not for use together.

Fits Sport-Jet 90/95/120 with 30 series shift cables.

SHIFT CABLE BELLOWS



877581A 2

For 40 Series cable, installs on cable outside of transom.

Fits Sport-Jet 175 (1999 and older) and 90/95/120 with optional 802755 Remote Control with 40 Series shift cable.

SHIFT CABLE BELLOWS



877581A 5

For 40 series cable, installs on cable outside of transom.

Fits Sport-Jet 120XR2 and 175 (2000 and newer) with 40 series shift cables. Also fits 200 OptiMax, 210 & 240 EFI Jet Drives.

BULKHEAD BELLOWS KIT



850697A 2

Fits Jet Drive models with 40 series cables

JET DRIVE THROTTLE CABLES

Also Requires use of 12505A 1 Throttle cable connector.

PREMIUM T/S CABLE- SAE/SAE



897979A08
Premium throttle and shift build with stranded wire with SS armor wrap- 8 ft (2.4 m)
Brass ends with plating.
Ideal for performance applications as well as installations with various bends

897979A09
Premium throttle and shift build with stranded wire with SS armor wrap- 9 ft (2.7 m)
Brass ends with plating.
Ideal for performance applications as well as installations with various bends

897979A10
Premium throttle and shift build with stranded wire with SS armor wrap- 10 ft (3.0 m)
Brass ends with plating.
Ideal for performance applications as well as installations with various bends

897979A11
Premium throttle and shift build with stranded wire with SS armor wrap- 11 ft (3.4 m)
Brass ends with plating.
Ideal for performance applications as well as installations with various bends

897979A12
Premium throttle and shift build with stranded wire with SS armor wrap- 12 ft (3.7 m)
Brass ends with plating.
Ideal for performance applications as well as installations with various bends

897979A13
Premium throttle and shift build with stranded wire with SS armor wrap- 13 ft (4.0 m)
Brass ends with plating.
Ideal for performance applications as well as installations with various bends

897979A14
Premium throttle and shift build with stranded wire with SS armor wrap- 14 ft (4.3 m)
Brass ends with plating.
Ideal for performance applications as well as installations with various bends

897979A15
Premium throttle and shift build with stranded wire with SS armor wrap- 15 ft (4.6 m)
Brass ends with plating.
Ideal for performance applications as well as installations with various bends

897979A16
Premium throttle and shift build with stranded wire with SS armor wrap- 16 ft (4.9 m)
Brass ends with plating.
Ideal for performance applications as well as installations with various bends

897979A17
Premium throttle and shift build with stranded wire with SS armor wrap- 17 ft (5.2 m)
Brass ends with plating.
Ideal for performance applications as well as installations with various bends

897979A18
Premium throttle and shift build with stranded wire with SS armor wrap- 18 ft (5.5 m)
Brass ends with plating.
Ideal for performance applications as well as installations with various bends

897979A19
Premium throttle and shift build with stranded wire with SS armor wrap- 19 ft (5.8 m)
Brass ends with plating.
Ideal for performance applications as well as installations with various bends

897979A20
Premium throttle and shift build with stranded wire with SS armor wrap- 20 ft (6.1 m)
Brass ends with plating.
Ideal for performance applications as well as installations with various bends

897979A21
Premium throttle and shift build with stranded wire with SS armor wrap- 21 ft (6.4 m)
Brass ends with plating.
Ideal for performance applications as well as installations with various bends

897979A22
Premium throttle and shift build with stranded wire with SS armor wrap- 22 ft (6.7 m)
Brass ends with plating.
Ideal for performance applications as well as installations with various bends

JET DRIVE 135 & 270 DEG. STEERING SYSTEM

The 135 deg. system allows 135 degrees rotation of the steering wheel (3/8 turn lock to lock). The 270 deg. system allows 270 degrees rotation of the steering wheel (3/4 turn lock to lock).Order helm, bezel, and steering cable separately. If the size required is not listed, use the next larger size.

STEERING HELM



809486
135 Degree Steering Helm.
Fits all Sport Jet models, except V-6 models.

STEERING HELM



850699
270 Degree Steering Helm.
Fits all Jet Drive models

TILT STEERING HELM



64-879686

270 Degree Steering Helm.

Fits all Jet Drive models

BEZEL KIT



809485

Fits all Jet Drive models

STEERING CABLE



64-835457A11

11 ft.(3.4 m) 60 series cable with 5/16-24 end threads. Includes steering cable bellows kit.

Fits all Jet Drive models.

64-835457A13

13 ft.(4.0 m) 60 series cable with 5/16-24 end threads. Includes steering cable bellows kit.

Fits all Jet Drive models.

64-835457A15

15 ft.(4.6 m) 60 series cable with 5/16-24 end threads. Includes steering cable bellows kit.

Fits all Jet Drive models.

64-835457A17

17 ft.(5.2 m) 60 series cable with 5/16-24 end threads. Includes steering cable bellows kit.

Fits all Jet Drive models.

64-835457A19

19 ft.(5.8 m) 60 series cable with 5/16-24 end threads. Includes steering cable bellows kit.

Fits all Jet Drive models.

64-835457A21

21 ft.(6.4 m) 60 series cable with 5/16-24 end threads. Includes steering cable bellows kit.

Fits all Jet Drive models.

64-835457A23

23 ft.(7.0 m) 60 series cable with 5/16-24 end threads. Includes steering cable bellows kit.

Fits all Jet Drive models.

64-835457A25

25 ft.(7.6 m) 60 series cable with 5/16-24 end threads. Includes steering cable bellows kit.

Fits all Jet Drive models.

STEERING CABLE BELLOWS



877581A 4

Installs on cable outside of transom

Fits Jet Drive models with 270 Degree system and 60 series cables

STEERING CABLE ROD END

STEERING ROD END



883053A 1

For 135 & 540 deg. steering systems. 5/16 in. (7.9 mm)

Fits Sport Jet models with 60 series cables

STEERING CABLE BULKHEAD FITTINGS AND BELLOWS KITS

Hardware used to complete Sport Jet installations. Use either bulkhead fittings or bellows kit. Not for use together.

BULKHEAD COMPRESSION FITTINGS



820675

Fits Sport-Jet 90/95/120 and 175 with 40 series cables. Also fits 200 OptiMax, 210 & 240 EFI Jet Drives.

BULKHEAD BELLOWS KIT



850005A 2

For 135 & 270 deg. steering systems and 60 series cables.

Fits Jet Drive models with 60 series cables

BULKHEAD BELLOWS KIT



850697A 2

Fits Jet Drive models with 40 series cables

IGNITION KEY SWITCH WITH HARNESSES

Mounts in a 2-1/8 in.(54 mm) hole. Includes warning horn and electrical connections for instrumentation and lanyard stop switch.

KEY SWITCH W/ HARNESS



84-816626A 2

2 ft.(610 mm) harness with audio warning horn.

Fits Mercury/Mariner 6 hp. and Higher (2 cycle, USA & BEL Origin) outboards, Mariner 30/40 hp. with oil injection (2 cycle, Japanese Origin), all Mercury / Mariner 4-Stroke (USA Origin) outboards, Force 40 hp. and Higher (1993 and Newer) and Mercury Jet Drives. When used with MY2005 and newer 8/9.9 hp. FourStroke outboards an adapter harness 892473A01 is required.

84-816626A15

15 ft.(4.57 m) harness with audio warning horn.

Fits Mercury/Mariner 6 hp. and Higher (2 cycle, USA & BEL Origin) outboards, Mariner 30/40 hp. with oil injection (2 cycle, Japanese Origin), all Mercury/Mariner 4-Stroke (USA Origin) outboards, Force 40 hp. and Higher (1993 and Newer) and Mercury Jet Drives. When used with MY2005 and newer 8/9.9 hp. FourStroke outboards an adapter harness 892473A01 is required.

84-816626A20

20 ft.(6.1 m) harness with audio warning horn.

Fits Mercury/Mariner 6 hp. and Higher (2 cycle, USA & BEL Origin) outboards, Mariner 30/40 hp. with oil injection (2 cycle, Japanese Origin), all Mercury/Mariner 4-Stroke (USA Origin) outboards, Force 40 hp. and Higher (1993 and Newer) and Mercury Jet Drives. When used with MY2005 and newer 8/9.9 hp. FourStroke outboards an adapter harness 892473A01 is required.

84-816626A24

25 ft.(7.6 m) harness with audio warning horn.

Fits Mercury / Mariner 6 hp. and Higher (2 cycle, USA & BEL Origin) outboards, Mariner 30/40 hp. with oil injection (2 cycle, Japanese Origin), all Mercury / Mariner 4-Stroke (USA Origin) outboards, Force 40 hp. and Higher (1993 and Newer) and Mercury Jet Drives. When used with MY2005 and newer 8/9.9 hp. FourStroke outboards an adapter harness 892473A01 is required.

FLUSHING KITS

FLUSHING ATTACHMENT



22-820543A 1

For consumer use. Only for use while engine is not running.

Fits 90/95/120 Sport-Jet.

FLUSHING ATTACHMENT



22-820543A 6

Allows the customer to flush the engines while engine is not running or idling under 1200 RPM.

Fits 200 OptiMax, 210 and 240 EFI Jet Drives.

FLUSHING KIT



22-820573

Dealer kit, flushes engine while the engine is running. This kit is not for permanent installation. It is intended as a dealer service tool aid.

Fits Sport-Jet 90/95/120 engines.

REPLACEMENT CAP



19-821908

For consumer use sport-jet flushing attachment.

Fits the consumer use 90/95/120 Sport-Jet flushing attachment. Standard flushing kit on the Sport Jet 175 and the 200 OptiMax, 210 and 240 EFI Jet Drives.

REPLACEMENT INLET GRATES

REPLACEMENT INLET GRATE



854810T 1

Stainless steel Rock Grate for shallow rocky conditions.

Fits all V-6 Jet Drives (1997 & newer) and Sport-Jet 120 Jet Drives (1999 and 2000).

REPLACEMENT INLET GRATE



852962T

Inlet Grate - aluminum fixed grate.

Fits all V-6 Jet Drives (1997 & newer) and Sport-Jet 120 Jet Drives (1999 and 2000). Standard grate on the Sport-Jet 175XR2.

REPLACEMENT INLET GRATE



856627T 3

Hydro Surge Grate - automatic weed clean out system

Fits all V-6 Jet Drives (1997 & newer) and Sport-Jet 120 Jet Drives (1999 and 2000).

PUMP MOUNTING GROMMETS

Seals between the Jet Drive unit and the boat hull.

PUMP MOUNTING GROMMET



25-820663250

1/4 in.(6 mm) flange.

Fits Jet Drives with original dimension "short" tunnel cutouts.

25-820663375

3/8 in.(10 mm) flange

Fits Jet Drives with original dimension "short" tunnel cutouts.

25-820663A 2

3/8 in.(10 mm) flange

Fits Jet Drives with original dimension "short" tunnel cutouts.

Priced & packaged in qty. of 20

25-820663500

1/2 in.(13 mm) flange

Fits Jet Drives with original dimension "short" tunnel cutouts.

PUMP MOUNTING GROMMET



879634

3/8 in.(10 mm) flange. Provides improved vibration isolation.

Fits 200 OptiMax, 210 and 240 EFI Jet Drives with "Long" tunnel cutouts with radiused edges and glued in grommet.

PUMP MOUNTING GROMMET CHART

Pump Mounting Grommets

Model	Original Dimension Jet Drive; Short Tunnel Cutouts	Original Dimension Jet Drive; Short Tunnel Cutouts	Revised Dimension Jet Drive; Long Tunnel Cutouts w
Sport Jet 90/95/125	25-820663250	25-820663375	N/A
Sport Jet 175	25-820663250	25-820663375	882811
200 Optimax	25-820663250	25-820663375(1)	879634(2)
210	25-820663250	25-820663375(1)	879634(2)
240 EFI	25-820663250	25-820663375(1)	879634(2)

(1) Not Recommended

(2) Provides improved vibration isolation

TUNNEL SAMPLE

Aids in the development of jet boat designs. Can be fabricated into a prototype or used to make a mold.

TUNNEL SAMPLE



91-881242T

For fiberglass boats to help with jet drive boat design.

MUFFLERS

MUFFLER ASSEMBLY



859388A 1

Port

Fits 210 Carb Jet Drive

MUFFLER ASSEMBLY



859389A 1

Starboard

Fits 210 Carb Jet Drive

MUFFLER ASSEMBLY



878147A03

Port

Fits 200 DFI, 240 EFI & 250 DFI Jet Drives

MUFFLER ASSEMBLY



878148A03

Starboard

Fits 200 DFI, 240 EFI & 250 DFI Jet Drives

ANODES - SPORT JET

ANODE ASSY.



856581C

Aluminum

ANODE KIT



833163A 1

Aluminum

ANODE



820503 1

Aluminum

ANODE CHART - SPORT JET

SportJet Pump Anodes

Model	Serial # Range	Nozzle Anode	Mat.	Rudder Anode	Mat.
90 Sport Jet	0E021000 and up	N.L.A.	Zinc	820503 1	Alum.
95XR Sport Jet	0E021000 and up	N.L.A.	Zinc	820503 1	Alum.
120 Sport Jet	0E080400 - 0E145579	N.L.A.	Zinc	820503 1	Alum.
120XR Sport Jet	0E145580 - 0E344999	N.L.A.	Zinc	820503 1	Alum.
120XR2 Sport Jet	0E145580 - 0E379999	856581C	Alum.	820503 1	Alum.
175XR2 Sport Jet	0E151580 - 0E344999	833163A 1	Alum.	820503 1	Alum.
175XR2 Sport Jet	0F345000 - 0E433153	856581C	Alum.	820503 1	Alum.
200 DFI	0E379931 - 0E428850	856581C	Alum.	820503 1	Alum.
200 DFI M2	0E379931 - 0E423075	856581C	Alum.	820503 1	Alum.
210 Carb	0E379931 - 0E433153	833163A 1	Alum.	820503 1	Alum.
210 Carb M2	0E370718 - 0E426999	856581C	Alum.	820503 1	Alum.
240 EFI	0E379931 - 0E406399	833163A 1	Alum.	820503 1	Alum.
240 EFI	0E406400 and up	856581C	Alum.	820503 1	Alum.
240 EFI M2	0E370718 and up	856581C	Alum.	820503 1	Alum.
250 DFI	0E407100 and up	856581C	Alum.	820503 1	Alum.
250 DFI M2	0E407100 and up	856581C	Alum.	820503 1	Alum.

POINT-OF-SALE PRODUCT DISPLAYS AND LOGOS

Various groupings of extremely fast moving, high volume products will be offered throughout the near future. They will be designed to fit on this easel, providing constant messaging for your in-store customers.



POINT-OF-SALE PRODUCT EASELS

DISPLAY EASEL



8M0052605

This display easel can be free standing or hung on peg hooks. It is flood coated with a black varnish.

NEW

Included in the kit:

(1) easy to assemble display easel

(12) display hooks

(2) placard or chart fasteners

(1) Mercury logo decal

(2) Circle M decals

Mercury Branded

POINT-OF-SALE PRODUCT KITS

ANODE KIT



8M0052656

Let your customers know that our Cadmium-Free anodes are good for the environment and get them thinking about having them inspected for replacement. Anodes should always be replaced when 50% deteriorated for maximum protection.

Kit contains:

(2) 31640Q 4

(2) 821631Q 1

(2) 806190Q 1

(2) 76214Q 5

(2) 806189Q 1

(3) 826134Q

(2) 818298Q 1

(1) Cadmium-Free Placard

(1) suggested plan-o-gram for displaying on our easels

Applications are displayed on the back of the individual packages.

Quicksilver Branded, Clamshell Package Point of Sale Packaged.

8M0052657

Let your customers know that our Cadmium-Free anodes are good for the environment and get them thinking about having them inspected for replacement. Anodes should always be replaced when 50% deteriorated for maximum protection.

Kit contains:

(2) 31640T 4

(2) 821631T 1

(2) 806190T 1

(2) 76214T 5

(2) 806189T 1

(3) 826134T

(2) 818298T 1

(1) Cadmium-Free Placard

(1) suggested plan-o-gram for displaying on our easels
Applications are displayed on the back of the individual packages.
Mercury Branded, Clamshell Package Point of Sale Packaged.

IMPELLER KIT



47-8M0061756

A collection of various water impeller and water pump replacement parts. These feature the best impeller material and impeller to hub bonding in the industry, display packaged to raise customer awareness. Impellers should be inspected for replacement once per year or every 100 hours of operation. NEW

Kit contains:
(2) 47- 43026Q02 Impeller
(2) 47- 43026Q06 Impeller Repair Kit
(1) 47- 85089Q 4 Impeller Repair Kit
(2) 47- 42038Q02 Impeller
(2) 47- 96148Q 8 Water Pump Upper Repair Kit
(2) 47- 89984Q 5 Impeller Repair Kit
(2) 47- 59362Q01 Impeller Repair Kit
(1) Display Placard
(1) Suggested plan-o-gram for product placement, product applications are displayed on the back of the point-of-sale packaging.

Quicksilver Branded

LOGOS

MERCURY DECAL



37-8M0046011

Diecut and furnished on a premask.
1.67 (42mm) inches tall x 13.01 (330mm) inches long.
Mercury Branded

M-ICON



37-8M0043699

Mercury Marine registered trademark icon in a polished chrome, 66mm diameter circle with Red background.
Designed for use on a flat surface.
Mercury Branded

37-8M0043700

Mercury Marine registered trademark icon in a polished chrome, 39mm diameter circle with Red background.
Designed for use on a flat surface.
Mercury Branded

M-ICON



37-8M0043701

Mercury Marine registered trademark icon in a polished chrome, 39mm diameter circle with Black background.
Designed for use on a flat surface.
Mercury Branded

37-8M0043702

Mercury Marine registered trademark icon in a polished chrome, 53mm diameter circle with Black background.
Designed for use on a flat surface.
Mercury Branded

POINT-OF-SALE PRODUCT DISPLAYS AND LOGOS

37-8M0043703

Mercury Marine registered trademark icon in a polished chrome, 66mm diameter circle with Black background.

Designed for use on a flat surface.

Mercury Branded

37-8M0043705

Mercury Marine registered trademark icon in a polished chrome, 60mm diameter circle with Black background.

This icon has a more flexible backing and may be installed on a slightly curved surface.

Mercury Branded

37-8M0043706

Mercury Marine registered trademark icon in a polished chrome, 60mm diameter circle with Black background.

Designed for use on a flat surface.

Mercury Branded

M-ICON



37-8M0043707

Mercury Marine registered trademark icon in a polished chrome, 53mm diameter circle with Red background.

Designed for use on a flat surface.

Mercury Branded

M-ICON



37-8M0080152

Mercury Marine registered trademark icon in a polished chrome, 29mm diameter circle with Black background.

Designed for use on a flat surface.

Mercury Branded

TABLE OF CONTENTS

Outboard Maintenance 230

135-150-175-200 (4 Cylinder) Verado 1B311420 and above 234
150 EFI FourStroke 1B905505 and above 233
15 Hp FourStroke 0R235949 and above 231
2.5-3.5 HP FourStroke 0R131842 and above 231
200-300 (6 Cyl) Verado 1B390143-2B144127 (prior to Gen V) 234
200-300 (6 Cyl) Verado 2B144123 and above (Gen V) 235
20 Hp FourStroke 0R235168 and above 231
25-30 Hp EFI FourStroke 0R106999 and above . . 232
350-400 (6 Cyl) Verado 235
40-50-60 Hp FourStroke 1C050252 and above . . 232
40 Hp (3 cyl) FourStroke 1C049739 and above . . 232
4-5-6 Hp FourStroke 0R411838 and above 231
75-90-115/115 Pro XS Hp FourStroke 2B094996 and above 233
75-90-115 Hp FourStroke 1B366823-2B094995 . . 233
75-90-115 Optimax (1.5L) 1B227000 and above . . 230
8-9.9 Hp FourStroke 0R042475 and above 231
V-6 Optimax (2.5L, non-Pro models) 1B227000 and above 230
V-6 Optimax (3.0L, non-Pro models) 1B227000 and above 230

Service Interval Kits 236

MerCruiser Maintenance 238

3.0L MPI 238
3.0L TKS 238
3.0L V6 TDI 243
4.2L V8 TDI 243
4.3L MPI Alpha 239
4.3L MPI Bravo 239
4.3L TKS Alpha 238
4.3L TKS Bravo 238
4.5L MPI Alpha 239
4.5L MPI Bravo 239
5.0L/5.7L MPI Alpha 240
5.0L/5.7L MPI Bravo 240
5.0L/5.7L TKS Alpha 239
5.0L/5.7L TKS Bravo 240
5.7 & 6.2 MPI MIE 241
5.7L MPI Towsports 241
5.7L TKS MIE & Towsports 240
6.2L MPI Bravo 241
6.2L MPI Bravo (Mercury) 241
8.1L MCM & MIE 242
8.2L MCM & MIE 242
Alpha Sterndrive 243
Bravo Sterndrive 243
QSD 2.0 242
QSD 2.8 242
QSD 4.2 242

OUTBOARD MAINTENANCE

75-90-115 OPTIMAX (1.5L) 1B227000 AND ABOVE

TRIM TAB
31640T07

EDP - Black, this painted tab will not perform an anodic function.

31640Q03

Magnesium - For freshwater use only. Do not use in Saltwater applications.

POWER TRIM ANODE
818298T 1

Aluminum
Located on the bottom of the external power trim pump assembly.

818298T 3

Magnesium - For freshwater use only. Do not use in saltwater applications.
Located on the bottom of the external power trim pump assembly.

SIDE POCKET ANODE
826134T

Aluminum
Located in side pockets on the gearhousing just above the cavitation plate.

826134T 3

Magnesium - For freshwater use only. Do not use in saltwater applications.
Located in side pockets on the gearhousing just above the cavitation plate.

IN-LINE OIL FILTER
35-875284T01

FUEL FILTER ELEMENT
35-8M0060041

Under cowl replacement cartridge where applicable.

COMPLETE WATER PUMP
46- 43024A 7

Includes both upper & lower housings, gaskets, plate and impeller.

WATER PUMP IMPELLER
47- 43026T 2

SPARK PLUG
33-892567Q

NGK IZFR5J, check and set gap per owner's manual or the emissions control information decal if present.

THERMOSTAT
833072004

62 degrees Centigrade, 143 degrees Fahrenheit.

ALTENATOR BELT
57-8M0026410

75-125 Hp. 3 cylinder (1.5L) Optimax outboard

V-6 OPTIMAX (2.5L, NON-PRO MODELS) 1B227000 AND ABOVE

ANODIC PLATE
76214T 5

Aluminum
Provides additional clearance for high rake propellers.

76214A 6

Magnesium - For freshwater use only. Do not use in saltwater applications.

POWER TRIM ANODE
818298T 1

Aluminum
Located on the bottom of the external power trim pump assembly.

818298T 3

Magnesium - For freshwater use only. Do not use in saltwater applications.
Located on the bottom of the external power trim pump assembly.

SIDE POCKET ANODE
826134T

Aluminum
Located in side pockets on the gearhousing just above the cavitation plate.

826134T 3

Magnesium - For freshwater use only. Do not use in saltwater applications.
Located in side pockets on the gearhousing just above the cavitation plate.

IN-LINE OIL FILTER
35-875284T01

WATER SEPARATING FUEL FILTER
35- 18458T 4

Water separating fuel filter with the blue screw-in sensor.

WATER PUMP UPPER REPAIR KIT
46- 96148T 8

Includes plastic pump housing assembly, impeller, face plate, gaskets, drive key or pin, water tube guide sleeve, "O" rings and gearlube fill & vent screw seals. (Base not included)

WATER PUMP IMPELLER
47- 89984T 4

SPARK PLUG
33-889597Q

NGK, IZFR5G, check and set gap per owner's manual or the emissions control information decal if present.

THERMOSTAT
833072003

62 degrees Centigrade,143 degrees Fahrenheit

ALTERNATOR BELT
57-828507Q 4

135/150/175 Optimax, 2.5L DFI outboard

V-6 OPTIMAX (3.0L, NON-PRO MODELS) 1B227000 AND ABOVE

ANODIC PLATE
76214T 5

Aluminum
Provides additional clearance for high rake propellers.

76214A 6

Magnesium - For freshwater use only. Do not use in saltwater applications.

POWER TRIM ANODE
818298T 1

Aluminum
Located on the bottom of the external power trim pump assembly.

818298T 3

Magnesium - For freshwater use only. Do not use in saltwater applications.
Located on the bottom of the external power trim pump assembly.

SIDE POCKET ANODE
826134T

Aluminum
Located in side pockets on the gearhousing just above the cavitation plate.

826134T 3

Magnesium - For freshwater use only. Do not use in saltwater applications.
Located in side pockets on the gearhousing just above the cavitation plate.

IN-LINE OIL FILTER
35-875284T01

FUEL FILTER ELEMENT
35-8M0060041

Under cowl replacement cartridge where applicable.

WATER PUMP IMPELLER
47- 43026T 2

SPARK PLUG
33-843220Q

NGK, LZFR6J, check and set gap per owner's manual or the emissions control information decal if present.

THERMOSTAT
8M0057307

54 Degrees Centigrade, 130 Degrees Fahrenheit

BELT - ALTERNATOR
57-828507Q 5

2.5-3.5 HP FOURSTROKE 0R131842 AND ABOVE

ANODE
823913Q

Aluminum

INLINE FUEL FILTER
35- 16248

An in-line fuel filter located under cowl on outboard engines.

WATER IMPELLER REPAIR KIT
889246A16

Includes impeller, key, face plate and face plate gaskets.

WATER PUMP IMPELLER
47- 16154 3

SPARK PLUG
33-803507

NGK, DCPR6E, check and set gap per owner's manual or the emissions control information decal if present.

THERMOSTAT
804540

52 degrees Centigrade, 126 degrees Fahrenheit

4-5-6 HP FOURSTROKE 0R411838 AND ABOVE

ANODE
823912

Aluminum, Round style.

875208

Square style.

INLINE FUEL FILTER
35- 16248

An in-line fuel filter located under cowl on outboard engines.

WATER IMPELLER REPAIR KIT
16159A03

WATER PUMP IMPELLER
47- 16154 3

SPARK PLUG
33-803507

NGK, DCPR6E, check and set gap per owner's manual or the emissions control information decal if present.

THERMOSTAT
804540

52 degrees Centigrade, 126 degrees Fahrenheit

8-9.9 HP FOURSTROKE 0R042475 AND ABOVE

TRIM TAB ANODE
853762T01

Zinc

ANODE
875208

Square style.

INLINE FUEL FILTER
35- 16248

An in-line fuel filter located under cowl on outboard engines.

WATER IMPELLER REPAIR KIT
47-803748Q01

Includes new impeller and face plate.

47-803748Q02

Includes new impeller and face plate.

WATER PUMP IMPELLER
47-803748

47-803748 1

SPARK PLUG
33-803507

NGK, DCPR6E, check and set gap per owner's manual or the emissions control information decal if present.

THERMOSTAT
855676002

60 degree F. thermostat only. For the correct associated gasket for your model you will need to visit the Electronic Parts Catalog.

855676005

15 HP FOURSTROKE 0R235949 AND ABOVE

TRIM TAB ANODE
853762T01

Zinc

ANODE
875208

Square style.

INLINE FUEL FILTER
35- 16248

An in-line fuel filter located under cowl on outboard engines.

FOURSTROKE OUTBOARD OIL FILTER
35-822626K03

Replaceable screw-on type canister filters.

WATER IMPELLER REPAIR KIT
46-803750A06

WATER PUMP IMPELLER
47-803748

SPARK PLUG
33-803507

NGK, DCPR6E, check and set gap per owner's manual or the emissions control information decal if present.

THERMOSTAT
855676002

60 degree F. thermostat only. For the correct associated gasket for your model you will need to visit the Electronic Parts Catalog.

20 HP FOURSTROKE 0R235168 AND ABOVE

TRIM TAB ANODE
853762T01

Zinc

ANODE
875208

Square style.

INLINE FUEL FILTER
35- 16248

An in-line fuel filter located under cowl on outboard engines.

FOURSTROKE OUTBOARD OIL FILTER
35-822626K03

Replaceable screw-on type canister filters.

WATER IMPELLER REPAIR KIT
46-803750A06

WATER PUMP IMPELLER
47-803748

SPARK PLUG
33-803507

NGK, DCPR6E, check and set gap per owner's manual or the emissions control information decal if present.

THERMOSTAT
855676002

60 degree F. thermostat only. For the correct associated gasket for your model you will need to visit the Electronic Parts Catalog.

25-30 HP EFI FOURSTROKE 0R106999 AND ABOVE

TRIM TAB ANODE
853762

Zinc

ANODE
804043

823912002

Aluminum

FUEL FILTER KIT
35-8M0088825

FOURSTROKE OUTBOARD OIL FILTER
35-822626K03

Replaceable screw-on type canister filters.

IMPELLER REPAIR KIT
853792A07

WATER PUMP IMPELLER
47- 16154 1

Various 25-20 Hp. FourStroke and 2-cycle outboards.

SPARK PLUG
33-803507

NGK, DCPR6E, check and set gap per owner's manual or the emissions control information decal if present.

THERMOSTAT
855676002

60 degree F. thermostat only. For the correct associated gasket for your model you will need to visit the Electronic Parts Catalog.

40 HP (3 CYL) FOURSTROKE 1C049739 AND ABOVE

TRIM TAB
822157T03

17264T 2

POWER TRIM ANODE
818298T 1

Aluminum
Located on the bottom of the external power trim pump assembly.

818298T 3

Magnesium - For freshwater use only. Do not use in saltwater applications.
Located on the bottom of the external power trim pump assembly.

SIDE POCKET ANODE
826134T

Aluminum
Located in side pockets on the gearhousing just above the cavitation plate.

826134T 3

Magnesium - For freshwater use only. Do not use in saltwater applications.
Located in side pockets on the gearhousing just above the cavitation plate.

FUEL FILTER
35-879885K

In-line, under cowl fuel filter.

INLINE FUEL FILTER
35-879884T

A cartridge type fuel filter located under the cowl on outboard engines.

FOURSTROKE OUTBOARD OIL FILTER
35-8M0065104

Replaceable screw-on type canister filters.

COMPLETE WATER PUMP
46-812966A12

Includes both upper and lower housings, gaskets, key, O-ring, plate, and impeller

WATER PUMP IMPELLER
47- 19453T

Various 30-60 Hp. FourStroke outboards.

SPARK PLUG
33-883323001

Champion, RA8HC, check and set gap per owner's manual or the emissions control information decal if present.

THERMOSTAT KIT
855676A 1

Includes 120 degree thermostat and gaskets.

TIMING BELT
57-8M0065179

40-50-60 HP FOURSTROKE 1C050252 AND ABOVE

TRIM TAB
31640T07

EDP - Black, this painted tab will not perform an anodic function.

POWER TRIM ANODE
818298T 1

Aluminum
Located on the bottom of the external power trim pump assembly.

818298T 3

Magnesium - For freshwater use only. Do not use in saltwater applications.
Located on the bottom of the external power trim pump assembly.

SIDE POCKET ANODE
826134T

Aluminum
Located in side pockets on the gearhousing just above the cavitation plate.

826134T 3

Magnesium - For freshwater use only. Do not use in saltwater applications.
Located in side pockets on the gearhousing just above the cavitation plate.

FUEL FILTER
35-879885K

In-line, under cowl fuel filter.

INLINE FUEL FILTER
35-879884T

A cartridge type fuel filter located under the cowl on outboard engines.

FOURSTROKE OUTBOARD OIL FILTER
35-8M0065104

Replaceable screw-on type canister filters.

COMPLETE WATER PUMP
46-812966A12

Includes both upper and lower housings, gaskets, key, O-ring, plate, and impeller

46- 43024A09

WATER PUMP IMPELLER
47- 19453T

Various 30-60 Hp. FourStroke outboards.

47- 43026T 2

SPARK PLUG
33-883323001

Champion, RA8HC, check and set gap per owner's manual or the emissions control information decal if present.

THERMOSTAT
14586

120 Degrees

TIMING BELT
57-8M0065179

75-90-115 HP FOURSTROKE 1B366823-2B094995

TRIM TAB
31640T07

EDP - Black, this painted tab will not perform an anodic function.

POWER TRIM ANODE
818298T 1

Aluminum
Located on the bottom of the external power trim pump assembly.

818298T 3

Magnesium - For freshwater use only. Do not use in saltwater applications.
Located on the bottom of the external power trim pump assembly.

SIDE POCKET ANODE
826134T

Aluminum
Located in side pockets on the gearhousing just above the cavitation plate.

826134T 3

Magnesium - For freshwater use only. Do not use in saltwater applications.
Located in side pockets on the gearhousing just above the cavitation plate.

FUEL FILTER
35-879885K

In-line, under cowl fuel filter.

FOURSTROKE OUTBOARD OIL FILTER
35-877761K01

Replaceable screw-on type canister filter.

AIR FILTER
35-8M0082911

COMPLETE WATER PUMP
46- 43024A 7

Includes both upper & lower housings, gaskets, plate and impeller.

WATER PUMP IMPELLER
47- 43026T 2

SPARK PLUG
33-898829001

NGK, LFR4A-E, check and set gap per owner's manual or the emissions control information decal if present.

THERMOSTAT
892864T06

Includes thermostat and housing.

ALTERNATOR BELT
57-897574Q01

75-115 EFI 1.7L FourStroke outboard

75-90-115/115 PRO XS HP FOURSTROKE 2B094996 AND ABOVE

TRIM TAB
8M0091534

EDP painted, this tab does not provide anodic protection.

ANODIC PLATE
76214T 5

Aluminum
Provides additional clearance for high rake propellers.

POWER TRIM ANODE
818298T 1

Aluminum
Located on the bottom of the external power trim pump assembly.

818298T 3

Magnesium - For freshwater use only. Do not use in saltwater applications.
Located on the bottom of the external power trim pump assembly.

SIDE POCKET ANODE
826134T

Aluminum
Located in side pockets on the gearhousing just above the cavitation plate.

826134T 3

Magnesium - For freshwater use only. Do not use in saltwater applications.
Located in side pockets on the gearhousing just above the cavitation plate.

FUEL FILTER
35-879885K

In-line, under cowl fuel filter.

FOURSTROKE OUTBOARD OIL FILTER
35-8M0065104

Replaceable screw-on type canister filters.

COMPLETE WATER PUMP
8M0094529

Includes upper and lower housings, gaskets, plate, seals, key and impeller.

WATER PUMP IMPELLER
47- 43026T 2

SPARK PLUG
33-8M0057936

NGK, ZFR5F, check and set gap per owner's manual or the emissions control information decal if present.

THERMOSTAT ASSEMBLY
8M0090819

Includes thermostat and housing.

150 EFI FOURSTROKE 1B905505 AND ABOVE

ANODIC PLATE
76214T 5

Aluminum
Provides additional clearance for high rake propellers.

76214A 6

Magnesium - For freshwater use only. Do not use in saltwater applications.

POWER TRIM ANODE
8M0057772

Aluminum. Located on the bottom of the external power trim assembly.

SIDE POCKET ANODE
826134T

Aluminum
Located in side pockets on the gearhousing just above the cavitation plate.

826134T 3

Magnesium - For freshwater use only. Do not use in saltwater applications.
Located in side pockets on the gearhousing just above the cavitation plate.

FUEL FILTER
35-879885Q

In-line, under cowl fuel filter.

INLINE FUEL FILTER
35-8M0057677

High pressure in-line fuel filter to fuel rail.

FOURSTROKE OUTBOARD OIL FILTER
35-877761K01

Replaceable screw-on type canister filter.

COMPLETE WATER PUMP
8M0094529

Includes upper and lower housings, gaskets, plate, seals, key and impeller.

WATER PUMP IMPELLER
47- 43026T 2

SPARK PLUG
33-8M0057936

NGK, ZFR5F, check and set gap per owner's manual or the emissions control information decal if present.

THERMOSTAT
892864T06

Includes thermostat and housing.

ALTERNATOR BELT
57-8M0031641

135-150-175-200 (4 CYLINDER) VERADO 1B311420 AND ABOVE

ANODIC PLATE
76214T 5

Aluminum
Provides additional clearance for high rake propellers.

76214A 6

Magnesium - For freshwater use only. Do not use in saltwater applications.

POWER TRIM ANODE
818298T 1

Aluminum
Located on the bottom of the external power trim pump assembly.

818298T 3

Magnesium - For freshwater use only. Do not use in saltwater applications.
Located on the bottom of the external power trim pump assembly.

SIDE POCKET ANODE
826134T

Aluminum
Located in side pockets on the gearhousing just above the cavitation plate.

826134T 3

Magnesium - For freshwater use only. Do not use in saltwater applications.
Located in side pockets on the gearhousing just above the cavitation plate.

FUEL FILTER
35-879885K

In-line, under cowl fuel filter.

FUEL FILTER ELEMENT
35-8M0060041

Under cowl replacement cartridge where applicable.

FOURSTROKE OUTBOARD OIL FILTER
35-877767K01

Replaceable screw-on type canister filter.

AIR FILTER
35-896247

COMPLETE WATER PUMP
817275A09

Includes both upper and lower housings, gaskets, seals, key, Oil-carrier, retaining ring, plate, and impeller.

WATER PUMP IMPELLER
47- 43026T 2

SPARK PLUG
33-889246Q39

NGK, ILFR6GE, check and set gap per owner's manual or the emissions control information decal if present.

THERMOSTAT ASSEMBLY
892864T04

Includes thermostat and housing.

ALTERNATOR BELT
57-880566Q14

6 cylinder Verado

200-300 (6 CYL) VERADO 1B390143-2B144127 (PRIOR TO GEN V)

ANODIC PLATE
76214T 5

Aluminum
Provides additional clearance for high rake propellers.

76214A 6

Magnesium - For freshwater use only. Do not use in saltwater applications.

POWER TRIM ANODE
880653

893404

Multiple pieces may be required per engine application.

SIDE POCKET ANODE
826134T

Aluminum
Located in side pockets on the gearhousing just above the cavitation plate.

826134T 3

Magnesium - For freshwater use only. Do not use in saltwater applications.
Located in side pockets on the gearhousing just above the cavitation plate.

FUEL FILTER
35-879885K

In-line, under cowl fuel filter.

FUEL FILTER ELEMENT
35-8M0060041

Under cowl replacement cartridge where applicable.

FOURSTROKE OUTBOARD OIL FILTER
35-877769K01

Replaceable screw-on type canister filter.

AIR FILTER
35-893318T02

COMPLETE WATER PUMP
817275A09

Includes both upper and lower housings, gaskets, seals, key, Oil-carrier, retaining ring, plate, and impeller.

8M0078858

Includes water impeller, upper and lower housings, face plate, gaskets, drive key, face seal and water tube coupling.

WATER PUMP IMPELLER
47- 43026T 2

SPARK PLUG
33-889246Q39

NGK, ILFR6GE, check and set gap per owner's manual or the emissions control information decal if present.

THERMOSTAT ASSEMBLY
892864T04

Includes thermostat and housing.

ALTERNATOR BELT
57-880566Q14
6 cylinder Verado

200-300 (6 CYL) VERADO 2B144123 AND ABOVE (GEN V)

ANODIC PLATE
76214T 5
Aluminum
Provides additional clearance for high rake propellers.

76214A 6
Magnesium - For freshwater use only. Do not use in saltwater applications.

POWER TRIM ANODE
880653

893404
Multiple pieces may be required per engine application.

SIDE POCKET ANODE
826134T
Aluminum
Located in side pockets on the gearhousing just above the cavitation plate.

826134T 3
Magnesium - For freshwater use only. Do not use in saltwater applications.
Located in side pockets on the gearhousing just above the cavitation plate.

FUEL FILTER
35-879885K
In-line, under cowl fuel filter.

WATER SEPARATING FUEL FILTER
35-8M0095659
Designed smaller to better fit the hand, the internal holding capacity of this filter is as great as our standard filter. A new o-ring for the water sensor is included with each filter.

FOURSTROKE OUTBOARD OIL FILTER
35-877769K01
Replaceable screw-on type canister filter.

AIR FILTER
35-893318T02

COMPLETE WATER PUMP
817275A09
Includes both upper and lower housings, gaskets, seals, key, Oil-carrier, retaining ring, plate, and impeller.

8M0078858
Includes water impeller, upper and lower housings, face plate, gaskets, drive key, face seal and water tube coupling.

WATER PUMP IMPELLER
47- 43026T 2

SPARK PLUG
33-889246Q39
NGK, ILFR6GE, check and set gap per owner's manual or the emissions control information decal if present.

THERMOSTAT ASSEMBLY
892864T04
Includes thermostat and housing.

ALTERNATOR BELT
57-880566Q14
6 cylinder Verado

350-400 (6 CYL) VERADO

ANODIC PLATE
76214T 5
Aluminum
Provides additional clearance for high rake propellers.

76214A 6
Magnesium - For freshwater use only. Do not use in saltwater applications.

ANODE
8M0012083
Corrosion protection.

POWER TRIM ANODE
893404
Multiple pieces may be required per engine application.

SIDE POCKET ANODE
826134T
Aluminum
Located in side pockets on the gearhousing just above the cavitation plate.

826134T 3
Magnesium - For freshwater use only. Do not use in saltwater applications.
Located in side pockets on the gearhousing just above the cavitation plate.

FUEL FILTER
35-879885K
In-line, under cowl fuel filter.

FUEL FILTER ELEMENT
35-8M0060041
Under cowl replacement cartridge where applicable.

FOURSTROKE OUTBOARD OIL FILTER
35-877769K01
Replaceable screw-on type canister filter.

AIR FILTER
35-893318T02

COMPLETE WATER PUMP
817275A09
Includes both upper and lower housings, gaskets, seals, key, Oil-carrier, retaining ring, plate, and impeller.

8M0078858
Includes water impeller, upper and lower housings, face plate, gaskets, drive key, face seal and water tube coupling.

WATER PUMP IMPELLER
47- 43026T 2

SPARK PLUG
33-889246Q39
NGK, ILFR6GE, check and set gap per owner's manual or the emissions control information decal if present.

THERMOSTAT ASSEMBLY
892864T04
Includes thermostat and housing.

ALTERNATOR BELT
57-880566Q14
6 cylinder Verado

SERVICE INTERVAL KITS

100 HOUR SERVICE KIT



8M0090558

Oil filter, low & high pressure fuel filter, oil drain seal, 2-gearcase drain seals, thermostat and 2-thermostat gaskets

40-60 EFI 4Cyl. 4 Stroke

Mercury Branded

300 HOUR SERVICE KIT



8M0090559

Oil filter, low & high pressure fuel filter, oil drain seal, 2-gearcase drain seals, thermostat, 2-thermostat gaskets, 4-spark plugs, water impeller kit, power trim adode and lower unit anode.

40-60 EFI 4Cyl. 4 Stroke

Mercury Branded

100 HOUR SERVICE KIT



8M0097856

Oil filter, fuel filter, oil drain seal and 2-gearcase drain seals

75-115HP FourStroke (1.7L) S/N:1B366823 - 2B094995

Mercury Branded

300 HOUR SERVICE KIT



8M0097857

Oil filter, fuel filter, oil drain seal, 2-gearcase drain seals, 4-spark plugs, thermostat kit, water impeller kit, belt, power trim and lower unit anode.

75-115HP FourStroke (1.7L) S/N:1B366823 - 2B094995

Mercury Branded

100 HOUR SERVICE KIT



8M0097854

Oil filter, fuel filter and gearcase drain seal

75-115HP FourStroke (2.1L) S/N:2B094996 and Up

Mercury Branded

300 HOUR SERVICE KIT



8M0097855

Oil filter, fuel filter, gearcase drain seal, 4-spark plugs, thermostat kit, water impeller kit, power trim and lower unit anode.

75-115HP FourStroke (2.1L) S/N:2B094996 and Up

Mercury Branded

100 HOUR SERVICE KIT



8M0094232

Oil filter, low & high pressure fuel filter, gearcase drain seal.
150HP EFI 4 Stroke
Mercury Branded

300 HOUR SERVICE KIT



8M0094233

Oil filter, low & high pressure fuel filter, gearcase drain seal, 4-spark plugs, thermostat kit, water impeller kit, belt, 2-lower unit anodes and power trim anode
150HP EFI 4 Stroke
Mercury Branded

100 HOUR SERVICE KIT



8M0097858

Oil filter, low & high pressure fuel filter, oil drain seal and 2-gearcase drain seals
L6 Verado FourStroke
Mercury Branded

300 HOUR SERVICE KIT



8M0097859

Oil filter, low & high pressure fuel filter, oil drain seal, 2-gearcase drain seals, 6-spark plugs, thermostat kit, water impeller kit, belt and anode kit.
L6 Verado FourStroke
Mercury Branded

MERCRUISER MAINTENANCE

3.0L TKS

CAP AND ROTOR KIT
811635K 2

SPARK PLUG
33-816336Q
NGK, BPR6EFS

CARBURETOR FUEL FILTER
35- 53336Q

CARBURETOR REPAIR KIT
3302-804844002

FUEL PUMP FILTER
35-8M0046751

THERMOSTAT KIT
807252T 5
160 degree

V-BELT
57-862054Q
39-1/2 in. (1003 mm) length
57- 65607Q
37 in. (940 mm) length

OIL FILTER
35-866340K01

3.0L MPI

CAP AND ROTOR KIT
811635K 2

SPARK PLUG
33-816336Q
NGK, BPR6EFS

FUEL FILTER
35-866594K01
10 micron

THERMOSTAT KIT
807252T 5
160 degree

V-BELT
57-862054Q
39-1/2 in. (1003 mm) length
57- 65607Q
37 in. (940 mm) length

OIL FILTER
35-866340K01

4.3L TKS ALPHA

CAP AND ROTOR KIT
815407T 5

SPARK PLUG
33-862029
AC, MR43LTS

CARBURETOR FUEL FILTER
35- 53336Q

CARBURETOR REPAIR KIT
3302-804844002

WATER SEPARATING FUEL FILTER
35-802893T
25 micron

PCV VALVE
8M0065285

THERMOSTAT KIT
807252T 5
160 degree

THERMOSTAT
864493
170 degree, FWC

SERPENTINE BELT
57-865615Q04
1941 mm length
57-865615Q09
1780 mm length
57-865615Q03
2704 mm length

OIL FILTER
35-883702K
w/o remote oil
35-866340K01

SEA WATER PUMP IMPELLER KIT
47-8M0104229

4.3L TKS BRAVO

CAP AND ROTOR KIT
815407T 5

SPARK PLUG
33-862029
AC, MR43LTS

CARBURETOR FUEL FILTER
35- 53336Q

CARBURETOR REPAIR KIT
3302-804844002

WATER SEPARATING FUEL FILTER
35-802893T
25 micron

PCV VALVE
8M0065285

THERMOSTAT KIT
807252T 5
160 degree

THERMOSTAT
864493
170 degree, FWC

SERPENTINE BELT
57-865615Q03
2704 mm length
57-865615Q08
2535 mm length

OIL FILTER
35-883702K
w/o remote oil
35-866340K01

SEA WATER PUMP IMPELLER KIT
47-8M0104229

4.3L MPI ALPHA

CAP AND ROTOR KIT
898253T28

SPARK PLUG
33-8M2018369
NGK, ITR4A15 (Iridium)

WATER SEPARATING FUEL FILTER
35-802893T
25 micron

PCV VALVE
8M0065285

THERMOSTAT KIT
807252T 5
160 degree

THERMOSTAT
864493
170 degree, FWC

SERPENTINE BELT
57-865615Q04
1941 mm length
57-865615Q09
1780 mm length
57-865615Q03
2704 mm length

OIL FILTER
35-866340K01

SEA WATER PUMP IMPELLER KIT
47-8M0104229

4.3L MPI BRAVO

CAP AND ROTOR KIT
898253T28

SPARK PLUG
33-8M2018369
NGK, ITR4A15 (Iridium)

WATER SEPARATING FUEL FILTER
35-802893T
25 micron

PCV VALVE
8M0065285

THERMOSTAT KIT
807252T 5
160 degree

THERMOSTAT
864493
170 degree, FWC

SERPENTINE BELT
57-865615Q03
2704 mm length
57-865615Q08
2535 mm length

OIL FILTER
35-866340K01

SEA WATER PUMP IMPELLER KIT
47-8M0104229

4.5L MPI ALPHA

SPARK PLUG
33-8M0095454
NGK, BPR5EFS

FUEL FILTER ELEMENT
35-8M0060041
Under cowl replacement cartridge where applicable.

PCV VALVE
21-8M2017060

THERMOSTAT
8M0089715
140 degree
864493
170 degree, FWC

SERPENTINE BELT
57-8M0087881
1409 mm Length

SEPENTINE BELT
57-8M0088876
1687 mm length

OIL FILTER
35-866340K01

SEA WATER PUMP IMPELLER KIT
47-8M0104229

4.5L MPI BRAVO

SPARK PLUG
33-8M0095454
NGK, BPR5EFS

FUEL FILTER ELEMENT
35-8M0060041
Under cowl replacement cartridge where applicable.

PCV VALVE
21-8M2017060

THERMOSTAT
8M0089715
140 degree
864493
170 degree, FWC

SERPENTINE BELT
57-8M0097728
1713 mm length

SEPENTINE BELT
57-8M0088876
1687 mm length

OIL FILTER
35-866340K01

SEA WATER PUMP IMPELLER KIT
47-8M0104229

5.0L/5.7L TKS ALPHA

CAP AND ROTOR KIT
805759T 3

SPARK PLUG
33-816336Q
NGK, BPR6EFS

CARBURETOR FUEL FILTER
35- 53336Q

CARBURETOR REPAIR KIT
3302-804844002

WATER SEPARATING FUEL FILTER
35-802893T
25 micron

PCV VALVE
21-8M2017060

THERMOSTAT KIT
807252T 5
160 degree

SERPENTINE BELT
57-865615Q04
1941 mm length
57-865615Q09
1780 mm length

OIL FILTER
35-866340K01

5.0L/5.7L TKS BRAVO

CAP AND ROTOR KIT
805759T 3

SPARK PLUG
33-816336Q
NGK, BPR6EFS

CARBURETOR FUEL FILTER
35- 53336Q

CARBURETOR REPAIR KIT
3302-804844002

WATER SEPARATING FUEL FILTER
35-802893T
25 micron

PCV VALVE
21-8M2017060

THERMOSTAT KIT
807252T 5
160 degree

SERPENTINE BELT
57-865615Q03
2704 mm length
57-865615Q08
2535 mm length

OIL FILTER
35-866340K01

SEA WATER PUMP IMPELLER KIT
47- 59362T 6

5.0L/5.7L MPI ALPHA

CAP AND ROTOR KIT
8M0061335

SPARK PLUG
33-8M2018369
NGK, ITR4A15 (Iridium)

WATER SEPARATING FUEL FILTER
35-802893T
25 micron

PCV VALVE
21-8M2017060

THERMOSTAT KIT
807252T 5
160 degree

SERPENTINE BELT
57-865615Q04
1941 mm length
57-865615Q09
1780 mm length
57-865615Q08
2535 mm length

OIL FILTER
35-866340K01

SEA WATER PUMP IMPELLER KIT
47-8M0104229

5.0L/5.7L MPI BRAVO

CAP AND ROTOR KIT
8M0061335

SPARK PLUG
33-8M2018369
NGK, ITR4A15 (Iridium)

WATER SEPARATING FUEL FILTER
35-8M0093688
Replacement filter

PCV VALVE
21-8M2017060

THERMOSTAT KIT
807252T 5
160 degree

THERMOSTAT
864493
170 degree, FWC

SERPENTINE BELT
57-865615Q03
2704 mm length
57-865615Q06
2667 mm length
57-865615Q08
2535 mm length

OIL FILTER
35-866340K01

SEA WATER PUMP IMPELLER KIT
47-8M0104229

5.7L TKS MIE & TOWSPORTS

CAP AND ROTOR KIT
805759T 3

SPARK PLUG
33-816336Q
NGK, BPR6EFS

CARBURETOR FUEL FILTER
35- 53336Q

CARBURETOR REPAIR KIT
3302-804844002

WATER SEPARATING FUEL FILTER
35-802893T
25 micron

PCV VALVE
21-8M2017060

THERMOSTAT KIT
807252T 5
160 degree

SERPENTINE BELT
57-865615Q05
2233 mm length

OIL FILTER
35-866340K01

SEA WATER PUMP IMPELLER KIT
47- 59362T 6

5.7L MPI TOWSPORTS

CAP AND ROTOR KIT
8M0061335

SPARK PLUG
33-8M2018369
NGK, ITR4A15 (Iridium)

WATER SEPARATING FUEL FILTER
35-802893T
25 micron

PCV VALVE
21-8M2017060

THERMOSTAT KIT
807252T 5
160 degree

SERPENTINE BELT
57-865615Q05
2233 mm length

OIL FILTER
35-866340K01

SEA WATER PUMP IMPELLER KIT
47-8M0104229

5.7 & 6.2 MPI MIE

CAP AND ROTOR KIT
8M0061335

SPARK PLUG
33-8M2018369
NGK, ITR4A15 (Iridium)

WATER SEPARATING FUEL FILTER
35-8M0093688
Replacement filter

PCV VALVE
21-8M2017060

THERMOSTAT KIT
807252T 5
160 degree

THERMOSTAT
864493
170 degree, FWC

SERPENTINE BELT
57-865615Q05
2233 mm length

57-865615Q10
2195 mm length

OIL FILTER
35-866340K01

SEA WATER PUMP IMPELLER KIT
47-8M0104229

6.2L MPI BRAVO

CAP AND ROTOR KIT
8M0061335

SPARK PLUG
33-8M2018369
NGK, ITR4A15 (Iridium)

WATER SEPARATING FUEL FILTER
35-8M0093688
Replacement filter

PCV VALVE
21-8M2017060

THERMOSTAT KIT
807252T 5
160 degree

THERMOSTAT
864493
170 degree, FWC

SERPENTINE BELT
57-865615Q03
2704 mm length

57-865615Q06
2667 mm length

57-865615Q08
2535 mm length

OIL FILTER
35-866340K01

SEA WATER PUMP IMPELLER KIT
47-8M0104229

6.2L MPI BRAVO (MERCURY)

SPARK PLUG
33-8M0095454
NGK, BPR5EFS

FUEL FILTER ELEMENT
35-8M0060041
Under cowl replacement cartridge where applicable.

PCV VALVE
21-8M2017060

THERMOSTAT
8M0089715
140 degree

864493
170 degree, FWC

SERPENTINE BELT
57-8M0097728
1713 mm length

SEPENTINE BELT
57-8M0088876
1687 mm length

OIL FILTER
35-866340K01

SEA WATER PUMP IMPELLER KIT
47-8M0104229

8.1L MCM & MIE

SPARK PLUG
33-863622001
AC, 41-983 (Platinum)

WATER SEPARATING FUEL FILTER
35-8M0093688
Replacement filter

THERMOSTAT
8M0076464
160 Degree

SERPENTINE BELT
57-865635Q01
2519 mm length

57-865635Q02
2111 mm length

OIL FILTER
35-866340K01

SEA WATER PUMP IMPELLER KIT
47-8M0104229

8.2L MCM & MIE

SPARK PLUG
33-810883
NGK, BPR6ES

WATER SEPARATING FUEL FILTER
35-8M0093688
Replacement filter

PCV VALVE
8M0099429

THERMOSTAT
8M0045990
170 degree

SERPENTINE BELT
57-8M0045227
3157 mm

57-8M0045986
2287 mm

OIL FILTER
35-866340K01

SEA WATER PUMP IMPELLER KIT
47-8M0104229

QSD 2.0

AIR FILTER
8M0047848
Design II

35-879172143
Design I

WATER SEPARATING FUEL FILTER
35-879172104

THERMOSTAT
879150054

SERPENTINE BELT
57-879172120
Replacement belt

ENGINE ANODE ASSEMBLY
879194217
M18 x 1.5 Plug w/ thread-in anode (20mm length x 15mm O.D.)

OIL FILTER
35-895207
3.25 in. (83 mm) diameter

35-879312041
2.625 in. (67 mm) diameter

SEAWATER PUMP IMPELLER KIT
47-896332063
Jabsco

47-879312025
Sherwood

QSD 2.8

AIR FILTER
855514002

WATER SEPARATING FUEL FILTER
35-879172104

THERMOSTAT
8M0093561

SERPENTINE BELT
57-898101624
Replacement Belt

ENGINE ANODE ASSEMBLY
879194217
M18 x 1.5 Plug w/ thread-in anode (20mm length x 15mm O.D.)

OIL FILTER
35-895207
3.25 in. (83 mm) diameter

SEAWATER PUMP IMPELLER KIT
47-896332063
Jabsco

47-879312025
Sherwood

QSD 4.2

AIR FILTER
898272048
Foam

WATER SEPARATING FUEL FILTER
35-879172104

THERMOSTAT
879150054

SERPENTINE BELT
57-898101579
Replacement Belt

ENGINE ANODE ASSEMBLY
879194217
M18 x 1.5 Plug w/ thread-in anode (20mm length x 15mm O.D.)

OIL FILTER
35-895207
3.25 in. (83 mm) diameter

SEAWATER IMPELLER KIT
47-879194186
Jabsco

SEAWATER PUMP IMPELLER KIT
8M0056956
Sherwood

3.0L V6 TDI

AIR FILTER
35-8M6002131

WATER SEPARATING FUEL FILTER
35-8M0067337
Replacement element

FUEL FILTER
35-8M0067597
Element, Square

THERMOSTAT
8M0093480

SERPENTINE BELT
57-8M0093495
Alternator & Power steering

ANODE KIT
8M6002274
Block

OIL FILTER
35-8M0066483
Element

SEAWATER PUMP IMPELLER KIT
47-8M0067334

4.2L V8 TDI

AIR FILTER
8M0067617

WATER SEPARATING FUEL FILTER
35-8M6002390

THERMOSTAT
8M0086400

SERPENTINE BELT
57-8M0093513
Alternator

ANODE KIT
8M6002274
Block

OIL FILTER
35-8M0066483
Element

SEAWATER PUMP IMPELLER KIT
47-8M0067334

ALPHA STERNDRIVE

WATER IMPELLER REPAIR KIT
47-8M0100527

SEAL KIT
26- 88397A 1
Driveshaft Hsg
26-816575A 4
Gear Housing

ANODE KIT
888756K01
Aluminum anodes - For use in saltwater or freshwater.
888755K01
Magnesium anodes - For freshwater use only. Do not use in saltwater applications.

DRIVE INSTALLATION KIT
27- 94996T 2

SHIFT CABLE BELLOWS
74639A 2
Includes clamps

U-JOINT BELLOWS
816431A 1

EXHAUST BELLOWS - BELL HOUSING
18654A 1

SHIFT CABLE KIT
865436A03

BRAVO STERNDRIVE

SEAL KIT
26- 16709A 2
Driveshaft Hsg
26- 76868A04
Gearcase

ANODE KIT
888758K01
Aluminum anodes - For use in saltwater or freshwater.
888761K01
Aluminum anodes - For use in saltwater or freshwater
888761K02
Aluminum anodes - For use in saltwater or freshwater.

DRIVE INSTALLATION KIT
16755T 1

SHIFT CABLE BELLOWS
74639A 2
Includes clamps

U-JOINT BELLOWS
8M0062406

EXHAUST BELLOWS - BELL HOUSING
18654A 1

SHIFT CABLE KIT
815471T 1

Notes:

TABLE OF CONTENTS

Marketing and Point of Sale Materials 248

Pallet Display - Gallon Bottles 249
Parts and Accessory Display Rack 249
POP Display - Fuel Care System 249

Mercury 2-Stroke Oil 250

2-Stroke Multi-Fuel Outboards 253
Application and SKU Chart 250
Direct Injection (DI) Engine Oil 251
Premium Plus TCW3® 251
Premium TCW3® 252

Mercury 4-Stroke Marine Engine Oil and Oil Filters 254

Application and SKU Chart 254
Application and SKU Chart 254
FCW® 10W30 Marine Oil 255
FC-W® 25W40 Marine Oil 255
FC-W® 25W40 Synthetic Blend Marine Oil 256
MerCruiser Oil Filters- Gasoline 264
Oil Capacity Chart - 4-Stroke Outboards 258
Oil Capacity Chart - Gasoline Sterndrive/ Inboard Engines 259
Oil Capacity Chart - Hi-Perf Gasoline Engine . . 261
Oil Change Kits 257
Oil Filters for Four Stroke Outboards 262

Mercury Diesel Sterndrive/Inboard Oil and Oil Filters 266

Oil Capacity Chart - Diesel Engine 266
Oil Filters for MerCruiser Diesel Engines 267
SAE 15W40 Diesel Engine Oil 266
SKU Chart 266

Mercury Hi-Perf Engine Oil and Extreme Performance Gear Oil 269

Mercury Extreme Performance Gear Lube 271
Mercury High Performance 2-Stroke Oil 269
Mercury High Performance 4-Stroke Oil 269
Oil Capacity Chart - Hi-Perf Gasoline Engine . . 270

Mercury Corrosion Protection 272

Mercury Engine Coolant and Water System Antifreeze 273

Mercury Fuel System Care and Maintenance 275

Engine and Fuel System Cleaner 275
Fuel Stabilizer 276
Fuel Treatment 275

Mercury Gearcase Lubricant 278

High Performance Gear Lube Capacity Chart . . 281
High Performance Gear Lube - SAE 90 280
Premium Gear Lube Capacity Chart 279
Premium Gear Lube - SAE 80W90 278
SKU Chart 278

Mercury Gearcase Lubricant Accessories . . . 282

Mercury Greases 283

Grease Application Charts 284
Marine Grease 283
Multi-Purpose Grease 284

Mercury Paints and Finish 285

Force Colors 286
Mariner Colors 286
Mercury Colors 285
Mercury Racing Paint 286
Miscellaneous Paint and Finish Products 286

Mercury Steering Fluid 288

Quicksilver 2-Stroke Oil 289

Application and SKU Chart 289
Direct Injection (DI) Engine Oil 290
Premium Plus TCW-3® 290

Premium TCW3® 291

Quicksilver 4-Stroke Marine Engine Oil and Oil Filters 292

Application and SKU Chart 292
FCW® 10W30 Marine Oil 293
FCW® 10W40 Marine Oil 294
FCW® 25W40 Marine Oil 294
FC-W® 25W40 Synthetic Blend Marine Oil 295
FCW® 25W50 Synthetic Blend Marine Oil 295
FCW® 5W30 Marine Oil 293
Oil Capacity Chart - 4-Stroke Outboards 297
Oil Capacity Chart - Gasoline Sterndrive/ Inboard Engines 300
Oil Capacity Chart - Hi-Perf Gasoline Engine . . 302
Oil Change Kits 296
Oil Filters for FourStroke Outboards 298
Oil Filters for MerCruiser Gas Engines 303

Quicksilver Diesel Sterndrive/Inboard Oil and Oil Filters 304

Oil Capacity Chart - Diesel Engine 305
Oil Filters for MerCruiser Diesel Engines 306
SAE 15W40 305
SAE 5W30 304
SKU Chart 304

Quicksilver Powersports Lubricants 308

ATV/UTV 308
Motorcycle 308
Personal Watercraft (PWC) 309
Snowmobile 309

Quicksilver Corrosion Protection 310

Quicksilver Engine Coolant and Water System Antifreeze 311

Quicksilver Fuel System Care and Maintenance 314

Engine and Fuel System Cleaner 315
Fuel Stabilizer 316
Fuel Treatment 314

Quicksilver Gearcase Lubricant 317

Extreme Performance Gear Lube - SAE 90 320
High Performance Gear Lube Capacity Chart . . 320
High Performance Gear Lube - SAE 90 319
Premium Gear Lube Capacity Chart 318
Premium Gear Lube - SAE 80W90 317
SKU Chart 317

Quicksilver Gearcase Lubricant Accessories 322

Quicksilver Greases 323

Engine Assembly Grease 324
Grease Application Charts 324
Marine Grease 323
Multi-Purpose Grease 324

Quicksilver Paints and Finish 326

Force Colors 326
Mariner Colors 326
Mercury Colors 327
Propeller Paint 327
Surface Preparation and Finish 328

Quicksilver Steering Fluid 329

Shop Products for Engine Assembly and Maintenance 330

Adhesives and Sealants 330
Bearing Mount 332
Gasketing 332
Lubricants 333
Specialty 334
Surface Preparation 334
Thread Treatment 335

Shop Tools and Accessories 338

Barrel Pump 338
Crankcase Oil Pump and Adapter 338
Grease Guns 339
Oil Filter Wrenches 339

MARKETING AND POINT OF SALE MATERIALS

Pallet Display – Gallon Bottles



Side View Front & Side View

POP Display – Fuel Care System



Overall height: 54"
Height without header: 46"

Base: 15 ½" x 13"

PALLET DISPLAY - GALLON BOTTLES

This display easily transforms from a shrouded pallet to an attractive, ready-to-shop display in less than 30 seconds.
- Bottles are clearly visible and easily accessible from all sides
- Layer trays can be easily removed as product sells
- Contains 46% less corrugate than a pallet of regular cases
- Each pallet contains 180 gallon bottles

PREMIUM TCW3 - PALLET DISPLAY

92-858022Q41
Priced individually, sold @ multiples of 180

3.78 Liters (1 gallon) plastic bottle
Quicksilver Branded

PREMIUM PLUS TCW3 OIL - PALLET DISPLAY

92-858027Q51
Priced individually, sold @ multiples of 180

3.78 Liters (1 Gallon) plastic bottle
Quicksilver Branded

POP DISPLAY - FUEL CARE SYSTEM

Fuel care display holds 3 cases of Mercury or Quicksilver fuel care products in 12 ounce bottles - 1 case of Quickare, 1 case of Quickleen and 1 case of Quickstor.

Display comes with easy to follow instructions

Fuel care products sold separately.

FUEL CARE SYSTEM POP DISPLAY

94-8M0050531
Display is free with the purchase of two cases of 12 ounce bottles of any fuel care system products.

PARTS AND ACCESSORY DISPLAY RACK

Parts and Accessories is excited to offer a stand-alone product display. The two-sided display provides ample adjustable shelf space on one side and a removeable hanging grid on the other for Point-of-Sale product. Sturdy construction allows for heavier products to be displayed, yet mobile because of the wheeled casters.

MERCURY P&A DISPLAY STAND



93-8M0089392
Display includes five storage shelves, rear wire grid, six wire hooks, four casters and three marketing signs.
Some assembly required.

QUICKSILVER P&A DISPLAY STAND



93-8M0089391
Display includes five storage shelves, rear wire grid, six wire hooks, four casters and three marketing signs.
Some assembly required.

MERCURY 2-STROKE OIL

APPLICATION AND SKU CHART

2-Stroke Outboard Oil Application Chart

PRODUCT	Low HP: 2.5HP to 30HP	Mid HP: 40 HP to 115HP	High HP: Above 115HP	All HP
	Carubureted or EFI	Carbureted or EFI	Carbureted or EFI	Direct Injection
Premium	*Good	Good	Not recommended	Not recommended
Premium Plus	Better	*Better	*Better	Better
DI Engine Oil	Best	Best	Best	*Best

Mercury 2-Stroke Oil SKU Chart

Item Number	Qty per Case	Container Size	Pallet Qty	Btl Length (in)	Btl Depth (in)	Btl Height (in)	Btl Weight (lb)	Case Length (in)	Case Width (in)	Case Height (in)	Case Weight (lb)	Pallet Weight (lb)
PREMIUM TCW-3® FOR 2-CYCLE OUTBOARDS (EXCEPT OPTIMAX & DFI)												
92-858020K01	12	PINT	960	3.322	2	7.75	1.083	10.5	8.6	7.9	13	1105
92-858021K01	6	QUART	468	4.2	2.375	9.25	2.083	8.9	7.7	10.1	12.5	1040
92-858022K01	3	GALLON	180	7.5	5.1	11.8	8.167	15.875	8	12.875	24.5	1520
92-858023K01	2	2.5 GAL.	72	9.1	6.8	14.5	20	9.78	14.5	14.5	40	1490
92-858024Q01	1	55 GAL.	4	23	23	34	434	23	23	34	434	1786
PREMIUM PLUS TCW-3® FOR 2-CYCLE OUTBOARDS												
92-858025K01	12	PINT	960	3.322	2	7.75	1.083	10.5	8.6	7.9	13	1105
92-858026K01	6	QUART	468	4.2	2.375	9.25	2.083	8.9	7.7	10.1	12.5	1040
92-858027K01	3	GALLON	180	7.5	5.1	11.8	8.167	15.875	8	12.875	24.5	1520
92-858028K01	2	2.5 GAL.	72	9.1	6.8	14.5	20	9.78	14.5	14.5	40	1490
92-858029Q01	1	55 GAL.	4	23	23	34	434	23	23	34	434	1786
DIRECT INJECTED (DI) OUTBOARDS												
92-858037K01	3	GALLON	180	7.5	5.1	11.8	8.167	15.875	8	12.875	24.5	1520
92-858038K01	2	2.5 GAL.	72	9.1	6.8	14.5	20	9.78	14.5	14.5	40	1490
92-858039Q01	1	55 GAL.	4	23	23	34	434	23	23	34	434	1786

DIRECT INJECTION (DI) ENGINE OIL

Mercury's exclusive formulation offers the maximum protection for DI (direct injection) outboard engines. Continued use this oil will:
• Provide outstanding wear and corrosion protection which help extend engine life
• Minimize performance-robbing carbon deposits
• Maintain peak engine performance and reliability
• Reduce smoke

Recommended for use in direct injection two-cycle engines such as Mercury OptiMax®

Exceeds all outboard manufacturer's warranty requirements and recommendations for use in direct injection applications

DIRECT INJECTION ENGINE OIL



92-858037K01
Priced individually, sold @ multiples of 3
3.78 L (1 US gal) plastic bottle
Mercury Branded

DIRECT INJECTION ENGINE OIL



92-858038K01
Priced individually, sold @ multiples of 2
9.46 L (2 1/2 US gal) plastic bottle
Mercury Branded

DIRECT INJECTION ENGINE OIL



92-858039Q01
208 L (55 Gal) drum
Quicksilver Branded

PREMIUM PLUS TCW3®

Mercury's exclusive formulation offers extreme protection for mid- to high-horsepower outboard engines. Continued use this oil will:
• Provide outstanding wear and corrosion protection which help extend engine life
• Minimize performance-robbing carbon deposits
• Maintain peak engine performance and reliability

Recommended for use in oil-injected, carbureted or electronic fuel injected (EFI) mid- to high-horsepower engines such as Mercury®, Mariner® and Force® outboards and Mercury Sport Jet® engines

Meets or exceeds all outboard and personal watercraft manufacturers' warranty requirements and recommendations for use of a TC-W3® oil

PREMIUM PLUS TCW3 OIL



92-858025K01
Priced individually, sold @ multiples of 12
473 mL (16 fl oz) plastic bottle
Mercury Branded

PREMIUM PLUS TCW3 OIL



92-858026K01
Priced individually, sold @ multiples of 6
946 mL (32 fl oz) plastic bottle
Mercury Branded

PREMIUM PLUS TCW3 OIL



92-858027K01
Priced individually, sold @ multiples of 3
3.78 L (1 US gal) plastic bottle
Mercury Branded

PREMIUM PLUS TCW3 OIL



92-858028K01
Priced individually, sold @ multiples of 2
9.46 L (2.5 US gal) plastic bottle
Mercury Branded

PREMIUM PLUS TCW3 OIL



92-858029Q01
208 L (55 US gal) drum
Quicksilver Branded

PREMIUM TCW3®

Mercury's exclusive formulation provides superior protection to help extend the life of small horsepower, outboard engines. Continued use of Mercury® Premium 2-Cycle oil also helps:
• Prevent corrosion of internal components
• Maintain peak engine performance and reliability

This all weather formula provides protection in temperatures down to -13° F (-25° C).

Recommended for use in pre-mix applications for low-horsepower, carbureted engines such as, outboards, personal watercraft, snowmobiles, motorcycles and chainsaws

Meets all outboard and personal watercraft manufacturers' warranty requirements and recommendations for use of a TCW3® oil

PREMIUM TCW3 OIL



92-858020K01
Priced individually, sold @ multiples of 12
473 mL (16 fl oz) plastic bottle
Mercury Branded, Point of Sale Packaged.

PREMIUM TCW3 OIL



92-858021K01
Priced individually, sold @ multiples of 6
946 mL (32 fl oz) plastic bottle
Mercury Branded

PREMIUM TCW3 OIL



92-858022K01
Priced individually, sold @ multiples of 3
3.78 L (1 US gal) plastic bottle
Mercury Branded

PREMIUM TCW3 OIL



92-858023K01
Priced individually, sold @ multiples of 2
9.46 L (2.5 US gal) plastic bottle
Mercury Branded

PREMIUM TCW3 OIL



92-858024Q01
208 L (55 US gal) drum
Quicksilver Branded

2-STROKE MULTI-FUEL OUTBOARDS

Specialty oil for multi-fuel engines such as JP OptiMax

JP OPTIMAX OIL



92-858092A01

JP OptiMax Multi-Fuel
Priced individually, sold @ multiples of 2
9.46 L (2.5 gallons) bottle
Mercury Branded

JP OPTIMAX OIL



92-858093A01

JP OptiMax Multi-Fuel

208 L (55 Gallons) drum
Mercury Branded

MERCURY 4-STROKE MARINE ENGINE OIL AND OIL FILTERS

APPLICATION AND SKU CHART

4-Stroke Outboard Oil Application Chart

Product	Low HP: 2.5HP to 30HP	Mid HP: 40HP to 115HP	High HP: Above 115HP	Catalyzed/Non Catalyzed Engines
10W30	Good	Good	Good	Not Recommended
25W40	Good	Good	Good	Good
25W40 Synthetic Blend	Best	Best	Best	Best

Mercury 4-Stroke Oil SKU Chart

Item Number	Qty per Case	Container Size	Pallet Qty	Btl Length (in)	Btl Depth (in)	Btl Height (in)	Btl Weight (lb)	Case Length (in)	Case Width (in)	Case Height (in)	Case Weight (lb)	Pallet Weight (lb)
FC-W® SAE 10W30 FOR 4-STROKE MARINE ENGINES												
92-8M0078625	6	QUART	468	4.2	2.375	9.25	2.083	8.9	7.7	10.1	12.5	1040
92-8M0078626	3	GALLON	180	7.5	5.1	11.8	8.167	15.875	8	12.875	24.5	1520
92-8M0078618	1	55 GAL	4	23	23	34	434	23	23	34	434	1786
FC-W® SAE 25W40 FOR 4-STROKE MARINE ENGINES												
92-8M0078627	6	QUART	468	4.2	2.375	9.25	2.083	8.9	7.7	10.1	12.5	1040
92-8M0078628	3	GALLON	180	7.5	5.4	11.8	8.167	15.875	8	12.875	24.5	1520
92-8M0078621	1	55 GAL	4	23	23	34	434	23	23	34	434	1786
FC-W® SAE 25W40 SYNTHETIC BLEND FOR 4-STROKE MARINE ENGINES												
92-8M0078629	6	QUART	468	4.2	2.375	9.25	2.083	8.9	7.7	10.1	12.5	1040
92-8M0078630	3	GALLON	180	7.5	5.4	11.8	8.167	15.875	8	12.875	24.5	1520
92-8M0078624	1	55 GAL	4	23	23	34	434	23	23	34	434	1786

APPLICATION AND SKU CHART

Sterndrive/Inboard Gas Engine Oil Application Chart

PRODUCT	CATALYZED ENGINE	NON CATALYZED ENGINE
10W30	Not Recommended	Not Recommended
25W40	Good	Good
25W40 Synthetic Blend	Best	Best

Mercury Sterndrive/Inboard Gas Engine Oil SKU Chart

Item Number	Qty per Case	Container Size	Pallet Qty	Btl Length (in)	Btl Depth (in)	Btl Height (in)	Btl Weight (lb)	Case Length (in)	Case Width (in)	Case Height (in)	Case Weight (lb)	Pallet Weight (lb)
FC-W® SAE 25W40 FOR MAREINE ENGINES												
92-8M0078627	6	QUART	468	4.2	2.375	9.25	2.083	8.9	7.7	10.1	12.5	1040
92-8M0078628	3	GALLON	180	7.5	5.1	11.8	8.167	15.875	8	12.875	24.5	1520
92-8M0078621	1	55 GAL.	4	23	23	34	434	23	23	34	434	1786
FC-W® SAE 25W40 SYNTHETIC BLEND FOR MARINE ENGINES												
92-8M0078629	6	QUART	468	4.2	2.375	9.25	2.083	8.9	7.7	10.1	12.5	1040
92-8M0078630	3	GALLON	180	7.5	5.1	11.8	8.167	15.875	8	12.875	24.5	1520
92-8M0078624	1	55 GAL.	4	23	23	34	434	23	23	34	434	1786

Item Number	Qty per Case	Container Size	Pallet Qty	Btl Length (in)	Btl Depth (in)	Btl Height (in)	Btl Weight (lb)	Case Length (in)	Case Width (in)	Case Height (in)	Case Weight (lb)	Pallet Weight (lb)
FC-W (CATALYST COMPATIBLE)™ SAE 25W40 SYNTHETIC BLEND FOR MARINE ENGINES												
92-8M0078629	6	QUART	468	4.2	2.375	9.25	2.083	8.9	7.7	10.1	12.5	1040
92-8M0078630	3	GALLON	180	7.5	5.1	11.8	8.167	15.875	8	12.875	24.5	1520
92-8M0078624	1	55 GAL.	4	23	23	34	434	23	23	34	434	1786

FCW® 10W30 MARINE OIL

Mercury's all new 4-Stroke oil technology outperforms automotive oils in marine applications because of its specialized additive package designed for marine engines. The NEW mineral 4-Stroke oil is also now approved for use in all Outboard Engines; previously only our synthetic blend could make this claim.
3 things to know:
• For use in all 4-Stroke marine engines - New formula 4-Stroke oils are engineering approved for use in certain marine 4-Stroke Outboard applications and exceeds all Marine industry 4-Stroke oil requirements including FC-W and FC-W Catalyst Compatible. In addition, all 10W30 & 25W40 oils are now fully FC-W Catalyst Compatible.
• Flagship Engine and Corrosion Protection - Industry leading strength and viscosity retention and ultimate corrosion and wear protection
• The most recommended Marine Oil - Over 5 years of engineering and development by the largest marine engine manufacture in the world.

10W30 is recommended for certain operating temperatures and manual start applications.

10W30 MARINE OIL



92-8M0078625
Priced individually, sold @ multiples of 6
946 mL (32 fl oz) plastic bottle
Mercury Branded

10W30 MARINE OIL



92-8M0078626
Priced individually, sold @ multiples of 3
3.78 L (1 US gal) plastic bottle
Mercury Branded

10W30 MARINE OIL



92-8M0078618
208 L (55 US gal) drum
Quicksilver Branded

FC-W® 25W40 MARINE OIL

Mercury's all new 4-Stroke oil technology outperforms automotive oils in marine applications because of its specialized additive package designed for marine engines.

3 things to know:

• For use in all 4-Stroke marine engines - New formula 4-Stroke oils are engineering approved for all marine 4-Stroke applications, including: Outboard, MerCruiser, High Performance, stern drive/Inboard, and exceeds all Marine industry 4-Stroke oil requirements including FC-W and FC-W Catalyst Compatible.
• Flagship Engine and Corrosion Protection - Industry leading strength and viscosity retention and ultimate corrosion and wear protection.
• The most recommended Marine Oil - Over 5 years of engineering and development by the largest marine engine manufacture in the world.

25W40 recommended in all marine engines.

25W40 MARINE OIL



92-8M0078627
Priced individually, sold @ multiples of 6
946 mL (32 fl oz) plastic bottle
Mercury Branded

25W40 MARINE OIL



92-8M0078628
Priced individually, sold @ multiples of 3
3.78 L (1 US gal) plastic bottle
Mercury Branded

25W40 MARINE OIL



92-8M0078621
208 L (55 US gal) drum
Quicksilver Branded

FC-W® 25W40 SYNTHETIC BLEND MARINE OIL

Mercury's all new 4-Stroke oil technology outperforms automotive oils in marine applications because of its specialized additive package designed for marine engines.

3 things to know:

• For use in all 4-Stroke marine engines - New formula 4-Stroke oils are engineering approved for all marine 4-Stroke applications, including: Outboard, MerCruiser, High Performance, stern drive/Inboard, and exceeds all Marine industry 4-Stroke oil requirements including FC-W and FC-W Catalyst Compatible.
• Flagship Engine and Corrosion Protection - Industry leading strength and viscosity retention and ultimate corrosion and wear protection
• The most recommended Marine Oil - Over 5 years of engineering and development by the largest marine engine manufacture in the world.

25W40 Synthetic Blend recommended in all marine engines (BEST Choice).

25W40 SYNTHETIC BLEND MARINE OIL



92-8M0078629
Priced individually, sold @ multiples of 6
946 mL (32 fl oz) plastic bottle
Mercury Branded

25W40 SYNTHETIC BLEND MARINE OIL



92-8M0078630
Priced individually, sold @ multiples of 3
3.78 L (1 US gal) plastic bottle
Mercury Branded

25W40 SYNTHETIC BLEND MARINE OIL



92-8M0078624
208 L (55 Gal) drum
Quicksilver Branded

OIL CHANGE KITS

Mercury oil change kits contain industry-leading Mercury 25W-40 Marine Engine Oil. Over five years of engineering and development went into the exclusive Flagship Protection forumla which features a high-tech, advanced set of anti-wear additives that provide up to 33% better camshaft wear protection and the highest levels of corrosion and oxidation protection. Designed to maintain engine reliability and performance, Mercury 25W-40 Marine Engien Oil has been proven to hold its viscoscity ratings longer in industry wear testing than other oils on the market. Mercury Oil, combined with a genuine Mercury Oil Filter team up to provide the highest degree of protection one can get on the water.
Mercury launches new convenient oil change kits to make it easy for customers to change their oil. Each kit contains all the items needed to change oil in select Mercury 4-Stroke Outboards:
25W-40 Marine Engine Oil featuring Flagship Protection
Oil Filter
Drain Plug Seal
Drip Tray (where applicable)
Complete instructions printed right on the box

15/20 HP CARB 25W40 MARINE OIL



8M0081914
Priced individually, sold @ multiples of 8
1 L (33.8 fl oz) plastic bottle
Mercury Branded

25/30 HP EFI 25W40 MARINE OIL



8M0081915
Priced individually, sold @ multiples of 4
2 L (67.6 fl oz) plastic bottle
Mercury Branded

40/50/60 HP EFI 25W40 MARINE OIL



8M0081916
Priced individually, sold @ multiples of 4
3 L (101.4 fl oz) plastic bottle
Mercury Branded

75/90/115 HP EFI (1.7L) 25W40 MARINE OIL



8M0081917
Priced individually, sold @ multiples of 2
5 L (1.41 US gal) plastic bottle
Mercury Branded

75/90/115 HP EFI (2.1L) 10W30 MARINE OIL



8M0107510
Serial Number: 2B094996 & Up
Priced individually, sold @ multiples of 2
5 L (1.41 US gal) plastic bottle
Mercury Branded

MERCURY 4-STROKE MARINE ENGINE OIL AND OIL FILTERS

150 HP 10W30 MARINE OIL



8M0107512
Priced individually, sold @ multiples of 2
6 L (1.58 US gal) plastic bottle
Mercury Branded

OIL CAPACITY CHART - 4-STROKE OUTBOARDS

Crankcase Oil Capacity Chart & MPP Filters

Model	Model Note	Year Range	Metric Crankcase Capacity	US Crankcase Capacity	Canister Filter
2.5/3.5 FourStroke		2006 - 2016	0.30 liter (300ml)	0.31 QT. (10 oz.)	N/A
4/5/6 FourStroke		1999 - 2016	0.45 liter (450ml)	0.48 QT. (15.2 oz.)	N/A
8 FourStroke	232cc	1995 - 2000	1.0 liter (1,000ml)	1.05 QT. (35 oz.)	N/A
8 FourStroke	323cc	2001 - 2004	1.0 liter (1,000ml)	1.05 QT. (35 oz.)	35-822626K03
8 FourStroke	209cc	2005 - 2016	0.80 liter (800ml)	0.85 QT. (27 oz.)	N/A
9.9 FourStroke	232cc	1995 - 1998	1.0 liter (1,000ml)	1.05 QT. (35 oz.)	N/A
9.9 FourStroke	323cc	1999 - 2004	1.0 liter (1,000ml)	1.05 QT. (35 oz.)	35-822626K03
9.9 FourStroke	209cc	2005 - 2016	0.80 liter (800ml)	0.85 QT. (27 oz.)	N/A
15 FourStroke	323cc	1998 - 2008	1.0 liter (1,000ml)	1.05 QT. (35 oz.)	35-822626K03
15 FourStroke	351cc	2008 - 2016	1.0 liter (1,000ml)	1.05 QT. (35 oz.)	35-822626K03
20 FourStroke	351cc	2008 - 2016	1.0 liter (1,000ml)	1.05 QT. (35 oz.)	35-822626K03
25 FourStroke	498cc	1998 - 2005	3.0 liter (3,000ml)	3.17 QT. (106 oz.)	35-8M0065104
25 FourStroke	492cc	2006 - 2016	1.8 liter (1,800ml)	1.90 QT. (63 oz.)	35-822626K03
30 FourStroke	747cc	1999 - 2005	3.0 liter (3,000ml)	3.17 QT. (106 oz.)	35-8M0065104
30 FourStroke	492cc	2006 - 2016	1.8 liter (1,800ml)	1.90 QT. (63 oz.)	35-822626K03
40 FourStroke	747cc, 3 cylinder	1999 - 2016	3.0 liter (3,000ml)	3.17 QT. (106 oz.)	35-8M0065104
40 FourStroke	996cc, 4 cylinder	2001 - 2016	3.0 liter (3,000ml)	3.17 QT. (106 oz.)	35-8M0065104
50 FourStroke	935cc, 4 cylinder	1995 - 2000	3.0 liter (3,000ml)	3.17 QT. (106 oz.)	35-8M0065104
50 FourStroke	996cc, 4 cylinder	2001 - 2016	3.0 liter (3,000ml)	3.17 QT. (106 oz.)	35-8M0065104
60 FourStroke	996cc, 4 cylinder	2001 - 2016	3.0 liter (3,000ml)	3.17 QT. (106 oz.)	35-8M0065104
75 FourStroke	Carbureted	2000 - 2005	5.0 liter (5,000ml)	5.28 QT. (169 oz.)	35-8M0065104
75 FourStroke	EFI, 1596cc, 1B366822 & below	2006	4.5 liter (4,500ml)	4.80 QT. (160 oz.)	35-8M0065104
75 FourStroke	EFI, 1731cc, 1B366823-2B094995	2006 - 2014	5.0 liter (5,000ml)	5.28 QT. (169 oz.)	35-877761K01
75 FourStroke	2B094996 and above	2014 - 2016	5.2 liter (5,200ml)	5.5 QT. (176 oz.)	35-8M0065104

Model	Model Note	Year Range	Metric Crankcase Capacity	US Crankcase Capacity	Canister Filter
90 FourStroke	Carbureted	2000 - 2005	5.0 liter (5,000ml)	5.28 QT. (169 oz.)	35-8M0065104
90 FourStroke	EFI, 1596cc, 1B366822 & below	2006	4.5 liter (4,500ml)	4.80 QT. (160 oz.)	35-8M0065104
90 FourStroke	EFI, 1731cc, 1B366823-2B094995	2006 - 2014	5.0 liter (5,000ml)	5.28 QT. (169 oz.)	35-877761K01
90 FourStroke	2B094996 and above	2014 - 2016	5.2 liter (5,200ml)	5.5 QT. (176 oz.)	35-8M0065104
115 FourStroke	EFI, 1741cc, 1B366822 & below	2001 - 2006	5.0 liter (5,000ml)	5.28 QT. (169 oz.)	35-8M0065104
115 FourStroke	EFI, 1731cc, 1B366823-2B094995	2006 - 2014	5.0 liter (5,000ml)	5.28 QT. (169 oz.)	35-877761K01
115 FourStroke	2B094998 and above	2014 - 2016	5.2 liter (5,200ml)	5.5 QT. (176 oz.)	35-8M0065104
150 FourStroke	EFI, 1B905505 and up	2011 - 2016	6.0 liter (6,000ml)	6.34 QT. (211 oz.)	35-877761K01
135 Verado	4 cylinder	2006 - 2016	6.0 liter (6,000ml)	6.34 QT. (211 oz.)	35-877767K01
150 Verado	4 cylinder	2006 - 2016	6.0 liter (6,000ml)	6.34 QT. (211 oz.)	35-877767K01
175 Verado	4 cylinder	2006 - 2016	6.0 liter (6,000ml)	6.34 QT. (211 oz.)	35-877767K01
200 Verado	4 cylinder	2007 - 2016	6.0 liter (6,000ml)	6.34 QT. (211 oz.)	35-877767K01
225 FourStroke	EFI	2003 - 2006	6.0 liter (6,000ml)	6.34 QT. (211 oz.)	35-822626Q15
200 Verado	6 cylinder	2005 - 2016	7.0 liter (7,000ml)	7.40 QT. (246 oz.)	35-877769K01
225 Verado	6 cylinder	2005 - 2016	7.0 liter (7,000ml)	7.40 QT. (246 oz.)	35-877769K01
250 Verado	6 cylinder	2005 - 2016	7.0 liter (7,000ml)	7.40 QT. (246 oz.)	35-877769K01
275 Verado	6 cylinder	2005 - 2016	7.0 liter (7,000ml)	7.40 QT. (246 oz.)	35-877769K01
300 Verado	6 cylinder	2007 - 2016	7.0 liter (7,000ml)	7.40 QT. (246 oz.)	35-877769K01
350 Verado	6 cylinder	2015 - 2016	7.0 liter (7,000ml)	7.40 QT. (246 oz.)	35-877769K01
400R Verado	6 cylinder	2015 - 2016	7.0 liter (7,000ml)	7.40 QT. (246 oz.)	35-877769K01

OIL CAPACITY CHART - GASOLINE STERNDRIVE/INBOARD ENGINES

The engine oil capacity is only an Approximate, ALWAYS use dipstick to determine exact quantity of oil required.

MerCruiser Gas Engine Oil Capacity

Model	Make	CID/Litre	Cyl.	Year Range	Serial # Range	Approx. Oil Pan Capacity w/ New Filter(1)
MCM 60	Renault	68/1.1L	I/L 4	1965 - 1968	1887079 - 2049044	2-3/4 US qt (2.6 L)
MCM 80	Renault	80/1.3L	I/L 4	1966 - 1969	2049045 - 2851423	5 US qt (4.7 L)
MCM 90	Renault	96/1.6L	I/L 4	1970 - 1972	2851424 - 3226957	5 US qt (4.7 L)
MCM 110/120/ 2.5L	GM	153/2.5L	I/L 4	1963 - 1989	1537370 - 0C853255	4 US qt (3.8 L)
MCM 140/ 3.0L/LX	GM	181/3.0L	I/L 4	1968 - 2016	2508261 and up	4 US qt (3.8 L)
MCM 470/165/170/ 3.7L	Mercury	224/3.7L	I/L 4	1976 - 1989	4208730 and up	5-1/2 US qt (5.2 L)
MCM 485	Mercury	224/3.7L	I/L 4	1980 - 1982	5685394 - 6218036	5-3/4 US qt (5.4 L)
MCM 488/180/190/ 3.7LX	Mercury	224/3.7L	I/L 4	1983 - 1989	6170297 and up	6-1/2 US qt (6.1 L)
MCM 140	GM	194/3.2L	I/L 6	1963	1538930 - 1725960	5 US qt (4.7 L)
MCM 160/165	GM	250/4.1L	I/L 6	1967 - 1981	2048022 - 5813433	5 US qt (4.7 L)
MCM 200	GM	292/4.8L	I/L 6	1969	2453769 - 2712072	6 US qt (5.7 L)
MCM 185 (4 bbl)	GM	229/3.8L	V-6	1983 - 1984	6330183 - 6919655	4-1/2 US qt (4.3 L)
MCM 175/185/205	GM	262/4.3L	V-6	1985 - 1987	0A331455 - 0B773242	4-1/2 US qt (4.3 L)
MCM 262 Mag EFI	GM	262/4.3L	V-6	1996 - 1997	0F803800 - 0K999999	4-1/2 US qt (4.3 L)
MCM 4.3L/LX/LH/LXH	GM	262/4.3L	V-6	1988 - 2001	0B773243 - 0M299999	4-1/2 US qt (4.3 L)

MERCURY 4-STROKE MARINE ENGINE OIL AND OIL FILTERS

Model	Make	CID/Litre	Cyl.	Year Range	Serial # Range	Approx. Oil Pan Capacity w/ New Filter(1)
MCM 4.3L EFI	GM	262/4.3L	V-6	1998 - 2001	0L012009 - 0M299999	4-1/2 US qt (4.3 L)
MCM 4.3L & MPI	GM	262/4.3L	V-6	2002 - 2016	0M300000 and up	4 US qt (3.8 L)
MCM 888	Ford	302/4.9L	V-8	1971 - 1977	3108723 - 4887829	6 US qt (5.7 L)
MCM/MIE 225	Ford	302/4.9L	V-8	1973 - 1974	3385721 - 4176999	6 US qt (5.7 L)
MCM/MIE 215	Ford	302/4.9L	V-8	1970 - 1972	2781153 - 3563181	7 US qt (6.6 L)
MCM 190	GM	283/4.6L	V-8	1963 - 1964	1564539 - 1730903	5 US qt (4.7 L)
MCM 228	GM	305/5.0L	V-8	1977 - 1978	4765100 - 5170008	5 US qt (4.7 L)
MCM 200/ 5.0L/898	GM	305/5.0L	V-8	1977 - 1995	4762210 - 0F600999	5 US qt (4.7 L)
MCM 228/230/ 5.0LX	GM	305/5.0L	V-8	1979 - 1995	5170009 - 0F600999	5-1/2 US qt (5.2 L)
MCM 5.0L & EFI	GM	305/5.0L	V-8	1998 - 2002	0L012052 - 0M299999	5-1/2 US qt (5.2 L)
MCM 5.0L & MPI	GM	305/5.0L	V-8	2002 - 2016	0M300000 and up	4-1/2 US qt (4.25 L)
MIE 198/228/230/ 5.0L	GM	305/5.0L	V-8	1977 - 1988	4762210 - 0B788151	6 US qt (5.7 L)
MCM 225	GM	327/5.4L	V-8	1963 - 1966	1539620 - 2278646	5 US qt (4.7 L)
MCM 225/250	GM	327/5.4L	V-8	1967 - 1969	2278647 - 2694014	7 US qt (6.6 L)
MIE 225/250	GM	327/5.4L	V-8	1968	2278647 - 2694014	6 US qt (5.7 L)
MCM 250/ 255	GM	350/5.7L	V-8	1975 - 1977	4175500 - 4908849	5 US qt (4.7 L)
MCM 260/ 5.7L/LX & EFI	GM	350/5.7L	V-8	1978 - 2002	4908850 - 0M299999	5-1/2 US qt (5.2 L)
MCM 350 Mag, EFI & MPI	GM	350/5.7L	V-8	1986 - 2002	0A635178 - 0M299999	5-1/2 US qt (5.2 L)
MCM 350 Mag & MPI	GM	350/5.7L	V-8	2002 - 2016	0M300000 and up	4-1/2 US qt (4.25 L)
MCM 5.7L	GM	350/5.7L	V-8	2002 - 2016	0M300000 and up	4-1/2 US qt (4.25 L)
MIE 255/260/ 5.7L	GM	350/5.7L	V-8	1975 - 1993	4175500 - 0D839999	6 US qt (5.7 L)
MIE 5.7L & EFI	GM	350/5.7L	V-8	1993 - 1997	0D840000 - 0K999999	4 US qt (3.8 L)
MIE 5.7L/ 350 Mag MPI	GM	350/5.7L	V-8	1998 - 2002	0L002003 - 0M299999	5-1/2 US qt (5.2 L)
MIE 5.7L/ 350 Mag MPI	GM	350/5.7L	V-8	2002 - 2016	0M300000 and up	4-1/2 US qt (4.25 L)
Ski 5.7L	GM	350/5.7L	V-8	1985 - 1989	0A338553 - 0C756666	4 US qt (3.8 L)
Ski 5.7L/ 350 Mag & MPI	GM	350/5.7L	V-8	1990 - 1997	0C756667 - 0K999999	5 US qt (4.7 L)
Ski 5.7L/ 350 Mag MPI	GM	350/5.7L	V-8	1998 - 2002	0L002005 - 0M299999	5-1/2 US qt (5.2 L)
Ski 5.7L/ 350 Mag MPI	GM	350/5.7L	V-8	2002 - 2016	0M300000 and up	4-1/2 US qt (4.25 L)
Black Scorpion Ski (Gen+)	GM	350/5.7L	V-8	1996 - 1997	0F800000 - 0K999999	5 US qt (4.7 L)
Black Scorpion Ski (Gen+)	GM	350/5.7L	V-8	1998 - 2001	0L002500 - 0M391599	5-1/2 US qt (5.2 L)
Black Scorpion Ski (Gen+)	GM	350/5.7L	V-8	2003 - 2016	0M391600 and up	4-1/2 US qt (4.25 L)
MCM 233/255	Ford	351/5.8L	V-8	1973 - 1977	3258728 - 4902304	5 US qt (4.7 L)
MIE 233/255	Ford	351/5.8L	V-8	1973 - 1976	3258728 - 4775784	7 US qt (6.6 L)
MX 6.2L MPI	GM/Mercury	377/6.2L	V-8	2000 - 2002	0L680003 - 0M299999	5-1/2 US qt (5.2 L)
MX 6.2L MPI	GM/Mercury	377/6.2L	V-8	2002 - 2016	0M300000 and up	4-1/2 US qt (4.25 L)
MX 6.2L MPI MIE	GM/Mercury	377/6.2L	V-8	1999 - 2002	0L670000 - 0M299999	5-1/2 US qt (5.2 L)
MX 6.2L MPI MIE & Ski	GM/Mercury	377/6.2L	V-8	2002 - 2016	0M300000 and up	4-1/2 US qt (4.25 L)
MX 6.2L Blk Scorpion Ski	GM/Mercury	377/6.2L	V-8	2001 - 2003	0L670015 - 0M391599	5-1/2 US qt (5.2 L)
MX 6.2L Blk Scorpion Ski	GM/Mercury	377/6.2L	V-8	2003 - 2016	0M391750 and up	4-1/2 US qt (4.25 L)
MCM 325	GM	427/7.0L	V-8	1969 - 1972	2278747 - 3780449	8 US qt (7.6 L)
MIE 325	GM	427/7.0L	V-8	1968 - 1974	2278747 - 3780449	7 US qt (6.6 L)
MCM 330	GM	454/7.4L	V-8	1977 - 1981	4623115 - 6083144	6 US qt (5.7 L)
MCM 330 & 454 Mag Alpha	GM	454/7.4L	V-8	1982 - 1988	6083145 - 0B785148	7 US qt (6.6 L)
MCM 7.4L & 454 Mag	GM	454/7.4L	V-8	1988 - 1991	0B771113 - 0D603117	8 US qt (7.6 L)
MCM 7.4L/LX & 454 Mag, EFI & MPI	GM	454/7.4L	V-8	1992 - 2001	0D603118 - 0M024999	7 US qt (6.6 L)

Model	Make	CID/Litre	Cyl.	Year Range	Serial # Range	Approx. Oil Pan Capacity w/ New Filter(1)
MIE 330	GM	454/7.4L	V-8	1977 - 1980	4623115 - 5889913	7 US qt (6.6 L)
MIE 340/ 7.4L w/ Borg Warner trans.	GM	454/7.4L	V-8	1981 - 1992	5889914 - 0D715493	7 US qt (6.6 L)
MIE 7.4L w/Hurth trans.	GM	454/7.4L	V-8	1988 - 1992	0C391564 - 0D715493	8 US qt (7.6 L)
MIE 7.4L & 454 Mag MPI	GM	454/7.4L	V-8	1992 - 2001	0D715494 - 0L674613	7 US qt (6.6 L)
Ski 454 Mag EFI & MPI	GM	454/7.4L	V-8	1995 - 1997	0F215800 - 0K999999	7 US qt (6.6 L)
MCM 390	GM	482/7.9L	V-8	1969 - 1970	2781129 - 3042731	8 US qt (7.6 L)
MIE 390	GM	482/7.9L	V-8	1969 - 1970	2781129 - 2825059	7 US qt (6.6 L)
MCM 496 Mag & HO	GM	496/8.1L	V-8	2001 - 2016	0M025000 and up	9 US qt (8.5L)
MIE 8.1S Horizon & HO	GM	496/8.1L	V-8	2001 - 2016	0M026000 and up	9 US qt (8.5L)
MCM 502 Mag	GM	502/8.2L	V-8	1990 - 1992	0C878221 - 0D824588	8 US qt (7.6 L)
MCM 502 Mag, EFI & MPI	GM	502/8.2L	V-8	1992 - 2001	0D824589 - 0M024999	7 US qt (6.6 L)
MCM 8.2 Mag	GM	502/8.2L	V-8	2010 - 2016	1A350340 and up	7 US qt (6.6 L)
MIE 8.2L	GM	502/8.2L	V-8	1990 - 1996	0C878221 - 0F819619	8 US qt (7.6 L)
MIE 8.2L MPI	GM	502/8.2L	V-8	1996 - 2001	0F819620 - 0L674200	7 US qt (6.6 L)
MIE 8.2	GM	502/8.2L	V-8	2010 - 2016	1A350802 and up	7 US qt (6.6 L)

(1) Approximate, ALWAYS use dipstick to determine exact quantity of oil required

OIL CAPACITY CHART - HI-PERF GASOLINE ENGINE

The engine oil capacity is only an Approximate, ALWAYS use dipstick to determine exact quantity of oil required.

MerCruiser Hp Gas Engine Oil Capacity

Model	CID/Litre	Cyl.	Year Range	Serial # Range	Approx. Oil System Capacity w/ New Filter (1)
270	350/5.7L	V-8	1969 - 1972	2851074 - 3385720	7 US qt (6.6 L)
270 MIE	350/5.7L	V-8	1969 - 1972	2851074 - 3077735	6 US qt (5.7 L)
280 TRS	350/5.7L	V-8	1975 - 1976	4176250 - 4770199	6-1/2 US qt (6 L)
300 Tempest	350/5.7L	V-8	1985 - 1986	6668677 - 0B430367	6-1/2 US qt (6 L)
320 (EFI)	350/5.7L	V-8	1987 - 1989	0A543604 - 0C622418	6-1/2 US qt (6 L)
377 Scorpion (Sterndrive)	377/6.2L	V-8	2000 - 2016	0L416146 and up	5 US qt (4.7 L)
377 Scorpion Ski	377/6.2L	V-8	1997 - 1998	0K000656 - 0L600314	5 US qt (4.7 L)
370 TRS	454/7.4L	V-8	1978 - 1987	4179554 - 0B714586	6 US qt (5.7 L)
400 TRS (Cyclone)	454/7.4L	V-8	1980 - 1986	4179554 - 0B457644	7 US qt (6.6 L)
420	454/7.4L	V-8	1987 - 1989	0A398941 - 0B622418	6 US qt (5.7 L)
425	454/7.4L	V-8	1990 - 1992	0B622419 - 0D725499	8 US qt (7.6 L)
425 (Gen. V)	454/7.4L	V-8	1992 - 1993	0D725500 - 0D937011	8 US qt (7.6 L)
440 TRS (Cyclone)	454/7.4L	V-8	1983 - 1986	4179554 - 0B485220	7 US qt (6.6 L)
450 (Gen. V)	454/7.4L	V-8	1995 - 1996	0F347100 - 0F347277	8 US qt (7.6 L)
525 SC	454/7.4L	V-8	1991 - 1992	0D456000 - 0D725808	8 US qt (7.6 L)
525 SC (Gen. V)	454/7.4L	V-8	1992 - 1999	0D763746 - 0L415623	8 US qt (7.6 L)
460 TRS (Cyclone)	482/7.9L	V-8	1983 - 1986	4179554 - 6181046	10 US qt (9.4L)
465	502/8.2L	V-8	1990 - 1992	0C849992 - 0D725646	8 US qt (7.6 L)
465 (Gen. V)	502/8.2L	V-8	1992 - 1994	0D725647 - 0F213244	8 US qt (7.6 L)
500 (Gen. V)	502/8.2L	V-8	1994 - 1996	0F213293 - 0F745159	8 US qt (7.6 L)
500 (Gen VI)	502/8.2L	V-8	1997 - 1998	0F745195 - 0L001772	8 US qt (7.6 L)
500 (Gen +)	502/8.2L	V-8	1999	0L414639 - 0L601036	8 US qt (7.6 L)
500 EFI	502/8.2L	V-8	1999 - 2005	0L001477 and up	7 US qt (6.6 L)

MERCURY 4-STROKE MARINE ENGINE OIL AND OIL FILTERS

Model	CID/Litre	Cyl.	Year Range	Serial # Range	Approx. Oil System Capacity w/ New Filter (1)
575 SCi	502/8.2L	V-8	2001	0L306696 - 0L307026	8 US qt (7.6 L)
575 SCi	502/8.2L	V-8	2000	0L601000 - 0L602090	8 US qt (7.6 L)
575 SCi	502/8.2L	V-8	2001 - 2005	0M050000 - 0M950526	8 US qt (7.6 L)
600 SC	502/8.2L	V-8	1991 - 1992	0D456489 - 0D456768	8 US qt (7.6 L)
600 SC (Gen. V)	502/8.2L	V-8	1992 - 2000	0D725676 and up	8 US qt (7.6 L)
500 Bulldog	540/8.9L	V-8	1990 - 2001	0C577254 - 0M050281	12 US qt (11.3 L)
575	540/8.9L	V-8	1986 - 1992	0A677429 - 0D763716	7 US qt (6.6 L)
800 SC (Gen. V)	572/9.4L	V-8	1993 - 1998	0D763836 and up	9 US qt (8.5L)
900 SC	542/8.9L	V-8	1998 - 2000	0K999856 - 0L602069	11 US qt (10.5 L)
900 SC (Dry Sump)	542/8.9L	V-8	2001 - 2016	0L306805 and up	16 US qt (15.2 L)

(1) Approximate, ALWAYS use dipstick to determine exact quantity of oil required

OIL FILTERS FOR FOUR STROKE OUTBOARDS

FOURSTROKE OUTBOARD OIL FILTER



35-822626K03

Replaceable screw-on type canister filters.

Fits Mercury/Mariner 8/9.9 hp. FourStroke outboards (323cc) , 15/20 hp. FourStroke carbureted outboards, and the 25/30 hp. EFI FourStroke outboard (MY2006 & newer).

Mercury Branded, Box Point of Sale Packaged.

FOURSTROKE OUTBOARD OIL FILTER



35-8M0065104

Replaceable screw-on type canister filters.

Fits Mercury/Mariner 25 hp. FourStroke (Carb, MY2006 & prior), 30 hp. FourStroke (3 cyl., MY2005 & prior), all 40-60 hp. FourStroke outboards (MY 1998 & newer), all 75-115 hp. FourStroke outboards (USA 1B366822 & prior), and all 75-115 hp. FourStroke outboards (USA 2B094996 and above).

Mercury Branded, Box Point of Sale Packaged.

OIL DRIP TRAY



8M0052100

After the oil resevoir has been properly drained, this tray when in place will help to prevent oil from dripping into the lower cowl when removing the side mounted engine filters listed in the application.

Fits the F25/30hp. EFI FourStroke Outboards and the F40-60hp. FourStroke outboards.

FOURSTROKE OUTBOARD OIL FILTER



35-877761K01

Replaceable screw-on type canister filter.

Fits the 75/90/115 hp. FourStroke outboard (USA 1B366823-2B094995 1731 cc.) and the new 150 hp. EFI FourStroke outboard.

Mercury Branded, Box Point of Sale Packaged.

FOURSTROKE OUTBOARD OIL FILTER



35-877767K01

Replaceable screw-on type canister filter.
Fits the 135/150/175/200 hp. Verado In-line 4 cylinder outboard.
Mercury Branded, Box Point of Sale Packaged.

FOURSTROKE OUTBOARD OIL FILTER



35-877769K01

Replaceable screw-on type canister filter.
Fits the 200/225/250/275/300/350/400R hp. Verado In-line 6 cylinder outboard.
Mercury Branded, Box Point of Sale Packaged.

FOURSTROKE OUTBOARD OIL FILTER



35-822626T 7

Replaceable screw-on type canister filters. Requires filter wrench 91-888734.
Fits Mercury/Mariner 225 hp. (V-6) FourStroke outboard.

OIL DRAIN FUNNEL KIT



91-892866A01

Helps to direct draining crankcase oil past the cavitation plate.
Fits the XL version of the L6 Verado outboard.

OIL FILTER WRENCH



91-802653K02

This is a formed metal tool for strength and durability.
Fits replaceable screw-on type canister oil filters wherever found on current Mercury/Mariner FourStroke outboards 9.9 thru 60 hp., and also the 75-115 hp. s/n 1B366822 & below.
Priced individually, sold @ multiples of 2
Mercury Branded, Clamshell Package Point of Sale Packaged.

OIL FILTER WRENCH



91-889277K01

Metal wrench, requires a 3/8 in. drive ratchet.
Fits the (877761__) oil filter found on the 75-115 EFI FourStroke outboard (serial number 1B366823-2B094955) and the 150 hp. EFI FourStroke outboard.
Mercury Branded, Clamshell Package Point of Sale Packaged.

OIL FILTER WRENCH



91-889277K03

Metal wrench, requires a 3/8 in. drive ratchet.
Fits the 896546_ series & 883701_ series oil filter found on the early Verado 135-275 hp. FourStroke outboards.
Mercury Branded, Clamshell Package Point of Sale Packaged.

MERCURY 4-STROKE MARINE ENGINE OIL AND OIL FILTERS

OIL FILTER WRENCH



91-889277002

Made of metal. Requires a 3/8" drive.

Fits the Mercury 35-822626T 7 screw-on type canister oil filter found on the V-225 hp. FourStroke outboard.

OIL FILTER WRENCH



91-889277

Made of metal. Requires a 3/8" drive.

Fits the Quicksilver 35-822626Q15 screw-on type canister oil filter found on the V-225 hp. FourStroke outboard and the new 877767__ & 877769__ series filters for the 135-300 Verado.

MERCRUISER OIL FILTERS- GASOLINE

This engineered marine filter provides outstanding durability through a more robust design, heavier gauge materials and a superior paint process inside and out. Designed for a marine environment, this filter provides benefits not found in a standard automotive filter.

OIL FILTER



35-883702K

w/o remote oil

Fits MCM V-6 models that have the oil filter mounted on the engine block. Not for use with V-6 engines that have a remote oil filter.

Mercury Branded, Box Point of Sale Packaged.

OIL FILTER



35-866340K01

Fits all MCM/MIE GM engines, except V-6 models that have the oil filter mounted on the engine block. Also fits the 4.5L and 6.2L Mercury engine.

Mercury Branded, Box Point of Sale Packaged.

OIL FILTER



35-858004K

High efficiency, High performance synthetic media removes over 97% of oil contaminants versus 78% for conventional paper element filters.

Fits all MCM/MIE GM engines, except V-6 models that have the oil filter mounted on the engine block.

Mercury Branded, Box Point of Sale Packaged.

OIL FILTER



35-802886T

Fits all MCM/MIE Ford engines

Mercury Branded, Box Point of Sale Packaged.

OIL FILTER



35-881126K01

10 micro, synthetic media

Fits 2007 and newer MCM Hi-Performance GM V-8 engines, except the following SCi engines: 600, 662, & 700 (s/n 0M953905-0M962240) and all 850, 1075 & 1200

Mercury Branded, Box Point of Sale Packaged.

OIL FILTER



35-840634K01

Fits MCM Racing SCi engines.
600, 662, & 700 (s/n 0M953905-0M962240) and all 850, 1075 & 1200
Mercury Branded

TRANSMISSION OIL FILTER



35-879312T25

Fits Scorpion 350 EC w/ ZF 45C transmission
Mercury Branded

AXIUS HYDRAULIC OIL FILTER



35-881132T

Axius Power Steering Oil Filter
Fits MCM engines w/ Axius steering
Mercury Branded

MERCURY DIESEL STERNDRIVE/INBOARD OIL AND OIL FILTERS

SKU CHART

Mercury Diesel Engine Oil SKU Chart

Item Number	Qty per Case	Container Size	Pallet Qty	Btl Length (in)	Btl Depth (in)	Btl Height (in)	Btl Weight (lb)	Case Length (in)	Case Width (in)	Case Height (in)	Case Weight (lb)	Pallet Weight (lb)
SAE 15W40 DIESEL FOR STERNDRIVES/INBOARDS												
92-858042K01	3	4 LITRE	180	7.5	5.1	11.8	8.167	15.875	8	12.875	24.5	1520
92-858043Q01	1	208 LITRE	4	23	23	34	434	23	23	34	434	1786

SAE 15W40 DIESEL ENGINE OIL

Protects better than standard fleet oils. Use of this oil will:
- Provide outstanding wear and corrosion protection which help extend engine life
- Control soot, deposits and oil thickening
- Prevent sludge and varnish deposits

Meets or exceeds API CH-4/CF-4/SJ

Meets or exceeds OEM approvals for:
- Mercury® non-TDI diesel applications
- Volvo® VDS®
- Caterpillar® CD/TO-2
- Cummins®
- Detroit Diesel®
- And other diesel engines

15W40 DIESEL ENGINE OIL



92-858042K01
Priced individually, sold @ multiples of 3
4 L (1.06 US gal) plastic bottle
Mercury Branded

15W40 DIESEL ENGINE OIL



92-858043Q01
208 L (55 US gal) drum
Quicksilver Branded

OIL CAPACITY CHART - DIESEL ENGINE

The engine oil capacity is only an Approximate, ALWAYS use dipstick to determine exact quantity of oil required.

MerCruiser Diesel Engine Oil Capacity

Model	CID/Litre	Cyl.	Year Range	Serial # Range	Approx. Oil Pan Capacity w/ New Filter
D1.7L DTI (Alpha)	103/1.7L	I/L 4	2001 - 2016	0M055000 and up	4.75 US qt (4.5 L)
SDI 40/50/60	116/1.9L	I/L 4	2003 - 2012	All - All	4.75 US qt (4.5 L)
TDI 45/75	116/1.9L	I/L 4	2003 - 2012	All - All	4.75 US qt (4.5 L)
QSD 2.0L 115/130/150/170	2.0L	I/L4	All	All - All	5.5 US qt (5.2L)
SDI 55/75	153/2.5L	I/L 5	2002 - 2016	All - All	6.34 US qt (6 L)

Model	CID/Litre	Cyl.	Year Range	Serial # Range	Approx. Oil Pan Capacity w/ New Filter
TDI 100/120/140/150/165	153/2.5L	I/L 5	2002 - 2016	All - All	6.34 US qt (6 L)
D2.8L D-Tronic (Bravo & MIE)	169/2.8L	I/L 4	1997 - 2016	0K144109 and up	8.45 US qt (8 L)
TDI 100/225/230/260/265	181/3.0L	V-6	2006 - 2016	All - All	8.45 US qt (8 L)
D183 Turbo AC (Bravo & MIE)	183/3.0L	I/L 5	1990 - 1993	0B993002 - 0D725151	9.5 US qt (9 L)
530 D-TA (Bravo & MIE)	183/3.0L	I/L 5	1989 - 1993	0B993002 - 0D725151	9.5 US qt (9 L)
D3.0L (Bravo & MIE)	183/3.0L	I/L 5	1994 - 1997	0D725152 and up	9.5 US qt (9 L)
D219 Turbo AC (Bravo & MIE)	219/3.6L	I/L 6	1990 - 1993	0B993002 - 0D850127	10.56 US qt (10 L)
636 D-TA (Bravo & MIE)	219/3.6L	I/L 6	1989 - 1993	0B993002 - 0D850127	10.56 US qt (10 L)
D3.6L (Bravo & MIE)	219/3.6L	I/L 6	1994 - 1997	0D850128 and up	10.56 US qt (10 L)
D3.6L W (Bravo)(MCM)(Intl.)	219/3.6L	I/L 6	1997	0K000001 and up	10.56 US qt (10 L)
TDI 335/350/370	254/4.2L	V-8	2009 - 2016	All - All	10 US qt (9.5 L)
D254 Turbo AC (Bravo & MIE)	254/4.2L	I/L 6	1990 - 1993	0C849461 - 0D554731	12.68 US qt (12 L)
D4.2L (Bravo & MIE)	254/4.2L	I/L 6	1994 - 1997	0D554732 and up	12.68 US qt (12 L)
D4.2L D-Tronic (Bravo & MIE)	254/4.2L	I/L 6	1997 - 2016	0K144114 and up	12.68 US qt (12 L)
D4.2L LD	254/4.2L	I/L6	1999 - 2016	0L344381 and up	12.68 US qt (12 L)
7.3L (Bravo & MIE)	444/7.3L	V-8	1994 - 1996	0F060000 and up	12 US qt (11.3 L)
D7.3L D-Tronic	444/7.3L	V-8	1996 - 2001	0K095775 and up	16-1/2 US qt (15.6 L)

(1) Approximate, ALWAYS use dipstick to determine exact quantity of oil required

OIL FILTERS FOR MERCRUISER DIESEL ENGINES

OIL FILTER ELEMENT



882687

Fits 1.7L MS 120 diesel.

OIL FILTER



35-895207

3.25 in. (83 mm) diameter

Fits CMD diesel engines D2.8L (170 & 200) (s/n 88010001 and up). Also fits QSD 2.0 (early version), 2.8 & 4.2 engines

OIL FILTER



35-879312041

2.625 in. (67 mm) diameter

Fits 2008 & newer QSD 2.0 engines.
MCM ES 130 (s/n 88206399 and up)
MCM ES 150 (s/n 88221799 and up)
MCM ES 170 (s/n 88231000 and up)
MIE EI 115 (s/n 88200499 and up)
MIE EI 130 (s/n 88205099 and up)
MIE EI 150 (s/n 88220299 and up)
MIE EI 170 (s/n 88230000 and up)

OIL FILTER



35- 19485

Fits diesel engines D2.8L E models (s/n 88010000 and below), D3.0L (s/n 0D725460 and up), D3.6L (s/n 0F306930 and up), D4.2L (s/n 0F450250 and up), D4.2L E models, D183, D219, 530D-TA & 636D-TA.

OIL FILTER



35-816168

Fits diesel engines D3.0L (s/n 0D725152-0D725459), D3.6L (s/n 0D850128-0F306929) & D4.2L (s/n 0D554732-0F450249).

OIL FILTER



35-8M0066483

Element

Fits 3.0L V6 & 4.2L V8 TDI diesel engine

OIL FILTER



35-805809T

5.5 in. (139.7 mm) length

Fits D7.3L diesel engines

OIL FILTER



35-862889

7.5 in (190.5 mm) long

Fits MCM D7.3L D-tronic diesel engines (s/n 0L050050-0L391832)

MERCURY HI-PERF ENGINE OIL AND EXTREME PERFORMANCE GEAR OIL

MERCURY HIGH PERFORMANCE 2-STROKE OIL

High performance oil is essential for high performance engines.

Mercury Racing two-stroke oil not only cleans up what other oils have left behind--it maximizes engine horsepower while protecting it against heat, wear and additional carbon build-up.

Low smoke, ashless formula

Meets or exceeds manufacturers' warranty requirements. Using this oil will not void manufacturer warranties.

Exceeds TCW3, JASO FD and ISO EGD

Recommended for use in two-stroke racing applications including: marine, motorcycle and snowmobile engines

Recommended for use in air- or liquid-cooled engines. Can be used in oil-injected or premix applications

HIGH PERFORMANCE TWO-STROKE OIL



92-8M0078011

Priced individually, sold @ multiples of 3

3.78 liters (1 gallon) bottle
Mercury Branded

HIGH PERFORMANCE 2-STROKE OIL



92-8M0078012

208 liters (55 gallons) drum
Mercury Branded

MERCURY HIGH PERFORMANCE 4-STROKE OIL

Maximum protection is essential when pushing your engine to the limit. Racing, tow sports and fishing applications require your engine to operate under extreme conditions. Operating at high engine output and high temperatures or alternating between periods of high RPMs and throttling down to low RPMs or idle puts serious pressure on engine oil. Mercury Racing Four Stroke oil will not break down under these conditions. It maintains its viscosity, protects against varnish buildup and sludge formation and exceeds the rust protection requirements for NMMA® certification.

Recommended for use in all Mercury Racing four-stroke engines including: FormulaRace and Verado outboards and 525 EFI through 1650 sterndrives

Meets or exceeds manufacturers' warranty requirements for use of an FC-W® marine engine oil

25W50 SYNTHETIC BLEND HIGH PERFORMANCE OIL



92-8M0078014

Priced individually, sold @ multiples of 3

3.78 liters (1 gallon) bottle
Mercury Branded

25W50 SYNTHETIC BLEND HIGH PERFORMANCE OIL



92-8M0078013

Priced individually, sold @ multiples of 6

946 ml (1 quart) bottle
Mercury Branded

MERCURY HI-PERF ENGINE OIL AND EXTREME PERFORMANCE GEAR OIL

25W50 SYNTHETIC BLEND HIGH PERFORMANCE OIL



92-8M0078491

208 Liters (55 gallons) drum
Quicksilver Branded

OIL CAPACITY CHART - HI-PERF GASOLINE ENGINE

The engine oil capacity is only an Approximate, ALWAYS use dipstick to determine exact quantity of oil required.

MerCruiser Hp Gas Engine Oil Capacity

Model	CID/Litre	Cyl.	Year Range	Serial # Range	Approx. Oil System Capacity w/ New Filter (1)
270	350/5.7L	V-8	1969 - 1972	2851074 - 3385720	7 US qt (6.6 L)
270 MIE	350/5.7L	V-8	1969 - 1972	2851074 - 3077735	6 US qt (5.7 L)
280 TRS	350/5.7L	V-8	1975 - 1976	4176250 - 4770199	6-1/2 US qt (6 L)
300 Tempest	350/5.7L	V-8	1985 - 1986	6668677 - 0B430367	6-1/2 US qt (6 L)
320 (EFI)	350/5.7L	V-8	1987 - 1989	0A543604 - 0C622418	6-1/2 US qt (6 L)
377 Scorpion (Sterndrive)	377/6.2L	V-8	2000 - 2016	0L416146 and up	5 US qt (4.7 L)
377 Scorpion Ski	377/6.2L	V-8	1997 - 1998	0K000656 - 0L600314	5 US qt (4.7 L)
370 TRS	454/7.4L	V-8	1978 - 1987	4179554 - 0B714586	6 US qt (5.7 L)
400 TRS (Cyclone)	454/7.4L	V-8	1980 - 1986	4179554 - 0B457644	7 US qt (6.6 L)
420	454/7.4L	V-8	1987 - 1989	0A398941 - 0B622418	6 US qt (5.7 L)
425	454/7.4L	V-8	1990 - 1992	0B622419 - 0D725499	8 US qt (7.6 L)
425 (Gen. V)	454/7.4L	V-8	1992 - 1993	0D725500 - 0D937011	8 US qt (7.6 L)
440 TRS (Cyclone)	454/7.4L	V-8	1983 - 1986	4179554 - 0B485220	7 US qt (6.6 L)
450 (Gen. V)	454/7.4L	V-8	1995 - 1996	0F347100 - 0F347277	8 US qt (7.6 L)
525 SC	454/7.4L	V-8	1991 - 1992	0D456000 - 0D725808	8 US qt (7.6 L)
525 SC (Gen. V)	454/7.4L	V-8	1992 - 1999	0D763746 - 0L415623	8 US qt (7.6 L)
460 TRS (Cyclone)	482/7.9L	V-8	1983 - 1986	4179554 - 6181046	10 US qt (9.4L)
465	502/8.2L	V-8	1990 - 1992	0C849992 - 0D725646	8 US qt (7.6 L)
465 (Gen. V)	502/8.2L	V-8	1992 - 1994	0D725647 - 0F213244	8 US qt (7.6 L)
500 (Gen. V)	502/8.2L	V-8	1994 - 1996	0F213293 - 0F745159	8 US qt (7.6 L)
500 (Gen VI)	502/8.2L	V-8	1997 - 1998	0F745195 - 0L001772	8 US qt (7.6 L)
500 (Gen +)	502/8.2L	V-8	1999	0L414639 - 0L601036	8 US qt (7.6 L)
500 EFI	502/8.2L	V-8	1999 - 2005	0L001477 and up	7 US qt (6.6 L)
575 SCi	502/8.2L	V-8	2001	0L306696 - 0L307026	8 US qt (7.6 L)
575 SCi	502/8.2L	V-8	2000	0L601000 - 0L602090	8 US qt (7.6 L)
575 SCi	502/8.2L	V-8	2001 - 2005	0M050000 - 0M950526	8 US qt (7.6 L)
600 SC	502/8.2L	V-8	1991 - 1992	0D456489 - 0D456768	8 US qt (7.6 L)
600 SC (Gen. V)	502/8.2L	V-8	1992 - 2000	0D725676 and up	8 US qt (7.6 L)
500 Bulldog	540/8.9L	V-8	1990 - 2001	0C577254 - 0M050281	12 US qt (11.3 L)
575	540/8.9L	V-8	1986 - 1992	0A677429 - 0D763716	7 US qt (6.6 L)

MERCURY HI-PERF ENGINE OIL AND EXTREME PERFORMANCE GEAR OIL

Model	CID/Litre	Cyl.	Year Range	Serial # Range	Approx. Oil System Capacity w/ New Filter (1)
800 SC (Gen. V)	572/9.4L	V-8	1993 - 1998	0D763836 and up	9 US qt (8.5L)
900 SC	542/8.9L	V-8	1998 - 2000	0K999856 - 0L602069	11 US qt (10.5 L)
900 SC (Dry Sump)	542/8.9L	V-8	2001 - 2016	0L306805 and up	16 US qt (15.2 L)

(1) Approximate, ALWAYS use dipstick to determine exact quantity of oil required

MERCURY EXTREME PERFORMANCE GEAR LUBE

Mercury Racing Gear Lube was designed for outboard and sterndrive racing applications. This gear lube provides maximum protection against:
• Water intrusion – advanced emulsifiers protect gears if water enters the gear housing
• Wear – tackifiers and pressure additives improve oil film adhesion and protect against excessive wear
• Horsepower loss - prevents horsepower loss and won't break down when gears reach high temperatures

Recommended for use in Mercury Racing outboard gear cases including: Sport Master, Torque Master, Fleet Master, VI SSM and IV SSM and Mercury Racing sterndrive applications including Dry Sump Six,NXT6, SSM, NXT, Bravo XR, Bravo XR Sport Master drives and NXT transmission assemblies.

SAE 85W90 EXTREME PERFORMANCE GEAR OIL



92-8M0078015
Priced individually, sold @ multiples of 6
33.8 fl oz (1 quart) bottle
Mercury Branded

SAE 85W90 EXTREME PERFORMANCE GEAR OIL



92-8M0078016
19 liters (5 gallons) bottle
Mercury Branded

SAE 85W90 EXTREME PERFORMANCE GEAR OIL



92-8M0090838
208 L (55 US gal) drum
Quicksilver Branded

MERCURY CORROSION PROTECTION

CORROSION GUARD



92-802878 55

Corrosion Guard is a rust inhibitor that forms a water resistant barrier on non-painted and painted surfaces.

Use to prevent rust from forming on out drives, lower units and power trim motors and components or other metal surfaces. Can also be used to prevent further paint damage in areas where undercutting and blistering have occurred. Do not spray on surfaces coated with antifouling or biocide paint. Do no spray on drive belts.

Priced individually, sold @ multiples of 6

312 g (11 oz) spray can

Mercury Branded

STORAGE SEAL FOGGING OIL



92-858081K03

Mercury Storage Seal forms a protective barrier that prevents rust on internal metal surfaces. It also keeps cylinders lubricated to prevent cylinder or piston damage when starting your engine after storage.

Use in all 2- and 4-cycle carbureted and fuel-injected gasoline engines including cars, trucks, motorcycles, ATVs, snowmobiles, marine engines, lawn mowers, chain saws, string trimmers and snow blowers.
Safe for catalyzed engines.

Priced individually, sold @ multiples of 12

340 g (12 oz) spray can

Mercury Branded

MERCURY ENGINE COOLANT AND WATER SYSTEM ANTIFREEZE

MERCURY EXTENDED LIFE COOLANT/ANTIFREEZE



92-877770K 1

Provides extended life protection for closed cooling systems. This 5 year, 1000 hour protection is ethylene glycol based and pre-diluted 50/50 with de-ionized water. It is silicate and phosphate free and will not cause gelling. Provides freeze protection down to -34 deg. F and boiling protection to 265 deg. F. It is also compatible with conventional anti-freeze, but dilution will reduce extended life benefits.

Meets ASTM D-3306, ATSM D-4340

For use in all MCM/MIE gasoline engines with closed cooling systems.
Also recommended for the following applications:
• ANFOR R 15-601
• BS 6580 (British standard)
• Chrysler MS7170
• Chrysler MS9769
• Ford ESE-M97B44-A
• Ford WSS-M97B44-D
• Ford WSS-M97B51-A1
• FVV HEFT R443 (Germany)
• GM 1825M
• GM 6277M (DEX-COOL® specification)
• JASO M325 (Japan)
• JIS K 2234 (Japan)
• SAE J1034
• Mercedes Benz DBL 7700

Priced individually, sold @ multiples of 4

3.78 L (1 US gal) plastic bottle

Mercury Branded

-50ºF (-46ºC) WATER SYSTEM ANTI-FREEZE



92-8M0073201

Mercury -50º water system anti-freeze provides the ultimate in cold weather and corrosion protection. It prevents marine engine cooling systems and boat, RV and home plumbing systems from bursting in cold weather. Its premium additive package prevents corrosion of aluminum, copper, brass and solder, and will not harm rubber seals, or hose materials. The 3X-died bright pink color provides excellent blow-through visibility. Formulated with non-toxic, virgin propylene glycol (30% blend).
• Glycerin-free formula
• Provides burst protection to -50ºF (-46ºC)
• Provides freeze protection within a range of 12ºF to 16ºF (-11ºC to -8ºC)
• This product is ready-to-use; DO NOT DILUTE

Priced individually, sold @ multiples of 6

3.78 L (1 US gal) plastic bottle

Mercury Branded

-50ºF (-46ºC) WATER SYSTEM ANTI-FREEZE



92-8M0073202

Mercury -50º water system anti-freeze provides the ultimate in cold weather and corrosion protection. It prevents marine engine cooling systems and boat, RV and home plumbing systems from bursting in cold weather. Its premium additive package prevents corrosion of aluminum, copper, brass and solder, and will not harm rubber seals, or hose materials. The 3X-died bright pink color provides excellent blow-through visibility. Formulated with non-toxic, virgin propylene glycol (30% blend).
• Glycerin-free formula
• Provides burst protection to -50ºF (-46ºC)
• Provides freeze protection within a range of 12ºF to 16ºF (-11ºC to -8ºC)
• This product is ready-to-use; DO NOT DILUTE

208 L (55 US gal) drum

Mercury Branded

-100ºF (-73ºC) WATER SYSTEM ANTI-FREEZE



92-8M0073203

Mercury -100º water system anti-freeze provides the ultimate in cold weather and corrosion protection. It prevents marine engine cooling systems and boat, RV and home plumbing systems from bursting in cold weather. Its premium additive package prevents corrosion of aluminum, copper, brass and solder, and will not harm rubber seals, or hose materials. The 3X-died blue-green color provides excellent blow-through visibility. Formulated with non-toxic, virgin propylene glycol (30% blend).
• Glycerin-free formula
• Provides burst protection to -100ºF (-73ºC)
• Provides freeze protection within a range of -58ºF to -63ºF (-50ºC to -52ºC)
• This product is ready-to-use or may be diluted - follow label instructions for dilution ratios

Priced individually, sold @ multiples of 6

3.78 l (1 US gal.) plastic bottle

Mercury Branded

-100ºF (-73ºC) WATER SYSTEM ANTI-FREEZE



92-8M0073204

Mercury -100º water system anti-freeze provides the ultimate in cold weather and corrosion protection. It prevents marine engine cooling systems and boat, RV and home plumbing systems from bursting in cold weather. Its premium additive package prevents corrosion of aluminum, copper, brass and solder, and will not harm rubber seals, or hose materials. The 3X-died blue-green color provides excellent blow-through visibility. Formulated with non-toxic, virgin propylene glycol (30% blend).

- Glycerin-free formula
- Provides burst protection to -100ºF (-73ºC)
- Provides freeze protection within a range of -58ºF to -63ºF (-50ºC to -52ºC)
- This product is ready-to-use or may be diluted - follow label instructions for dilution ratios

208 L (55 US gal.) drum

Mercury Branded

-200ºF (-129ºC) WATER SYSTEM ANTI-FREEZE



92-8M0073205

Mercury -200º water system anti-freeze provides the ultimate in cold weather and corrosion protection. It prevents marine engine cooling systems and boat, RV and home plumbing systems from bursting in cold weather. Its premium additive package prevents corrosion of aluminum, copper, brass and solder, and will not harm rubber seals, or hose materials. The 3X-died green color provides excellent blow-through visibility. Formulated with non-toxic, virgin propylene glycol (96% blend).

- Glycerin-free formula
- Provides burst protection to -200ºF (-129ºC)
- Provides freeze protection within a range of -98ºF to -103ºF (-72ºC to -75ºC)
- This product is ready-to-use or may be diluted

208 L (55 US gal.) drum

Mercury Branded

MERCURY FUEL SYSTEM CARE AND MAINTENANCE

FUEL TREATMENT

Quickare is a fuel treatment that can be used at every fill-up to:
• Maximize engine performance with all grades of gasoline
• Help control corrosion, gum and varnish build-up and phase separation associated with ethanol-blended fuel
• Help control moisture and corrosion problems associated with non-ethanol-blended fuel
• Clean up existing varnish and gum deposits from fuel lines, tanks, carburetors and injectors, intake valves and spark plugs
• Keep fuel fresh between fill-ups - up to 3 months

1 ounce treats 10 gallons

Use in all 2- and 4-cycle carbureted and fuel-injected gasoline engines including cars, trucks, motorcycles, ATVs, snowmobiles, marine engines, lawn mowers, chain saws, string trimmers and snow blowers. Safe for catalyzed engines.

QUICKARE FUEL TREATMENT



92-8M0047930
Priced individually, sold @ multiples of 12

355 mL (12 oz) plastic bottle
Mercury Branded

QUICKARE FUEL TREATMENT



92-8M0058690
1 ounce treats 10 gallons of fuel
32 ounce bottle treats 320 gallons of fuel
Priced individually, sold @ multiples of 6

946 mL (32 oz) plastic bottle
Mercury Branded

ENGINE AND FUEL SYSTEM CLEANER

Quickleen should be used throughout the boating season to:
• Quickly and thoroughly remove carbon deposits from carburetors and injectors, intake valves, spark plugs, piston crowns and cylinder heads
• Prevent engine knocking and piston seize-up
• Extend spark plug life

1 ounce treats 5 gallons

Note: This product does not contain fuel stabilizers. use Quickare to prevent fuel breakdown and oxidation.

Use in all 2- and 4-cycle carbureted and fuel-injected gasoline engines including cars, trucks, motorcycles, ATVs, snowmobiles, marine engines, lawn mowers, chain saws, string trimmers and snow blowers. Safe for catalyzed engines.

QUICKLEEN ENGINE AND FUEL SYSTEM CLEANER



92-8M0047931
Priced individually, sold @ multiples of 12

355 mL (12 oz.) plastic bottle
Mercury Branded

QUICKLEEN ENGINE AND FUEL SYSTEM CLEANER



92-8M0058691
1 ounce treats 5 gallons of fuel
32 ounce bottle treats 160 gallons of fuel
Priced individually, sold @ multiples of 6

946 mL (32 oz) plastic bottle
Mercury Branded

POWER TUNE INTERNAL ENGINE CLEANER



92-858080K03

Mercury Power Tune© is recommended to assist in restoring lost power due to carbon, gum and varnish deposits that accumulate in the combustion chambers of gasoline engines. These deposits are the result of normal engine use, low temperature operation and the use of some fuels. Removing these deposits helps improve fuel/air flow and overall engine performance.

Use in all 2- and 4-cycle carbureted and fuel-injected gasoline engines including cars, trucks, motorcycles, ATVs, snowmobiles, marine engines, lawn mowers, chain saws, string trimmers and snow blowers.
Safe for catalyzed engines.

Priced individually, sold @ multiples of 12

340 g (12 oz) spray can

Mercury Branded

FUEL STABILIZER

Add Quickstor Fuel System Treatment & Stabilizer to fuel before long-term boat storage to:
• Prevent regular and ethanol-blended fuel from breaking down and oxidizing
• Stabilize fuel for up to a year
• Prevent fuel system corrosion
• Prevent gum and varnish from forming in the fuel and settling in fuel lines and tanks, carburetors and injectors
• Keep injectors and carburetors lubricated

1 ounce treats 5 gallons - 12 ounce bottle treats 60 gallons

Use in all 2- and 4-cycle carbureted and fuel-injected gasoline engines including cars, trucks, motorcycles, ATVs, snowmobiles, marine engines, lawn mowers, chain saws, string trimmers and snow blowers.
Safe for catalyzed engines.

QUICKSTOR FUEL STABILIZER



92-8M0047932

Priced individually, sold @ multiples of 12

355 mL (12 oz.) plastic bottle

Mercury Branded

QUICKSTOR FUEL STABILIZER



92-8M0058692

1 ounce treats 5 gallons of fuel
32 ounce bottle treats 160 gallons of fuel

Priced individually, sold @ multiples of 6

946 mL (32 oz) plastic bottle

Mercury Branded

QUICKSTOR FUEL STABILIZER



92-8M0058693

1 ounce treats 5 gallons of fuel
128 ounces (1 gallon) treats 640 gallons of fuel

Priced individually, sold @ multiples of 4

3.78 L (1 gallon) plastic bottle

Mercury Branded

WATER ELIMINATOR



67-808887Q

Contains a drying agent commonly used to keep small, sealed containers dry. It absorbs water that has collected in the fuel tank.
How to use: Attach to the inside fuel cap with the lanyard (included). Adjust the lanyard so the Water Eliminator sits at the bottom of the fuel tank. Replace as needed.
For use in all octane grades of gasoline, including ethanol blended. Not recommended for diesel fuel.

For use in all 2-cycle and 4-cycle gasoline outboard, sterndrive, inboard and jet drive marine engines.

Priced individually, sold @ multiples of 6

Quicksilver Branded, Point of Sale Packaged.

ALCOHOL TESTER



91-879172T28

Test Tube used to find the ethanol/alcohol percentage in gasoline.

Directions:
Step 1: Add water to the water line.
Step 2: Add gasoline to the gasoline line.
Step 3: Replace cap and shake vigorously
Step 4: Stand vial vertically with cap upright for 10 minutes.
Step 5: Locate the gasoline/water separation line and read scale. The separation line will indicate the percentage of alcohol, if present.

MERCURY GEARCASE LUBRICANT

MERCURY GEARCASE LUBRICANT

Mercury outperforms automotive gear oil in marine applications because of its specialized additive package designed for marine gear cases. Continued use of this gear case lubricant will:
• Provide maximum protection against excessive wear—even in the presence of water
• Prevent corrosion and pitting
• Help extend gear life

SKU CHART

Mercury Gearcase Lubricant SKU Chart

Item Number	Qty per Case	Container Size	Pallet Qty	Btl Length (in)	Btl Depth (in)	Btl Height (in)	Btl Weight (lb)	Case Length (in)	Case Width (in)	Case Height (in)	Case Weight (lb)	Pallet Weight (lb)
SAE 80W90 PREMIUM GEAR LUBE FOR OUTBOARDS & JET PUMPS BELOW 75HP												
92-802844K01	12	8 OZ TUBE										
92-858058K01	6	QUART	468	4.2	2.375	9.25	2.083	8.9	7.7	10.1	12.5	1040
92-858059K01	2	2.5 GAL.	72	9.1	6.8	14.5	20	9.78	14.5	14.5	40	1490
92-858007K01	1	5 GAL.	36	12	12	14.75	39	12	12	14.75	39	1454
92-858061Q01	1	16 GAL.	9	14.25	14.25	27	136	14.25	14.25	27	136	1274
92-858062Q01	1	55 GAL.	4	23	23	34	434	23	23	34	434	1786
SAE 90 HIGH PERFORMANCE GEAR LUBE FOR OUTBOARDS, JET PUMPS & SPORT JETS ABOVE 75HP AND ALL STERNDRIVES												
92-802851K01	12	8 OZ TUBE										
92-858064K01	6	QUART	468	4.2	2.375	9.25	2.083	8.9	7.7	10.1	12.5	1040
92-858065K01	2	2.5 GAL.	72	9.1	6.8	14.5	20	9.78	14.5	14.5	40	1490
92-858008K01	1	5 GAL.	36	12	12	14.75	39	12	12	14.75	39	1454
92-858067Q01	1	16 GAL.	9	14.25	14.25	27	136	14.25	14.25	27	136	1274
92-858068Q01	1	55 GAL.	4	23	23	34	434	23	23	34	434	1786

PREMIUM GEAR LUBE - SAE 80W90

Mercury Premium Gear Lube is recommended in lower units for outboards below 75HP.

SAE 80W90 GEAR LUBE



92-802844K01
Priced individually, sold @ multiples of 12
237 ml (8 fl oz) tube
Mercury Branded

SAE 80W90 GEAR LUBE



92-858058K01
Priced individually, sold @ multiples of 6
946 ml (32 fl oz) plastic bottle
Mercury Branded

SAE 80W90 GEAR LUBE



92-858059K01

Priced individually, sold @ multiples of 2
9.46 L (2.5 US gal) plastic bottle
Mercury Branded

SAE 80W90 GEAR LUBE



92-858007K01

18.9L (5 US Gal) plastic pail
Mercury Branded

SAE 80W90 GEAR LUBE



92-858061Q01

60.5 L (16 US gal) drum
Quicksilver Branded

SAE 80W90 GEAR LUBE



92-858062Q01

208 L (55 US gal) drum
Quicksilver Branded

PREMIUM GEAR LUBE CAPACITY CHART

This gearlube capacity chart is limited to recent models and has been developed to aid in determining how much gearlube to have on hand when servicing a particular gearhousing. Changing and servicing of gearlube should always be performed in accordance with techniques and procedures as outlined in the appropriate service or owner manuals. The quantities shown here are to be regarded as reference only. Any variation from the quantities shown may indicate an incorrect model selection, the wrong service technique or a more serious problem. Contact your local dealer prior to running if this should occur.

For outboards less than 75 hp

Mercury or Quicksilver SAE 80W90 Premium Gear Lube is recommended

Brand	Model	Cycle	Model Description	Oz.	mL.
Mercury/Mariner	2.2, 2.5, 3.3	2 cycle		4.5	135
Mercury/Mariner	4, 5	2 cycle		6.8	200
Mercury/Mariner	6, 8, 9.9, 15	2 cycle		6.8	200
Mercury/Mariner	20, 25	2 cycle		8.8	260
Mercury/Mariner	30, 40	2 cycle	2 cylinder	14.9	440
Mercury/Mariner	40, 50	2 cycle	3 cylinder, std. Gearcase	14.9	440
Mercury/Mariner	60	2 cycle	Big Foot	22.5	665
Force	5	2 cycle		4.0	120
Force	9.9, 15	2 cycle		6.8	200
Force	25	2 cycle		8.8	260
Force	40, 50	2 cycle		14.9	440
Mercury/Mariner	2.5, 3.5	FourStroke		6.1	180
Mercury/Mariner	4, 5	FourStroke		6.8	200
Mercury/Mariner	8/9.9	FourStroke	MY 2004 & prior Standard gearcase	6.8	200
Mercury/Mariner	8/9.9	FourStroke	MY 2005 & newer Standard gearcase	10.8	320
Mercury/Mariner	9.9	FourStroke	MY 2004 & prior BigFoot	8.8	260
Mercury/Mariner	9.9	FourStroke	MY 2005 & newer BigFoot	12.5	370
Mercury/Mariner	15 (323cc)	FourStroke	Standard Gearcase	6.8	200
Mercury/Mariner	15 (323cc)	FourStroke	Big Foot	8.8	260
Mercury/Mariner	15 (351cc)	FourStroke		12.5	370
Mercury/Mariner	20 (351cc)	FourStroke		12.5	370
Mercury/Mariner	25	FourStroke	Big Foot, Carb	14.9	440
Mercury/Mariner	25	FourStroke	EFI	11.8	350
Mercury/Mariner	30	FourStroke	MY 2005 & prior Standard gearcase	14.9	440
Mercury/Mariner	30	FourStroke	MY 2006 & newer EFI	11.8	350
Mercury/Mariner	30	FourStroke	MY 2005 & prior Big Foot	22.5	665
Mercury/Mariner	40	FourStroke	3 cylinder, std. Gearcase	14.9	440
Mercury/Mariner	40	FourStroke	3 cylinder, Big Foot	22.5	665
Mercury/Mariner	40, 45, 50	FourStroke	4 cylinder, 935 cc, std. Gearcase	14.9	440
Mercury/Mariner	40, 45, 50	FourStroke	4 cylinder, 935 cc, Big Foot	22.5	655
Mercury/Mariner	40	FourStroke	4 cylinder, 996 cc, Big Foot	24.0	710
Mercury/Mariner	50, 60	FourStroke	4 cylinder, 996 cc, std. Gearcase	11.5	340
Mercury/Mariner	50, 60	FourStroke	4 cylinder, 996 cc, Big Foot	24.0	710

MERCURY GEARCASE LUBRICANT

HIGH PERFORMANCE GEAR LUBE - SAE 90

Mercury High Performance Gear Lube is recommended for use in marine gear cases with marine engines above 75HP.

SAE 90 GEAR LUBE



92-802851K01
Priced individually, sold @ multiples of 12
237 ml (8 fl oz) tube
Mercury Branded

SAE 90 GEAR LUBE



92-858064K01
Priced individually, sold @ multiples of 6
946 ml (32 fl oz) plastic bottle
Mercury Branded

SAE 90 GEAR LUBE QUART & GEAR LUBE PUMP



91-8M0101435
Gear lube pump and a quart of Hi Performance gear lube conveniently packaged together. Use the pump to replace your gear case oil with ease. Fits all quart and liter bottles.
Gear lube pump: Fits all MerCruiser sterndrives and Mercury/Mariner outboards (except models of Japanese origin) with a 3/8"-16 drain/fill screw. Adapter available
Priced individually, sold @ multiples of 6
Mercury Branded, Clamshell Package Point of Sale Packaged.

SAE 90 GEAR LUBE



92-858065K01
Priced individually, sold @ multiples of 2
9.46 L (2.5 US gal) plastic bottle
Mercury Branded

SAE 90 GEAR LUBE



92-858008K01
18.9L (5 US gal) plastic pail
Mercury Branded

SAE 90 GEAR LUBE



92-858067Q01
60.5 L (16 US gal) drum
Quicksilver Branded

SAE90 GEAR LUBE



92-858068Q01
208 L (55 US gal) drum
Quicksilver Branded

HIGH PERFORMANCE GEAR LUBE CAPACITY CHART

This gear lube capacity chart is limited to recent models and has been developed to aid in determining how much gearlube to have on hand when servicing a particular gearhousing. Changing and servicing of gearlube should always be performed in accordance with techniques and procedures as outlined in the appropriate service or owner manuals. The quantities shown here are to be regarded as reference only. Any variation from the quantities shown may indicate an incorrect model selection, the wrong service technique or a more serious problem. Contact your local dealer prior to running if this should occur.

For outboards 75 hp and up and all sterndrives

Mercury or Quicksilver SAE 90 High Performance Gear Lube is recommended

Brand	Model	Cycle	Model Description	Oz.	mL.
Mercury/Mariner	75, 90	2 cycle	3 cylinder	22.5	665
Mercury/Mariner	100, 115, 125	2 cycle	4 cylinder	22.5	665
Mercury/Mariner	115	2 cycle	3 cylinder Optimax	22.5	665
Mercury/Mariner	135, 150	2 cycle	2.0L	22.5	665
Mercury/Mariner	150, 175, 200	2 cycle	2.5L Carb/EFI/Optimax	22.5	665
Mercury/Mariner	200, 225, 250	2 cycle	3.0L Carb/EFI/Optimax	27.0	798
Force	75	2 cycle		12.0	355
Force	90, 120	2 cycle		22.5	655
Mercury/Mariner	75-90	FourStroke	S/N 1B366822 & below	22.5	665
Mercury/Mariner	75-90	FourStroke	S/N 1B366823 & above	24.0	710
Mercury/Mariner	115	FourStroke		24.0	710
Mercury/Mariner	135/150/175	FourStroke	Verado (RH rotation)	32.8	970
Mercury/Mariner	150 EFI	FourStroke	RH rotation	26.4	780
Mercury/Mariner	200	FourStroke	Verado (RH rotation)	32.8	970
Mercury/Mariner	225 EFI	FourStroke	Standard gearcase	39.0	1.15L
Mercury/Mariner	225/250/275/300	FourStroke	Verado (RH rotation)		
			4.8 Diameter	32.8	970
			5.44 Dia. Sportmaster	20.9	620
			5.44 Dia. HD	17.2	510
			5.44 non-HD	28.7	850
MerCruiser	Alpha One Gen II	4 cycle	without Gear lube Monitor	1.22 US Quarts	1.16L
MerCruiser	Alpha One Gen II	4 cycle	with Round Gear lube Monitor	2.0 US Quarts	1.9L
MerCruiser	Alpha One Gen II	4 cycle	with Rectangular Gear lube Monitor	1.75 US Quarts	1.66L
MerCruiser	Bravo One	4 cycle	without Gear lube Monitor	2.0 US Quarts	1.9L
MerCruiser	Bravo One	4 cycle	with Round Gear lube Monitor	3.25 US Quarts	3.07L
MerCruiser	Bravo One	4 cycle	with Rectangular Gear lube Monitor	2.75 US Quarts	2.6L
MerCruiser	Bravo Two	4 cycle	without Gear lube Monitor	2.5 US Quarts	2.4L
MerCruiser	Bravo Two	4 cycle	with Round Gear lube Monitor	3.75 US Quarts	3.55L
MerCruiser	Bravo Two	4 cycle	with Rectangular Gear lube Monitor	3.25 US Quarts	3.07L
MerCruiser	Bravo Three	4 cycle	without Gear lube Monitor	2.0 US Quarts	1.9L
MerCruiser	Bravo Three	4 cycle	with Rectangular Gear lube Monitor	3.0 US Quarts	2.84L
MerCruiser	Blackhawk	4 cycle	without Gear lube Monitor	1.75 US Quarts	1.66L
MerCruiser	Blackhawk	4 cycle	with Rectangular Gear lube Monitor	2.25 US Quarts	2.1L

MERCURY GEARCASE LUBRICANT ACCESSORIES

GEAR LUBE PUMP



91-8M0072135

Easily replace your lower unit oil with this pump. Fits all quart and liter bottles.

Fits any outboard or stern drive with a 3/8"-16 drain plug. Use adapter (included) for gear cases with an M8x1.25 drain plug.

Priced individually, sold @ multiples of 6

Quicksilver Branded, Clamshell Package Point of Sale Packaged.

GEAR LUBE PUMP ADAPTER



91-883704K03

Adapts our 3/8-16 threaded quart, liter and 2-1/2 gallon gearlube pumps for filling the gearcase.

Fits Mercury/Mariner 4/5 HP (1987 and newer), 4/5/6 HP FourStroke, 225 EFI FourStroke, MY2005 & newer 8/9.9 HP FourStroke, MY2006 & newer 25/30 EFI FourStroke, the 15/20 HP FourStroke (351cc), all Mercury/Mariner outboards of Japanese origin and all Nissan/Yamaha/Tohatsu/Honda outboards with an 8x1.25 metric threaded gear lube fill hole.

Mercury Branded, Clamshell Package Point of Sale Packaged.

GEARCASE FILL SCREW



10-880717A01

Gearlube fill screw and sealing washer that is located in the bearing carrier.

Fits the standard gearcase on the 135-300 hp. Verado outboard and the 3.0L Optimax. Use only if screw location is in the bearing carrier.

MERCURY GREASES

Mercury Grease Product Line Simplified

Mercury greases have gone through a makeover. The product line has been simplified to eliminate confusion about which grease to use in what application. The line has been reduced from six types of grease to three. Below is a summary of the consolidation:

2-4-C Marine Grease – No change

Special 101 – Replaced by 2-4-C Marine Grease
Engine Coupler/Spline Grease - Replaced by Extreme Grease

MARINE GREASE

Mercury 2-4-C Marine Grease with PTFE is a high quality, extremely versatile lithium-based, NLGI 2 grease that won't break down when mixed with water. It also has:
• Excellent resistance to oxidation and degradation
• Extreme pressure additives to withstand friction in a wide variety of operations and temperatures
Replaces Quicksilver Special 101 Lubricant part number 92-802865Q02

For use in the following marine applications:
• Steering systems/cable linkages
• Throttle and shift cables and linkages
• Remote controls
• Prop shafts
• Swivel pins
• Tilt lock mechanisms/tilt tube
• Hinge pins
• Boat trailer wheel bearings

2-4-C MARINE LUBRICANT WITH PTFE



92-802861A 1
Priced individually, sold @ multiples of 10
85 g (3 oz) 3-pack Cartridges
Mercury Branded, Clamshell Package Point of Sale Packaged.

2-4-C MARINE LUBRICANT WITH PTFE AND GREASE GUN



91- 74057K 5
Cartridge gun and one 3 oz.(85 g) cartridge.
Priced individually, sold @ multiples of 4
Mercury Branded, Clamshell Package Point of Sale Packaged.

2-4-C MARINE LUBRICANT WITH PTFE



92-802859A 1
Priced individually, sold @ multiples of 12
227 g (8 oz) tube
Mercury Branded

2-4-C MARINE LUBRICANT WITH PTFE



92-802863A 1
Priced individually, sold @ multiples of 4
397 g (14 oz) cartridge
Mercury Branded

MULTI-PURPOSE GREASE

Mercury Extreme Grease is a formulated for high-temperature and high-load applications.
- Calcium sulfonate-based NLGI 2 grease
- Meets GC-LB requirements
- Excellent rust and corrosion protection
- Formulated for high-temperature and high load applications
- 100% compatible with lithium-based greases

Replaces:
- Mercury Engine Coupler Spline Grease part number 92-802869A1

For use in the following applications for automobiles, light trucks, campers, marine engines, utility trailers, ATV/UTVs, motorcycles and snowmobiles:
- Steering systems/cable linkages
- Throttle and shift cables and linkages
- Drive shaft splines
- Gimbal bearings
- U-Joints
- Suspension systems
- Chassis
- Ball joints
- Disc brakes and ABS applications
- Trailer wheel bearings

See the Non-Marine Application Grease Chart for more information.

EXTREME GREASE



92-8M0071842
Priced individually, sold @ multiples of 4

(14 oz) cartridge
Mercury Branded

GREASE APPLICATION CHARTS

Marine Application Grease Chart

This chart is a general maintenance guide for applying either 2-4-C Marine Grease or Extreme Grease in marine applications. Maintenance schedules for specific models are included in each engine's owner's manual and should be followed as such.

	Outboards	Sterndrives	Freshwater Lubrication Intervals	Saltwater Lubrication Intervals
Steering systems/ cable, linkages	2-4-C	2-4-C	100 hrs./ at least once a year	50 hrs./at least once a year
Throttle and shift cables and linkages	2-4-C	2-4-C	100 hrs.	50 hrs.
Remote controls	2-4-C	2-4-C	100 hrs./or once a year	50 hrs./or once a year
Prop shaft	2-4-C	2-4-C	100 hrs./120 days	50 hrs./60 days
Swivel pins	2-4-C	2-4-C	100 hrs./120 days	50 hrs./60 days
Tilt lock mechanism/ tilt tube	2-4-C		100 days	50 days
Hinge pins		2-4-C	100 hrs./or once a year	50 hrs./or once a year
Drive shaft splines (engine couplers)	Extreme	Extreme	100 hrs./or once a year	50 hrs./or once a year
Gimbal bearings		Extreme	100 hrs./or once a year	50 hrs./or once a year
U-Joint (1)		Extreme	100 hrs./or once a year	50 hrs./or once a year
(1) 1993 and newer Alpha One models have a Perma-lube U-joint which requires no lubrication.				

Non-Marine Application Grease Chart

This chart is a general maintenance guide for applying Extreme Grease in non-marine applications. Maintenance schedules for specific equipment and models are included in your owner's manual and should be followed as such.

Application	ATV/UTV/Motorcycle	Snowmobile	Auto
Steering systems/cable, linkages	X	X	X
Throttle and shift cables and linkages	X	X	X
Drive shaft splines (engine couplers)			X
U Joint	X		X
Suspension systems	X	X	X
Chassis	X		X
Ball joints			X
Disc brakes and ABS apps	X	X	X

MERCURY PAINTS AND FINISH

MERCURY COLORS

PHANTOM BLACK PAINT



92-802878 1

For all Mercury outboards and MCM/MIE engines and drives.
Priced individually, sold @ multiples of 6
340 g (12 oz) spray can
Mercury Branded

PHANTOM BLACK PAINT



92-802878 2

For all Mercury outboards and MCM/MIE engines and drives.
Priced individually, sold @ multiples of 6
18 mL (.6 fl oz) bottle with applicator brush
Mercury Branded

VERADO SILVER



92-802878020

Priced individually, sold @ multiples of 6

340 g (12 oz) can
Mercury Branded

VERADO SILVER



92-802878021

Priced individually, sold @ multiples of 6

18mL (.6 fl oz) bottle with applicator brush
Mercury Branded, Box Point of Sale Packaged.

WARM FUSION PAINT



92-8M0094987

Authentic white paint for Mercury Outboards.
Priced individually, sold @ multiples of 6
340 g (12 oz) spray can
Mercury Branded

COLD FUSION PAINT



92-8M0094988

Authentic white paint for Mercury Outboards.
Priced individually, sold @ multiples of 6
340 g (12 oz) spray can
Mercury Branded

MERCURY RACING PAINT

MERCURY RACING BLUE METALLIC PAINT



92-822825 1

Touch-up paint for Mercury Racing sterndrives.

(6.95 oz.) spray can

MARINER COLORS

MARINER NICKEL GRAY PAINT



92-802878 10

For Mariner outboard lower cowls on 8/9.9/15, 75 hp and larger models - 1994 and newer (except 1997 3.0L Offshore models) and Tracker outboards with silver hoods.

Priced individually, sold @ multiples of 6

340 g (12 oz) spray can

Mercury Branded

MARINER SILVER PAINT



92-802878 12

For Mariner outboard top cowls - 1994 and newer (except 1997 3.0L Offshore models) and Tracker outboards with silver hoods.

Priced individually, sold @ multiples of 6

340 g (12 oz) spray can

Mercury Branded

MARINER LIGHT GRAY PAINT



92-802878 14

For 1985 and newer Mariner outboards (except 1994 and newer top cowls, 1994 and newer lower cowls on 8/9.9/15, 75 hp and larger models and 1997 3.0L Offshore models) also for Tracker outboards with silver hoods.

Priced individually, sold @ multiples of 6

340 g (12 oz) spray can

Mercury Branded

FORCE COLORS

GRAPHITE GRAY PAINT



92-802878 30

For all Force and Tracker outboards with dark gray hoods (1997 and older)

Priced individually, sold @ multiples of 6

340 g (12 oz) spray can

Mercury Branded

MISCELLANEOUS PAINT AND FINISH PRODUCTS

LIGHT GRAY PRIMER



92-802878 52

Priced individually, sold @ multiples of 6

340 g (12 oz) spray can

Mercury Branded

LEVELER



92-802878 54

Smoothes the finish of painted objects.
Priced individually, sold @ multiples of 6

340 g (12 oz) spray can
Mercury Branded

CLEAR COAT



92-802878 53

For cowls on Mercury, Mariner and Force outboards.
Priced individually, sold @ multiples of 6

340 g (12 oz) spray can
Mercury Branded

EDP PROPELLER BLACK PAINT



92-802878 50

Priced individually, sold @ multiples of 6

340 g (12 oz) spray can
Mercury Branded

COWL FINISH COMPOUND



92-859026K 1

Removes minor scratches while providing a high gloss finish
For all Mercury and Mariner cowls
Priced individually, sold @ multiples of 6

250 mL (8.4 oz) bottle
Mercury Branded

MERCURY STEERING FLUID

POWER TRIM AND STEERING FLUID



92-858074K01

A universal hydraulic fluid designed to mix with all hydraulic fluids, protect seals and hoses, and prevent foaming, oxidation and corrosion.

Recommended for all outboard and sterndrive applications except electric power steering systems (use Synthetic Power Steering Fluid SAE 0W30) and non-power hydraulic steering systems (use Hydraulic Helm Steering Fluid)

Recommended for all applications that require a Type F Transmission Fluid

Priced individually, sold @ multiples of 12

237 ml (8 fl oz) plastic bottle

Mercury Branded

POWER TRIM & STEERING FLUID



92-858075K01

A universal hydraulic fluid designed to mix with all hydraulic fluids, protect seals and hoses, and prevent foaming, oxidation and corrosion.

Recommended for all outboard and sterndrive applications except electric power steering systems (use Synthetic Power Steering Fluid SAE 0W30) and non-power hydraulic steering systems (use Hydraulic Helm Steering Fluid)

Recommended for all applications that require a Type F Transmission Fluid

Priced individually, sold @ multiples of 6

946 ml (32 fl oz) plastic bottle

Mercury Branded

SYNTHETIC POWER STEERING FLUID SAE 0W-30



92-858076K01

Recommended for electric power steering systems such as Verado and Axius. Recommended for transmission and steering and actuator systems for Zeus drives

Priced individually, sold @ multiples of 12

236 ml (8 fl oz) plastic bottle

Mercury Branded

SYNTHETIC POWER STEERING FLUID SAE 0W-30



92-858077K01

Recommended for electric power steering systems such as Verado, JPO and Axius Gen II. Recommended for transmission and steering and actuator systems for Zeus drives

Priced individually, sold @ multiples of 6

946 ml (32 fl oz) plastic bottle

Mercury Branded

QUICKSILVER 2-STROKE OIL

APPLICATION AND SKU CHART

2-Stroke Outboard Oil Application Chart

PRODUCT	Low HP: 2.5HP to 30HP	Mid HP: 40 HP to 115HP	High HP: Above 115HP	All HP
	Carubureted or EFI	Carbureted or EFI	Carbureted or EFI	Direct Injection
Premium	*Good	Good	Not recommended	Not recommended
Premium Plus	Better	*Better	*Better	Better
DI Engine Oil	Best	Best	Best	*Best

Quicksilver 2-Stroke Outboard Oil SKU Chart

Item Number	Qty per Case	Container Size	Pallet Qty	Btl Length (in)	Btl Depth (in)	Btl Height (in)	Btl Weight (lb)	Case Length (in)	Case Width (in)	Case Height (in)	Case Weight (lb)	Pallet Weight (lb)
PREMIUM TCW-3® FOR 2-CYCLE OUTBOARDS (EXCEPT OPTIMAX & DFI)												
92-858020Q01	12	PINT	960	3.322	2	7.75	1.083	10.5	8.6	7.9	13	1105
92-858021Q01	6	QUART	468	4.2	2.375	9.25	2.083	8.9	7.7	10.1	12.5	1040
92-858022Q01	3	GALLON	180	7.5	5.1	11.8	8.167	15.875	8	12.875	24.5	1520
92-858023Q01	2	2.5 GAL.	72	9.1	6.8	14.5	20	9.78	14.5	14.5	40	1490
92-858024Q01	1	55 GAL.	4	23	23	34	434	23	23	34	434	1786
PREMIUM PLUS TCW-3® FOR 2-CYCLE OUTBOARDS												
92-858025Q01	12	PINT	960	3.322	2	7.75	1.083	10.5	8.6	7.9	13	1105
92-858026Q01	6	QUART	468	4.2	2.375	9.25	2.083	8.9	7.7	10.1	12.5	1040
92-858027Q01	3	GALLON	180	7.5	5.1	11.8	8.167	15.875	8	12.875	24.5	1520
92-858028Q01	2	2.5 GAL.	72	9.1	6.8	14.5	20	9.78	14.5	14.5	40	1490
92-858029Q01	1	55 GAL.	4	23	23	34	434	23	23	34	434	1786
DIRECT INJECTED (DI) OUTBOARDS												
92-858037Q01	3	GALLON	180	7.5	5.1	11.8	8.167	15.875	8	12.875	24.5	1520
92-858038Q01	2	2.5 GAL.	72	9.1	6.8	14.5	20	9.78	14.5	14.5	40	1490
92-858039Q01	1	55 GAL.	4	23	23	34	434	23	23	34	434	1786

DIRECT INJECTION (DI) ENGINE OIL

Quicksilver's exclusive formulation offers the maximum protection for DI (direct injection) outboard engines. Continued use this oil will:
• Provide outstanding wear and corrosion protection which help extend engine life
• Minimize performance-robbing carbon deposits
• Maintain peak engine performance and reliability
• Reduce smoke

Recommended for use in direct injection two-cycle engines such as Mercury OptiMax®

Exceeds all outboard manufacturer's warranty requirements and recommendations for use in direct injection applications

DIRECT INJECTION ENGINE OIL



92-858037Q01
Priced individually, sold @ multiples of 3
3.78 L (1 US gal) plastic bottle
Quicksilver Branded

DIRECT INJECTION ENGINE OIL



92-858038Q01
Priced individually, sold @ multiples of 2
9.46 L (2 1/2 US gal) plastic bottle
Quicksilver Branded

DIRECT INJECTION ENGINE OIL



92-858039Q01
208 L (55 Gal) drum
Quicksilver Branded

PREMIUM PLUS TCW-3®

Quicksilver's exclusive formulation offers extreme protection for mid- to high-horsepower outboard engines. Continued use this oil will:
• Provide outstanding wear and corrosion protection which help extend engine life
• Minimize performance-robbing carbon deposits
• Maintain peak engine performance and reliability

Recommended for use in oil-injected, carbureted or electronic fuel injected (EFI) mid- to high-horsepower engines such as Mercury®, Mariner® and Force® outboards, Mercury Jet Drives® and Mercury Sport Jet® engines

Meets or exceeds all outboard and personal watercraft manufacturers' warranty requirements and recommendations for use of a TC-W3® oil

PREMIUM PLUS TCW3 OIL



92-858025Q01
Priced individually, sold @ multiples of 12
473 mL (16 fl oz) plastic bottle
Quicksilver Branded

PREMIUM PLUS TCW3 OIL



92-858026Q01
Priced individually, sold @ multiples of 6
946 mL (32 fl oz) plastic bottle
Quicksilver Branded

PREMIUM PLUS TCW3 OIL



92-858027Q01
Priced individually, sold @ multiples of 3
3.78 L (1 US gal) plastic bottle
Quicksilver Branded

PREMIUM PLUS TCW3 OIL



92-858028Q01
Priced individually, sold @ multiples of 2
9.46 L (2.5 US gal) plastic bottle
Quicksilver Branded

PREMIUM PLUS TCW3 OIL



92-858029Q01
208 L (55 US gal) drum
Quicksilver Branded

PREMIUM TCW3®

Quicksilver's exclusive formulation provides superior protection to help extend the life of small horsepower, outboard engines. Continued use of Quicksilver® Premium 2-Cycle oil also helps:
• Prevent corrosion of internal components
• Maintain peak engine performance and reliability

This all weather formula provides protection in temperatures down to -13° F (-25° C).

Recommended for use in pre-mix applications for low-horsepower, carbureted engines such as, outboards, personal watercraft, snowmobiles, motorcycles and chainsaws

Meets all outboard and personal watercraft manufacturers' warranty requirements and recommendations for use of a TC-W3® oil

PREMIUM TCW3 OIL



92-858020Q01
Priced individually, sold @ multiples of 12
473 ml (16 fl oz) plastic bottle
Quicksilver Branded, Point of Sale Packaged.

PREMIUM TCW3 OIL



92-858021Q01
Priced individually, sold @ multiples of 6
946 mL (32 fl oz)
Quicksilver Branded, Point of Sale Packaged.

PREMIUM TCW3 OIL



92-858022Q01
Priced individually, sold @ multiples of 3
3.78 L (1 US gal) plastic bottle
Quicksilver Branded

PREMIUM TCW3 OIL



92-858023Q01
Priced individually, sold @ multiples of 2
9.46 L (2.5 US gal) plastic bottle
Quicksilver Branded

PREMIUM TCW3 OIL



92-858024Q01
208 L (55 US gal) drum
Quicksilver Branded

QUICKSILVER 4-STROKE MARINE ENGINE OIL AND OIL FILTERS

APPLICATION AND SKU CHART

4-Stroke Outboard Oil Application Chart

Product	Low HP: 2.5HP to 30HP	Mid HP: 40HP to 115HP	High HP: Above 115HP	Catalyzed/Non Catalyzed Engines
10W30	Good	Good	Good	Not Recommended
25W40	Good	Good	Good	Good
25W40 Synthetic Blend	Best	Best	Best	Best

Quicksilver 4-Stroke Oil SKU Chart

Item Number	Qty per Case	Container Size	Pallet Qty	Btl Length (in)	Btl Depth (in)	Btl Height (in)	Btl Weight (lb)	Case Length (in)	Case Width (in)	Case Height (in)	Case Weight (lb)	Pallet Weight (lb)
FC-W® SAE 10W30 FOR 4-STROKE MARINE ENGINES												
92-8M0078616	6	QUART	468	4.2	2.375	9.25	2.083	8.9	7.7	10.1	12.5	1040
92-8M0078617	3	GALLON	180	7.5	5.1	11.8	8.167	15.875	8	12.875	24.5	1520
92-8M0078618	1	55 GAL	4	23	23	34	434	23	23	34	434	1786
FC-W® SAE 25W40 FOR 4-STROKE MARINE ENGINES												
92-8M0078619	6	QUART	468	4.2	2.375	9.25	2.083	8.9	7.7	10.1	12.5	1040
92-8M0078620	3	GALLON	180	7.5	5.4	11.8	8.167	15.875	8	12.875	24.5	1520
92-8M0078621	1	55 GAL	4	23	23	34	434	23	23	34	434	1786
FC-W® SAE 25W40 SYNTHETIC BLEND FOR 4-STROKE MARINE ENGINES												
92-8M0078622	6	QUART	468	4.2	2.375	9.25	2.083	8.9	7.7	10.1	12.5	1040
92-8M0078623	3	GALLON	180	7.5	5.4	11.8	8.167	15.875	8	12.875	24.5	1520
92-8M0078624	1	55 GAL	4	23	23	34	434	23	23	34	434	1786
FC-W® SAE 25W50 SYNTHETIC BLEND FOR 4-STROKE MARINE ENGINES												
92-8M0053662	6	QUART	468	4.2	2.375	9.25	2.083	8.9	7.7	10.1	12.5	1040
92-8M0053664	3	GALLON	180	7.5	5.4	11.8	8.167	15.875	8	12.875	24.5	1520
92-858119Q01	1	55 GAL	4	23	23	34	434	23	23	34	434	1786

FCW® 5W30 MARINE OIL

Quicksilver's all new 4-Stroke oil technology outperforms automotive oils in marine applications because of its specialized additive package designed for marine engines.

3 things to know:

• For use in all 4-Stroke Marine Engines - New formula 4-Stroke oils are engineering approved for all marine 4-Stroke applications, including: Outboard, MerCruiser, High Performance, Stern Drive/Inboard, and exceeds all Marine industry 4-Stroke oil requirements.
• Flagship Engine and Corrosion Protection - Industry leading strength and viscosity retention and ultimate corrosion and wear protection
• The most recommended Marine Oil - Over 5 years of engineering and development by the largest marine engine manufacture in the world.

5W30 Full Syntehetic meets the requirements of the API SN Engine Oil Service Category(BEST Choice).

5W30 FULL SYNTHETIC MARINE OIL



92-8M0108524
208 L (55 US gal) drum
Quicksilver Branded

FCW® 10W30 MARINE OIL

Quicksilver's all new 4-Stroke oil technology outperforms automotive oils in marine applications because of its specialized additive package designed for marine engines. The NEW mineral 4-Stroke oil is also now approved for use in all Outboard Engines; previously only our syntetic blend could make this claim.

3 things to know:

• For use in all 4-Stroke Marine Engines - New formula 4-Stroke oils are engineering approved for use in certain marine 4-Stroke Outboard applications and exceeds all Marine industry 4-Stroke oil requirements including FC-W and FC-W Catalyst Compatible. In addition, all 10W30 & 25W40 oils are now fully FC-W Catalyst Compatiable.
• Flagship Engine and Corrosion Protection - Industry leading strength and viscosity retention and ultimate corrosion and wear protection
• The most recommended Marine Oil - Over 5 years of engineering and development by the largest marine engine manufacture in the world.

10W30 is recommended for certain operating temerpatures and manual start applications.

10W30 MARINE OIL



92-8M0078616
Priced individually, sold @ multiples of 6
946 mL (32 fl oz) plastic bottle
Quicksilver Branded

10W30 MARINE OIL



92-8M0078617
Priced individually, sold @ multiples of 3
3.78 L (1 US gal) plastic bottle
Quicksilver Branded

10W30 MARINE OIL



92-8M0078618
208 L (55 US gal) drum
Quicksilver Branded

FCW® 10W40 MARINE OIL

Quicksilver's all new 4-Stroke oil technology outperforms automotive oils in marine applications because of its specialized additive package designed for marine engines. The NEW mineral 4-Stroke oil is also now approved for use in all Outboard Engines; previously only our synthetic blend could make this claim.
3 things to know:
• For use in all 4-Stroke marine engines - New formula 4-Stroke oils are engineering approved for use in certain marine 4-Stroke Outboard applications and exceeds all Marine industry 4-Stroke oil requirements.
• Flagship Engine and Corrosion Protection - Industry leading strength and viscosity retention and ultimate corrosion and wear protection

• The most recommended Marine Oil - Over 5 years of engineering and development by the largest marine engine manufacture in the world.

10W40 is recommended for certain operating temperatures and manual start applications.

10W40 MARINE OIL



92-8M0108523
208 L (55 US gal) drum
Quicksilver Branded

FCW® 25W40 MARINE OIL

Quicksilver's all new 4-Stroke oil technology outperforms automotive oils in marine applications because of its specialized additive package designed for marine engines.

3 things to know:

• For use in all 4-Stroke Marine Engines - New formula 4-Stroke oils are engineering approved for all marine 4-Stroke applications, including: Outboard, MerCruiser, High Performance, Stern Drive/Inboard, and exceeds all Marine industry 4-Stroke oil requirements including FC-W and FC-W Catalyst Compatible.
• Flagship Engine and Corrosion Protection - Industry leading strength and viscosity retention and ultimate corrosion and wear protection.
• The most recommended Marine Oil - Over 5 years of engineering and development by the largest marine engine manufacture in the world.

25W40 recommended in all Marine Engines.

25W40 MARINE OIL



92-8M0078619
Priced individually, sold @ multiples of 6
946 ml (32 fl oz) plastic bottle
Quicksilver Branded

25W40 MARINE OIL



92-8M0078620
Priced individually, sold @ multiples of 3
3.78 L (1 US gal) plastic bottle
Quicksilver Branded

25W40 MARINE OIL



92-8M0078621
208 L (55 US gal) drum
Quicksilver Branded

FC-W® 25W40 SYNTHETIC BLEND MARINE OIL

Quicksilver's all new 4-Stroke oil technology outperforms automotive oils in marine applications because of its specialized additive package designed for marine engines.

3 things to know:

• For use in all 4-Stroke Marine Engines - New formula 4-Stroke oils are engineering approved for all marine 4-Stroke applications, including: Outboard, MerCruiser, High Performance, Stern Drive/Inboard, and exceeds all Marine industry 4-Stroke oil requirements including FC-W and FC-W Catalyst Compatible.
• Flagship Engine and Corrosion Protection - Industry leading strength and viscosity retention and ultimate corrosion and wear protection
• The most recommended Marine Oil - Over 5 years of engineering and development by the largest marine engine manufacture in the world.

25W40 Syntehetic Blend recommended in all Marine Engines (BEST Choice).

25W40 SYNTHETIC BLEND MARINE ENGINE OIL



92-8M0078622
Priced individually, sold @ multiples of 6
946 mL (32 fl oz) plastic bottle
Quicksilver Branded

25W40 SYNTHETIC BLEND MARINE ENGINE OIL



92-8M0078623
Priced individually, sold @ multiples of 3
3.78 L (1 US gal)
Quicksilver Branded

25W40 SYNTHETIC BLEND MARINE OIL



92-8M0078624
208 L (55 Gal) drum
Quicksilver Branded

FCW® 25W50 SYNTHETIC BLEND MARINE OIL

25W50 oil is often recommended for engines used in racing. This high performance oil provides maximum lubrication for your marine engine. This oil:
• Maintains viscosity under the most extreme operating conditions such as
• Racing: Operating engine at maximum output and high temperatures
• Tow sports and fishing: Alternating between periods of high RPM's and throttling down to low RPMs or idle
• Protects against varnish buildup and sludge formation
• Exceeds the rust protection requirements for NMMA certification

Recommended for use in Mercury Verado® outboards and other high-performance marine engines

Exceeds manufacturers' warranty requirements and recommendations for use of an FCW® 25W50 oil

25W50 SYNTHETIC BLEND MARINE ENGINE OIL



92-8M0053662
Priced individually, sold @ multiples of 6
946 mL (32 fl oz) plastic bottle
Quicksilver Branded

25W50 SYNTHETIC BLEND MARINE ENGINE OIL



92-8M0053664
Priced individually, sold @ multiples of 3
3.78 L (1US gal) plastic bottle
Quicksilver Branded

25W50 SYNTHETIC BLEND MARINE ENGINE OIL



92-858119Q01
208 Liters (55 gallons) drum
Quicksilver Branded

OIL CHANGE KITS

Quicksilver oil change kits contain industry-leading Quicksilver 25W-40 Marine Engine Oil. Over five years of engineering and development went into the exclusive Flagship Protection forumla which features a high-tech, advanced set of anti-wear additives that provide up to 33% better camshaft wear protection and the highest levels of corrosion and oxidation protection. Designed to maintain engine reliability and performance, Quicksilver 25W-40 Marine Engine Oil has been proven to hold its viscoscity ratings longer in industry wear testing than other oils on the market. Quicksilver Oil, combined with a genuine Quicksilver Oil Filter team up to provide the highest degree of protection one can get on the water.
Quicksilver launches new convenient oil change kits to make it easy for customers to change their oil. Each kit contains all the items needed to change oil in select Mercury 4-Stroke Outboards:
25W-40 Marine Engine Oil featuring Flagship Protection
Oil Filter
Drain Plug Seal
Drip Tray (where applicable)
Complete instructions printed right on the box

15/20 HP CARB 25W40 MARINE OIL



8M0081910
Priced individually, sold @ multiples of 8
1 L (33.8 fl oz) plastic bottle
Mercury Branded

25/30 HP EFI 25W40 MARINE OIL



8M0081911
Priced individually, sold @ multiples of 4
2 L (67.6 fl oz) plastic bottle
Mercury Branded

40/50/60 HP EFI 25W40 MARINE OIL



8M0081912
Priced individually, sold @ multiples of 4
3 L (101.4 fl oz) plastic bottle
Mercury Branded

75/90/115 HP EFI (1.7L) 25W40 MARINE OIL



8M0081913
Serial Number: 1B366823 - 2B094995
Priced individually, sold @ multiples of 2
5 L (1.41 US gal) plastic bottle
Mercury Branded

75/90/115 HP EFI (2.1L) 10W30 MARINE OIL



8M0107511
Serial Number: 2B094996 & Up
Priced individually, sold @ multiples of 2
5 L (1.41 US gal) plastic bottle
Quicksilver Branded

150 HP 10W30 MARINE OIL



8M0107513
Priced individually, sold @ multiples of 2
6 L (1.58 US gal) plastic bottle
Quicksilver Branded

OIL CAPACITY CHART - 4-STROKE OUTBOARDS

Crankcase Oil Capacity Chart & Quicksilver Filters

Model	Model Note	Year Range	Metric Crankcase Capacity	US Crankcase Capacity	Canister Filter
2.5/3.5 FourStroke		2006 - 2016	0.30 liter (300ml)	0.31 QT. (10 oz.)	N/A
		2016			
4/5/6 FourStroke		1999 - 2016	0.45 liter (450ml)	0.48 QT. (15.2 oz.)	N/A
8 FourStroke	232cc	1995 - 2000	1.0 liter (1,000ml)	1.05 QT. (35 oz.)	N/A
8 FourStroke	323cc	2001 - 2004	1.0 liter (1,000ml)	1.05 QT. (35 oz.)	35-822626Q03
8 FourStroke	209cc	2005 - 2016	0.80 liter (800ml)	0.85 QT. (27 oz.)	N/A
9.9 FourStroke	232cc	1995 - 1998	1.0 liter (1,000ml)	1.05 QT. (35 oz.)	N/A
9.9 FourStroke	323cc	1999 - 2004	1.0 liter (1,000ml)	1.05 QT. (35 oz.)	35-822626Q03
9.9 FourStroke	209cc	2005 - 2016	0.80 liter (800ml)	0.85 QT. (27 oz.)	N/A
15 FourStroke	323cc	1998 - 2008	1.0 liter (1,000ml)	1.05 QT. (35 oz.)	35-822626Q03
15 FourStroke	351cc	2008 - 2016	1.0 liter (1,000ml)	1.05 QT. (35 oz.)	35-822626Q03
20 FourStroke	351cc	2008 - 2016	1.0 liter (1,000ml)	1.05 QT. (35 oz.)	35-822626Q03
25 FourStroke	498cc, Carb Models	1998 - 2006	3.0 liter (3,000ml)	3.17 QT. (106 oz.)	35-8M0065103
25 FourStroke	492cc, EFI Models	2006 - 2016	1.8 liter (1,800ml)	1.90 QT. (63 oz.)	35-822626Q03
30 FourStroke	747cc	1999 - 2005	3.0 liter (3,000ml)	3.17 QT. (106 oz.)	35-8M0065103
30 FourStroke	492cc	2006 - 2016	1.8 liter (1,800ml)	1.90 QT. (63 oz.)	35-822626Q03
40 FourStroke	747cc, 3 cylinder	1999 - 2016	3.0 liter (3,000ml)	3.17 QT. (106 oz.)	35-8M0065103
40 FourStroke	996cc, 4 cylinder	2001 - 2016	3.0 liter (3,000ml)	3.17 QT. (106 oz.)	35-8M0065103
50 FourStroke	935cc, 4 cylinder	1995 - 2000	3.0 liter (3,000ml)	3.17 QT. (106 oz.)	35-8M0065103
50 FourStroke	996cc, 4 cylinder	2001 - 2016	3.0 liter (3,000ml)	3.17 QT. (106 oz.)	35-8M0065103
60 FourStroke	996cc, 4 cylinder	2001 - 2016	3.0 liter (3,000ml)	3.17 QT. (106 oz.)	35-8M0065103
75 FourStroke	Carbureted	2000 - 2005	5.0 liter (5,000ml)	5.28 QT. (176 oz.)	35-8M0065103
75 FourStroke	EFI, s/n 1B366822 & below	2006	4.5 liter (4,500ml)	4.80 QT. (160 oz.)	35-8M0065103
75 FourStroke	EFI, 1B366823-2B094995, 1.7L	2006 - 2014	5.0 liter (5,000ml)	5.28 QT. (176 oz.)	35-877761Q01

QUICKSILVER 4-STROKE MARINE ENGINE OIL AND OIL FILTERS

Model	Model Note	Year Range	Metric Crankcase Capacity	US Crankcase Capacity	Canister Filter
75/80 FourStroke	EFI, 2B094996 & UP, 2.1L	2014 - 2016	5.2 Liter (5,200ml)	5.5 QT. (176 oz.)	35-8M0065103
90 FourStroke	Carbureted	2000 - 2005	5.0 liter (5,000ml)	5.28 QT. (176 oz.)	35-8M0065103
90 FourStroke	EFI, s/n 1B366822 & below	2006	4.5 liter (4,500ml)	4.80 QT. (160 oz.)	35-8M0065103
90 FourStroke	EFI, 1B366823-2B094995, 1.7L	2006 - 2014	5.0 liter (5,000ml)	5.28 QT. (176 oz.)	35-877761Q01
90/100 FourStroke	EFI, 2B094996 & Up, 2.1L	2014 - 2016	5.2 liter (5,200ml)	5.5 QT. (176 oz.)	35-8M0065103
115 FourStroke	EFI, s/n 1B366822 & below	2001 - 2006	5.0 liter (5,000ml)	5.28 QT. (176 oz.)	35-8M0065103
115 FourStroke	EFI, 1B366823-2B094995, 1.7L	2006 - 2014	5.0 liter (5,000ml)	5.28 QT. (176 oz.)	35-877761Q01
115 FourStroke	EFI, 2B094996 & Up, 2.1L	2014 - 2016	5.2 liter (5,200ml)	5.5 QT. (176 oz.)	35-8M0065103
150 FourStroke	EFI	2011 - 2016	6.0 liter (6,000ml)	6.34 QT. (211 oz.)	35-877761Q01
135 Verado	4 cylinder	2006 - 2016	6.0 liter (6,000ml)	6.34 QT. (211 oz.)	35-877767Q01
150 Verado	4 cylinder	2006 - 2016	6.0 liter (6,000ml)	6.34 QT. (211 oz.)	35-877767Q01
175 Verado	4 cylinder	2006 - 2016	6.0 liter (6,000ml)	6.34 QT. (211 oz.)	35-877767Q01
200 Verado	4 cylinder	2007 - 2016	6.0 liter (6,000ml)	6.34 QT. (211 oz.)	35-877767Q01
225 FourStroke	EFI	2003 - 2006	6.0 liter (6,000ml)	6.34 QT. (211 oz.)	35-822626Q15
200 Verado	6 cylinder	2005 - 2016	7.0 liter (7,000ml)	7.40 QT. (246 oz.)	35-877769Q01
225 Verado	6 cylinder	2005 - 2016	7.0 liter (7,000ml)	7.40 QT. (246 oz.)	35-877769Q01
250 Verado	6 cylinder	2005 - 2016	7.0 liter (7,000ml)	7.40 QT. (246 oz.)	35-877769Q01
275 Verado	6 cylinder	2005 - 2016	7.0 liter (7,000ml)	7.40 QT. (246 oz.)	35-877769Q01
300 Verado	6 cylinder	2007 - 2016	7.0 liter (7,000ml)	7.40 QT. (246 oz.)	35-877769Q01
350/400R Verado	6 cylinder	2015 - 2016	7.0 liter (7,000ml)	7.40 QT. (246 oz.)	35-877769Q01

OIL FILTERS FOR FOURSTROKE OUTBOARDS

FOURSTROKE OUTBOARD OIL FILTER



35-822626Q03

FourStroke Outboard replaceable screw-on type canister filters.

Fits Mercury/Mariner 8/9.9 hp. FourStroke outboards (323cc) , 15/20 hp. FourStroke carbureted outboards, and the 25/30 hp. EFI FourStroke outboard (MY2006 & newer).

Quicksilver Branded, Box Point of Sale Packaged.

FOURSTROKE OUTBOARD OIL FILTER



35-8M0065103

FourStroke Outboard replaceable screw-on type canister filters.

Fits Mercury/Mariner 25 hp. FourStroke (Carb, MY2006 & prior), 30 hp. FourStroke (3 cyl., MY2005 & prior), all 40-60 hp. FourStroke outboards (MY 1998 & newer), all 75-115 hp. FourStroke outboards (USA 1B366822 & prior), and all 75-115 hp. FourStroke outboards (USA 2B094996 and above).

Priced individually, sold @ multiples of 6

Quicksilver Branded, Box Point of Sale Packaged.

FOURSTROKE OUTBOARD OIL FILTER



35-822626Q15

Replaceable screw-on type canister filters.

Fits Mercury/Mariner V-225 hp. (V-6) FourStroke outboard and also replaces Yamaha 225 hp. four stroke outboard filter 69J-13440-00-00.

Quicksilver Branded

FOURSTROKE OUTBOARD OIL FILTER



35-877761Q01

Replaceable screw-on type canister filter.

Fits the 75/90/115 hp. FourStroke outboard (USA 1B366823-2B094995, 1731 cc.) and the 150 hp. EFI FourStroke outboard.

Quicksilver Branded, Box Point of Sale Packaged.

FOURSTROKE OUTBOARD OIL FILTER



35-877767Q01

Replaceable screw-on type canister filter. Replaces the production 896546_ series oil filter.

Fits the 135/150/175/200 hp. Verado In-line 4 cylinder outboard.

Quicksilver Branded, Box Point of Sale Packaged.

FOURSTROKE OUTBOARD OIL FILTER



35-877769Q01

Replaceable screw-on type canister filter. Replaces the production 883701_ series oil filter.

Fits the 200/225/250/275/300/350/400R hp. Verado In-line 6 cylinder outboard.

Quicksilver Branded, Box Point of Sale Packaged.

OIL DRAIN FUNNEL KIT



91-892866A01

Helps to direct draining crankcase oil past the cavitation plate.

Fits the XL version of the L6 Verado outboard.

OIL CAPACITY CHART - GASOLINE STERNDRIVE/INBOARD ENGINES

The engine oil capacity is only an Approximate, ALWAYS use dipstick to determine exact quantity of oil required.

MerCruiser Gas Engine Oil Capacity

Model	Make	CID/Litre	Cyl.	Year Range	Serial # Range	Approx. Oil Pan Capacity w/ New Filter(1)
MCM 60	Renault	68/1.1L	I/L 4	1965 - 1968	1887079 - 2049044	2-3/4 US qt (2.6 L)
MCM 80	Renault	80/1.3L	I/L 4	1966 - 1969	2049045 - 2851423	5 US qt (4.7 L)
MCM 90	Renault	96/1.6L	I/L 4	1970 - 1972	2851424 - 3226957	5 US qt (4.7 L)
MCM 110/120/ 2.5L	GM	153/2.5L	I/L 4	1963 - 1989	1537370 - 0C853255	4 US qt (3.8 L)
MCM 140/ 3.0L/LX	GM	181/3.0L	I/L 4	1968 - 2016	2508261 and up	4 US qt (3.8 L)
MCM 470/165/170/ 3.7L	Mercury	224/3.7L	I/L 4	1976 - 1989	4208730 and up	5-1/2 US qt (5.2 L)
MCM 485	Mercury	224/3.7L	I/L 4	1980 - 1982	5685394 - 6218036	5-3/4 US qt (5.4 L)
MCM 488/180/190/ 3.7LX	Mercury	224/3.7L	I/L 4	1983 - 1989	6170297 and up	6-1/2 US qt (6.1 L)
MCM 140	GM	194/3.2L	I/L 6	1963	1538930 - 1725960	5 US qt (4.7 L)
MCM 160/165	GM	250/4.1L	I/L 6	1967 - 1981	2048022 - 5813433	5 US qt (4.7 L)
MCM 200	GM	292/4.8L	I/L 6	1969	2453769 - 2712072	6 US qt (5.7 L)
MCM 185 (4 bbl)	GM	229/3.8L	V-6	1983 - 1984	6330183 - 6919655	4-1/2 US qt (4.3 L)
MCM 175/185/205	GM	262/4.3L	V-6	1985 - 1987	0A331455 - 0B773242	4-1/2 US qt (4.3 L)
MCM 262 Mag EFI	GM	262/4.3L	V-6	1996 - 1997	0F803800 - 0K999999	4-1/2 US qt (4.3 L)
MCM 4.3L/LX/LH/LXH	GM	262/4.3L	V-6	1988 - 2001	0B773243 - 0M299999	4-1/2 US qt (4.3 L)
MCM 4.3L EFI	GM	262/4.3L	V-6	1998 - 2001	0L012009 - 0M299999	4-1/2 US qt (4.3 L)
MCM 4.3L & MPI	GM	262/4.3L	V-6	2002 - 2016	0M300000 and up	4 US qt (3.8 L)
MCM 888	Ford	302/4.9L	V-8	1971 - 1977	3108723 - 4887829	6 US qt (5.7 L)
MCM/MIE 225	Ford	302/4.9L	V-8	1973 - 1974	3385721 - 4176999	6 US qt (5.7 L)
MCM/MIE 215	Ford	302/4.9L	V-8	1970 - 1972	2781153 - 3563181	7 US qt (6.6 L)
MCM 190	GM	283/4.6L	V-8	1963 - 1964	1564539 - 1730903	5 US qt (4.7 L)
MCM 228	GM	305/5.0L	V-8	1977 - 1978	4765100 - 5170008	5 US qt (4.7 L)
MCM 200/ 5.0L/898	GM	305/5.0L	V-8	1977 - 1995	4762210 - 0F600999	5 US qt (4.7 L)
MCM 228/230/ 5.0LX	GM	305/5.0L	V-8	1979 - 1995	5170009 - 0F600999	5-1/2 US qt (5.2 L)
MCM 5.0L & EFI	GM	305/5.0L	V-8	1998 - 2002	0L012052 - 0M299999	5-1/2 US qt (5.2 L)
MCM 5.0L & MPI	GM	305/5.0L	V-8	2002 - 2016	0M300000 and up	4-1/2 US qt (4.25 L)
MIE 198/228/230/ 5.0L	GM	305/5.0L	V-8	1977 - 1988	4762210 - 0B788151	6 US qt (5.7 L)
MCM 225	GM	327/5.4L	V-8	1963 - 1966	1539620 - 2278646	5 US qt (4.7 L)
MCM 225/250	GM	327/5.4L	V-8	1967 - 1969	2278647 - 2694014	7 US qt (6.6 L)
MIE 225/250	GM	327/5.4L	V-8	1968	2278647 - 2694014	6 US qt (5.7 L)
MCM 250/ 255	GM	350/5.7L	V-8	1975 - 1977	4175500 - 4908849	5 US qt (4.7 L)
MCM 260/ 5.7L/LX & EFI	GM	350/5.7L	V-8	1978 - 2002	4908850 - 0M299999	5-1/2 US qt (5.2 L)
MCM 350 Mag, EFI & MPI	GM	350/5.7L	V-8	1986 - 2002	0A635178 - 0M299999	5-1/2 US qt (5.2 L)
MCM 350 Mag & MPI	GM	350/5.7L	V-8	2002 - 2016	0M300000 and up	4-1/2 US qt (4.25 L)
MCM 5.7L	GM	350/5.7L	V-8	2002 - 2016	0M300000 and up	4-1/2 US qt (4.25 L)
MIE 255/260/ 5.7L	GM	350/5.7L	V-8	1975 - 1993	4175500 - 0D839999	6 US qt (5.7 L)
MIE 5.7L & EFI	GM	350/5.7L	V-8	1993 - 1997	0D840000 - 0K999999	4 US qt (3.8 L)
MIE 5.7L/ 350 Mag MPI	GM	350/5.7L	V-8	1998 - 2002	0L002003 - 0M299999	5-1/2 US qt (5.2 L)
MIE 5.7L/ 350 Mag MPI	GM	350/5.7L	V-8	2002 - 2016	0M300000 and up	4-1/2 US qt (4.25 L)

QUICKSILVER 4-STROKE MARINE ENGINE OIL AND OIL FILTERS

Model	Make	CID/Litre	Cyl.	Year Range	Serial # Range	Approx. Oil Pan Capacity w/ New Filter(1)
Ski 5.7L	GM	350/5.7L	V-8	1985 - 1989	0A338553 - 0C756666	4 US qt (3.8 L)
Ski 5.7L/ 350 Mag & MPI	GM	350/5.7L	V-8	1990 - 1997	0C756667 - 0K999999	5 US qt (4.7 L)
Ski 5.7L/ 350 Mag MPI	GM	350/5.7L	V-8	1998 - 2002	0L002005 - 0M299999	5-1/2 US qt (5.2 L)
Ski 5.7L/ 350 Mag MPI	GM	350/5.7L	V-8	2002 - 2016	0M300000 and up	4-1/2 US qt (4.25 L)
Black Scorpion Ski (Gen+)	GM	350/5.7L	V-8	1996 - 1997	0F800000 - 0K999999	5 US qt (4.7 L)
Black Scorpion Ski (Gen+)	GM	350/5.7L	V-8	1998 - 2001	0L002500 - 0M391599	5-1/2 US qt (5.2 L)
Black Scorpion Ski (Gen+)	GM	350/5.7L	V-8	2003 - 2016	0M391600 and up	4-1/2 US qt (4.25 L)
MCM 233/255	Ford	351/5.8L	V-8	1973 - 1977	3258728 - 4902304	5 US qt (4.7 L)
MIE 233/255	Ford	351/5.8L	V-8	1973 - 1976	3258728 - 4775784	7 US qt (6.6 L)
MX 6.2L MPI	GM/Mercury	377/6.2L	V-8	2000 - 2002	0L680003 - 0M299999	5-1/2 US qt (5.2 L)
MX 6.2L MPI	GM/Mercury	377/6.2L	V-8	2002 - 2016	0M300000 and up	4-1/2 US qt (4.25 L)
MX 6.2L MPI MIE	GM/Mercury	377/6.2L	V-8	1999 - 2002	0L670000 - 0M299999	5-1/2 US qt (5.2 L)
MX 6.2L MPI MIE & Ski	GM/Mercury	377/6.2L	V-8	2002 - 2016	0M300000 and up	4-1/2 US qt (4.25 L)
MX 6.2L Blk Scorpion Ski	GM/Mercury	377/6.2L	V-8	2001 - 2003	0L670015 - 0M391599	5-1/2 US qt (5.2 L)
MX 6.2L Blk Scorpion Ski	GM/Mercury	377/6.2L	V-8	2003 - 2016	0M391750 and up	4-1/2 US qt (4.25 L)
MCM 325	GM	427/7.0L	V-8	1969 - 1972	2278747 - 3780449	8 US qt (7.6 L)
MIE 325	GM	427/7.0L	V-8	1968 - 1974	2278747 - 3780449	7 US qt (6.6 L)
MCM 330	GM	454/7.4L	V-8	1977 - 1981	4623115 - 6083144	6 US qt (5.7 L)
MCM 330 & 454 Mag Alpha	GM	454/7.4L	V-8	1982 - 1988	6083145 - 0B785148	7 US qt (6.6 L)
MCM 7.4L & 454 Mag	GM	454/7.4L	V-8	1988 - 1991	0B771113 - 0D603117	8 US qt (7.6 L)
MCM 7.4L/LX & 454 Mag, EFI & MPI	GM	454/7.4L	V-8	1992 - 2001	0D603118 - 0M024999	7 US qt (6.6 L)
MIE 330	GM	454/7.4L	V-8	1977 - 1980	4623115 - 5889913	7 US qt (6.6 L)
MIE 340/ 7.4L w/ Borg Warner trans.	GM	454/7.4L	V-8	1981 - 1992	5889914 - 0D715493	7 US qt (6.6 L)
MIE 7.4L w/Hurth trans.	GM	454/7.4L	V-8	1988 - 1992	0C391564 - 0D715493	8 US qt (7.6 L)
MIE 7.4L & 454 Mag MPI	GM	454/7.4L	V-8	1992 - 2001	0D715494 - 0L674613	7 US qt (6.6 L)
Ski 454 Mag EFI & MPI	GM	454/7.4L	V-8	1995 - 1997	0F215800 - 0K999999	7 US qt (6.6 L)
MCM 390	GM	482/7.9L	V-8	1969 - 1970	2781129 - 3042731	8 US qt (7.6 L)
MIE 390	GM	482/7.9L	V-8	1969 - 1970	2781129 - 2825059	7 US qt (6.6 L)
MCM 496 Mag & HO	GM	496/8.1L	V-8	2001 - 2016	0M025000 and up	9 US qt (8.5L)
MIE 8.1S Horizon & HO	GM	496/8.1L	V-8	2001 - 2016	0M026000 and up	9 US qt (8.5L)
MCM 502 Mag	GM	502/8.2L	V-8	1990 - 1992	0C878221 - 0D824588	8 US qt (7.6 L)
MCM 502 Mag, EFI & MPI	GM	502/8.2L	V-8	1992 - 2001	0D824589 - 0M024999	7 US qt (6.6 L)
MCM 8.2 Mag	GM	502/8.2L	V-8	2010 - 2016	1A350340 and up	7 US qt (6.6 L)
MIE 8.2L	GM	502/8.2L	V-8	1990 - 1996	0C878221 - 0F819619	8 US qt (7.6 L)
MIE 8.2L MPI	GM	502/8.2L	V-8	1996 - 2001	0F819620 - 0L674200	7 US qt (6.6 L)
MIE 8.2	GM	502/8.2L	V-8	2010 - 2016	1A350802 and up	7 US qt (6.6 L)

(1) Approximate, ALWAYS use dipstick to determine exact quantity of oil required

OIL CAPACITY CHART - HI-PERF GASOLINE ENGINE

The engine oil capacity is only an Approximate, ALWAYS use dipstick to determine exact quantity of oil required.

MerCruiser Hp Gas Engine Oil Capacity

Model	CID/Litre	Cyl.	Year Range	Serial # Range	Approx. Oil System Capacity w/ New Filter (1)
270	350/5.7L	V-8	1969 - 1972	2851074 - 3385720	7 US qt (6.6 L)
270 MIE	350/5.7L	V-8	1969 - 1972	2851074 - 3077735	6 US qt (5.7 L)
280 TRS	350/5.7L	V-8	1975 - 1976	4176250 - 4770199	6-1/2 US qt (6 L)
300 Tempest	350/5.7L	V-8	1985 - 1986	6668677 - 0B430367	6-1/2 US qt (6 L)
320 (EFI)	350/5.7L	V-8	1987 - 1989	0A543604 - 0C622418	6-1/2 US qt (6 L)
377 Scorpion (Sterndrive)	377/6.2L	V-8	2000 - 2016	0L416146 and up	5 US qt (4.7 L)
377 Scorpion Ski	377/6.2L	V-8	1997 - 1998	0K000656 - 0L600314	5 US qt (4.7 L)
370 TRS	454/7.4L	V-8	1978 - 1987	4179554 - 0B714586	6 US qt (5.7 L)
400 TRS (Cyclone)	454/7.4L	V-8	1980 - 1986	4179554 - 0B457644	7 US qt (6.6 L)
420	454/7.4L	V-8	1987 - 1989	0A398941 - 0B622418	6 US qt (5.7 L)
425	454/7.4L	V-8	1990 - 1992	0B622419 - 0D725499	8 US qt (7.6 L)
425 (Gen. V)	454/7.4L	V-8	1992 - 1993	0D725500 - 0D937011	8 US qt (7.6 L)
440 TRS (Cyclone)	454/7.4L	V-8	1983 - 1986	4179554 - 0B485220	7 US qt (6.6 L)
450 (Gen. V)	454/7.4L	V-8	1995 - 1996	0F347100 - 0F347277	8 US qt (7.6 L)
525 SC	454/7.4L	V-8	1991 - 1992	0D456000 - 0D725808	8 US qt (7.6 L)
525 SC (Gen. V)	454/7.4L	V-8	1992 - 1999	0D763746 - 0L415623	8 US qt (7.6 L)
460 TRS (Cyclone)	482/7.9L	V-8	1983 - 1986	4179554 - 6181046	10 US qt (9.4L)
465	502/8.2L	V-8	1990 - 1992	0C849992 - 0D725646	8 US qt (7.6 L)
465 (Gen. V)	502/8.2L	V-8	1992 - 1994	0D725647 - 0F213244	8 US qt (7.6 L)
500 (Gen. V)	502/8.2L	V-8	1994 - 1996	0F213293 - 0F745159	8 US qt (7.6 L)
500 (Gen VI)	502/8.2L	V-8	1997 - 1998	0F745195 - 0L001772	8 US qt (7.6 L)
500 (Gen +)	502/8.2L	V-8	1999	0L414639 - 0L601036	8 US qt (7.6 L)
500 EFI	502/8.2L	V-8	1999 - 2005	0L001477 and up	7 US qt (6.6 L)
575 SCi	502/8.2L	V-8	2001	0L306696 - 0L307026	8 US qt (7.6 L)
575 SCi	502/8.2L	V-8	2000	0L601000 - 0L602090	8 US qt (7.6 L)
575 SCi	502/8.2L	V-8	2001 - 2005	0M050000 - 0M950526	8 US qt (7.6 L)
600 SC	502/8.2L	V-8	1991 - 1992	0D456489 - 0D456768	8 US qt (7.6 L)
600 SC (Gen. V)	502/8.2L	V-8	1992 - 2000	0D725676 and up	8 US qt (7.6 L)
500 Bulldog	540/8.9L	V-8	1990 - 2001	0C577254 - 0M050281	12 US qt (11.3 L)
575	540/8.9L	V-8	1986 - 1992	0A677429 - 0D763716	7 US qt (6.6 L)
800 SC (Gen. V)	572/9.4L	V-8	1993 - 1998	0D763836 and up	9 US qt (8.5L)
900 SC	542/8.9L	V-8	1998 - 2000	0K999856 - 0L602069	11 US qt (10.5 L)
900 SC (Dry Sump)	542/8.9L	V-8	2001 - 2016	0L306805 and up	16 US qt (15.2 L)

(1) Approximate, ALWAYS use dipstick to determine exact quantity of oil required

OIL FILTERS FOR MERCRUISER GAS ENGINES

OIL FILTER



35-883702Q

Fits MCM V-6 models that have the oil filter mounted on the engine block. Not for use with V-6 engines that have a remote oil filter.

Quicksilver Branded, Box Point of Sale Packaged.

OIL FILTER



35-866340Q03

Fits all MCM/MIE GM engines, except V-6 models that have the oil filter mounted on the engine block. Also fits the 4.5L and 6.2L Mercury engine.

Priced individually, sold @ multiples of 6

Quicksilver Branded, Box Point of Sale Packaged.

OIL FILTER



35-858004Q

High efficiency, High performance synthetic media removes over 97% of oil contaminants versus 78% for conventional paper element filters.

Fits all MCM/MIE GM engines, except V-6 models that have the oil filter mounted on the engine block.

Quicksilver Branded, Box Point of Sale Packaged.

OIL FILTER



35-802886Q

Fits all MCM/MIE Ford engines

Quicksilver Branded, Box Point of Sale Packaged.

OIL FILTER



35- 16595Q

Fits 2006 & older MCM Hi-Performance GM V-8 engines.

Quicksilver Branded, Box Point of Sale Packaged.

QUICKSILVER DIESEL STERNDRIVE/INBOARD OIL AND OIL FILTERS

SKU CHART

Quicksilver Diesel Engine Oil SKU Chart

Item Number	Qty per Case	Container Size	Pallet Qty	Btl Length (in)	Btl Depth (in)	Btl Height (in)	Btl Weight (lb)	Case Length (in)	Case Width (in)	Case Height (in)	Case Weight (lb)	Pallet Weight (lb)
SAE 15W40 DIESEL FOR STERNDRIVES/INBOARDS												
92-858042Q01	3	4 LITER	180	7.5	5.1	11.8	8.167	15.875	8	12.875	24.5	1520
92-858043Q01	1	208 LITER	4	23	23	34	434	23	23	34	434	1786
SAE 5W30 FOR TURBOCHARGED DIRECT INJECTION (TDI) ENGINES												
92-8M0069603	6	1 LITER	468	4.2	2.375	9.25	2.083	8.9	7.7	10.1	12.5	1040
92-8M0069602	3	4 LITER	180	7.5	5.1	11.8	8.167	15.875	8	12.875	24.5	1520
92-8M0069604	1	112 LITER	4									

SAE 5W30

Optimizes engine performance in marine applications because this stable, stay-in-grade formula resists thermal breakdown and oxidation under extreme conditions. Use of this oil will:
- Protect anti-pollution systems
- Increase the life of diesel particulate filters (DPF)
- Provide outstanding wear and corrosion protection which help extend engine life

Meets international ACEA C3 specifications
Meets OEM approvals for:
- Volkswagen® VW 501.00/507.00
- BMW® LL-04
- Mercedes-Benz® MB-Approval 229.51
- Porsche® C30

For use in Turbocharged Direct Injection (TDI) engines

5W30 FULL SYNTHETIC TDI ENGINE OIL



92-8M0069603
Priced individually, sold @ multiples of 6
1L (33.8 oz) plastic bottle
Quicksilver Branded

5W30 FULL SYNTHETIC TDI ENGINE OIL



92-8M0069602
Priced individually, sold @ multiples of 3
4 L (1.06 gal) plastic bottle
Quicksilver Branded

5W30 FULL SYNTHETIC TDI ENGINE OIL



92-8M0069604
112 L (30 gal) drum
Quicksilver Branded

SAE 15W40

Protects better than standard fleet oils. Use of this oil will:
• Provide outstanding wear and corrosion protection which help extend engine life
• Control soot, deposits and oil thickening
• Prevent sludge and varnish deposits

Meets or exceeds API CH-4/CF-4/SJ

Meets or exceeds OEM approvals for:
• Mercury® non-TDI diesel applications
• Volvo® VDS®
• Caterpillar® CD/TO-2
• Cummins®
• Detroit Diesel®
• And other diesel engines

15W40 DIESEL ENGINE OIL



92-858042Q01
Priced individually, sold @ multiples of 3
4 L (1.06 US gal) plastic bottle
Quicksilver Branded

15W40 DIESEL ENGINE OIL



92-858043Q01
208 L (55 US gal) drum
Quicksilver Branded

OIL CAPACITY CHART - DIESEL ENGINE

The engine oil capacity is only an Approximate, ALWAYS use dipstick to determine exact quantity of oil required.

MerCruiser Diesel Engine Oil Capacity

Model	CID/Litre	Cyl.	Year Range	Serial # Range	Approx. Oil Pan Capacity w/ New Filter
D1.7L DTI (Alpha)	103/1.7L	I/L 4	2001 - 2016	0M055000 and up	4.75 US qt (4.5 L)
SDI 40/50/60	116/1.9L	I/L 4	2003 - 2012	All - All	4.75 US qt (4.5 L)
TDI 45/75	116/1.9L	I/L 4	2003 - 2012	All - All	4.75 US qt (4.5 L)
QSD 2.0L 115/130/150/170	2.0L	I/L4	All	All - All	5.5 US qt (5.2L)
SDI 55/75	153/2.5L	I/L 5	2002 - 2016	All - All	6.34 US qt (6 L)
TDI 100/120/140/150/165	153/2.5L	I/L 5	2002 - 2016	All - All	6.34 US qt (6 L)
D2.8L D-Tronic (Bravo & MIE)	169/2.8L	I/L 4	1997 - 2016	0K144109 and up	8.45 US qt (8 L)
TDI 100/225/230/260/265	181/3.0L	V-6	2006 - 2016	All - All	8.45 US qt (8 L)
D183 Turbo AC (Bravo & MIE)	183/3.0L	I/L 5	1990 - 1993	0B993002 - 0D725151	9.5 US qt (9 L)
530 D-TA (Bravo & MIE)	183/3.0L	I/L 5	1989 - 1993	0B993002 - 0D725151	9.5 US qt (9 L)
D3.0L (Bravo & MIE)	183/3.0L	I/L 5	1994 - 1997	0D725152 and up	9.5 US qt (9 L)
D219 Turbo AC (Bravo & MIE)	219/3.6L	I/L 6	1990 - 1993	0B993002 - 0D850127	10.56 US qt (10 L)
636 D-TA (Bravo & MIE)	219/3.6L	I/L 6	1989 - 1993	0B993002 - 0D850127	10.56 US qt (10 L)
D3.6L (Bravo & MIE)	219/3.6L	I/L 6	1994 - 1997	0D850128 and up	10.56 US qt (10 L)
D3.6L W (Bravo)(MCM)(Intl.)	219/3.6L	I/L 6	1997	0K000001 and up	10.56 US qt (10 L)
TDI 335/350/370	254/4.2L	V-8	2009 - 2016	All - All	10 US qt (9.5 L)
D254 Turbo AC (Bravo & MIE)	254/4.2L	I/L 6	1990 - 1993	0C849461 - 0D554731	12.68 US qt (12 L)
D4.2L (Bravo & MIE)	254/4.2L	I/L 6	1994 - 1997	0D554732 and up	12.68 US qt (12 L)
D4.2L D-Tronic (Bravo & MIE)	254/4.2L	I/L 6	1997 - 2016	0K144114 and up	12.68 US qt (12 L)

QUICKSILVER DIESEL STERNDRIVE/INBOARD OIL AND OIL FILTERS

Model	CID/Litre	Cyl.	Year Range	Serial # Range	Approx. Oil Pan Capacity w/ New Filter
D4.2L LD	254/4.2L	I/L6	1999 - 2016	0L344381 and up	12.68 US qt (12 L)
7.3L (Bravo & MIE)	444/7.3L	V-8	1994 - 1996	0F060000 and up	12 US qt (11.3 L)
D7.3L D-Tronic	444/7.3L	V-8	1996 - 2001	0K095775 and up	16-1/2 US qt (15.6 L)

(1) Approximate, ALWAYS use dipstick to determine exact quantity of oil required

OIL FILTERS FOR MERCRUISER DIESEL ENGINES

OIL FILTER ELEMENT



882687

Fits 1.7L MS 120 diesel.

OIL FILTER



35-895207

3.25 in. (83 mm) diameter

Fits CMD diesel engines D2.8L (170 & 200) (s/n 88010001 and up). Also fits QSD 2.0 (early version), 2.8 & 4.2 engines

OIL FILTER



35-879312041

2.625 in. (67 mm) diameter

Fits 2008 & newer QSD 2.0 engines.
MCM ES 130 (s/n 88206399 and up)
MCM ES 150 (s/n 88221799 and up)
MCM ES 170 (s/n 88231000 and up)
MIE EI 115 (s/n 88200499 and up)
MIE EI 130 (s/n 88205099 and up)
MIE EI 150 (s/n 88220299 and up)
MIE EI 170 (s/n 88230000 and up)

OIL FILTER



35- 19485

Fits diesel engines D2.8L E models (s/n 88010000 and below), D3.0L (s/n 0D725460 and up), D3.6L (s/n 0F306930 and up), D4.2L (s/n 0F450250 and up), D4.2L E models, D183, D219, 530D-TA & 636D-TA.

OIL FILTER



35-816168

Fits diesel engines D3.0L (s/n 0D725152-0D725459), D3.6L (s/n 0D850128-0F306929) & D4.2L (s/n 0D554732-0F450249).

OIL FILTER



35-8M0066483

Element

Fits 3.0L V6 & 4.2L V8 TDI diesel engine

OIL FILTER



35-805809T

5.5 in. (139.7 mm) length
Fits D7.3L diesel engines

OIL FILTER



35-862889

7.5 in (190.5 mm) long
Fits MCM D7.3L D-tronic diesel engines (s/n 0L050050-0L391832)

QUICKSILVER POWERSPORTS LUBRICANTS

ATV/UTV

Quicksilver Full Synthetic Four-Stroke ATV and UTV Oil meets the needs of all four-stroke ATV and UTV engines. It provides protection and easy starting in all climates and all seasons. Continued use of this oil will:
• Provide outstanding wear and corrosion protection which helps extend engine life
• Minimize performance-robbing deposits
• Maintain peak engine performance and reliability

Meets or exceeds manufacturer's warranty requirements. Using this product will not void manufacturer warranties.

Meets or exceeds API SF/SG/SJ/SL/SM

Recommended for use in air- or liquid-cooled engines.

5W40 FULL SYNTHETIC ATV/UTV OIL



92-8M0058914
Priced individually, sold @ multiples of 6

946.mL (32 oz) plastic bottle
Quicksilver Branded

MOTORCYCLE

Quicksilver has two all-new, full-synthetic four-stroke motorcycle oils that provide maximum protection and engine performance for all types of bikes.

SAE 10W40 is for all four-stroke motorcycles and scooters including sport, dual sport, off-road bikes and other high-revving engines.

The wet clutch compatible formula prevents clutch slippage and provides:
• High temperature durability
• High RPM protection
• Optimum horsepower

SAE 20W50 is for air- or liquid-cooled V-Twin and large displacement engines. Use of this oil:
• Protects against the high temperature operation found in air-cooled, V-Twin engines
• Protects gears, transmission and wet clutch

Both oils meet or exceed manufacturer's warranty requirements. Using this product will not void manufacturer warranties.

Both formulas meet or exceed API SF/SG/SJ/SL/SM and JASO MA2

10W40 FULL SYNTHETIC MOTORCYCLE OIL



92-8M0058915
Priced individually, sold @ multiples of 6
946 ml (32 ounces) bottle
Quicksilver Branded

10W40 FULL SYNTHETIC MOTORCYCLE OIL



92-8M0060085
Priced individually, sold @ multiples of 3

3.78 liters (1 gallon) bottle
Quicksilver Branded

20W50 FULL SYNTHETIC MOTORCYCLE OIL



92-8M0058916
Priced individually, sold @ multiples of 6

946 ml (32 oz) bottle
Quicksilver Branded

20W50 FULL SYNTHETIC MOTORCYCLE OIL



92-8M0060086
Priced individually, sold @ multiples of 3

3.78 liters (1 gallon) bottle
Quicksilver Branded

PERSONAL WATERCRAFT (PWC)

Quicksilver Full Synthetic Two-Stroke Personal Watercraft Oil meets the needs of all two-stroke PWC and sport boat engines. This low smoke/low odor formula keeps your engine cleaner. Continued use of this oil will:
• Provide outstanding wear and corrosion protection which helps extend engine life
• Minimize performance-robbing carbon deposits
• Maintain peak engine performance and reliability

Meets or exceeds manufacturer's warranty requirements. Using this product will not void manufacturer warranties.

Exceeds JASO FD and ISO EGD

Recommended for use in all two-stroke personal watercraft engines. Can be used in oil-injected or pre-mix applications.

2-STROKE FULL SYNTHETIC PWC OIL



92-8M0058907
Priced individually, sold @ multiples of 6
946 mL (32 oz.) plastic bottle
Quicksilver Branded

2-STROKE FULL SYNTHETIC PWC OIL



92-8M0058908
Priced individually, sold @ multiples of 3
3.78 L (1 gallon) plastic bottle
Quicksilver Branded

SNOWMOBILE

Quicksilver Full Synthetic Two-Stroke Snowmobile oil meets the needs of all two-stroke snowmobiles. This low smoke/low odor formulation keeps power valves clean. Continued use of this oil will:
• Provide outstanding wear and corrosion protection which helps extend engine life
• Minimize performance-robbing carbon deposits
• Maintain peak engine performance and reliability

Meets or exceeds manufacturers' warranty requirements. Using this product will not void manufacturer warranties.

Exceeds JASO FD and ISO EGD

Recommended for use in all air- or liquid-cooled engines. Can be used in oil-injected or pre-mix applications.

2-STROKE FULL SYNTHETIC SNOWMOBILE OIL



92-8M0058910
Priced individually, sold @ multiples of 6

946 mL (32 oz) bottle
Quicksilver Branded

2-STROKE FULL SYNTHETIC SNOWMOBILE OIL



92-8M0058912
Priced individually, sold @ multiples of 3

3.78 L (1 Gallon) bottle
Quicksilver Branded

QUICKSILVER CORROSION PROTECTION

CORROSION GUARD



92-802878Q55

Corrosion Guard is a rust inhibitor that forms a water resistant barrier on non-painted and painted surfaces.

Use to prevent rust from forming on out drives, lower units and power trim motors and components or other metal surfaces. Can also be used to prevent further paint damage in areas where undercutting and blistering have occurred. Do not spray on surfaces coated with antifouling or biocide paint. Do no spray on drive belts.

Priced individually, sold @ multiples of 6

312 g (11 oz) spray can

Quicksilver Branded

SILICONE DIELECTRIC COMPOUND



92-823506 1

Protects and displaces moisture from spark plug boots, coils, and electrical switches.

227 g (8 oz) tube

Quicksilver Branded

STORAGE SEAL FOGGING OIL



92-858081Q03

Quicksilver Storage Seal forms a protective barrier that prevents rust on internal metal surfaces. It also keeps cylinders lubricated to prevent cylinder or piston damage when starting your engine after storage.

Use in all 2- and 4-cycle carbureted and fuel-injected gasoline engines including cars, trucks, motorcycles, ATVs, snowmobiles, marine engines, lawn mowers, chain saws, string trimmers and snow blowers.
Safe for catalyzed engines.

Priced individually, sold @ multiples of 12

340 g (12 oz) spray can

Quicksilver Branded

STORAGE SEAL FOGGING OIL



92-802879Q 1

Priced individually, sold @ multiples of 2

3.78 L (1 US gal) plastic bottle

Quicksilver Branded

QUICKSILVER ENGINE COOLANT AND WATER SYSTEM ANTIFREEZE

EXTENDED LIFE COOLANT/ANTIFREEZE



92-877770Q 1

Provides extended life protection for closed cooling systems. This 5 year, 1000 hour protection is ethylene glycol based and pre-diluted 50/50 with de-ionized water. It is silicate and phosphate free and will not cause gelling. Provides freeze protection down to -34 deg. F and boiling protection to 265 deg. F. It is also compatible with conventional anti-freeze, but dilution will reduce extended life benefits.

Meets ASTM D-3306, ATSM D-4340

For use in all MCM/MIE gasoline engines with closed cooling systems.
Also recommended for the following applications:
- ANFOR R 15-601
- BS 6580 (British standard)
- Chrysler® MS7170
- Chrysler® MS9769
- Ford® ESE-M97B44-A
- Ford® WSS-M97B44-D
- Ford® WSS-M97B51-A1
- FVV HEFT R443 (Germany)
- GM® 1825M
- GM® 6277M (DEX-COOL® specification)
- JASO M325 (Japan)
- JIS K 2234 (Japan)
- SAE J1034
- Mercedes Benz® DBL 7700

Priced individually, sold @ multiples of 4

3.78 L (1 US gal) plastic bottle

Quicksilver Branded

LONG LIFE COOLANT/ANTIFREEZE



92-8M0110567

Long Life Coolant/Antifreeze Concentrated.

Provides extended life protection for closed cooling systems. It is silicate and phosphate free and will not cause gelling. It is also compatible with conventional antifreeze, but dilution will reduce extended life benefits.

Meets or Exceeds G12++ Perfmormance Requirements
Meets ASTM D-3306, ATSM D-4340

Recommended for the following applications:
- ANFOR R 15-601
- BS 6580 (British standard)
- Chrysler® MS7170
- Chrysler® MS9769
- Ford® ESE-M97B44-A
- Ford® WSS-M97B44-D
- Ford® WSS-M97B51-A1
- FVV HEFT R443 (Germany)
- GM® 1825M
- GM® 6277M (DEX-COOL® specification)
- JASO M325 (Japan)
- JIS K 2234 (Japan)
- SAE J1034
- Mercedes Benz® DBL 7700
- VW® TL774-D
- VW® TL774-F
- VW® TL774-G

Priced individually, sold @ multiples of 4

3.78L (1 Gallon) plastic bottle

Quicksilver Branded

EXTENDED LIFE COOLANT/ANTIFREEZE



92-8M0070979

Coolant/Antifreeze Concentrated.

Provides extended life protection for closed cooling systems. It is silicate and phosphate free and will not cause gelling. It is also compatible with conventional antifreeze, but dilution will reduce extended life benefits.

Meets ASTM D-3306, ATSM D-4340

Recommended for the following applications:
- ANFOR R 15-601
- BS 6580 (British standard)
- Chrysler® MS7170
- Chrysler® MS9769
- Ford® ESE-M97B44-A
- Ford® WSS-M97B44-D
- Ford® WSS-M97B51-A1
- FVV HEFT R443 (Germany)
- GM® 1825M
- GM® 6277M (DEX-COOL® specification)
- JASO M325 (Japan)
- JIS K 2234 (Japan)
- SAE J1034
- Mercedes Benz® DBL 7700
- VW® TL774-D
- VW® TL774-F
- VW® TL774-G

Priced individually, sold @ multiples of 4

3.78L (1 Gallon) plastic bottle

Quicksilver Branded

-50ºF (-46ºC) WATER SYSTEM ANTI-FREEZE



92-8M0073196

Quicksilver -50º water system anti-freeze provides the ultimate in cold weather and corrosion protection. It prevents marine engine cooling systems and boat, RV and home plumbing systems from bursting in cold weather. Its premium additive package prevents corrosion of aluminum, copper, brass and solder, and will not harm rubber seals, or hose materials. The 3X-died bright pink color provides excellent blow-through visibility. Formulated with non-toxic, virgin propylene glycol (29% blend).

- Glycerin-free formula
- Provides burst protection to -50ºF (-46ºC)
- Provides freeze protection within a range of 12ºF to 16ºF (-11ºC to -8ºC)

This product is ready-to-use; DO NOT DILUTE

Priced individually, sold @ multiples of 6

3.78 L (1 Gallon) bottle

Quicksilver Branded

-50ºF (-46ºC) WATER SYSTEM ANTI-FREEZE



92-8M0073197

208 L (55 Gallons) drum

Quicksilver Branded

-100ºF (-73ºC) WATER SYSTEM ANTI-FREEZE



92-8M0073198

Quicksilver -100º water system anti-freeze provides the ultimate in cold weather and corrosion protection. It prevents marine engine cooling systems and boat, RV and home plumbing systems from bursting in cold weather. Its premium additive package prevents corrosion of aluminum, copper, brass and solder, and will not harm rubber seals, or hose materials. The 3X-died blue-green color provides excellent blow-through visibility. Formulated with non-toxic, virgin propylene glycol (51% blend).

- Glycerin-freel formula
- Provides burst protection to -100ºF (-73ºC)
- Provides freeze protection within a range of -58ºF to -63ºF (-50ºC to -52ºC)

This product is ready-to-use or may be diluted - follow label instructions for dilution ratios

Priced individually, sold @ multiples of 6

3.78 L (1 Gallon) bottle

Quicksilver Branded

-100ºF (-73ºC) WATER SYSTEM ANTI-FREEZE



92-8M0073199

208 L (55 Gallons) drum

Quicksilver Branded

-200ºF (-129ºC) WATER SYSTEM ANTI-FREEZE



92-8M0073200

Quicksilver -200º water system anti-freeze provides the ultimate in cold weather and corrosion protection. It prevents marine engine cooling systems and boat, RV and home plumbing systems from bursting in cold weather. Its premium additive package prevents corrosion of aluminum, copper, brass and solder, and will not harm rubber seals, or hose materials. The 3X-died bright green color provides excellent blow-through visibility. Formulated with non-toxic, virgin propylene glycol (97% blend).

- Glycerin-free formula
- Provides burst protection to -200ºF (-129ºC)
- Provides freeze protection within a range of -98ºF to -103ºF (-72ºC to -75ºC)

This product is ready-to-use or may be diluted

208 L (55 Gallons) drum
Quicksilver Branded

QUICKSILVER FUEL SYSTEM CARE AND MAINTENANCE

WATER ELIMINATOR



67-808887Q

Contains a drying agent commonly used to keep small, sealed containers dry. It absorbs water that has collected in the fuel tank.
How to use: Attach to the inside fuel cap with the lanyard (included). Adjust the lanyard so the Water Eliminator sits at the bottom of the fuel tank. Replace as needed.
For use in all octane grades of gasoline, including ethanol blended. Not recommended for diesel fuel.

For use in all 2-cycle and 4-cycle gasoline outboard, sterndrive, inboard and jet drive marine engines.

Priced individually, sold @ multiples of 6

Quicksilver Branded, Point of Sale Packaged.

ALCOHOL TESTER



91-879172T28

Test Tube used to find the ethanol/alcohol percentage in gasoline.

Directions:
Step 1: Add water to the water line.
Step 2: Add gasoline to the gasoline line.
Step 3: Replace cap and shake vigorously
Step 4: Stand vial vertically with cap upright for 10 minutes.
Step 5: Locate the gasoline/water separation line and read scale. The separation line will indicate the percentage of alcohol, if present.

FUEL TREATMENT

Quickare is a fuel treatment that can be used at every fill-up to:
• Maximize engine performance with all grades of gasoline
• Help control corrosion, gum and varnish build-up and phase separation associated with ethanol-blended fuel
• Help control moisture and corrosion problems associated with non-ethanol-blended fuel
• Clean up existing varnish and gum deposits from fuel lines, tanks, carburetors and injectors, intake valves and spark plugs
• Keep fuel fresh between fill-ups - up to 3 months

1 ounce treats 10 gallons

Use in all 2- and 4-cycle carbureted and fuel-injected gasoline engines including cars, trucks, motorcycles, ATVs, snowmobiles, marine engines, lawn mowers, chain saws, string trimmers and snow blowers. Safe for catalyzed engines.

QUICKARE FUEL TREATMENT



92-8M0047920

1 ounce treats 10 gallons - 12 ounce bottle treats 120 gallons
Priced individually, sold @ multiples of 12

355 mL (12 oz) plastic bottle
Quicksilver Branded

QUICKARE FUEL TREATMENT



92-8M0058680

.8ml ounce treats 1L of fuel - 946ml ounce bottle treats 1211 L
Priced individually, sold @ multiples of 6

946 mL (32 oz) bottle
Quicksilver Branded

QUICKQUARD DIESEL FUEL TREATMENT



92-8M0089198

Quickguard marine diesel additive is the industry's most complete multifunctional premium diesel additive with cetane improver. Diesel Guard Heavy Duty/Marine diesel additive upgrades typical No. 2 diesel fuel to a high cetane premium diesel. It is documented in fleet and laboratory tests to significantly improve engine performance, increase fuel economy, and reduce exhaust emissions. Typical applications include marine, and other heavy duty diesel applications.

Use of Quickguard Diesel Additive helps to:
- Stabilize fuel to prevent sludge
- Reduce smoke, exhaust emissions, and odor
- Provide thermal and storage stability
- Increase cetane up to 4 numbers
- Exceed L-10 Superior injector cleanliness rating (10 CRC max)
- Clean up injector deposits
- Exceed OEM lubricity standards
- Prevent corrosion
- Prevent filter plugging
- Increase filter life
- Improve fuel economy up to 13.6%
- Demulsify water

Treats up to 946 Liters.

Priced individually, sold @ multiples of 6
946 mL (32 oz)
Quicksilver Branded

ENGINE AND FUEL SYSTEM CLEANER

Quickleen should be used throughout the boating season to:
- Quickly and thoroughly remove carbon deposits from carburetors and injectors, intake valves, spark plugs, piston crowns and cylinder heads
- Prevent engine knocking and piston seize-up
- Extend spark plug life

1 ounce treats 5 gallons

Note: This product does not contain fuel stabilizers. use Quickare to prevent fuel breakdown and oxidation.

Use in all 2- and 4-cycle carbureted and fuel-injected gasoline engines including cars, trucks, motorcycles, ATVs, snowmobiles, marine engines, lawn mowers, chain saws, string trimmers and snow blowers. Safe for catalyzed engines.

QUICKLEEN ENGINE AND FUEL SYSTEM CLEANER



92-8M0047921

1 ounce treats 5 gallons - 12 ounce bottle treats 60 gallons
Priced individually, sold @ multiples of 12

355 mL (12 oz.) plastic bottle
Quicksilver Branded

QUICKLEEN ENGINE AND FUEL SYSTEM CLEANER



92-8M0058681

1.6ml treats 1 L of fuel
946ml bottle treats 1211L of fuel
Priced individually, sold @ multiples of 6
946 mL (32 oz)
Quicksilver Branded

POWER TUNE INTERNAL ENGINE CLEANER



92-858080Q03

Quicksilver Power Tune© is recommended to assist in restoring lost power due to carbon, gum and varnish deposits that accumulate in the combustion chambers of gasoline engines. These deposits are the result of normal engine use, low temperature operation and the use of some fuels. Removing these deposits helps improve fuel/air flow and overall engine performance.

Use in all 2- and 4-cycle carbureted and fuel-injected gasoline engines including cars, trucks, motorcycles, ATVs, snowmobiles, marine engines, lawn mowers, chain saws, string trimmers and snow blowers.
Safe for catalyzed engines.

Priced individually, sold @ multiples of 12

340 g (12 oz) spray can

Quicksilver Branded

FUEL STABILIZER

Add Quickstor Fuel System Treatment & Stabilizer to fuel before long-term boat storage to:
• Prevent regular and ethanol-blended fuel from breaking down and oxidizing
• Stabilize fuel for up to a year
• Prevent fuel system corrosion
• Prevent gum and varnish from forming in the fuel and settling in fuel lines and tanks, carburetors and injectors
• Keep injectors and carburetors lubricated

1 ounce treats 5 gallons - 12 ounce bottle treats 60 gallons

Use in all 2- and 4-cycle carbureted and fuel-injected gasoline engines including cars, trucks, motorcycles, ATVs, snowmobiles, marine engines, lawn mowers, chain saws, string trimmers and snow blowers. Safe for catalyzed engines.

QUICKSTOR FUEL STABILIZER



92-8M0047922

1 ounce treats 5 gallons - 12 ounce bottle treats 60 gallons

Priced individually, sold @ multiples of 12

355 mL (12 oz.) plastic bottle

Quicksilver Branded

QUICKSTOR FUEL STABILIZER



92-8M0058682

1.6ml treats 1L of fuel
946ml ounce bottle treats 1211L of fuel

Priced individually, sold @ multiples of 6

946 mL (32 oz)

Quicksilver Branded

QUICKSTOR FUEL STABILIZER



92-8M0058683

1.6ml treats 1L of fuel
3.785L bottle treats 2366L of fuel

Priced individually, sold @ multiples of 4

3.78 L (1 gallon) plastic bottle

Quicksilver Branded

QUICKSILVER GEARCASE LUBRICANT

Quicksilver outperforms automotive gear oil in marine applications because of its specialized additive package designed for marine gear cases. Continued use of this gear case lubricant will:
- Provide maximum protection against excessive wear—even in the presence of water
- Prevent corrosion and pitting
- Help extend gear life

SKU CHART

Quicksilver Gearcase Lubricant SKU Chart

Item Number	Qty per Case	Container Size	Pallet Qty	Btl Length (in)	Btl Depth (in)	Btl Height (in)	Btl Weight (lb)	Case Length (in)	Case Width (in)	Case Height (in)	Case Weight (lb)	Pallet Weight (lb)
SAE 80W90 PREMIUM GEAR LUBE FOR OUTBOARDS & JET PUMPS BELOW 75HP												
92-802844Q02	12	8 OZ TUBE										
92-858058Q01	6	QUART	468	4.2	2.375	9.25	2.083	8.9	7.7	10.1	12.5	1040
92-858059Q01	2	2.5 GAL.	72	9.1	6.8	14.5	20	9.78	14.5	14.5	40	1490
92-858007Q01	1	5 GAL.	36	12	12	14.75	39	12	12	14.75	39	1454
92-858061Q01	1	16 GAL.	9	14.25	14.25	27	136	14.25	14.25	27	136	1274
92-858062Q01	1	55 GAL.	4	23	23	34	434	23	23	34	434	1786
SAE 90 HIGH PERFORMANCE GEAR LUBE FOR OUTBOARDS, JET PUMPS & SPORT JETS ABOVE 75HP AND ALL STERNDRIVES												
92-802851Q02	12	8 OZ TUBE										
92-858064Q01	6	QUART	468	4.2	2.375	9.25	2.083	8.9	7.7	10.1	12.5	1040
92-858065Q01	2	2.5 GAL.	72	9.1	6.8	14.5	20	9.78	14.5	14.5	40	1490
92-858008Q01	1	5 GAL.	36	12	12	14.75	39	12	12	14.75	39	1454
92-858067Q01	1	16 GAL.	9	14.25	14.25	27	136	14.25	14.25	27	136	1274
92-858068Q01	1	55 GAL.	4	23	23	34	434	23	23	34	434	1786

PREMIUM GEAR LUBE - SAE 80W90

Quicksilver Premium Gear Lube is recommended in lower units for outboards below 75HP.

SAE 80W90 GEAR LUBE



92-802844Q02

Priced individually, sold @ multiples of 12
237 ml (8 fl oz) tube
Quicksilver Branded

SAE 80W90 GEAR LUBE



92-858058Q01

Priced individually, sold @ multiples of 6
946 ml (32 fl oz) plastic bottle
Quicksilver Branded

QUICKSILVER GEARCASE LUBRICANT

SAE 80W90 GEAR LUBE



92-858059Q01
Priced individually, sold @ multiples of 2
9.46 L (2.5 US gal) plastic bottle
Quicksilver Branded

SAE 80W90 GEAR LUBE



92-858007Q01
18.9 L (5 US gal) plastic pail
Quicksilver Branded

SAE 80W90 GEAR LUBE



92-858061Q01
60.5 L (16 US gal) drum
Quicksilver Branded

SAE 80W90 GEAR LUBE



92-858062Q01
208 L (55 US gal) drum
Quicksilver Branded

PREMIUM GEAR LUBE CAPACITY CHART

This gearlube capacity chart is limited to recent models and has been developed to aid in determining how much gearlube to have on hand when servicing a particular gearhousing. Changing and servicing of gearlube should always be performed in accordance with techniques and procedures as outlined in the appropriate service or owner manuals. The quantities shown here are to be regarded as reference only. Any variation from the quantities shown may indicate an incorrect model selection, the wrong service technique or a more serious problem. Contact your local dealer prior to running if this should occur.

For outboards less than 75 hp

Mercury or Quicksilver SAE 80W90 Premium Gear Lube is recommended

Brand	Model	Cycle	Model Description	Oz.	mL.
Mercury/Mariner	2.2, 2.5, 3.3	2 cycle		4.5	135
Mercury/Mariner	4, 5	2 cycle		6.8	200
Mercury/Mariner	6, 8, 9.9, 15	2 cycle		6.8	200
Mercury/Mariner	20, 25	2 cycle		8.8	260
Mercury/Mariner	30, 40	2 cycle	2 cylinder	14.9	440
Mercury/Mariner	40, 50	2 cycle	3 cylinder, std. Gearcase	14.9	440
Mercury/Mariner	60	2 cycle	Big Foot	22.5	665
Force	5	2 cycle		4.0	120
Force	9.9, 15	2 cycle		6.8	200
Force	25	2 cycle		8.8	260
Force	40, 50	2 cycle		14.9	440
Mercury/Mariner	2.5, 3.5	FourStroke		6.1	180
Mercury/Mariner	4, 5	FourStroke		6.8	200
Mercury/Mariner	8/9.9	FourStroke	MY 2004 & prior Standard gearcase	6.8	200
Mercury/Mariner	8/9.9	FourStroke	MY 2005 & newer Standard gearcase	10.8	320
Mercury/Mariner	9.9	FourStroke	MY 2004 & prior BigFoot	8.8	260
Mercury/Mariner	9.9	FourStroke	MY 2005 & newer BigFoot	12.5	370
Mercury/Mariner	15 (323cc)	FourStroke	Standard Gearcase	6.8	200
Mercury/Mariner	15 (323cc)	FourStroke	Big Foot	8.8	260
Mercury/Mariner	15 (351cc)	FourStroke		12.5	370
Mercury/Mariner	20 (351cc)	FourStroke		12.5	370
Mercury/Mariner	25	FourStroke	Big Foot, Carb	14.9	440
Mercury/Mariner	25	FourStroke	EFI	11.8	350
Mercury/Mariner	30	FourStroke	MY 2005 & prior Standard gearcase	14.9	440
Mercury/Mariner	30	FourStroke	MY 2006 & newer EFI	11.8	350
Mercury/Mariner	30	FourStroke	MY 2005 & prior Big Foot	22.5	665
Mercury/Mariner	40	FourStroke	3 cylinder, std. Gearcase	14.9	440
Mercury/Mariner	40	FourStroke	3 cylinder, Big Foot	22.5	665
Mercury/Mariner	40, 45, 50	FourStroke	4 cylinder, 935 cc, std. Gearcase	14.9	440
Mercury/Mariner	40, 45, 50	FourStroke	4 cylinder, 935 cc, Big Foot	22.5	655
Mercury/Mariner	40	FourStroke	4 cylinder, 996 cc, Big Foot	24.0	710
Mercury/Mariner	50, 60	FourStroke	4 cylinder, 996 cc, std. Gearcase	11.5	340
Mercury/Mariner	50, 60	FourStroke	4 cylinder, 996 cc, Big Foot	24.0	710

HIGH PERFORMANCE GEAR LUBE - SAE 90

Quicksilver High Performance Gear Lube is recommended for use in marine gear cases with marine engines above 75HP.

SAE 90 GEAR LUBE



92-802851Q02

Priced individually, sold @ multiples of 12

237 ml (8 fl oz) tube

Quicksilver Branded

SAE 90 GEAR LUBE



92-858064Q01

Priced individually, sold @ multiples of 6

946 ml (32 fl oz) plastic bottle

Quicksilver Branded

SAE 90 GEAR LUBE QUART & GEAR LUBE PUMP



91-802891Q05

Gear lube pump and a quart of Hi Performance gear lube conveniently packaged together. Use the pump to replace your gear case oil with ease. Fits all quart and liter bottles.

Gear lube pump: Fits all MerCruiser sterndrives and Mercury/Mariner outboards (except models of Japanese origin) with a 3/8"-16 drain/fill screw. Adapter available

Priced individually, sold @ multiples of 6

Quicksilver Branded, Clamshell Package Point of Sale Packaged.

SAE 90 GEAR LUBE



92-858065Q01

Priced individually, sold @ multiples of 2

9.46 L (2.5 US gal) plastic bottle

Quicksilver Branded

SAE 90 GEAR LUBE



92-858008Q01

18.9 L (5 US gal) plastic pail

Quicksilver Branded

SAE 90 GEAR LUBE



92-858067Q01

60.5 L (16 US gal) drum

Quicksilver Branded

SAE90 GEAR LUBE



92-858068Q01

208 L (55 US gal) drum

Quicksilver Branded

QUICKSILVER GEARCASE LUBRICANT

HIGH PERFORMANCE GEAR LUBE CAPACITY CHART

This gear lube capacity chart is limited to recent models and has been developed to aid in determining how much gearlube to have on hand when servicing a particular gearhousing. Changing and servicing of gearlube should always be performed in accordance with techniques and procedures as outlined in the appropriate service or owner manuals. The quantities shown here are to be regarded as reference only. Any variation from the quantities shown may indicate an incorrect model selection, the wrong service technique or a more serious problem. Contact your local dealer prior to running if this should occur.

For outboards 75 hp and up and all sterndrives

Mercury or Quicksilver SAE 90 High Performance Gear Lube is recommended

Brand	Model	Cycle	Model Description	Oz.	mL.
Mercury/Mariner	75, 90	2 cycle	3 cylinder	22.5	665
Mercury/Mariner	100, 115, 125	2 cycle	4 cylinder	22.5	665
Mercury/Mariner	115	2 cycle	3 cylinder Optimax	22.5	665
Mercury/Mariner	135, 150	2 cycle	2.0L	22.5	665
Mercury/Mariner	150, 175, 200	2 cycle	2.5L Carb/EFI/Optimax	22.5	665
Mercury/Mariner	200, 225, 250	2 cycle	3.0L Carb/EFI/Optimax	27.0	798
Force	75	2 cycle		12.0	355
Force	90, 120	2 cycle		22.5	655
Mercury/Mariner	75-90	FourStroke	S/N 1B366822 & below	22.5	665
Mercury/Mariner	75-90	FourStroke	S/N 1B366823 & above	24.0	710
Mercury/Mariner	115	FourStroke		24.0	710
Mercury/Mariner	135/150/175	FourStroke	Verado (RH rotation)	32.8	970
Mercury/Mariner	150 EFI	FourStroke	RH rotation	26.4	780
Mercury/Mariner	200	FourStroke	Verado (RH rotation)	32.8	970
Mercury/Mariner	225 EFI	FourStroke	Standard gearcase	39.0	1.15L
Mercury/Mariner	225/250/275/300	FourStroke	Verado (RH rotation)		
			4.8 Diameter	32.8	970
			5.44 Dia. Sportmaster	20.9	620
			5.44 Dia. HD	17.2	510
			5.44 non-HD	28.7	850
MerCruiser	Alpha One Gen II	4 cycle	without Gear lube Monitor	1.22 US Quarts	1.16L
MerCruiser	Alpha One Gen II	4 cycle	with Round Gear lube Monitor	2.0 US Quarts	1.9L
MerCruiser	Alpha One Gen II	4 cycle	with Rectangular Gear lube Monitor	1.75 US Quarts	1.66L
MerCruiser	Bravo One	4 cycle	without Gear lube Monitor	2.0 US Quarts	1.9L
MerCruiser	Bravo One	4 cycle	with Round Gear lube Monitor	3.25 US Quarts	3.07L
MerCruiser	Bravo One	4 cycle	with Rectangular Gear lube Monitor	2.75 US Quarts	2.6L
MerCruiser	Bravo Two	4 cycle	without Gear lube Monitor	2.5 US Quarts	2.4L
MerCruiser	Bravo Two	4 cycle	with Round Gear lube Monitor	3.75 US Quarts	3.55L
MerCruiser	Bravo Two	4 cycle	with Rectangular Gear lube Monitor	3.25 US Quarts	3.07L
MerCruiser	Bravo Three	4 cycle	without Gear lube Monitor	2.0 US Quarts	1.9L
MerCruiser	Bravo Three	4 cycle	with Rectangular Gear lube Monitor	3.0 US Quarts	2.84L
MerCruiser	Blackhawk	4 cycle	without Gear lube Monitor	1.75 US Quarts	1.66L
MerCruiser	Blackhawk	4 cycle	with Rectangular Gear lube Monitor	2.25 US Quarts	2.1L

EXTREME PERFORMANCE GEAR LUBE - SAE 90

Quicksilver Extreme Performance Gear Lube was designed for outboard and sterndrive racing applications. This gear lube provides maximum protection against:
• Water intrusion – advanced emulsifiers protect gears if water enters the gear housing
•Wear – tackifiers and pressure additives improve oil film adhesion and protect against excessive wear
•Horsepower loss – prevents horsepower loss and won't break down when gears reach high temperatures

Quicksilver recommends the gear lube be changed at least once per year (prior to storage) or every 100 hours of operation. See owner's manual for specific recommendations.
Recommended for use in high-performance gearcases used in marine, powersports, and motorsports applications.

SAE 85W90 EXTREME PERFORMANCE GEAR OIL



92-8M0111677
Priced individually, sold @ multiples of 6
946 mL (32 fl oz) bottle
Quicksilver Branded

SAE 85W90 EXTREME PERFORMANCE GEAR OIL



92-8M0111679
Priced individually, sold @ multiples of 3
3.78 L (1 US Gal) bottle
Quicksilver Branded

SAE 85W90 EXTREME PERFORMANCE GEAR OIL



92-8M0111680
208 L (55 US gal) bottle
Quicksilver Branded

QUICKSILVER GEARCASE LUBRICANT ACCESSORIES

GEAR LUBE PUMP



91-8M0072133

Easily replace your lower unit oil with this pump. Fits all quart and liter bottles.

Fits any outboard or stern drive with a 3/8"-16 drain plug. Use adapter (included) for gear cases with an M8x1.25 drain plug.

Priced individually, sold @ multiples of 6

Quicksilver Branded, Clamshell Package Point of Sale Packaged.

GEAR LUBE PUMP



91-850730Q 1

For all 2-1/2 US gal (10 L) plastic oil bottles. May be used with any outboard which uses a 3/8"-16 drain/fill screw.

Fits all MerCruiser sterndrives and Mercury/Mariner Outboards except those models of Japanese origin.

Quicksilver Branded, Clamshell Package Point of Sale Packaged.

GEAR LUBE PUMP ADAPTER



91-883704Q03

Adapts our 3/8-16 threaded quart, liter and 2-1/2 gallon gearlube pumps for filling the gearcase.

Fits Mercury/Mariner 4/5 HP (1987 and newer), 4/5/6 HP FourStroke, 225 EFI FourStroke, MY2005 & newer 8/9.9 HP FourStroke, MY2006 & newer 25/30 EFI FourStroke, the 15/20 HP FourStroke (351cc), all Mercury/Mariner outboards of Japanese origin and all Nissan/Yamaha/Tohatsu/Honda outboards with an 8x1.25 metric threaded gear lube fill hole.

Priced individually, sold @ multiples of 2

Quicksilver Branded, Clamshell Package Point of Sale Packaged.

QUICKSILVER GREASES

Quicksilver Grease Product Line Simplified

Quicksilver greases have gone through a makeover. The product line has been simplified to eliminate confusion about which grease to use in what application. The line has been reduced from six types of grease to three. Below is a summary of the consolidation:

2-4-C Marine Grease – No change
Needle Bearing Assembly Grease – Now called Assembly Grease. The formula has not changed but the packaging has. Instead of 8 oz tubes, the product now comes in 1lb tubs.
Special 101 – Replaced by 2-4-C Marine Grease
U-Joint and Gimbal Bearing Lubricant – Replaced by Extreme Grease
Anti-Corrosion Grease - Replaced by Extreme Grease
Engine Coupler/Spline Grease - Replaced by Extreme Grease

MARINE GREASE

Quicksilver 2-4-C Marine Grease with PTFE is a high quality, extremely versatile lithium-based, NLGI 2 grease that won't break down when mixed with water. It also has:
• Excellent resistance to oxidation and degradation
• Extreme pressure additives to withstand friction in a wide variety of operations and temperatures
Replaces Quicksilver Special 101 Lubricant part number 92-802865Q02

For use in the following marine applications:
• Steering systems/cable linkages
• Throttle and shift cables and linkages
• Remote controls
• Prop shafts
• Swivel pins
• Tilt lock mechanisms/tilt tube
• Hinge pins
• Boat trailer wheel bearings

2-4-C MARINE LUBRICANT



92-802861Q 1
Priced individually, sold @ multiples of 10
3 - 85 g tubes (3 - 3 oz tubes) cartridge
Quicksilver Branded, Clamshell Package Point of Sale Packaged.

2-4-C MARINE LUBRICANT & CARTRIDGE GUN



91- 74057Q 5
Cartridge gun and one 3 oz.(85 g) cartridge.
Priced individually, sold @ multiples of 4
Quicksilver Branded, Clamshell Package Point of Sale Packaged.

2-4-C MARINE LUBRICANT



92-802859Q 1
Priced individually, sold @ multiples of 12
227 g (8 oz) tube
Quicksilver Branded

2-4-C MARINE LUBRICANT



92-802863Q 1
Fits standard 14 oz grease guns
Priced individually, sold @ multiples of 4
397 g (14 oz) cartridge
Quicksilver Branded

MULTI-PURPOSE GREASE

Quicksilver Extreme Grease is a formulated for high-temperature and high-load applications.
• Calcium sulfonate-based NLGI 2 grease
• Meets GC-LB requirements
• Excellent rust and corrosion protection
• Formulated for high-temperature and high load applications
• 100% compatible with lithium-based greases

Replaces:
• Quicksilver Engine Coupler Spline Grease part number 92-802869Q1
• Quicksilver U-Joint & Gimbal Bearing Lubricant part numbers 92-802870Q1 and 92-802871Q1
• Quicksilver Anti-Corrosion Grease part number 92-802867Q1

For use in the following applications for automobiles, light trucks, campers, marine engines, utility trailers, ATV/UTVs, motorcycles and snowmobiles:
• Steering systems/cable linkages
• Throttle and shift cables and linkages
• Drive shaft splines
• Gimbal bearings
• U-Joints
• Suspension systems
• Chassis
• Ball joints
• Disc brakes and ABS applications
• Trailer wheel bearings

See the Non-Marine Application Grease Chart for more information.

EXTREME GREASE



92-8M0071837
Priced individually, sold @ multiples of 10
85 g (3 oz) 3-pack cartridges
Quicksilver Branded, Peg Display Product Point of Sale Packaged.

EXTREME GREASE



92-8M0071838
Priced individually, sold @ multiples of 6
227 g (8 oz) tube
Quicksilver Branded

EXTREME GREASE



92-8M0071841
Priced individually, sold @ multiples of 4
(14 oz) cartridge
Quicksilver Branded

ENGINE ASSEMBLY GREASE

ASSEMBLY GREASE



92-8M0071836
Use to protect newly repaired or rebuilt engines. Will not contaminate engine lubricants and dissolves completely after initial engine startup.

Recommended for engine components that are susceptible to wear at startup such as:
* Bearings
* Camshaft lobes
* Lifters
* Rocker arms
* Wrist pins

For use in the assembly and repair of two and four stroke engines.
Priced individually, sold @ multiples of 4
(16 oz)
Quicksilver Branded

GREASE APPLICATION CHARTS

Marine Application Grease Chart

This chart is a general maintenance guide for applying either 2-4-C Marine Grease or Extreme Grease in marine applications. Maintenance schedules for specific models are included in each engine's owner's manual and should be followed as such.

	Outboards	Sterndrives	Freshwater Lubrication Intervals	Saltwater Lubrication Intervals
Steering systems/ cable, linkages	2-4-C	2-4-C	100 hrs./ at least once a year	50 hrs./at least once a year
Throttle and shift cables and linkages	2-4-C	2-4-C	100 hrs.	50 hrs.
Remote controls	2-4-C	2-4-C	100 hrs./or once a year	50 hrs./or once a year
Prop shaft	2-4-C	2-4-C	100 hrs./120 days	50 hrs./60 days
Swivel pins	2-4-C	2-4-C	100 hrs./120 days	50 hrs./60 days
Tilt lock mechanism/ tilt tube	2-4-C		100 days	50 days
Hinge pins		2-4-C	100 hrs./or once a year	50 hrs./or once a year

	Outboards	Sterndrives	Freshwater Lubrication Intervals	Saltwater Lubrication Intervals
Drive shaft splines (engine couplers)	Extreme	Extreme	100 hrs./or once a year	50 hrs./or once a year
Gimbal bearings		Extreme	100 hrs./or once a year	50 hrs./or once a year
U-Joint (1)		Extreme	100 hrs./or once a year	50 hrs./or once a year
(1) 1993 and newer Alpha One models have a Perma-lube U-joint which requires no lubrication.				

Non-Marine Application Grease Chart

This chart is a general maintenance guide for applying Extreme Grease in non-marine applications. Maintenance schedules for specific equipment and models are included in your owner's manual and should be followed as such.

Application	ATV/UTV/Motorcycle	Snowmobile	Auto
Steering systems/cable, linkages	X	X	X
Throttle and shift cables and linkages	X	X	X
Drive shaft splines (engine couplers)			X
U Joint	X		X
Suspension systems	X	X	X
Chassis	X		X
Ball joints			X
Disc brakes and ABS apps	X	X	X

QUICKSILVER PAINTS AND FINISH

FORCE COLORS

FORCE BLACK PAINT



92-802878Q32

Priced individually, sold @ multiples of 6

340 g (12 oz) spray can

Quicksilver Branded

GRAPHITE GRAY PAINT



92-802878Q30

For all Force and Tracker outboards with dark gray hoods (1997 and older)

Priced individually, sold @ multiples of 6

340 g (12 oz) spray can

Quicksilver Branded

MARINER COLORS

MARINER GRAY PAINT



92-802878Q16

For all 1984 and older Mariner outboards.

Priced individually, sold @ multiples of 6

340 g (12 oz) spray can

Quicksilver Branded

MARINER LIGHT GRAY PAINT



92-802878Q14

For 1985 and newer Mariner outboards (except 1994 and newer top cowls, 1994 and newer lower cowls on 8/9.9/15, 75 hp and larger models and 1997 3.0L Offshore models) also for Tracker outboards with silver hoods.

Priced individually, sold @ multiples of 6

340 g (12 oz) spray can

Quicksilver Branded

MARINER NICKEL GRAY PAINT



92-802878Q10

For Mariner outboard lower cowls on 8/9.9/15, 75 hp and larger models - 1994 and newer (except 1997 3.0L Offshore models) and Tracker outboards with silver hoods.

Priced individually, sold @ multiples of 6

340 g (12 oz) spray can

Quicksilver Branded

MARINER SILVER PAINT



92-802878Q12

For Mariner outboard top cowls - 1994 and newer (except 1997 3.0L Offshore models) and Tracker outboards with silver hoods.

Priced individually, sold @ multiples of 6

340 g (12 oz) spray can

Quicksilver Branded

MERCURY COLORS

CAMOUFLAGE TAN PAINT



92-802878Q39

Special low-gloss paint to match the Advantage MAX-4 HD® graphics on the Mercury FLYWAY outboards.
Recommended for use on Mercury FLYWAY 25 EFI outboards
Priced individually, sold @ multiples of 6
340 g (12 oz) spray can
Quicksilver Branded

PHANTOM BLACK PAINT



92-802878Q 1

For all Mercury outboards and MCM/MIE engines and drives.
Priced individually, sold @ multiples of 6
340 g (12 oz) spray can
Quicksilver Branded

PHANTOM BLACK PAINT



92-802878Q 2

For all Mercury outboards and MCM/MIE engines and drives.
Priced individually, sold @ multiples of 6
18 mL (.6 fl oz) bottle with applicator brush
Quicksilver Branded

VERADO SILVER



92-802878Q21

Priced individually, sold @ multiples of 6
18mL (.6 fl oz) bottle with applicator brush
Quicksilver Branded, Box Point of Sale Packaged.

VERADO SILVER



92-802878Q20

Priced individually, sold @ multiples of 6
340 g (12 oz) can
Quicksilver Branded

PROPELLER PAINT

PHANTOM BLACK PAINT



92-802878Q 1

For all Mercury outboards and MCM/MIE engines and drives.
Priced individually, sold @ multiples of 6
340 g (12 oz) spray can
Quicksilver Branded

EDP PROPELLER BLACK PAINT



92-802878Q50
Priced individually, sold @ multiples of 6
340 g (12 oz) spray can
Quicksilver Branded

SURFACE PREPARATION AND FINISH

LIGHT GRAY PRIMER



92-802878Q52
Priced individually, sold @ multiples of 6
340 g (12 oz) spray can
Quicksilver Branded

CLEAR COAT



92-802878Q53
For cowls on Mercury, Mariner and Force outboards.
Priced individually, sold @ multiples of 6
340 g (12 oz) spray can
Quicksilver Branded

LEVELER



92-802878Q54
Used to smooth the finish of painted objects.
Priced individually, sold @ multiples of 6
340 g (12 oz) spray can
Quicksilver Branded

QUICKSILVER STEERING FLUID

POWER TRIM AND STEERING FLUID



92-858074Q01

A universal hydraulic fluid designed to mix with all hydraulic fluids, protect seals and hoses, and prevent foaming, oxidation and corrosion.

Recommended for all outboard and sterndrive applications except electric power steering systems (use Synthetic Power Steering Fluid SAE 0W30) and non-power hydraulic steering systems (use Hydraulic Helm Steering Fluid)

Recommended for all applications that require a Type F Transmission Fluid

Priced individually, sold @ multiples of 12

237 ml (8 fl oz) plastic bottle

Quicksilver Branded

POWER TRIM AND STEERING FLUID



92-858075Q01

A universal hydraulic fluid designed to mix with all hydraulic fluids, protect seals and hoses, and prevent foaming, oxidation and corrosion.

Recommended for all outboard and sterndrive applications except electric power steering systems (use Synthetic Power Steering Fluid SAE 0W30) and non-power hydraulic steering systems (use Hydraulic Helm Steering Fluid)

Recommended for all applications that require a Type F Transmission Fluid

Priced individually, sold @ multiples of 6

946 ml (32 fl oz) plastic bottle

Quicksilver Branded

HYDRAULIC HELM STEERING FLUID



92-858078Q01

Meets H5606G military specifications

For use in non-power hydraulic steering systems such as, MerCruiser compact hydraulic helm steering systems and bolt-on steering systems such as SeaStar® by Teleflex®, Inc.

Priced individually, sold @ multiples of 6

946 mL (32 fl oz) plastic bottle

Quicksilver Branded

SHOP PRODUCTS FOR ENGINE ASSEMBLY AND MAINTENANCE

ADHESIVES AND SEALANTS

LIQUID NEOPRENE



92- 25711 3

Insulate and seal electrical connections.
237 ml (8 fl oz.) can

PERFECT SEAL SEALING COMPOUND



92- 34227Q02

Used in general sealant applications.
473 ml (16 fl oz) can
Quicksilver Branded

BELLOWS ADHESIVE



92- 86166Q 1

Securely seals universal and exhaust bellows.
For all MCM sterndrives.
42.5 g (1.5 oz) tube
Quicksilver Branded, Box Point of Sale Packaged.

HEAT TRANSFER COMPOUND



92-8M0082339

Helps transfer heat from the electric fuel pump to the mounting plate and cooler on all MCM cool fuel systems, also helps transfer heat from ignition modules to the distributor bodies.
9.5 g (.33 oz) tube

LOCTITE 5512 ADHESIVE SEALANT



92-858006K02

High elongation and tensile strength gives this product the best of both worlds: good adhesion to many substrates and good impact and peel resistance
Recommended for use as adapter plate adhesive
300 ml (10.1 oz) tube

LOCTITE 409 SUPER BONDER



92-8M0071552

Clear, general-purpose gel instant adhesive. Fixture time in 75 seconds and full cure in 24 hours.
(3 g) tube

LOCTITE 680 RETAINING COMPOUND



92-809833

Retains gears, pulleys, flywheels, rotors and shafts. Excellent for replacement of bearings in worn housings or keys in worn keyways.

10 ml (.34 fl oz) plastic bottle

LOCTITE HI-TACK STICK - GASKET DRESSING



92-8M0061870

Wax-like stick formulated to work like Loctite Hi-Tack Liquid, but less messy, low odor and solvent-free. Sets quickly to a very tacky film and seals and holds the heaviest gaskets in place. Resists gasoline, oil, and common shop fluids.

19 g (.67 oz) tube

LOCTITE QUICKTITE SUPER GLUE GEL



92-898101387

A premium super glue that is faster acting, provides a stronger, longer lasting bond and works on more materials than regular super glues including porous and non-porous materials. The tube is self-piercing with a no-clog nozzle. The locking cap collar prevents leaks and drying out. The superior applicator allows for continuous flow or drop control and this means less waste and less mess. The no-run gel formula stays put for no-mess and precise application even on vertical surfaces.

4 g (.14 oz) tube

LOCTITE INSULATING AND SEALING WRAP



92-8M0064960

Non-sticky, self fusing, multipurpose wrap

This innovative wrap contains no adhesive. When stretched and wrapped around a surface, it fuses to itself and instantly seals and protects the area against air leakage, corrosion and scratches. In addition, its tapered edges provide a uniform wrap thickness. It develops maximum strength in 24 hours.

Withstands extreme conditions:
- -65°F to 500°F (-54°C to 260°C)
- UV resistant
- Saltwater, fuels and acid resistant
- Tensile strength up to 700 PSI
- Dielectric strength up to 400 VPM
- Red

2.5 cm x 304.8 cm (1 in x 10 ft)

LOCTITE INSULATING AND SEALING WRAP



92-8M0078098

Non-sticky, self fusing, multipurpose wrap

This innovative wrap contains no adhesive. When stretched and wrapped around a surface, it fuses to itself and instantly seals and protects the area against air leakage, corrosion and scratches. In addition, its tapered edges provide a uniform wrap thickness. It develops maximum strength in 24 hours.

Withstands extreme conditions:
- -65°F to 500°F (-54°C to 260°C)
- UV resistant
- Saltwater, fuels and acid resistant
- Tensile strength up to 700 PSI
- Dielectric strength up to 400 VPM
- Black

2.5 cm x 304.8 cm (1 in x 10 ft)

BEARING MOUNT

LOCTITE BEARING MOUNT STICK



92-898101384

A revolutionary method to bond non-threaded, cylindrical metal assemblies, this unique wax-like stick works just like Loctite Bearing Mount liquids to secure parts, seal joints, and prevent corrosion. Replaces clamp rings, setscrews and snap rings.

9 g (.32 oz) tube

GASKETING

LOCTITE 510 GASKET ELIMINATOR FLANGE SEALANT



92-809828002

Has a temperature range to 400 F with excellent solvent and chemical resistance. Makes or dresses gaskets in rigid assemblies. Eliminates gasket compression set.

250 ml (8.45 oz) tube

LOCTITE® 518™ GASKET ELIMINATOR® FLANGE SEALANT



92- 12564 2

Forms a flexible, solvent-resistant seal that will not tear or decay. Seals to 300 F (149 C) and fills gaps to .05 in (1.27mm). Can be used on flexible metal assemblies, including aluminum surfaces. Easy disassembly for cleaning. Ideal for on-the-spot and emergency repairs or when a conventional gasket is out of stock.

Gaskets and sealing: Suited best for small gap applications and rigid metal-to-metal assemblies

25 ml (0.8 oz) cartridge

LOCTITE 587 ULTRA BLUE RTV SILICONE SEALANT



92-809825

Low odor, non-corrosive, low volatility sealant and high temperature gasket compound. Makes reliable form-in-place gaskets. Temp. range is 75 deg.F (24 deg.C) to 500 deg.F (260 deg.C)

85 g (3 oz) tube

LOCTITE 587 BLUE HIGH PERFORMANCE RTV SILICONE



92-809825001

A high-performance, RTV silicone developed to meet today's technology. Outstanding oil resistance use where superior performance and oil resistance is required. Non-corrosive and low odor. and meets automotive volatility specifications. Temperature range is 75 to 500 degrees F (-59- to 260-degree C). New Power Can dispenser provides: More accurate dispensing of constant, steady silicone beads. Ergonomic and easy to use fingertip trigger. Silicone product and dispense system in one, eliminating the need for a caulking gun. Attached nozzles - no more searching for displaced nozzles. Non flammable products. Propellants used are VOC free.

190 ml (6.42 fl oz) can

LOCTITE 5900 BLACK RTV SILICONE SEALANT



92-809826

Slightly heavier body than 587 Blue, which helps resist blowout during assembly. Makes reliable form-in-place gaskets. Temp. range is 75 deg.F (24 deg.C) to 625 deg.F (329 deg.C)

371 g (13 oz) tube

LOCTITE FORM-A-GASKET SEALANT #2



92-809834

Slow drying, non-hardening sealant designed for sealing cut gaskets and stamped parts. Allows for easy disassembly if required. Temperature range -65 deg. F to 400 deg. F; resists common shop fluids and fuels.

85 g (3 oz) tube

LOCTITE READY GASKET



92-898101388

Makes high-performance, leak-proof gaskets in one minute equipment can be returned to service immediately. Elastomeric rubber gasket technology blowout-resistant and sensor-safe. Outperforms pre-cut gaskets. Resists ATF, coolant, oil, and other shop fluids. Protects against leaks caused by vibration and thermal expansion. Temperature range: 75 to 450 degrees F (60 to 232 degrees C) continuous, 500 degrees F (260 degrees C) intermittent. New Power Can dispenser provides: More accurate dispensing of constant, steady silicone beads. Ergonomic and easy to use fingertip trigger. Silicone product and dispense system in one, eliminating the need for a caulking gun. Attached nozzles - no more searching for displaced nozzles. Non flammable products. Propellants used are VOC free.

190 ml (6.42 fl oz) can

THREEBOND LIQUID GASKET



92-858005K02

This silicone-based liquid gasket fills gaps on a flange surface and thus completely prevent leaks. When cured, it forms an excellent rubber-like elastic body offering excellent resistance to vibration and shock. It also has an excellent resistance to heat and effectively seals joints that are subjected to high temperature.

Recommended for sealing powerheads and adapter plate gaskets

75 g (2.65 oz) tube

LUBRICANTS

LOCTITE COPPER ANTI-SEIZE STICK



92-898101385

This copper anti-seize lubricant provides a shield against high temperature seizing and galling. Studs, bolts, flanges and other mated parts can be removed easily in typical dry service temperatures up to 1800 F (982 C). Can be used on copper, brass, cast iron, all steel alloys including stainless steel, all plastics and all non-metallic gasketing materials.

20 g (.70 oz) tube

LOCTITE SILVER ANTI-SEIZE STICK



92-898101389

A heavy-duty temperature-resistant, petroleum-based lubricant compound fortified with graphite and metallic flake. Will not evaporate or harden in extreme cold or heat. Use during assembly to prevent seizing, galling, and corrosion, For use in assemblies up to 1600 F (871 C).

20 g (.70 oz) tube

LOCTITE SILVER ANTI-SEIZE AEROSOL



92-898101390

Heavy duty, temperature resistant, petroleum-based lubricant compound fortified with graphite and metallic flake. Inert will not evaporate or harden in extreme cold or heat. Prevents seizing, galling and corrosion. Protects metal parts to 1600 F/ 871 C.

355 ml (12 oz) spray can

SILICONE DIELECTRIC COMPOUND



92-823506 1

Protects and displaces moisture from spark plug boots, coils, and electrical switches.

227 g (8 oz) tube

Quicksilver Branded

INSULATING COMPOUND



92- 41669 1

1 oz tube

Quicksilver Branded

SPECIALTY

FUEL INJECTION PRO INJECT-R CLEANER



92-8M0062765

This fluid restores injectors to their original spray pattern, helps prevent recurring problems, and reduces intake and port deposits. Used in canister-type cleaning devices.

Note: Not for use as a fuel additive; do not pour into fuel tank.

For professional use only. Use in Mercury pressurized injector cleaner tool 91-898263A01. Consult Instruction sheet (comes with tool) 90-898266 for proper use.

Priced individually, sold @ multiples of 12

473 mL (16 fl oz) can

FUEL INJECTION CLEANER TOOL



91-898263A01

• Connects directly to your shop air supply. When used with recommended solvent, will clean injectors more effectively than aerosol methods.
• Includes gauge, hose, instructions, and Tools & Techniques manual.

SURFACE PREPARATION

LOCTITE PRIMER N



92-809824

Excellent general purpose surface preparation and curing catalyst. Reduces fixture time for most sealants to 5 to 30 minutes; full cure is 24 hours. Used with locking, retaining, pipe and gasketing compounds.

129 g (4.5 oz) spray can

LOCTITE GASKET REMOVER



92-809828 1

Removes baked-on gaskets, gasket cements, form-in-place gaskets, carbon deposits, oil, grease and paint. Use extreme caution around painted surfaces. Non-corrosive to aluminum.

Priced individually, sold @ multiples of 10

532 ml (18 fl oz.) spray can

LOCTITE ODC-FREE CLEANER & DEGREASER



92-809827Q01

Removes grease, oil, lubrication fluids, metal cuttings, and filings from parts, equipment and machinery.

Use as a spray or in immersion cleaning processes, at room temperature or heated. Recommended as a final pre-assembly cleaning treatment for all surfaces bonded with adhesives.

Priced individually, sold @ multiples of 12

444 ml (15 oz) spray can

THREAD TREATMENT

LOCTITE® 222MS® THREADLOCKER



92-809818

Ideal for fastener diameters of 1/4 in. (6mm) and smaller, long engagement length fasteners and components requiring occasional adjustment.

Threadlocking: Best suited for metals that rust and the parts are not pre-assembled.
Low strength formula for easy removal.

10 ml (.3 oz) plastic bottle

LOCTITE 242 - MEDIUM STRENGTH THREAD LOCKER



92-809821

Medium strength for general purpose. Ideal for all nut and bolt combinations. Used where future disassembly or adjustment is possible.

10 ml (.34 fl oz) plastic bottle

LOCTITE® 243®



92-8M0064958

Works on all metals, including passive substrates (e.g. stainless steel, aluminum, plated surfaces)

Proven to tolerate slight contaminations of industrial oils, e.g. engine oils, corrosion prevention oils and cutting fluids

Prevents loosening on vibrating parts, e.g. pumps, gear boxes, or presses

Permits dissassembly with hand tools for servicing
Threadlocking: Best suited for metals that rust and the parts are not pre-assembled.

Medium strength
6 ml tube

LOCTITE® 243®



92-8M0064961

Works on all metals, including passive substrates (e.g. stainless steel, aluminum, plated surfaces)

Proven to tolerate slight contaminations of industrial oils, e.g. engine oils, corrosion prevention oils and cutting fluids

Prevents loosening on vibrating parts, e.g. pumps, gear boxes, or presses

Permits dissassembly with hand tools for servicing
Threadlocking: Best suited for metals that rust and the parts are not pre-assembled.

Medium strength
36 ml bottle

LOCTITE® QUICKTAPE 249®



92-8M0064962

Medium strength threadlocker in a tape form. It provides a clean, economical and controlled application. In addition, it can be pre-applied for later assembly. Comes in a toolbox-friendly form - no mess, no waste.

Medium strength

1.27 cm x 60.96 cm (.5 in x 24 in)

LOCTITE® 271™ THREADLOCKER



92- 95812

High strength formula for permanent assemblies.

Threadlocking: Best suited for metals that rust and the parts are not pre-assembled

.5 ml plastic bottle

LOCTITE 271- HIGH STRENGTH THREAD LOCKER



92-809819

Used in extreme duty applications where permanent lock is critical.

10 ml (.34 fl oz) plastic bottle

LOCTITE 271- HIGH STRENGTH THREAD LOCKER



92-809820

Used in extreme duty applications where permanent lock is critical.

50 ml (1.69 fl oz) plastic bottle

LOCTITE 567 PST THREAD SEALANT



92-809822001

Withstands temperatures to 400 F with excellent solvent resistance. Locks and seals tapered pipe threads and fittings, including high pressure applications. Disassembles with hand tools

6 ml (0.20 oz) tube

LOCTITE 567 PST PIPE SEALANT



92-809822

Excellent high pressure and high temperature pipe and fitting sealant. Eliminates galling of stainless steel during assembly. For any threaded fitting/sensor in water or oil.

50 ml (1.69 fl oz) tube

LOCTITE BLUE THREADLOCKER STICK



92-809818001

A medium strength anaerobic threadlocker in a wax-like formula conveniently packaged in a self-feeding stick applicator. This patented new applicator offers great flexibility for tough applications, especially overhead and on components that cannot be moved. Locks and seals threaded fasteners. Removable with hand tools.

19 g (.67 oz) tube

LOCTITE RED THREADLOCKER STICK



92-809818002

A high strength anaerobic threadlocker in a wax-like formula conveniently packaged in a self-feeding stick applicator. Well suited for heavy-duty applications where resistance to heavy shock, vibration, and stress levels is required. Localized heating and hand tools are required to separate parts.

19 g (.67 oz) tube

LOCTITE PST THREAD SEALANT STICK



92-809820001

A single component, semi-solid anaerobic pipe sealant compound. The self-feeding applicator stick facilitates application of the material where a conventional liquid or paste would be difficult to use. Rapidly cures to provide immediate low-pressure sealing. The controlled lubricity prevents galling and protects mated threaded areas from rust and corrosion and eases disassembly. Recommended for sealing metal tapered pipe threads and fittings.

19 g (.67 oz) tube

LOCTITE STICK ASSORTMENT PACK



92-898101391

One of the most significant innovations in the 50-year history of Henkel Corporation SOLID formula Loctite Thread Treatment Sticks. Now conveniently packaged in a kit designed to give you five products in one part number. Upside down, right side up, or any angle in between, these Sticks deliver! Kit includes one (1) each of the Red & Blue Threadlocker Sticks, Silver & Copper Anti-Seize Sticks and a PST Thread Sealant Stick.

19g (.67 oz) tube

SHOP TOOLS AND ACCESSORIES

BARREL PUMP

BARREL PUMP



91-850438 1

Professional barrel pump with non-drip spout, 360 degree swivel handle and telescopic tube. Delivers approximately 10 oz. per stroke, equipped with standard 2" bung assembly.

Adjusts to fit 15 to 55 gallon drums.

BARREL PUMP



91-878373

Heavy duty barrel pump of rugged die cast and steel assembly, standard 2" bung assembly and discharge spout threads which can fit a garden hose fitting. Long lasting Buna-N seals for superior suction.

Telescoping pick-up tube accommodates varying barrel sizes.

BARREL PUMP



91-878375

Aluminum rotary hand pump includes bung adapter, 4 ft. polyethylene discharge hose and two piece steel suction pipe.

For use with gasoline, diesel and similar light petroleum products including 2 and 4 cycle oils.

CRANKCASE OIL PUMP AND ADAPTER

CRANKCASE OIL PUMP



802889A 1

8/9.9 4-stroke outboards require additional adapter 828369

Fits all MCM/MIE engines with threaded fitting on dipstick tube, and Mercury/ Mariner 8/9.9 (4-stroke) outboards.

Mercury Branded, Hanging Box Point of Sale Packaged.

OIL DRAIN PUMP



802889Q 1

8/9.9 4-stroke outboards require additional adapter 828369

Fits all MCM/MIE engines with threaded fitting on dipstick tube, and Mercury/ Mariner 8/9.9 FourStroke outboards MY2004 and prior.

Quicksilver Branded, Hanging Box Point of Sale Packaged.

OIL PUMP EXTRACTION TUBE



32-859717A 2

.375 in O.D. tube, 19.5 in. long

Connects to the crankcase oil pump for use on the Zeus drive and various Mercury/ Mariner FourStroke outboards.

ADAPTER



828369

Adapts the standard threaded style MerCruiser crankcase pump for use on the Mercury/Mariner 8/9.9 hp. FourStroke outboards (MY2004 & prior) and the 15hp. FourStroke outboard (323cc).

OIL PUMP ADAPTER HOSE



32-863642

Fits MCM/MIE D1.7L DTI diesel engines.

GREASE GUNS

GREASE GUN



91- 37299A 2

Pistol grip gun

for use with 8 oz.(227 g) tubes

Priced individually, sold @ multiples of 4

Mercury Branded, Clamshell Package Point of Sale Packaged.

GREASE GUN



91- 30500

Plunger type gun

for use with 8 oz.(227 g) tubes

GREASE GUN



91- 74057A 6

Cartridge gun.

for 3 oz.(85 g) cartridges

Mercury Branded, Clamshell Package Point of Sale Packaged.

OIL FILTER WRENCHES

OIL FILTER WRENCH



91-802653K02

This is a formed metal tool for strength and durability.

Fits replaceable screw-on type canister oil filters wherever found on current Mercury/Mariner FourStroke outboards 9.9 thru 60 hp., and also the 75-115 hp. s/n 1B366822 & below.

Priced individually, sold @ multiples of 2

Mercury Branded, Clamshell Package Point of Sale Packaged.

91-802653Q02

This is a formed metal tool for strength and durability.

Fits replaceable screw-on type canister oil filters wherever found on current Mercury/Mariner FourStroke outboards 9.9 thru 60 hp., the 75-115 hp. s/n 1B366822 & below, and the 75-115 hp. s/n 2B094996 and above..

Priced individually, sold @ multiples of 2

Quicksilver Branded, Clamshell Package Point of Sale Packaged.

OIL FILTER WRENCH



91-889277

Made of metal. Requires a 3/8" drive.

Fits the Quicksilver 35-822626Q15 screw-on type canister oil filter found on the V-225 hp. FourStroke outboard and the new 877767__ & 877769__ series filters for the 135-300 Verado.

OIL FILTER WRENCH



91-889277002

Made of metal. Requires a 3/8" drive.

Fits the Mercury 35-822626T 7 screw-on type canister oil filter found on the V-225 hp. FourStroke outboard.

OIL FILTER WRENCH



91-889277K01

Metal wrench, requires a 3/8 in. drive ratchet.

Fits the (877761__) oil filter found on the 75-115 EFI FourStroke outboard (serial number 1B366823-2B094955) and the 150 hp. EFI FourStroke outboard.

Mercury Branded, Clamshell Package Point of Sale Packaged.

91-889277Q01

Metal wrench, requires a 3/8 in. drive ratchet.

Fits the (877761__) oil filter found on the 75-115 EFI FourStroke outboard (serial number 1B366823-2B094995) and the 150 hp. EFI FourStroke outboard.

Quicksilver Branded, Clamshell Package Point of Sale Packaged.

OIL FILTER WRENCH



91-889277K03

Metal wrench, requires a 3/8 in. drive ratchet.

Fits the 896546_ series & 883701_ series oil filter found on the early Verado 135-275 hp. FourStroke outboards.

Mercury Branded, Clamshell Package Point of Sale Packaged.

OIL DRIP TRAY



8M0052100

After the oil resevoir has been properly drained, this tray when in place will help to prevent oil from dripping into the lower cowl when removing the side mounted engine filters listed in the application.

Fits the F25/30hp. EFI FourStroke Outboards and the F40-60hp. FourStroke outboards.

TABLE OF CONTENTS

Quick Reference Guide-Outboard 342

Quick Reference FourStroke Charts 349
Quick Reference TwoStroke Charts 342

Quick Reference Guide-MerCruiser 388

Quick Reference MerCruiser Charts- Gas Models 388

QUICK REFERENCE GUIDE-OUTBOARD

QUICK REFERENCE TWOSTROKE CHARTS

75-90-115 Optimax 1B227000 & above

Description		Part Number			Page
	Controls				
Side Mount - MSC 4000 Series - Electric w/trim	15 ft. (4.6 m) harness	8M0083666			525
	20 ft. (6.1 m) harness	8M0083667			525
Dual Engine Remote Control Kit	(for side mount control stacking)	16909A 2			528
Panel Mount (with trim) - MPC 4000 Series (Gen II)	Finger Release - Black Handle	8M0011213			521
	Finger Release - Chrome Handle	8M0030550			522
	Lock Bar	883710A02			522
Console Mount (single eng. with trim) - Commander		88688A25			529
Console Mount (single eng. with trim) - MCC 4500	Gen II	8M0059686			523
Console Mount (dual eng. with trim) - Commander	Twin trim switches in handle	88688A22			529
Console Mount (dual eng. with trim) - MCC 4500	(Gen II) - single trim switch in handle	8M0075245			524
Throttle/Shift Cables (two per engine) - (Gen I)	(Premium Series)	897977A03	thru	897977A50	545
Throttle/Shift Cables (two per engine) - (Gen II)	(Premium Series)	897978A03	thru	897978A50	549
	Instrumentation				
All Models Max WOT Range = 5,000-5,750 RPM's					
Tachometer - 8000 RPM - Flagship	Black Face	79-895283A06			466
	White Face	79-895283A26			471
Tachometer - 8000 RPM - Admiral	Black Face	79-895283Q06			480
	White Face	79-895283Q26			488
Tachometer - 7000 RPM - Flagship	Black Face	79-895283A05			466
	White Face	79-895283A25			471
Tachometer - 7000 RPM - Admiral	Black Face	79-895283Q05			479
	White Face	79-895283Q25			488
Tachometer - 6000 RPM - Flagship	Black Face	79-895283A03			466
	White Face	79-895283A23			471
Tachometer - 6000 RPM - Admiral	Black Face	79-895283Q03			479
	White Face	79-895283Q23			488
Tachometer Harness - Analog	5 ft. length x 14 pin	84-892990T01			603
	10 ft. length x 14 pin	84-892990T10			603
	15 ft. length x 14 pin	84-892990T15			603
Speedometer - 65 MPH - Flagship	Black Face	79-895285A03			466
	White Face	79-895285A23			471
Speedometer - 65 MPH - Admiral	Black Face	79-895285Q03			480
	White Face	79-895285Q23			488

Description		Part Number	Page
Battery Meter - Flagship	Black Face	79-895286A01	467
	White Face	79-895286A21	472
Battery Meter - Admiral	Black Face	79-895286Q01	481
	White Face	79-895286Q21	489
Fuel Gauge - Flagship	Black Face	79-895291A01	469
	White Face	79-895291A21	474
Fuel Gauge - Admiral	Black Face	79-895291Q01	482
	White Face	79-895291Q21	491
Cruiselog (hour meter) - Flagship	Black Face	79-895295A01	470
	White Face	79-895295A21	475
Cruiselog (hour meter) - Admiral	Black Face	79-895295Q01	483
	White Face	79-895295Q21	491
Power Trim - Flagship - Analog	Black Face	79-895292A01	470
	White Face	79-895292A21	474
Power Trim - Admiral - Analog	Black Face	79-895292Q01	483
	White Face	79-895292Q21	491
Power Trim Sender Kit		8M0074845	
Water Pressure Gauge - 15 PSI - Flagship	Black Face - Analog - (requires hose kit)	79-895288A01	468
	White Face - Analog - (requires hose kit)	79-895288A21	473
Water Pressure Gauge - 15 PSI - Admiral	Black Face - Analog - (requires hose kit)	79-895288Q01	481
	White Face - Analog - (requires hose kit)	79-895288Q21	490
Water Pressure Gauge Hose Kit	(required for analog gauge use)	32-892156A01	500
Service Monitor	Apply 3 wraps for proper operation	79-8M0050399	507
	Electrical		
Ignition/Choke Assembly - 11 ft. (3.35 m) harness		84-896537K11	617
Ignition/Choke Assembly - 15 ft. (4.6 m) harness		84-896537K15	617
Ignition/Choke Assembly - 20 ft. (6.1 m) harness		84-896537K20	618
Ignition/Choke Assembly - 25 ft. (7.62 m) harness		84-896537K24	618
Ignition/Choke Assembly - 30 ft. (9.14 m) harness		84-896537K29	618
Power Trim Switch Kit - 10 ft. (3.0 m)	Transom Mounted	87- 18286A18	30, 642
Power Trim Switch Kit - 25 ft. (7.6 m)	Transom Mounted	87- 18286A19	642
Lanyard Stop Switch, single outboard	Flush mounted	87- 19674A07	627
	Chrome bezel mounted	87- 19674A08	627
Lanyard Stop Switch, dual outboards	Flush mounted	87- 19674A12	627
	Chrome bezel mounted	87- 19674A13	627
	Fuel Line Assemblies, Tanks & Hardware (Low Permeation hoses shown below)		
Fuel Filter	Located on VST	35-8M0060041	241
Fuel Line 9 ft. (2.74m) - (US-EPA)	5/16 ID - Primer Bulb - No Ends	32-8M0061899	73

Description		Part Number	Page
Fuel Line 12 ft. (3.7m) - Q/S - (US-EPA)	5/16 ID - Primer Bulb - No Ends	32-8M0061887	73
Fuel Line 12 ft. (3.7m) - MPP - (US-EPA)	5/16 ID - Primer Bulb - No Ends	32-8M0061896	73
Fuel Line 9 ft. (2.74m) - (non-EPA)	5/16 ID - Primer Bulb - No Ends	32-8M8026967	
Fuel Line 12 ft. (3.7m) - Q/S - (non-EPA)	5/16 ID - Primer Bulb - No Ends	32-8M0054326	
Fuel Line 12 ft. (3.7m) - MPP - (non-EPA)	5/16 ID - Primer Bulb - No Ends	32-8M0054331	
Bulk Fuel Line - (low permeation)	5/16 ID - no bulb or ends - 100 ft.	32-8M0038500	74
	3/8 ID - no bulb oe ends - 100 ft.	32-8M0038563	74
Fuel Line Connector	3/8 to 5/16	22-8M0001721	78
Primer Bulb - MPP (US-EPA)	Used with 5/16 or 3/8 ID fuel lines	8M0061876	74
Primer Bulb - QS (US-EPA)	Used with 5/16 or 3/8 ID fuel lines	8M0061875	74
Primer Bulb - MPP (non-EPA)	Used with 5/16 or 3/8 ID fuel lines	8M0054314	
Primer Bulb - QS (non-EPA)	Used with 5/16 or 3/8 ID fuel lines	8M0054313	
Fuel Tank (US-EPA) 6.6 gal. Box Style	US-EPA 2011 Compliant	1200-8M0054600	70
Fuel Tank (US-EPA) 6.6 gal. - Suitcase Style	US-EPA 2011 Compliant	1200-8M0045691	70
Fuel Tank (non-US) 6.6 gal. (25 L) - Plastic Box Style	Quick connect fuel line connection/integral gauge	1200-8M0083451	
Fuel Tank (non-US) 6.6 gal. - Plastic Suitcase Style	Quick connect fuel line connection/integral gauge	1200-8M0083452	
	Miscellaneous Accessories		
Remote Oil Tank Kit		1257- 8742A25	90, 455
Tilt Limit Switch Kit	Analog device	899625K02	640
	Digital device	899625K04	640
Coastal Flushing Kit	(allows engine flushing while in water)	858566A02	69
Tiller Handle Kit - Traditional		896648A09	47
Big Tiller	Mechanical Non-Power Steering Version	8M0093581	48, 655
Big Tiller	Mechanical Power Steering Version	8M0094637	48, 655
Big Tiller thottle/shift cable kit	Required for either version	897978K02	49, 656
Big Tiller Auxiliary Light	Optional	897978T02	50, 657
RPM Adjuster	Optional	87-8M0083437	49, 643
Flushing Attachment - allows running engine - Q/S	(not for use with Jet 65)	44357Q 2	170
Flushing Attachment - allows running engine - MPP	(not for use with Jet 65)	44357T 2	170
	Steering		
Ride Guide Attaching Kit - 75/90	Single Engine - Single Cable	92876A12	705
	Single Engine - Two Cable	92876A 8	707
	Dual Engine - Two Cable	92876A 9	708
	Hydraulic Steering - Optional		
Hydraulic Helms	Standard 1.4L Helm w/fluid & mtg. hdwe.	8M0050098	675
	Tilt Helm w/fluid & mtg. hdwe.	8M0050099	675
Remote Fill Kit	Use with Tilt Helm Kit	64-889934A05	678

Description		Part Number			Page
Hydraulic Hoses	Cylinder to helm	32-8M0053474	thru	8M0053491	677
Hydraulic Cylinder - Standard Rotation	Single engines	8M0054993			674

V-6 Optimax (Non DTS) 1B227000 & above

Description		Part Number			Page
	V-6 Optimax SmartCraft Riging Kits				
Single Engine Data Kit with Oil Sender	System Monitor or VesselView not included (will accommodate System Tach/Speed) (will accommodate System Link gauges) (requires 84-896537_ Series Harness)	8M0056277			454
Dual Engine Data Kit with Oil Sender	System Monitor or VesselView not included (will accommodate System Tach/Speed) (will accommodate System Link gauges) (requires 84-896537_ Series Harness)	8M0056279			454
	Controls				
Side Mount - MSC 4000 Series - Electric w/trim	15 ft. (4.6 m) harness	8M0083666			525
	20 ft. (6.1 m) harness	8M0083667			525
Dual Engine Remote Control Kit	(for side mount control stacking)	16909A 2			528
Panel Mount (with trim) - MPC 4000 Series (Gen II)	Finger Release - Black Handle	8M0011213			521
	Finger Release - Chrome Handle	8M0030550			522
	Lock Bar	883710A02			522
Console Mount (single eng. with trim) - Commander		88688A25			529
Console Mount (single eng. with trim) - MCC 4500	Gen II	8M0059686			523
Console Mount (dual eng. with trim) - Commander	Twin trim switches in handle	88688A22			529
Console Mount (dual eng. with trim) - MCC 4500	(Gen II) - single trim switch in handle	8M0075245			524
Throttle/Shift Cables (two per engine) - (Gen I)	(Premium Series)	897977A03	thru	897977A50	545
Throttle/Shift Cables (two per engine) - (Gen II)	(Premium Series)	897978A03	thru	897978A50	549
	Instrumentation - Analog Gauges				
135 HP. Max WOT Range = 5,000-5,600 RPM's 150/175 HP. Max WOT Range = 5,250-5,750 RPM's 200/225 HP. Max WOT Range = 5,000-5,750 RPM's 250 HP. Max WOT Range = 5,500-6,000 RPM's					
Service Monitor	Apply 3 wraps for proper operation	79-8M0050399			507
Tachometer - 8000 RPM - Flagship	Black Face	79-895283A06			466
	White Face	79-895283A26			471
Tachometer - 8000 RPM - Admiral	Black Face	79-895283Q06			480
	White Face	79-895283Q26			488

Description		Part Number	Page
Tachometer - 7000 RPM - Flagship	Black Face	79-895283A05	466
	White Face	79-895283A25	471
Tachometer - 7000 RPM - Admiral	Black Face	79-895283Q05	479
	White Face	79-895283Q25	488
Tachometer - 6000 RPM - Flagship	Black Face	79-895283A03	466
	White Face	79-895283A23	471
Tachometer - 6000 RPM - Admiral	Black Face	79-895283Q03	479
	White Face	79-895283Q23	488
Tachometer Harness - Analog	5 ft. length x 14 pin	84-892990T01	603
	10 ft. length x 14 pin	84-892990T10	603
	15 ft. length x 14 pin	84-892990T15	603
Speedometer - 80 MPH - Flagship	Black Face	79-895285A04	467
	White Face	79-895285A24	471
Speedometer - 80 MPH - Admiral	Black Face	79-895285Q04	480
	White Face	79-895285Q24	488
Speedometer - 65 MPH - Flagship	Black Face	79-895285A03	466
	White Face	79-895285A23	471
Speedometer - 65 MPH - Admiral	Black Face	79-895285Q03	480
	White Face	79-895285Q23	488
Battery Meter - Flagship	Black Face	79-895286A01	467
	White Face	79-895286A21	472
Battery Meter - Admiral	Black Face	79-895286Q01	481
	White Face	79-895286Q21	489
Fuel Gauge - Flagship	Black Face	79-895291A01	469
	White Face	79-895291A21	474
Fuel Gauge - Admiral	Black Face	79-895291Q01	482
	White Face	79-895291Q21	491
Cruiselog (hour meter) - Flagship	Black Face	79-895295A01	470
	White Face	79-895295A21	475
Cruiselog (hour meter) - Admiral	Black Face	79-895295Q01	483
	White Face	79-895295Q21	491
Power Trim - Flagship - Analog	Black Face	79-895292A01	470
	White Face	79-895292A21	474
Power Trim - Admiral - Analog	Black Face	79-895292Q01	483
	White Face	79-895292Q21	491
Water Pressure Gauge - 30 PSI - Flagship	Black Face	79-895288A03	468
	White Face	79-895288A23	473
Water Pressure Gauge - 30 PSI - Admiral	Black Face	79-895288Q03	482
	White Face	79-895288Q23	490
Water Temperature Gauge (100-240 deg. F) - Flagshi	Black Face	79-895287A01	468
	White Face	79-895287A21	472
Water Temperature Gauge (100-240 deg. F) - Admiral	Black Face	79-895287Q01	481
	White Face	79-895287Q21	489

Description		Part Number	Page
Dual Engine Synchronizer - Flagship	Black Face	79-895294A01	469
	White Face	79-895294A21	474
Dual Engine Synchronizer - Admiral	Black Face	79-895294Q01	483
	White Face	79-895294Q21	491
Oil Level (for tanks w/quick connect)	Flagship - Black Face	79-895290A01	469
	Flagship - White Face	79-895290A21	474
	Admiral - Black Face	79-895290Q01	482
Oil Level (for tanks w/o quick connect)	Flagship - Black Face	79-859691A 3	
	Admiral - White Face	879346A58	
(Verify engine for suitability of product.)	Instrumentation - SmartCraft Gauges		
SC1000 System Monitor - Front Mount	Rectangular	79-879896K21	435
SC1000 System Monitor - Rear Mount	Rectangular	79-879896K19	435
SC1000 System Monitor - Front Mount	Round - Black	79-892219K19	435
	Round - White	79-892219K20	435
MercMonitor - NMEA 2000	Gateway Level 1 ECO Screen	79-8M0079864	434
	Gateway Level 2 SmartTow RPM, ECO Screen	79-8M0079865	434
	Gateway Level 3 SmartTow Pro, ECO Screen	79-8M0079866	434
	Gateway Level 3 SmartTow Pro w/GPS puck, ECO Scrren	79-8M0079867	434
	ECO Screen only	79-8M0062377	434
SC1000 Black - Glass Lens	Bezels must be ordered separately.		
	Glass Lens 7,000 Tach	79-8M0079894	411
	Glass Lens, Single Engine Kit	79-8M0079889	412
	Glass Lens, Dual Engine Kit	79-8M0079887	412
SC1000 White - Glass Lens	Bezels must be ordered separately.		
	Glass Lens 7,000 Tach	79-8M0079892	410
	Glass Lens, Single Engine Kit	79-8M0079881	411
	Glass Lens, Dual Engine kit	79-8M0079881	411
SC1000 Gray - Glass Lens	Bezels must be ordered separately.		
	Glass Lens 7,000 Tach	79-8M0079897	413
	Glass Lens, Single Engine Kit	79-8M0079900	413
	Glass Lens, Dual Engine kit	79-8M0079901	414
VesselView 4		8M0074096	406
VesselView 7		8M0074095	406
	Electrical		
Ignition/Choke Assembly - 2 ft. (609 mm) harness		84-896537K02	617
Ignition/Choke Assembly - 8 ft. (2.44 m) harness		84-896537K08	617
Ignition/Choke Assembly - 11 ft. (3.35 m) harness		84-896537K11	617
Ignition/Choke Assembly - 15 ft. (4.6 m) harness		84-896537K15	617
Ignition/Choke Assembly - 20 ft. (6.1 m) harness		84-896537K20	618
Ignition/Choke Assembly - 25 ft. (7.62 m) harness	Single harness	84-896537K24	618

Description		Part Number	Page
Ignition/Choke Assembly - 25 ft. (7.62 m) harnesses	Two harnesses	84-896537K25	618
Ignition/Choke Assembly - 30 ft. (9.14 m) harness	Single harness	84-896537K29	618
Ignition/Choke Assembly - 30 ft. (9.14 m) harnesses	Two harnesses	84-896537K30	618
Lanyard Stop Switch, single engine	Flush mounted	87- 19674A07	627
	Chrome bezel mounted	87- 19674A08	627
Lanyard Stop Switch, dual engine	Flush mounted	87- 19674A12	627
	Chrome bezel mounted	87- 19674A13	627
Lanyard Stop Switch, triple or quad	Flush mounted	87- 19674A14	628
	Chrome bezel mounted	87- 19674A15	628
Diode Assembly - dual engine	(required to use a single lanyard)	84-898289A72	628
	Fuel Line Assemblies, Tanks & Hardware (new Low Permeation hoses shown below)		
Water Separating Fuel Filter - canister style	Located on 3.0L EFI and all 2.5L	35- 18458Q 4	84
Fuel Filter - Element Style	Located on 3.0L DFI and DTS	35-8M0060041	241
Fuel Line 9 ft. (2.74m) - (US-EPA)	5/16 ID - Primer Bulb - No Ends	32-8M0061899	73
Fuel Line 12 ft. (3.7m) - Q/S - (US-EPA)	5/16 ID - Primer Bulb - No Ends	32-8M0061887	73
Fuel Line 12 ft. (3.7m) - MPP - (US-EPA)	5/16 ID - Primer Bulb - No Ends	32-8M0061896	73
Fuel Line 9 ft. (2.74m) - (non-EPA)	5/16 ID - Primer Bulb - No Ends	32-8M8026967	
Fuel Line 12 ft. (3.7m) - Q/S - (non-EPA)	5/16 ID - Primer Bulb - No Ends	32-8M0054326	
Fuel Line 12 ft. (3.7m) - MPP - (non-EPA)	5/16 ID - Primer Bulb - No Ends	32-8M0054331	
Bulk Fuel Line - (low permeation)	5/16 ID - no bulb or ends - 100 ft.	32-8M0038500	74
	3/8 ID - no bulb or ends - 100 ft.	32-8M0038563	74
Fuel Line Connector	3/8 to 5/16	22-8M0001721	78
Primer Bulb - MPP (US-EPA)	Used with 5/16 or 3/8 ID fuel lines	8M0061876	74
Primer Bulb - QS (US-EPA)	Used with 5/16 or 3/8 ID fuel lines	8M0061875	74
Primer Bulb - MPP (non-EPA)	Used with 5/16 or 3/8 ID fuel lines	8M0054314	
Primer Bulb - QS (non-EPA)	Used with 5/16 or 3/8 ID fuel lines	8M0054313	
Fuel Tank (US-EPA) 6.6 gal. Box Style	US-EPA 2011 Compliant	1200-8M0054600	70
Fuel Tank (US-EPA) 6.6 gal. Suitcase Style	US-EPA 2011 Compliant	1200-8M0045691	70
Fuel Tank (non-US) 6.6 gal. (25 L) - Plastic Box Style	Quick connect fuel line connection/integral gauge	1200-8M0083451	
Fuel Tank (non-US) 6.6 gal. - Plastic Suitcase Style	Quick connect fuel line connection/integral gauge	1200-8M0083452	
	Miscellaneous Accessories		
Oil Tank Extension Kit	(includes 30 ft. of double oil hose)	41729A 3	91
Oil Tank Hold Down Kit	For optional 1.8 gallon tank	824954A 1	91
	For 3 gallon tank - floor or wall mount	12335A 1	91
	For 3 gallon tank - floor mount only	884481A 1	91
Optional Oil Tank System	1.8 gallon (6.8 L)	15943A 1	90
Deck Oil Fill	Straight filler neck	15969A09	92
	80 degree filler neck	15969A10	92
Rigging Hose Kit		32-825191A03	56, 541

Description		Part Number	Page
High Altitude Gear Kit	Converts 1.87:1 to 2:1 gear ratio	43- 44102A 2	66
Trim Limit Switch Kit - mercury switch style	Model Year 2003 & newer 3.0L Optimax	87-887979A 2	35
Trim Limit Switch Kit - electronic switch style	Analog device	899625K02	640
Trim Limit Switch Kit - electronic switch style	Digital device	899625K04	640
Trim Reducer Kit		858915A 1	35
Trailering Clip		833006A 1	36
Big Tiller	Mechanical Power Steering Version	8M0094637	48, 655
Big Tiller throttle/shift cable kit	Required	897978K03	49, 657
Big Tiller Auxiliary Light	Optional	897978T02	50, 657
RPM Adjuster	Optional	87-8M0083437	49, 643
Flushing Attachment - allows running engine - Q/S	(not for use with Jet)	44357Q 2	170
Flushing Attachment - allows running engine - MPP	(not for use with Jet)	44357T 2	170
Dual Water Pickup Flush Seal Kit - Q/S		881150Q 1	170
Dual Water Pickup Flush Seal Kit - MPP		881150K 1	170
	Steering		
Ride Guide Attaching Kit - Mechanical	Single Engine - Two Cable	92876A 8	707
	Dual Engine - Two Cable	92876A 9	708
Hydraulic Steering - bolt on	Standard 1.5 Helm without hoses	8M0056139	676
	Tilit Helm w/remote fill (no hoses)	8M0056140	676
	Port Cylinder	8M0056145	676
	Starboard Cylinder	8M0050097	676
Hydraulic Hoses	Cylinder to Helm	32-8M0053474 thru 8M0053491	677
Dual Engine Tie Bars	Dual engine with single cylinder	64-8M0063473 thru 8M0063477	671
	Dual engine with two cylinders	64-892789Q22 thru 892789Q27	672
Kicker Tie Bar	Port engine mount	898370A03	673
	Starboard engine mount	898966A02	673

QUICK REFERENCE FOURSTROKE CHARTS

4-5-6 Hp FourStroke 0R411838 & above

Description		Part Number	Page
	Controls		
Side Mount - MSC 4000 Series - Manual		881170A 8	528
Remote Control Conversion Kit - general	Control, cables, etc. not included in kit		
Remote Control Conversion Kit	Converts Tiller model to RC model	8M0062241	539

Description		Part Number	Page
Harness Assembly	Required with RC attaching kit	84- 17162	540
Throttle/Shift Cables (two required)		8M0052484 thru 8M0052509	544
	Instrumentation		
Service Monitor	Apply 3 wraps for proper operation	79-8M0050399	507
	Ignition/Charging		
Battery Charging Kit	Serial Number 0R411838 and above	8M0056549	25
Lighting Coil Kit	0R426997 and above except 5ML (non EPA) and 5 sailpower	8M0056548	21
Voltage Regulator Kit		84125T	21
Lighting Extension Harness		84- 17175	21
	Fuel Line Assemblies, Tanks & Hardware		
Fuel Filter		35- 16248	231
Water Separating Fuel Filter Kit	Under cowl accessory	8M0056547	85
Fuel Tank (US-EPA) 3.2 gal. (12 L) - Plastic	US-EPA 2011 Compliant, without gauge	1200-8M0045692	71
Fuel Tank (US-EPA) 3.2 gal. (12 L) - Plastic	US-EPA 2011 Compliant, with fuel gauge	1200-8M0047598	71
Fuel Tank (non-EPA) 3.2 gal. (12 L) - Plastic	Super, quick connection, with gauge	1200-8M0083449	
Fuel Tank (non-EPA) 3.2 gal. (12 L) - Plastic	Premium, threaded connection, with gauge	1200-8M0047599	
Fuel Tank (non-EPA) 3.2 gal. (12 L) - Plastic	Standard, threaded connection, without gauge	1200-8M0056211	
Primer Bulb Assembly (US-EPA)	MPP Branded	8M0061876	74
	QS Branded	8M0061875	74
Primer Bulb Assembly (non-EPA)	MPP Branded	8M0054314	
	QS Branded	8M0054313	
	Miscellaneous Accessories		
Flushing Attachment - static flush	Serial number 0R411838 and above	8M0057047	67
Flushing Attachment - allows running engine - Q/S		12612Q 2	68
Flushing Attachment - allows running engine - MPP		12612T 2	68
Motor Lock - Standard - Q/S		N.L.A.	
	Steering		
Cable and Pulley Attaching Kit		17024	709
Clevis Kit		70599A 5	708

8-9.9 Hp FourStroke 0R192772 & above

Description		Part Number			Page
	Controls				
Side Mount - General Information	May be used above serial 0R042475				
Side Mount - MSC 4000 Series - Manual	Gen I	881170A 4			528
Side Mount - MSC 4000 Series - Electric	Gen I	881170A12			527
Side Mount - MSC 4000 Series - Electric w/trim	15 ft. (4.6 m) harness, Gen I	881170A10			526
	20 ft. (6.1 m) harness, Gen I	881170A11			526
Panel Mount Controls - General Information	May only be used above s/n 0R052327				
Panel Mount (non-trim) - MPC 4000 Series (Gen II)	Finger Release - Black Handle	8M0011212			522
	Lock Bar	883710A01			523
Panel Mount (with trim) - MPC 4000 Series (Gen II)	Finger Release - Black Handle	8M0011213			521
	Finger Release - Chrome Handle	8M0030550			522
	Lock Bar	883710A02			522
Console Mount - General Information	May only be used above s/n 0R052327				
Console Mount (single eng. w/o-trim) - Commander		88688A27			529
Console Mount (single eng. w/o-trim) - MCC 4500	Gen II	8M0060782			523
Console Mount (single eng. with trim) - Commander		88688A25			529
Console Mount (single eng. with trim) - MCC 4500	Gen II	8M0059686			523
Remote Control Conversion Kit - general	Control, cables, etc. not included in kits				
Remote Control Conversion Kit - electric EPA model	Converts 9.9 electric tiller to electric remote	889246A81			538
Remote Control Conversion Kit - electric EU model	Converts 9.9 electric tiller to electric remote	889246A87			538
Remote Control Conversion Kit - manual	Converts manual tiller to manual remote	889246A80			538
Throttle/Shift Cables (two required) - GEN I		897977A03	thru	897977A50	545
Throttle/Shift Cables (two required) - GEN II		897978A03	thru	897978A50	549
Cable Connection Kit (for 0R192771 & prior)	Convert older SAE engines to Mercury style cable	898289A21			555
	Instrumentation				
8/9.9 Hp. Max WOT Range = 5,000-6,000 RPM's					
Tachometer - 6000 RPM - Flagship	Black Face	79-895283A03			466
	White Face	79-895283A23			471
Tachometer - 6000 RPM - Admiral	Black Face	79-895283Q03			479
	White Face	79-895283Q23			488
Digital Depth Gauge Kit	White Face/White Bezel	79-879292A02			472
	Black Face/Black Bezel	79-879292A01			467
Service Monitor	Apply 3 wraps for proper operation	79-8M0050399			507
	Ignition/Charging				
Battery Charging Kit		895299A02			24
	Electrical				
14 pin x 2 ft. (.61 m) harness	Requires adapter harness, choke harness & keyswitch	84-896537T02			602

Description		Part Number	Page
14 pin x 8 ft. (2.44 m) harness	Requires adapter harness, choke harness & keyswitch	84-896537T08	602
14 pin x 11 ft. (3.35 m) harness	Requires adapter harness, choke harness & keyswitch	84-896537T11	602
14 pin x 15 ft. (4.6 m) harness	Requires adapter harness, choke harness & keyswitch	84-896537T15	602
14 pin x 20 ft. (6.1 m) harness	Requires adapter harness, choke harness & keyswitch	84-896537T20	602
14 pin x 25 ft. (4.6 m) harness	Requires adapter harness, choke harness & keyswitch	84-896537T24	603
14 pin x 30 ft. (4.6 m) harness	Requires adapter harness, choke harness & keyswitch	84-896537T29	603
Keyswitch	Required for above harnesses	87- 88107A13	614
Ignition/Choke Assembly - Transom Mounted	14 pin, requires adapter harness & choke harness	15000A14	40, 619
Ignition/Choke Assembly - 2 ft. (.61 m) harness	8 pin, requires adapter harness	84-816626A 2	222, 617
Ignition/Choke Assembly - 8 ft. (2.44 m) harness	8 pin, requires adapter harness	84-816626A 8	617
Ignition/Choke Assembly - 11 ft. (3.35 m) harness	8 pin, requires adapter harness	84-816626A11	617
Ignition/Choke Assembly - 15 ft. (4.6 m) harness	8 pin, requires adapter harness	84-816626A15	222, 617
Ignition/Choke Assembly - 20 ft. (6.1 m) harness	8 pin, requires adapter harness	84-816626A20	222, 617
Ignition/Choke Assembly - 25 ft. (4.6 m) harness	8 pin, requires adapter harness	84-816626A24	222, 617
Ignition/Choke Assembly - 30 ft. (4.6 m) harness	8 pin, requires adapter harness	84-816626A29	617
Ignition/Choke Assembly - Transom Mounted	8 pin, requires adapter harness	15000A 7	39, 619
Adapter Harness	Adapts 14 pin control harness to engine Amp connector	84-896541T01	611
Adapter Harness	Adapts 8 pin control harness to engine Amp connector	84-892473A01	526
Choke Harness with gauge connections	Use if gauges are to be hooked up	84-892990T01	603
Choke Harness without gauge connections	Use for choke only, no gauges	84-896537T99	603
	Fuel Line Assemblies, Tanks & Hardware		
Fuel Filter		35- 16248	231
Fuel Tank (US-EPA) 3.2 gal. (12 L) - Plastic	US-EPA 2011 Compliant, without gauge	1200-8M0045692	71
Fuel Tank (US-EPA) 3.2 gal. (12 L) - Plastic	US-EPA 2011 Compliant, with fuel gauge	1200-8M0047598	71
Fuel Tank (non-EPA) 3.2 gal. (12 L) - Plastic	Super, quick connection, with gauge	1200-8M0083449	
Fuel Tank (non-EPA) 3.2 gal. (12 L) - Plastic	Premium, threaded connection, with gauge	1200-8M0047599	
Fuel Tank (non-EPA) 3.2 gal. (12 L) - Plastic	Standard, threaded connection, without gauge	1200-8M0056211	
Fuel Tank (US-EPA) 6.6 gal. (25 L) Box Style	US-EPA 2011 Compliant	1200-8M0054600	70
Fuel Tank (non-US) 6.6 gal. (25 L) Box Style	Threaded fuel line connection	1200-8M0057256	
Fuel Tank (non-US) 6.6 gal. (25 L) Box Style	Threaded fuel line connection & integral gauge	1200-8M0047607	
Fuel Tank (non-US) 6.6 gal. (25 L) Box Style	Quick connect fuel line connection/integral gauge	1200-8M0083451	
Fuel Tank (US-EPA) 6.6 gal. Suitcase Style	US-EPA 2011 Compliant	1200-8M0045691	70
Fuel Tank (non-US) 6.6 gal. Suitcase Style	Threaded fuel line connection	1200-8M0057254	
Fuel Tank (non-US) 6.6 gal. Suitcase Style	Threaded fuel line connection & integral gauge	1200-8M0047603	
Fuel Tank (non-US) 6.6 gal. Suitcase Style	Quick connect fuel line connection/integral gauge	1200-8M0083452	
Primer Bulb Assembly (US-EPA)	MPP Branded	8M0061876	74
	QS Branded	8M0061875	74
Primer Bulb Assembly (non-EPA)	MPP Branded	8M0054314	
	QS Branded	8M0054313	
	Miscellaneous Accessories		
Electric Start Conversion Kit	Converts a manual tiller to electric tiller	8M0069693	38
Power Trim Kit - standard models	Serial number 0R062090 & above	850700A07	28

Description		Part Number	Page
Power Trim Kit - BigFoot models	Serial number 0R062915 & above	850700A07	28
Tiller Handle Kit - EPA Rated	Converts electric remote to manual tiller	8M0103837	43
Tiller Handle Kit - EU Rated	Converts electric remote to electric tiller	8M0103838	43
Driveshaft Extension Kit - 5 inch (127 mm) - Black	Standard Model - Converts 20 in. to 25 in.	853783A06	58
Driveshaft Extension Kit - 5 inch (127 mm) - Black	BigFoot Model - Converts 20 in. to 25 in.	853783A05	58
Pro-Kicker Strap Kit	Fits ELPT & EXLPT, Pro-Kicker models	896297A01	99
Flushing Attachment - static flush		16841K02	67
Flushing Attachment - static flush - Q/S		16841Q02	67
Flushing Attachment - allows running engine - Q/S	Used with BigFoot gearcase	12612Q 2	68
Flushing Attachment - allows running engine - MPP	Used with BigFoot gearcase	12612T 2	68
Flushing Attachment - allows running engine - Q/S	Used with Standard & BigFoot gearcase	44357Q 2	170
Flushing Attachment - allows running engine - MPP	Used with Standard & BigFoot gearcase	44357T 2	170
Gearlube Pump Adapter		91-883704Q03	322
Mounting Hardware Kit	2 screws, washers & nuts	56- 92729A49	65
Motor Lock - Standard - Q/S		N.L.A.	
	Steering		
Ride Guide Attaching Kit	Starboard Cable Entry	17024A03	704

15 Hp (351cc) FourStroke 0R235949 & above

Description		Part Number	Page
	Controls		
Side Mount - MSC 4000 Series - Manual	Gen I	881170A 4	528
Side Mount - MSC 4000 Series - Electric	Gen I	881170A12	527
Side Mount - MSC 4000 Series - Electric w/trim	15 ft. (4.6 m) harness	881170A10	526
	20 ft. (6.1 m) harness	881170A11	526
Panel Mount (non-trim) - MPC 4000 Series (Gen II)	Finger Release - Black Handle	8M0011212	522
	Lock Bar	883710A01	523
Panel Mount (with trim) - MPC 4000 Series (Gen II)	Finger Release - Black Handle	8M0011213	521
	Finger Release - Chrome Handle	8M0030550	522
	Lock Bar	883710A02	522
Console Mount (single eng. w/o-trim) - Commander		88688A27	529
Console Mount (single eng. w/o-trim) - MCC 4500	Gen II	8M0060782	523
Console Mount (single eng. with trim) - Commander		88688A25	529
Console Mount (single eng. with trim) - MCC 4500	Gen II	8M0059686	523
Remote Control Conversion Kit - general	Control, cables, etc. not included in kits		
Remote Control Conversion Kit - 15 Hp. - electric	Converts electric tiller to electric remote	880095A11	539
Power Trim Harness Kit - Req'd above if PT model	Required for EHPT to ERCPT conversion	84-856554A02	539

Description		Part Number			Page
Throttle/Shift Cables (two per engine) - (Gen I)	Premium Series	897977A03	thru	897977A50	545
Throttle/Shift Cables (two per engine) - (Gen II)	Premium Series	897978A03	thru	897978A50	549
	Instrumentation				
15 Hp. maximum WOT range = 5,000-6,000 RPM's					
Tachometer - 7000 RPM - Flagship	Black Face	79-895283A05			466
	White Face	79-895283A25			471
Tachometer - 7000 RPM - Admiral	Black Face	79-895283Q05			479
	White Face	79-895283Q25			488
Tachometer Harness	Use with 8 or 10 pin Side Mount controls or harness	84- 86396A 8			635
Tachometer Harness - Analog - 5 ft.	Use with 14 pin Side Mount controls or harness	84-892990T01			603
Tachometer Harness - Analog - 10 ft.	Use with 14 pin Side Mount controls or harness	84-892990T10			603
Tachometer Harness - Analog - 15 ft.	Use with 14 pin Side Mount controls or harness	84-892990T15			603
Speedometer - 45/50 MPH - Flagship	Black Face	79-895285A01			466
	White Face	79-895285A21			471
Speedometer - 45/50 MPH - Admiral	Black Face	79-895285Q01			480
	White	79-895285Q21			488
Battery Meter - Flagship	Black Face	79-895286A01			467
	White Face	79-895286A21			472
Battery Meter - Admiral	Black Face	79-895286Q01			481
	White Face	79-895286Q21			489
Fuel Gauge - Flagship	Black Face	79-895291A01			469
	White Face	79-895291A21			474
Fuel Gauge - Admiral	Black Face	79-895291Q01			482
	White Face	79-895291Q21			491
Cruiselog (hour meter) - Flagship	Black Face	79-895295A01			470
	White Face	79-895295A21			475
Cruiselog (hour meter) - Admiral	Black Face	79-895295Q01			483
	White Face	79-895295Q21			491
Digital Depth Gauge Kit	Black Face/Black Bezel	79-879292A01			467
	White Face/White Bezel	79-879292A02			472
Low Oil Warning Light Kit	Dash Mounted - ERC Models only	8M0031424			507
Service Monitor	Apply 3 wraps for proper operation	79-8M0050399			507
	Ignition/Charging				
Battery Charging Kit		895299A03			24
	Electrical				
14 pin x 2 ft. (.61 m) harness	Requires adapter harness, choke harness & keyswitch	84-896537T02			602
14 pin x 8 ft. (2.44 m) harness	Requires adapter harness, choke harness & keyswitch	84-896537T08			602
14 pin x 11 ft. (3.35 m) harness	Requires adapter harness, choke harness & keyswitch	84-896537T11			602

Description		Part Number	Page
14 pin x 15 ft. (4.6 m) harness	Requires adapter harness, choke harness & keyswitch	84-896537T15	602
14 pin x 20 ft. (6.1 m) harness	Requires adapter harness, choke harness & keyswitch	84-896537T20	602
14 pin x 25 ft. (7.62 m) harness	Requires adapter harness, choke harness & keyswitch	84-896537T24	603
14 pin x 30 ft. (9.14 m) harness	Requires adapter harness, choke harness & keyswitch	84-896537T29	603
Keyswitch	Required for harnesses above	87- 88107A13	614
Ignition/Choke Assembly - Transom Mounted	14 pin, requires adapter harness & choke harness	15000A14	40, 619
Ignition/Choke Assembly - 2 ft. (.61 m) harness	8 pin, requires adapter harness	84-816626A 2	222, 617
Ignition/Choke Assembly - 8 ft. (2.44 m) harness	8 pin, requires adapter harness	84-816626A 8	617
Ignition/Choke Assembly - 11 ft. (3.35 m) harness	8 pin, requires adapter harness	84-816626A11	617
Ignition/Choke Assembly - 15 ft. (4.6 m) harness	8 pin, requires adapter harness	84-816626A15	222, 617
Ignition/Choke Assembly - 20 ft. (6.1 m) harness	8 pin, requires adapter harness	84-816626A20	222, 617
Ignition/Choke Assembly - 25 ft. (7.62 m) harness	8 pin, requires adapter harness	84-816626A24	222, 617
Ignition/Choke Assembly - 30 ft. (9.14 m) harness	8 pin, requires adapter harness	84-816626A29	617
Ignition/Choke Assembly - Transom Mounted	8 pin, requires adapter harness	15000A 7	39, 619
Adapter Harness	Adapts 8 pin control harness to engine Amp connector	84-892473A01	526
Adapter Harness	Adapts 14 pin control harness to engine Amp connector	84-896541T01	611
Choke Harness with gauge connections	Use if gauges are to be hooked up	84-892990T01	603
Choke Harness without gauge connections	Use for choke only, no gauges	84-896537T99	603
	Fuel Line Assemblies, Tanks & Hardware		
In-line Fuel Filter		35- 16248	231
Fuel Tank (US-EPA) 3.2 gal. (12 L) - Plastic	US-EPA 2011 Compliant, without gauge	1200-8M0045692	71
Fuel Tank (US-EPA) 3.2 gal. (12 L) - Plastic	US-EPA 2011 Compliant, with fuel gauge	1200-8M0047598	71
Fuel Tank (non-EPA) 3.2 gal. (12 L) - Plastic	Super, quick connection, with gauge	1200-8M0083449	
Fuel Tank (non-EPA) 3.2 gal. (12 L) - Plastic	Premium, threaded connection, with gauge	1200-8M0047599	
Fuel Tank (non-EPA) 3.2 gal. (12 L) - Plastic	Standard, threaded connection, without gauge	1200-8M0056211	
Fuel Tank (US-EPA) 6.6 gal. (25 L) Box Style	US-EPA 2011 Compliant	1200-8M0054600	70
Fuel Tank (non-US) 6.6 gal. (25 L) Box Style	Threaded fuel line connection	1200-8M0057256	
Fuel Tank (non-US) 6.6 gal. (25 L) Box Style	Threaded fuel line connection & integral gauge	1200-8M0047607	
Fuel Tank (non-US) 6.6 gal. (25 L) Box Style	Quick connect fuel line connection/integral gauge	1200-8M0083451	
Fuel Tank (US-EPA) 6.6 gal. Suitcase Style	US-EPA 2011 Compliant	1200-8M0045691	70
Fuel Tank (non-US) 6.6 gal. Suitcase Style	Threaded fuel line connection	1200-8M0057254	
Fuel Tank (non-US) 6.6 gal. Suitcase Style	Threaded fuel line connection & integral gauge	1200-8M0047603	
Fuel Tank (non-US) 6.6 gal. Suitcase Style	Quick connect fuel line connection/integral gauge	1200-8M0083452	
Primer Bulb Assembly (US-EPA)	MPP Branded	8M0061876	74
	QS Branded	8M0061875	74
Primer Bulb Assembly (non-EPA)	MPP Branded	8M0054314	
	QS Branded	8M0054313	
	Miscellaneous Accessories		
Oil Filter - QS		35-822626Q03	298
Oil Filter - MPP		35-822626K03	262
Oil Filter Wrench - QS		91-802653Q02	339
Oil Filter Wrench - MPP		91-802653K02	339

Description		Part Number	Page
Electric Start Kit	Converts a manual tiller to electric tiller.	50-8M0071380	38
Tiller Handle Kit - Black	Converts electric remote to electric tiller	8M0104197	43
Flushing Attachment - allows running engine - Q/S		44357Q 2	170
Flushing Attachment - allows running engine - MPP		44357T 2	170
Gearlube Pump Adapter		91-883704Q03	322
	Steering		
Steering Link Rod Attaching Kit	Starboard Cable Entry	853824A04	705

20 Hp (351cc) FourStroke 0R235168 & above

Description		Part Number	Page
	Controls		
Side Mount - MSC 4000 Series - Electric	Gen I	881170A12	527
Side Mount - MSC 4000 Series - Electric w/trim	15 ft. (4.6 m) harness, Gen I	881170A10	526
	20 ft. (6.1 m) harness, Gen I	881170A11	526
Panel Mount (non-trim) - MPC 4000 Series (Gen II)	Finger Release - Black Handle	8M0011212	522
	Lock Bar	883710A01	523
Panel Mount (with trim) - MPC 4000 Series (Gen II)	Finger Release - Black Handle	8M0011213	521
	Finger Release - Chrome Handle	8M0030550	522
	Lock Bar	883710A02	522
Console Mount (single eng. w/o-trim) - Commander		88688A27	529
Console Mount (single eng. w/o-trim) - MCC 4500	Gen II	8M0060782	523
Console Mount (single eng. with trim) - Commander		88688A25	529
Console Mount (single eng. with trim) - MCC 4500	Gen II	8M0059686	523
Remote Control Conversion Kit - general	Control, cables, etc. not included in kits		
Remote Control Conversion Kit - 20 Hp. - electric	Converts electric tiller to electric remote	880095A12	539
Power Trim Harness Kit - Req'd above if PT model	Required for EHPT to ERCPT conversion	84-856554A02	539
Throttle/Shift Cables (two per engine) - (Gen I)	Premium Series	897977A03 thru 897977A50	545
Throttle/Shift Cables (two per engine) - (Gen II)	Premium Series	897978A03 thru 897978A50	549
	Instrumentation		
20 Hp. maximum WOT range = 5,100-6,100 RPM's			
Tachometer - 7000 RPM - Flagship	Black Face	79-895283A05	466
	White Face	79-895283A25	471
Tachometer - 7000 RPM - Admiral	Black Face	79-895283Q05	479
	White Face	79-895283Q25	488
Tachometer Harness	Use with 8 or 10 pin Side Mount controls or harness	84- 86396A 8	635
Tachometer Harness - Analog - 5 ft.	Use with 14 pin Side Mount controls or harness	84-892990T01	603
Tachometer Harness - Analog - 10 ft.	Use with 14 pin Side Mount controls or harness	84-892990T10	603

Description		Part Number	Page
Tachometer Harness - Analog - 15 ft.	Use with 14 pin Side Mount controls or harness	84-892990T15	603
Speedometer - 45/50 MPH - Flagship	Black Face	79-895285A01	466
	White Face	79-895285A21	471
Speedometer - 45/50 MPH - Admiral	Black Face	79-895285Q01	480
	White	79-895285Q21	488
Battery Meter - Flagship	Black Face	79-895286A01	467
	White Face	79-895286A21	472
Battery Meter - Admiral	Black Face	79-895286Q01	481
	White Face	79-895286Q21	489
Fuel Gauge - Flagship	Black Face	79-895291A01	469
	White Face	79-895291A21	474
Fuel Gauge - Admiral	Black Face	79-895291Q01	482
	White Face	79-895291Q21	491
Cruiselog (hour meter) - Flagship	Black Face	79-895295A01	470
	White Face	79-895295A21	475
Cruiselog (hour meter) - Admiral	Black Face	79-895295Q01	483
	White Face	79-895295Q21	491
Digital Depth Gauge Kit	Black Face	79-879292A01	467
	White Face	79-879292A02	472
Low Oil Warning Light Kit	Dash Mounted - ERC Models only	8M0031424	507
Service Monitor	Apply 3 wraps for proper operation	79-8M0050399	507
	Ignition/Charging		
Battery Charging Kit		895299A03	24
	Electrical		
14 pin x 2 ft. (.61 m) harness	Requires adapter harness, choke harness & keyswitch	84-896537T02	602
14 pin x 8 ft. (2.44 m) harness	Requires adapter harness, choke harness & keyswitch	84-896537T08	602
14 pin x 11 ft. (3.35 m) harness	Requires adapter harness, choke harness & keyswitch	84-896537T11	602
14 pin x 15 ft. (4.6 m) harness	Requires adapter harness, choke harness & keyswitch	84-896537T15	602
14 pin x 20 ft. (6.1 m) harness	Requires adapter harness, choke harness & keyswitch	84-896537T20	602
14 pin x 25 ft. (7.62 m) harness	Requires adapter harness, choke harness & keyswitch	84-896537T24	603
14 pin x 30 ft. (9.14 m) harness	Requires adapter harness, choke harness & keyswitch	84-896537T29	603
Keyswitch	Required for harnesses above	87- 88107A13	614
Ignition/Choke Assembly - Transom Mounted	14 pin, requires adapter harness & choke harness	15000A14	40, 619
Ignition/Choke Assembly - 2 ft. (.61 m) harness	8 pin, requires adapter harness	84-816626A 2	222, 617
Ignition/Choke Assembly - 8 ft. (2.44 m) harness	8 pin, requires adapter harness	84-816626A 8	617
Ignition/Choke Assembly - 11 ft. (3.35 m) harness	8 pin, requires adapter harness	84-816626A11	617
Ignition/Choke Assembly - 15 ft. (4.6 m) harness	8 pin, requires adapter harness	84-816626A15	222, 617
Ignition/Choke Assembly - 20 ft. (6.1 m) harness	8 pin, requires adapter harness	84-816626A20	222, 617
Ignition/Choke Assembly - 25 ft. (7.62 m) harness	8 pin, requires adapter harness	84-816626A24	222, 617
Ignition/Choke Assembly - 30 ft. (9.14 m) harness	8 pin, requires adapter harness	84-816626A29	617
Ignition/Choke Assembly - Transom Mounted	8 pin, requires adapter harness	15000A 7	39, 619

Description		Part Number	Page
Adapter Harness	Adapts 8 pin control harness to engine Amp connector	84-892473A01	526
Adapter Harness	Adapts 14 pin control harness to engine Amp connector	84-896541T01	611
Choke Harness with gauge connections	Use if gauges are to be hooked up	84-892990T01	603
Choke Harness without gauge connections	Use for choke only, no gauges	84-896537T99	603
	Fuel Line Assemblies, Tanks & Hardware		
In-line Fuel Filter		35- 16248	231
Fuel Tank (US-EPA) 3.2 gal. (12 L) - Plastic	US-EPA 2011 Compliant, without gauge	1200-8M0045692	71
Fuel Tank (US-EPA) 3.2 gal. (12 L) - Plastic	US-EPA 2011 Compliant, with fuel gauge	1200-8M0047598	71
Fuel Tank (non-EPA) 3.2 gal. (12 L) - Plastic	Super, quick connection, with gauge	1200-8M0083449	
Fuel Tank (non-EPA) 3.2 gal. (12 L) - Plastic	Premium, threaded connection, with gauge	1200-8M0047599	
Fuel Tank (non-EPA) 3.2 gal. (12 L) - Plastic	Standard, threaded connection, without gauge	1200-8M0056211	
Fuel Tank (US-EPA) 6.6 gal. (25 L) Box Style	US-EPA 2011 Compliant	1200-8M0054600	70
Fuel Tank (non-US) 6.6 gal. (25 L) Box Style	Threaded fuel line connection	1200-8M0057256	
Fuel Tank (non-US) 6.6 gal. (25 L) Box Style	Threaded fuel line connection & integral gauge	1200-8M0047607	
Fuel Tank (non-US) 6.6 gal. (25 L) Box Style	Quick connect fuel line connection/integral gauge	1200-8M0083451	
Fuel Tank (US-EPA) 6.6 gal. Suitcase Style	US-EPA 2011 Compliant	1200-8M0045691	70
Fuel Tank (non-US) 6.6 gal. Suitcase Style	Threaded fuel line connection	1200-8M0057254	
Fuel Tank (non-US) 6.6 gal. Suitcase Style	Threaded fuel line connection & integral gauge	1200-8M0047603	
Fuel Tank (non-US) 6.6 gal. Suitcase Style	Quick connect fuel line connection/integral gauge	1200-8M0083452	
Primer Bulb Assembly (US-EPA)	MPP Branded	8M0061876	74
	QS Branded	8M0061875	74
Primer Bulb Assembly (non-EPA)	MPP Branded	8M0054314	
	QS Branded	8M0054313	
	Miscellaneous Accessories		
Oil Filter - QS		35-822626Q03	298
Oil Filter - MPP		35-822626K03	262
Oil Filter Wrench - QS		91-802653Q02	339
Oil Filter Wrench - MPP		91-802653K02	339
Electric Start Kit	Converts a manual tiller to electric tiller.	50-8M0071380	38
Tiller Handle Kit - Black	Converts electric remote to electric tiller	8M0051060	43
Flushing Attachment - allows running engine - Q/S		44357Q 2	170
Flushing Attachment - allows running engine - MPP		44357T 2	170
Gearlube Pump Adapter		91-883704Q03	322
	Steering		
Steering Link Rod Attaching Kit	Starboard Cable Entry	853824A04	705

25-30 Hp EFI FourStroke 0R106999 & above

Description		Part Number			Page
	Controls				
Side Mount - MSC 4000 Series - Electric non-trim	15 ft. (4.6 m) harness, Gen I	881170A16			
Side Mount - MSC 4000 Series - Electric w/trim	15 ft. (4.6 m) harness, Gen I	8M0083666			525
	20 ft. (6.1 m) harness, Gen I	8M0083667			525
	Extra 6 ft. Extension (10 pin)	84-8M0058668			526
Dual Engine Remote Control Kit	(for side mount control stacking)	16909A 2			528
Panel Mount (non-trim) - MPC 4000 Series (Gen II)	Finger Release - Black Handle	8M0011212			522
	Lock Bar	883710A01			523
Panel Mount (with trim) - MPC 4000 Series (Gen II)	Finger Release - Black Handle	8M0011213			521
	Finger Release - Chrome Handle	8M0030550			522
	Lock Bar	883710A02			522
Console Mount (single eng. w/o-trim) - Commander		88688A27			529
Console Mount (single eng. w/o-trim) - MCC 4500	Gen II	8M0060782			523
Console Mount (single eng. with trim) - Commander		88688A25			529
Console Mount (single eng. with trim) - MCC 4500	Gen II	8M0059686			523
Console Mount (dual eng. w/o-trim) - Commander		88688A24			529
Console Mount (dual eng. w/o-trim) - MCC 4500	Gen II	8M0041425			
Console Mount (dual eng. with trim) - Commander	Twin trim switches in handle	88688A22			529
Console Mount (dual eng. with trim) - MCC 4500	(Gen II) - single trim switch in handle	8M0075245			524
Throttle/Shift Cables (two per engine) - (Gen I)	(Premium Series)	897977A03	thru	897977A50	545
Throttle/Shift Cables (two per engine) - (Gen II)	(Premium Series)	897978A03	thru	897978A50	549
	Instrumentation				
25 Hp. Max WOT range = 5,000-6,000 RPM's 30 Hp. Max WOT range = 5,250-6,250 RPM's					
Tachometer - 7000 RPM - Flagship	Black Face	79-895283A05			466
	White Face	79-895283A25			471
Tachometer - 7000 RPM - Admiral	Black Face	79-895283Q05			479
	White Face	79-895283Q25			488
Tachometer Harness - Analog - 5ft.	Use with 14 pin Side Mount Controls or harnesses.	84-892990T01			603
Tachometer Harness - Analog - 10 ft.	Use with 14 pin Side Mount Controls or harnesses.	84-892990T10			603
Tachometer Harness - Analog - 15 ft.	Use with 14 pin Side Mount Controls or harnesses.	84-892990T15			603
Speedometer - 45/50 MPH - Flagship	Black Face	79-895285A01			466
	White Face	79-895285A21			471
Speedometer - 45/50 MPH - Admiral	Black Face	79-895285Q01			480
	White Face	79-895285Q21			488
Battery Meter - Flagship	Black Face	79-895286A01			467
	White Face	79-895286A21			472
Battery Meter - Admiral	Black Face	79-895286Q01			481
	White Face	79-895286Q21			489

Description		Part Number	Page
Fuel Gauge - Flagship	Black Face	79-895291A01	469
	White Face	79-895291A21	474
Fuel Gauge - Admiral	Black Face	79-895291Q01	482
	White Face	79-895291Q21	491
Cruiselog (hour meter) - Flagship	Black Face	79-895295A01	470
	White Face	79-895295A21	475
Cruiselog (hour meter) - Admiral	Black Face	79-895295Q01	483
	White Face	79-895295Q21	491
Power Trim - Flagship	Black Face	79-895292A01	470
	White Face	79-895292A21	474
Power Trim - Admiral	Black Face	79-895292Q01	483
	White Face	79-895292Q21	491
Power Trim Sender Kit		822573A12	503
Water Pressure Gauge - 30 PSI - Flagship	Black Face	79-895288A03	468
	White Face	79-895288A23	473
Water Pressure Gauge - 30 PSI - Admiral	Black Face	79-895288Q03	482
	White Face	79-895288Q23	490
Digital Depth Gauge Kit	Black Face/Black Bezel	79-879292A01	467
	White Face/White Bezel	79-879292A02	472
Low Oil Warning Light Kit	Dash Mounted - ERC Models only	8M0031424	507
	Ignition/Charging		
Battery Charging Kit	Allows manual models to charge battery	898103A90	25
	Electrical		
Ignition/Choke Assembly - 11 ft. (3.35 m) harness		84-896537K11	617
Ignition/Choke Assembly - 15 ft. (4.6 m) harness		84-896537K15	617
Ignition/Choke Assembly - 20 ft. (6.1 m) harness		84-896537K20	618
Ignition/Choke Assembly - 30 ft. (9.14 m) harness		84-896537K29	618
Ignition/Choke Assembly - Transom Mounted	14 pin connector	15000A14	40, 619
MerCathode		88334A 2	187
	Fuel Line Assemblies, Tanks & Hardware		
Fuel Filter		35-879884T	232
Fuel Tank (US-EPA) 3.2 gal. (12 L) - Plastic	US-EPA 2011 Compliant, without gauge	1200-8M0045692	71
Fuel Tank (US-EPA) 3.2 gal. (12 L) - Plastic	US-EPA 2011 Compliant, with fuel gauge	1200-8M0047598	71
Fuel Tank (non-EPA) 3.2 gal. (12 L) - Plastic	Super, quick connection, with gauge	1200-8M0083449	
Fuel Tank (non-EPA) 3.2 gal. (12 L) - Plastic	Premium, threaded connection, with gauge	1200-8M0047599	
Fuel Tank (non-EPA) 3.2 gal. (12 L) - Plastic	Standard, threaded connection, without gauge	1200-8M0056211	
Fuel Tank (US-EPA) 6.6 gal. (25 L) Box Style	US-EPA 2011 Compliant	1200-8M0054600	70
Fuel Tank (non-US) 6.6 gal. (25 L) Box Style	Threaded fuel line connection	1200-8M0057256	

Description		Part Number	Page
Fuel Tank (non-US) 6.6 gal. (25 L) Box Style	Threaded fuel line connection & integral gauge	1200-8M0047607	
Fuel Tank (non-US) 6.6 gal. (25 L) Box Style	Quick connect fuel line connection/integral gauge	1200-8M0083451	
Fuel Tank (US-EPA) 6.6 gal. Suitcase Style	US-EPA 2011 Compliant	1200-8M0045691	70
Fuel Tank (non-US) 6.6 gal. Suitcase Style	Threaded fuel line connection	1200-8M0057254	
Fuel Tank (non-US) 6.6 gal. Suitcase Style	Threaded fuel line connection & integral gauge	1200-8M0047603	
Fuel Tank (non-US) 6.6 gal. Suitcase Style	Quick connect fuel line connection/integral gauge	1200-8M0083452	
Primer Bulb Assembly (US-EPA)	MPP Branded	8M0061876	74
	QS Branded	8M0061875	74
Primer Bulb Assembly (non-EPA)	MPP Branded	8M0054314	
	QS Branded	8M0054313	
	Miscellaneous Accessories		
Oil Filter - QS		35-822626Q03	298
Oil Filter - MPP		35-822626K03	262
Oil Filter Wrench - QS		91-802653Q02	339
Oil Filter Wrench - MPP		91-802653K02	339
Electric Start Kit	Converts an MH to EH	50-899783A01	38
Tiller Handle Kit	Converts an MRC to an MH	8M0051061	44
Tiller Handle Kit	Converts an ERC to an EH	8M0051062	44
Tiller Handle Trim Switch Kit	Relocates trim switch to handle	87-898101A01	44
	(use with 879147A09)		
Remote Control Conversion Kit	Converts MH to MRC	889246A34	539
	Converts EH to ERC	889246A33	539
Flushing Attachment - allows running engine - Q/S		44357Q 2	170
Flushing Attachment - allows running engine - MPP		44357T 2	170
Prop Hardware Kit	Nut, thrust hub, washer & cotter pin	13914Q03	1008
	Steering		
Steering Link Rod (eng. bracket not included)	Starboard Entry, thru-tilt tube mechanical	898101045	706
Steering Link Rod with engine bracket	Starboard Entry, thru-tilt tube mechanical	898101A45	705

40 Hp (3 cyl) FourStroke 1C049739 & above

Description	Application	Part Number Thru P/N	Page
	Controls		
Side Mount - MSC 4000 Series - Electric (non-trim)	15 ft. (4.6 m) harness, Gen I	8M0083860	527
Side Mount - MSC 4000 Series - Electric w/trim	15 ft. (4.6 m) harness, Gen I	8M0083666	525
	20 ft. (6.1 m) harness, Gen I	8M0083667	525
	Extra 6 ft. Extension (10 pin)	84-8M0058668	526
Dual Engine Remote Control Kit	(for side mount control stacking)	16909A 2	528

Description	Application	Part Number	Thru	P/N	Page
Panel Mount (non-trim) - MPC 4000 Series (Gen II)	Finger Release - Black Handle	8M0011212			522
	Lock Bar	883710A01			523
Panel Mount (with trim) - MPC 4000 Series (Gen II)	Finger Release - Black Handle	8M0011213			521
	Finger Release - Chrome Handle	8M0030550			522
	Lock Bar	883710A02			522
Console Mount (single eng. w/o-trim) - Commander		88688A27			529
Console Mount (single eng. w/o-trim) - MCC 4500	Gen II	8M0060782			523
Console Mount (single eng. with trim) - Commander		88688A25			529
Console Mount (single eng. with trim) - MCC 4500	Gen II	8M0059686			523
Console Mount (dual eng. w/o-trim) - Commander		88688A24			529
Console Mount (dual eng. w/o-trim) - MCC 4500	Gen II	8M0075244			524
Console Mount (dual eng. with trim) - Commander	Twin trim switches in handle	88688A22			529
Console Mount (dual eng. with trim) - MCC 4500	(Gen II) - single trim switch in handle	8M0075245			524
Remote Control Attaching Kit	Converts EH (tiller) to ERC (remote)	880095A08			539
Throttle/Shift Cables (two per engine) - (Gen I)	(Premium Series)	897977A03	thru	897977A50	545
Throttle/Shift Cables (two per engine) - (Gen II)	(Premium Series)	897978A03	thru	897978A50	549
	Instrumentation				
40 Hp. Max. WOT Range = 5,500-6,000 RPM's					
Tachometer - 6000 RPM - Flagship	Black Face	79-895283A03			466
	White Face	79-895283A23			471
Tachometer - 6000 RPM - Admiral	Black Face	79-895283Q03			479
	White Face	79-895283Q23			488
Tachometer Harness - Analog - 5 ft.	Use with 14 pin Side Mount Controls or harnesses.	84-892990T01			603
Tachometer Harness - Analog - 10 ft.	Use with 14 pin Side Mount Controls or harnesses.	84-892990T10			603
Tachometer Harness - Analog - 15 ft.	Use with 14 pin Side Mount Controls or harnesses.	84-892990T15			603
Speedometer - 45/50 MPH - Flagship	Black Face	79-895285A01			466
	White Face	79-895285A21			471
Speedometer - 45/50 MPH - Admiral	Black Face	79-895285Q01			480
	White Face	79-895285Q21			488
Speedometer - 65 MPH - Flagship	Black Face	79-895285A03			466
	White Face	79-895285A23			471
Speedometer - 65 MPH - Admiral	Black Face	79-895285Q03			480
	White Face	79-895285Q23			488
Battery Meter - Flagship	Black Face	79-895286A01			467
	White Face	79-895286A21			472
Battery Meter - Admiral	Black Face	79-895286Q01			481
	White Face	79-895286Q21			489
Fuel Gauge - Flagship	Black Face	79-895291A01			469
	White Face	79-895291A21			474
Fuel Gauge - Admiral	Black Face	79-895291Q01			482

Description	Application	Part Number	Thru P/N	Page
	White Face	79-895291Q21		491
Cruiselog (hour meter) - Flagship	Black Face	79-895295A01		470
	White Face	79-895295A21		475
Cruiselog (hour meter) - Admiral	Black Face	79-895295Q01		483
	White Face	79-895295Q21		491
Power Trim - Flagship	Black Face	79-895292A01		470
	White Face	79-895292A21		474
Power Trim - Admiral	Black Face	79-895292Q01		483
	White Face	79-895292Q21		491
Power Trim Sender Kit		8M0074845		
Water Pressure Gauge - 30 PSI - Flagship	Black Face	79-895288A03		468
	White Face	79-895288A23		473
Water Pressure Gauge - 30 PSI - Admiral	Black Face	79-895288Q03		482
	White Face	79-895288Q23		490
Service Monitor	Apply 3 wraps for proper operation	79-8M0050399		507
	Electrical			
Ignition/Choke Assembly - 15 ft. (4.6 m) harness		84-896537K15		617
Ignition/Choke Assembly - 20 ft. (6.1 m) harness		84-896537K20		618
Ignition/Choke Assembly - Transom Mounted		15000A14		40, 619
Power Trim Switch Kit - 10 ft. (3.0 m)		87- 18286A18		30, 642
Power Trim Switch Kit - 25 ft. (7.6 m)		87- 18286A19		642
Lanyard Stop Switch, single engine	Flush mounted	87- 19674A07		627
	Chrome bezel mounted	87- 19674A08		627
Lanyard Stop Switch, dual engines	Flush mounted	87- 19674A12		627
	Chrome bezel mounted	87- 19674A13		627
MerCathode		88334A 2		187
	Fuel Line Assemblies, Tanks & Hardware (new Low Permeation hoses shown below)			
Fuel Filter - EFI Models	In-Line	35-879885Q		234
Fuel Line 100 ft. (30.5m) - (low permeation)	3/8 ID	32-8M0038563		74
	5/16 ID	32-8M0038500		74
Fuel Line Coupler	Barbed ends, couples 3/8 ID line to 5/16 ID Line	22-8M0001721		78
Fuel Tank (US-EPA) 6.6 gal. (25 L) Box Style	US-EPA 2011 Compliant	1200-8M0054600		70
Fuel Tank (non-US) 6.6 gal. (25 L) Box Style	Threaded fuel line connection	1200-8M0057256		
Fuel Tank (non-US) 6.6 gal. (25 L) Box Style	Threaded fuel line connection & integral gauge	1200-8M0047607		
Fuel Tank (non-US) 6.6 gal. (25 L) Box Style	Quick connect fuel line connection/integral gauge	1200-8M0083451		
Fuel Tank (US-EPA) 6.6 gal. Suitcase Style	US-EPA 2011 Compliant	1200-8M0045691		70
Fuel Tank (non-US) 6.6 gal. Suitcase Style	Threaded fuel line connection	1200-8M0057254		

Description	Application	Part Number	Thru P/N	Page
Fuel Tank (non-US) 6.6 gal. Suitcase Style	Threaded fuel line connection & integral gauge	1200-8M0047603		
Fuel Tank (non-US) 6.6 gal. Suitcase Style	Quick connect fuel line connection/integral gauge	1200-8M0083452		
Primer Bulb Assembly (US-EPA)	MPP Branded	8M0061876		74
	Quicksilver Branded	8M0061875		74
Primer Bulb Assembly (non-EPA)	MPP Branded	8M0054314		
	Quicksilver Branded	8M0054313		
	Miscellaneous Accessories			
Oil Filter - QS		35-8M0065103		298
Oil Filter - MPP		35-8M0065104		262
Oil Filter Wrench - QS		91-802653Q02		339
Oil Filter Wrench - MPP		91-802653K02		339
Crankcase Oil Pump		802889Q 1		338
Thermostat Kit		825212A 1		87
Tiller Handle Kit	Converts ERC (remote) to EH (tiller)	880093A03		46
Flushing Attachment - allows running engine - Q/S		44357Q 2		170
Flushing Attachment - allows running engine - MPP		44357T 2		170
	Steering			
Steering Bracket w/o carrying handle		816667A 2		56, 706
Ride Guide Attaching Kit	Starboard Cable Entry	19608A14		704
	Port Cable Entry	19609A 6		704

40-50-60 Hp FourStroke 1C050252 & above

Description	Application	Part Number	Thru P/N	Page
	Controls			
Side Mount - MSC 4000 Series - Electric w/trim	15 ft. (4.6 m) harness, Gen I	8M0083666		525
	20 ft. (6.1 m) harness, Gen I	8M0083667		525
	Extra 6 ft. extension (10 pin)	84-8M0058668		526
Dual Engine Remote Control Kit	Used with side mount controls	16909A 2		528
Panel Mount (with trim) - MPC 4000 Series (Gen II)	Finger Release - Black Handle	8M0011213		521
	Finger Release - Chrome Handle	8M0030550		522
	Lock Bar	883710A02		522
Console Mount (single eng. with trim) - Commander		88688A25		529
Console Mount (single eng. with trim) - MCC 4500	Gen II	8M0059686		523
Console Mount (dual eng. with trim) - Commander	Twin trim switches in handle	88688A22		529
Console Mount (dual eng. with trim) - MCC 4500	(Gen II) - single trim switch in handle	8M0075245		524

Description	Application	Part Number	Thru	P/N	Page
Remote Control Conversion Kit	40 BigFoot, 50 & 60	880095A08			539
	Converts EH (tiller) to ERC (remote)				
Remote Control Extension Harness - 10 ft. (3.0 m)		84- 17829A10			605
Remote Control Extension Harness - 20 ft. (6.1 m)		84- 17829A20			605
Throttle/Shift Cables (two per engine) - (Gen I)	(Premium Series)	897977A03	thru	897977A50	545
Throttle/Shift Cables (two per engine) - (Gen II)	(Premium Series)	897978A03	thru	897978A50	549
	Instrumentation - Analog Gauges				
40/50/60 Hp. Max WOT Range = 5,500-6,000 RPM's					
Tachometer - 7000 RPM - Flagship	Black Face	79-895283A05			466
	White Face	79-895283A25			471
Tachometer - 7000 RPM - Admiral	Black Face	79-895283Q05			479
	White Face	79-895283Q25			488
Tachometer - 6000 RPM - Flagship	Black Face	79-895283A03			466
	White Face	79-895283A23			471
Tachometer - 6000 RPM - Admiral	Black Face	79-895283Q03			479
	White Face	79-895283Q23			488
Tachometer Harness - Analog - 5 ft.	Use with 14 pin Side Mount Controls or harnesses.	84-892990T01			603
Tachometer Harness - Analog - 10 ft.	Use with 14 pin Side Mount Controls or harnesses	84-892990T10			603
Tachometer Harness - Analog - 15 ft.	Use with 14 pin Side Mount Controls or harnesses	84-892990T15			603
Speedometer - 45/50 MPH - Flagship	Black Face	79-895285A01			466
	White Face	79-895285A21			471
Speedometer - 45/50 MPH - Admiral	Black Face	79-895285Q01			480
	White Face	79-895285Q21			488
Speedometer - 65 MPH - Flagship	Black Face	79-895285A03			466
	White Face	79-895285A23			471
Speedometer - 65 MPH - Admiral	Black Face	79-895285Q03			480
	White Face	79-895285Q23			488
Battery Meter - Flagship	Black Face	79-895286A01			467
	White Face	79-895286A21			472
Battery Meter - Admiral	Black Face	79-895286Q01			481
	White Face	79-895286Q21			489
Fuel Gauge - Flagship	Black Face	79-895291A01			469
	White Face	79-895291A21			474
Fuel Gauge - Admiral	Black Face	79-895291Q01			482
	White Face	79-895291Q21			491
Cruiselog (hour meter) - Flagship	Black Face	79-895295A01			470
	White Face	79-895295A21			475
Cruiselog (hour meter) - Admiral	Black Face	79-895295Q01			483
	White Face	79-895295Q21			491
Power Trim - Flagship	Black Face	79-895292A01			470

Description	Application	Part Number	Thru P/N	Page
	White Face	79-895292A21		474
Power Trim - Admiral	Black Face	79-895292Q01		483
	White Face	79-895292Q21		491
Water Pressure Gauge - 30 PSI - Flagship	Black Face	79-895288A03		468
	White Face	79-895288A23		473
Water Pressure Gauge - 30 PSI - Admiral	Black Face	79-895288Q03		482
	White Face	79-895288Q23		490
Service Monitor	Apply 3 wraps for proper operation	79-8M0050399		507
(Verify engine for suitability of product)	Instrumentation - SmartCraft Gauges			
SC1000 System Monitor - Front Mount	Rectangular	79-879896K21		435
SC1000 System Monitor - Rear Mount	Rectangular	79-879896K19		435
SC1000 System Monitor - Front Mount	Round - Black	79-892219K19		435
	Round - White	79-892219K20		435
MercMonitor - NMEA 2000	Gateway Level 1 ECO Screen	79-8M0079864		434
	Gateway Level 2 SmartTow RPM, ECO Screen	79-8M0079865		434
	Gateway Level 3 SmartTow Pro, ECO Screen	79-8M0079866		434
	Gateway Level 3 SmartTow Pro w/GPS puck, ECO Screen	79-8M0079867		434
	ECO Screen only	79-8M0062377		434
SC1000 Black - Glass Lens	Bezels must be ordered separately			
	Glass Lens 7,000 Tach	79-8M0079894		411
	Glass Lens, Single Engine Kit	79-8M0079889		412
	Glass Lens, Dual Engine Kit	79-8M0079887		412
SC1000 White - Glass Lens	Bezels must be ordered separately			
	Glass Lens 7,000 Tach	79-8M0079892		410
	Glass Lens, Single Engine Kit	79-8M0079880		410
	Glass Lens, Dual Engine Kit	79-8M0079881		411
SC1000 - Gray Lens	Bezels must be ordered separately			
	Glass Lens 7,000 Tach	79-8M0079897		413
	Glass Lens, Single Engine Kit	79-8M0079900		413
	Glass Lens, Dual Engine Kit	79-8M0079901		414
VesselView 4		8M0074096		406
VesselView 7		8M0074095		406
	Electrical			
Ignition/Choke Assembly - 15 ft. (4.6 m) harness		84-896537K15		617
Ignition/Choke Assembly - 20 ft. (6.1 m) harness		84-896537K20		618
Ignition/Choke Assembly - Transom Mounted		15000A14		40, 619
Power Trim Switch Kit - 10 ft. (3.0 m)	With or without tiller handle	87- 18286A18		30, 642
Power Trim Switch Kit - 25 ft. (7.6 m)	With or without tiller handle	87- 18286A19		642
Lanyard Stop Switch, single engine	Flush mounted	87- 19674A07		627

Description	Application	Part Number	Thru P/N	Page
	Chrome bezel mounted	87- 19674A08		627
Lanyard Stop Switch, dual engines	Flush mounted	87- 19674A12		627
	Chrome bezel mounted	87- 19674A13		627
MerCathode		88334A 2		187
	Fuel Line Assemblies, Tanks & Hardware (Low Permeation hoses shown below)			
Fuel Filter - EFI Models		35-879885Q		234
Fuel Line 100 ft. (30.5m) - (low permeation)	3/8 ID	32-8M0038563		74
	5/16 ID	32-8M0038500		74
Fuel Line Coupler	Barbed ends, couples 3/8 ID line to 5/16 ID line	22-8M0001721		78
Fuel Tank (US-EPA) 6.6 gal. (25 L) Box Style	US-EPA 2011 Compliant	1200-8M0054600		70
Fuel Tank (non-US) 6.6 gal. (25 L) Box Style	Threaded fuel line connection	1200-8M0057256		
Fuel Tank (non-US) 6.6 gal. (25 L) Box Style	Threaded fuel line connection & integral gauge	1200-8M0047607		
Fuel Tank (non-US) 6.6 gal. (25 L) Box Style	Quick connect fuel line connection/integral gauge	1200-8M0083451		
Fuel Tank (US-EPA) 6.6 gal. Suitcase Style	US-EPA 2011 Compliant	1200-8M0045691		70
Fuel Tank (non-US) 6.6 gal. Suitcase Style	Threaded fuel line connection	1200-8M0057254		
Fuel Tank (non-US) 6.6 gal. Suitcase Style	Threaded fuel line connection & integral gauge	1200-8M0047603		
Fuel Tank (non-US) 6.6 gal. Suitcase Style	Quick connect fuel line connection/integral gauge	1200-8M0083452		
Primer Bulb Assembly (US-EPA)	MPP Branded	8M0061876		74
	QS Branded	8M0061875		74
Primer Bulb Assembly (non-EPA)	MPP Branded	8M0054314		
	QS Branded	8M0054313		
	Miscellaneous Accessories			
Oil Filter - QS		35-8M0065103		298
Oil Filter - MPP		35-8M0065104		262
Oil Filter Wrench - QS		91-802653Q02		339
Oil Filter Wrench - MPP		91-802653K02		339
Crankcase Oil Pump		802889Q 1		338
Tiller Handle Kit	40 BigFoot, 50 & 60 Converts ERC (remote) to EH (tiller)	880093A03		46
Big Tiller for ELPT Models	Manual mechanical, non-power steering	879291A04		48, 656
Big Tiller for ELHPT Models	Manual mechanical, non-power steering	879291A05		49, 656
Big Tiller throttle/shift cable kit	Required for either version	897978K04		49, 656
Big Tiller Auxiliary Light	Optional	897978T02		50, 657
Big Tiller RPM Adjuster	Optional	87-8M0083437		49, 643
Tilt Limit Switch Kit	Analog device	899625K08		640
Driveshaft Extension Kit - 5 in. - 40 BigFoot	Converts 20 in. (508 mm) to 25 in. (635 mm)	12092A20		58

Description	Application	Part Number	Thru	P/N	Page
Driveshaft Ext. Kit - 2-1/2 in. - 50/60 Standard	Converts 20 in. (508 mm) to 22-1/2 in. (572 mm)	879150A88			60
Driveshaft Ext. Kit - 5 in. - 50/60 BigFoot	Converts 20 in. (508 mm) to 25 in. (635 mm)	12092A20			58
Flushing Attachment - allows running engine - QS		44357Q 2			170
Flushing Attachment - allows running engine - MPP		44357T 2			170
	Steering				
Steering Cable Attaching Kit - Mechanical	Starboard entry	19608A14			704
	Port entry	19609A 6			704
Steering Bracket without carrying handle	Necessary to convert tiller to remote steering	816667A 2			56, 706

75-90-115 Hp FourStroke 1B366823-2B094995

Description		Part Number			Page
	Controls				
Side Mount - MSC 4000 Series - Electric w/trim	15 ft. (4.6 m) harness	8M0083666			525
	20 ft. (6.1 m) harness	8M0083667			525
	Extra 6 ft. extension (10 pin)	84-8M0058668			526
Dual Engine Remote Control Kit	Used with side mount controls	16909A 2			528
Panel Mount (with trim) - MPC 4000 Series (Gen II)	Finger Release - Black Handle	8M0011213			521
	Finger Release - Black Handle	8M0030550			522
	Lock Bar	883710A02			522
Console Mount (single eng. with trim) - Commander		88688A25			529
Console Mount (single eng. with trim) - MCC 4500	Gen II	8M0059686			523
Console Mount (dual eng. with trim) - Commander	Twin trim switches in handle	88688A22			529
Console Mount (dual eng. with trim) - MCC 4500	(Gen II) - single trim switch in handle	8M0075245			524
Throttle/Shift Cables (two per engine) - (Gen I)	Premium	897977A03	thru	897977A50	545
Throttle/Shift Cables (two per engine) - (Gen II)	Premium	897978A03	thru	897978A50	549
	Analog Instrumentation				
75/80/90/100 hp. WOT = 5000-6000 RPMs 115 hp. WOT = 5800-6400 RPM's					
Tachometer - 8000 RPM - Flagship	Black Face (setting 6P)	79-895283A06			466
	White Face (setting 6P)	79-895283A26			471
Tachometer - 8000 RPM - Admiral	Black Face (setting 6P)	79-895283Q06			480
	White Face setting (6P)	79-895283Q26			488
Tachometer - 7000 RPM - Flagship	Black Face (setting 6P)	79-895283A05			466
	White Face (setting 6P)	79-895283A25			471
Tachometer - 7000 RPM - Admiral	Black Face (setting 6P)	79-895283Q05			479
	White Face (setting 6P)	79-895283Q25			488
Tachometer Harness - Analog - 5 ft.	Use with 14 pin Side Mount controls or harnesses.	84-892990T01			603
- Analog - 10 ft.	Use with 14 pin Side Mount controls or harnesses.	84-892990T10			603
- Analog - 15 ft.	Use with 14 pin Side Mount controls or harnesses.	84-892990T15			603

Description		Part Number	Page
Speedometer - 65 MPH - Flagship	Black Face	79-895285A03	466
	White Face	79-895285A23	471
Speedometer - 65 MPH - Admiral	Black Face	79-895285Q03	480
	White Face	79-895285Q23	488
Battery Meter - Flagship	Black Face	79-895286A01	467
	White Face	79-895286A21	472
Battery Meter - Admiral	Black Face	79-895286Q01	481
	White Face	79-895286Q21	489
Fuel Gauge - Flagship	Black Face	79-895291A01	469
	White Face	79-895291A21	474
Fuel Gauge - Admiral	Black Face	79-895291Q01	482
	White Face	79-895291Q21	491
Cruiselog (hour meter) - Flagship	Black Face	79-895295A01	470
	White Face	79-895295A21	475
Cruiselog (hour meter) - Admiral	Black Face	79-895295Q01	483
	White Face	79-895295Q21	491
Power Trim - Flagship	Black Face	79-895292A01	470
	White Face	79-895292A21	474
Power Trim - Admiral	Black Face	79-895292Q01	483
	White Face	79-895292Q21	491
Power Trim Sender Kit	(equipped on engine from factory)	8M0074845	
Water Pressure Gauge - 40 PSI - Flagship	Black Face	79-895288A05	469
	White Face	79-895288A25	473
Water Pressure Gauge - 40 PSI - Admiral	Black Face	79-895288Q05	482
	White Face	79-895288Q25	490
Water Pressure Fitting	(included in 40 PSI water pressure kits)	22-896094A01	500
(Verify engine for suitability of product)	SmartCraft Instrumentation		
SmartCraft Conversion Kit	Includes block water temp & pressure sensors	889250K01	453
	Includes trim position & pitot sensors		
	Gauges must be ordered separately		
SC1000 System Monitor - Front Mount	Rectangular	79-879896K21	435
SC1000 System Monitor - Rear Mount	Rectangular	79-879896K19	435
SC1000 System Monitor - Front Mount	Round - Black	79-892219K19	435
	Round - White	79-892219K20	435
MercMonitor - NMEA 2000	Gateway Level 1 ECO Screen	79-8M0079864	434
	Gateway Level 2 SmartTow RPM, ECO Screen	79-8M0079865	434
	Gateway Level 3 SmartTow Pro, ECO Screen	79-8M0079866	434
	Gateway Level 3 SmartTow Pro w/GPS puck, ECO Screen	79-8M0079867	434
	ECO Screen only	79-8M0062377	434
SC1000 Black - Glass Lens	Bezels must be ordered separately		

Description		Part Number	Page
	Glass Lens, 7,000 Tach	79-8M0079894	411
	Glass Lens, Single Engine Kit	79-8M0079889	412
	Glass Lens, Dual Engine Kit	79-8M0079887	412
SC1000 White - Glass Lens	Bezels must be ordered separately		
	Glass Lens, 7,000 Tach	79-8M0079892	410
	Glass Lens, Single Engine Kit	79-8M0079880	410
	Glass Lens, Dual Engine Kit	79-8M0079881	411
SC1000 Gray - Glass Lens	Bezels must be ordered separately		
	Glass Lens, 7,000 Tach	79-8M0079897	413
	Glass Lens, Single Engine Kit	79-8M0079900	413
	Glass Lens, Dual Engine Kit	79-8M0079901	414
VesselView 4		8M0074096	406
VesselView 7		8M0074095	406
	Electrical		
Ignition/Choke Assembly - 2 ft. (.61 m) harness	with keyswitch	84-896537K02	617
Ignition/Choke Assembly - 8 ft. (2.4 m) harness	with keyswitch	84-896537K08	617
Ignition/Choke Assembly - 11 ft. (3.3 m) harness	with keyswitch	84-896537K11	617
Ignition/Choke Assembly - 15 ft. (4.6 m) harness	with keyswitch	84-896537K15	617
Ignition/Choke Assembly - 20 ft. (6.1 m) harness	with keyswitch	84-896537K20	618
Ignition/Choke Assembly - 25 ft. (6.1 m) harness	with keyswitch	84-896537K24	618
Power Trim Switch Kit - 10 ft. (3.0 m)	Surface or flush mounting	87- 18286A47	642
Power Trim Switch Kit - 25 ft. (7.6 m)	Surface or flush mounting	87- 18286A46	642
"Y" Harness for trim switches above	Allows tee-in of bow PT switch with remote controls	84-889295T	642
Lanyard Stop Switch, single engine	Flush mounted	87- 19674A07	627
	Chrome bezel mounted	87- 19674A08	627
Lanyard Stop Switch, dual engines	Flush mounted	87- 19674A12	627
	Chrome bezel mounted	87- 19674A13	627
Battery Isolator	95 amp rated for 1 alternator & 2 batteries	8M6001343	646
	8M0045743 required to complete installation		
	Fuel Line Assemblies, Tanks & Hardware (new Low Permeation hoses shown below)		
Fuel Filter	In-Line filter	35-879885Q	234
Fuel Line 100 ft. (30.5m) - (low permeation)	5/16 ID	32-8M0038500	74
Fuel Line 100 ft. (30.5m) - (low permeation)	3/8 ID	32-8M0038563	74
Fuel Line Coupler	Barbed ends, couples 3/8 ID line to 5/16 ID line	22-8M0001721	78
Fuel Tank (US-EPA) 6.6 gal. Box Style	US-EPA 2011 Compliant	1200-8M0054600	70
Fuel Tank (US-EPA) 6.6 gal. Suitcase Style	US-EPA 2011 Compliant	1200-8M0045691	70
Fuel Tank (non-US) 6.6 gal. (25 L) Box Style	Quick connect fuel line connection/integral gauge	1200-8M0083451	
Fuel Tank (non-US) 6.6 gal. Suitcase Style	Quick connect fuel line connection/integral gauge	1200-8M0083452	
Connector Kit - QS branded	Contains on-engine and mating fuel line connector	22-804787Q	77

Description		Part Number	Page
Connector Kit - MPP branded	Contains on-engine and mating fuel line connector	22-804787T	77
	Miscellaneous Accessories		
Oil Filter - QS	Requires 91-889277Q01 or K01 filter wrench	35-877761Q01	299
Oil Filter - MPP	Requires 91-889277Q01 or K01 filter wrench	35-877761K01	262
Oil Filter Wrench - QS	Fits the 35-877761 series filter	91-889277Q01	340
Oil Filter Wrench - MPP	Fits the 35-877761 series filter	91-889277K01	340
Crankcase Oil Pump		802889Q 1	338
Oil Pump Extraction Tube	Required with pump above	32-859717A 2	338
Tiller Handle Kit		816366A52	46
Big Tiller	Mechanical Non-Power Steering Version	8M0093581	48, 655
Big Tiller	Mechanical Power Steering Version	8M0094637	48, 655
Big Tiller throttle/shift cable kit	Required for either version	897978K01	49, 656
Replacement Skeg		15985A02	185, 1026
Driveshaft Extension Kit - 5 inch	Converts 20 inch (508 mm) to 25 inch (635 mm)	12092A19	58
Tilt Limit Switch Kit	Analog device	899625K02	640
	Digital device	899625K04	640
Flushing Attachment - allows running engine - QS		44357Q 2	170
Flushing Attachment - allows running engine - MPP		44357T 2	170
Coastal Flush Kit		858566A03	69
Rigging Tube Kit	Includes 5 ft. of 2 inch tube, clamp & transom fit	32-825191A03	56, 541
	Steering - Mechanical		
Link Rod Attaching Kit	Used with starboard entry attaching cables	92876A12	705
Ride Guide Attaching Kit	Single Engine - Two Cable	92876A 8	707
	Dual Engine - Two Cable	92876A 9	708
	Steering - Hydraulic		
Hydraulic Helms	Standard 1.4L Helm w/fluid & mtg. hdwe.	8M0050098	675
	Tilt Helm w/fluid & mtg. hdwe.	8M0050099	675
Remote Fill Kit	Use with Tilt Helm Kit	64-889934A05	678
Hydraulic Hoses	Cylinder to Helm	32-8M0053474 thru 8M0053491	677
Hydraulic Cylinder - Standard Rotation		8M0054993	674

75-90-115 Hp FourStroke (Standard Models, non-SeaPro and non-ProXS) 2B094996 and Up

Description		Part Number			Page
	Controls				
Side Mount - MSC 4000 Series - Electric w/trim	15 ft. (4.6 m) harness	8M0083666			525
	20 ft. (6.1 m) harness	8M0083667			525
	Extra 6 ft. extension (10 pin)	84-8M0058668			526
Dual Engine Remote Control Kit	Used with side mount controls	16909A 2			528
Panel Mount (with trim) - MPC 4000 Series (Gen II)	Finger Release - Black Handle	8M0011213			521
	Finger Release - Black Handle	8M0030550			522
	Lock Bar	883710A02			522
Console Mount (single eng. with trim) - Commander		88688A25			529
Console Mount (single eng. with trim) - MCC 4500	Gen II	8M0059686			523
Console Mount (dual eng. with trim) - Commander	Twin trim switches in handle	88688A22			529
Console Mount (dual eng. with trim) - MCC 4500	(Gen II) - single trim switch in handle	8M0075245			524
Throttle/Shift Cables (two per engine) - (Gen I)	Premium	897977A03	thru	897977A50	545
Throttle/Shift Cables (two per engine) - (Gen II)	Premium	897978A03	thru	897978A50	549
	Analog Instrumentation				
75/80 WOT = 4500-5500 RPMs 90/100/115 hp. WOT = 5000-6000 RPM's					
Tachometer - 8000 RPM - Flagship	Black Face (setting 6P)	79-895283A06			466
	White Face (setting 6P)	79-895283A26			471
Tachometer - 8000 RPM - Admiral	Black Face (setting 6P)	79-895283Q06			480
	White Face setting (6P)	79-895283Q26			488
Tachometer - 7000 RPM - Flagship	Black Face (setting 6P)	79-895283A05			466
	White Face (setting 6P)	79-895283A25			471
Tachometer - 7000 RPM - Admiral	Black Face (setting 6P)	79-895283Q05			479
	White Face (setting 6P)	79-895283Q25			488
Tachometer Harness - Analog - 5 ft.	Use with 14 pin Side Mount controls or harnesses.	84-892990T01			603
- Analog - 10 ft.	Use with 14 pin Side Mount controls or harnesses.	84-892990T10			603
- Analog - 15 ft.	Use with 14 pin Side Mount controls or harnesses.	84-892990T15			603
Speedometer - 65 MPH - Flagship	Black Face	79-895285A03			466
	White Face	79-895285A23			471
Speedometer - 65 MPH - Admiral	Black Face	79-895285Q03			480
	White Face	79-895285Q23			488
Battery Meter - Flagship	Black Face	79-895286A01			467
	White Face	79-895286A21			472
Battery Meter - Admiral	Black Face	79-895286Q01			481
	White Face	79-895286Q21			489
Fuel Gauge - Flagship	Black Face	79-895291A01			469
	White Face	79-895291A21			474

Description		Part Number	Page
Fuel Gauge - Admiral	Black Face	79-895291Q01	482
	White Face	79-895291Q21	491
Cruiselog (hour meter) - Flagship	Black Face	79-895295A01	470
	White Face	79-895295A21	475
Cruiselog (hour meter) - Admiral	Black Face	79-895295Q01	483
	White Face	79-895295Q21	491
Power Trim - Flagship	Black Face	79-895292A01	470
	White Face	79-895292A21	474
Power Trim - Admiral	Black Face	79-895292Q01	483
	White Face	79-895292Q21	491
Power Trim Sender Kit	(equipped on engine from factory)	8M0074845	
Water Pressure Gauge - 40 PSI - Flagship	Black Face	79-895288A05	469
	White Face	79-895288A25	473
Water Pressure Gauge - 40 PSI - Admiral	Black Face	79-895288Q05	482
	White Face	79-895288Q25	490
Water Pressure Fitting	Kit to connect to analog gauge	32-8M0088855	500
(Verify engine for suitability of product)	SmartCraft Instrumentation		
SmartCraft Sensor Kits	Pitot Sensor Kit	8M0090447	594
	Water Pressure Digital Kit	8M0089111	
SC1000 System Monitor - Front Mount	Rectangular	79-879896K21	435
SC1000 System Monitor - Rear Mount	Rectangular	79-879896K19	435
SC1000 System Monitor - Front Mount	Round - Black	79-892219K19	435
	Round - White	79-892219K20	435
MercMonitor - NMEA 2000	Gateway Level 1 ECO Screen	79-8M0079864	434
	Gateway Level 2 SmartTow RPM, ECO Screen	79-8M0079865	434
	Gateway Level 3 SmartTow Pro, ECO Screen	79-8M0079866	434
	Gateway Level 3 SmartTow Pro w/GPS puck, ECO Screen	79-8M0079867	434
	ECO Screen only	79-8M0062377	434
SC1000 Black - Glass Lens	Bezels must be ordered separately		
	Glass Lens, 7,000 Tach	79-8M0079894	411
	Glass Lens, Single Engine Kit	79-8M0079889	412
	Glass Lens, Dual Engine Kit	79-8M0079887	412
SC1000 White - Glass Lens	Bezels must be ordered separately		
	Glass Lens, 7,000 Tach	79-8M0079892	410
	Glass Lens, Single Engine Kit	79-8M0079880	410
	Glass Lens, Dual Engine Kit	79-8M0079881	411
SC1000 Gray - Glass Lens	Bezels must be ordered separately		
	Glass Lens, 7,000 Tach	79-8M0079897	413
	Glass Lens, Single Engine Kit	79-8M0079900	413
	Glass Lens, Dual Engine Kit	79-8M0079901	414

Description		Part Number	Page
VesselView 4		8M0074096	406
VesselView 7		8M0074095	406
	Electrical		
Ignition/Choke Assembly - 2 ft. (.61 m) harness	with keyswitch	84-896537K02	617
Ignition/Choke Assembly - 8 ft. (2.4 m) harness	with keyswitch	84-896537K08	617
Ignition/Choke Assembly - 11 ft. (3.3 m) harness	with keyswitch	84-896537K11	617
Ignition/Choke Assembly - 15 ft. (4.6 m) harness	with keyswitch	84-896537K15	617
Ignition/Choke Assembly - 20 ft. (6.1 m) harness	with keyswitch	84-896537K20	618
Ignition/Choke Assembly - 25 ft. (6.1 m) harness	with keyswitch	84-896537K24	618
Power Trim Switch Kit - 10 ft. (3.0 m)	Surface or flush mounting	87- 18286A47	642
Power Trim Switch Kit - 25 ft. (7.6 m)	Surface or flush mounting	87- 18286A46	642
"Y" Harness for trim switches above	Allows tee-in of bow PT switch with remote controls	84-889295T	642
Lanyard Stop Switch, single engine	Flush mounted	87- 19674A07	627
	Chrome bezel mounted	87- 19674A08	627
Lanyard Stop Switch, dual engines	Flush mounted	87- 19674A12	627
	Chrome bezel mounted	87- 19674A13	627
Battery Isolator	95 amp rated for 1 alternator & 2 batteries	8M6001343	646
	8M0045743 required to complete installation		
	Fuel Line Assemblies, Tanks & Hardware (new Low Permeation hoses shown below)		
Low Pressure In-line Fuel Filter	Located under cowl	35-879885K	235
Water Separating Fuel Filter Kit	Located in boat, provides warning signal	8M0109543	82
Fuel Line 100 ft. (30.5m) - (low permeation)	5/16 ID	32-8M0038500	74
Fuel Line 100 ft. (30.5m) - (low permeation)	3/8 ID	32-8M0038563	74
Fuel Line Coupler	Barbed ends, couples 3/8 ID line to 5/16 ID line	22-8M0001721	78
Fuel Tank (US-EPA) 6.6 gal. Box Style	US-EPA 2011 Compliant	1200-8M0054600	70
Fuel Tank (US-EPA) 6.6 gal. Suitcase Style	US-EPA 2011 Compliant	1200-8M0045691	70
Fuel Tank (non-US) 6.6 gal. (25 L) Box Style	Quick connect fuel line connection/integral gauge	1200-8M0083451	
Fuel Tank (non-US) 6.6 gal. Suitcase Style	Quick connect fuel line connection/integral gauge	1200-8M0083452	
Primer Bulb Assembly	Not used with this system		
Connector Kit - MPP branded	Contains on-engine and mating fuel line connector	22-804787T	77
	Miscellaneous Accessories		
Oil Filter - MPP		35-8M0065104	262
Oil Filter Wrench - MPP		91-802653K02	339
Crankcase Oil Pump		802889Q 1	338
Oil Pump Extraction Tube	Required with pump above	32-859717A 2	338
Big Tiller	Mechanical Non-Power Steering Version	8M0093581	48, 655
Big Tiller	Mechanical Power Steering Version	8M0094637	48, 655

Description		Part Number	Page
Big Tiller throttle/shift cable kit	Required for either version	897978K01	49, 656
Replacement Skeg	Standard gearcase	8M0090442	94
	Command Thrust gearcase	8M0060147	94, 1027
Driveshaft Extension Kit - Standard gearcase	Converts 20 inch (508 mm) to 25 inch (635 mm)	8M0105089	58
Driveshaft Extension Kit - Command Thrust	Converts 20 inch (508 mm) to 25 inch (635 mm)	8M0105090	59
Steering Trim Tab - Standard Gearcase		8M0091534	233
Tilt Converter/Limit Switch Kit	Provides digital trim signal AND limits trim range	8M0087542	504
Flushing Attachment - allows running engine - QS		44357Q 2	170
Flushing Attachment - allows running engine - MPP		44357T 2	170
Rigging Tube Kit	Includes 5 ft. of 2 inch tube, clamp & transom fit	32-825191A03	56, 541
	Steering - Mechanical		
Link Rod Attaching Kit	Used with starboard entry attaching cables	92876A12	705
Ride Guide Attaching Kit	Single Engine - Two Cable	92876A 8	707
	Dual Engine - Two Cable	92876A 9	708
	Steering - Hydraulic		
Hydraulic Helms	Standard 1.4L Helm w/fluid & mtg. hdwe.	8M0050098	675
	Tilt Helm w/fluid & mtg. hdwe.	8M0050099	675
Remote Fill Kit	Use with Tilt Helm Kit	64-889934A05	678
Hydraulic Hoses	Cylinder to Helm	32-8M0053474 thru 8M0053491	677
Hydraulic Cylinder - Standard Rotation		8M0054993	674

150 EFI FourStroke (Standard Models, non-SeaPro and non ProXS) 1B905505 & above

Description		Part Number	Page
	Controls		
Side Mount - MSC 4000 Series - Electric w/trim	15 ft. (4.6 m) harness	8M0083666	525
	20 ft. (6.1 m) harness	8M0083667	525
	Extra 6 ft. extension (10 pin)	84-8M0058668	526
Dual Engine Remote Control Kit	(for side mount control stacking)	16909A 2	528
Panel Mount (with trim) - MPC 4000 Series (Gen II)	Finger Release - Black Handle	8M0011213	521
	Finger Release - Chrome Handle	8M0030550	522
	Lock Bar	883710A02	522
Console Mount (single eng. with trim) - Commander		88688A25	529
Console Mount (single eng. with trim) - MCC 4500	Gen II	8M0059686	523
Console Mount (dual eng. with trim) - Commander	Twin trim switches in handle	88688A22	529
Console Mount (dual eng. with trim) - MCC 4500	(Gen II) - single trim switch in handle	8M0075245	524

Description		Part Number			Page
Throttle/Shift Cables (two per engine) - (Gen I)	(Premium Series)	897977A03	thru	897977A50	545
Throttle/Shift Cables (two per engine) - (Gen II)	(Premium Series)	897978A03	thru	897978A50	549
Xtreme Cables (two per engine) - (Gen II)	Gen II - 5 ft. to 40 ft.	8M0059850	thru	8M0059880	554
Xtreme Cables (two per engine) - (Gen I)	Gen I - 5 ft. to 36 ft.	8M0059882	thru	8M0059910	553
	Instrumentation - Analog Gauges				
150 HP. Max WOT Range = 5,000-5,800 RPM's					
Analog Gauge Interface	Required for analog water temp or analog oil pressure	892486K08			463
	Trim Sensor Converter not required if AGI is used				
Service Monitor	Apply 3 wraps for proper operation	79-8M0050399			507
Tachometer - 7000 RPM - Flagship	Black Face	79-895283A05			466
	White Face	79-895283A25			471
Tachometer - 7000 RPM - Admiral	Black Face	79-895283Q05			479
	White Face	79-895283Q25			488
Tachometer - 6000 RPM - Flagship	Black Face	79-895283A03			466
	White Face	79-895283A23			471
Tachometer - 6000 RPM - Admiral	Black Face	79-895283Q03			479
	White Face	79-895283Q23			488
Tachometer Harness - Analog	5 ft. length x 14 pin	84-892990T01			603
	10 ft. length x 14 pin	84-892990T10			603
	15 ft. length x 14 pin	84-892990T15			603
Speedometer - 80 MPH - Flagship	Black Face	79-895285A04			467
	White Face	79-895285A24			471
Speedometer - 80 MPH - Admiral	Black Face	79-895285Q04			480
	White Face	79-895285Q24			488
Speedometer - 65 MPH - Flagship	Black Face	79-895285A03			466
	White Face	79-895285A23			471
Speedometer - 65 MPH - Admiral	Black Face	79-895285Q03			480
	White Face	79-895285Q23			488
Battery Meter - Flagship	Black Face	79-895286A01			467
	White Face	79-895286A21			472
Battery Meter - Admiral	Black Face	79-895286Q01			481
	White Face	79-895286Q21			489
Fuel Gauge - Flagship	Black Face	79-895291A01			469
	White Face	79-895291A21			474
Fuel Gauge - Admiral	Black Face	79-895291Q01			482
	White Face	79-895291Q21			491
Cruiselog (hour meter) - Flagship	Black Face	79-895295A01			470
	White Face	79-895295A21			475
Cruiselog (hour meter) - Admiral	Black Face	79-895295Q01			483
	White Face	79-895295Q21			491

Description		Part Number	Page
Trim Sensor Converter	Converts digital trim signal to analog	8M0059529	503
Power Trim - Flagship - Analog	Black Face - Converter or AGI required	79-895292A01	470
	White Face - Converter or AGI required	79-895292A21	474
Power Trim - Admiral - Analog	Black Face - Converter or AGI required	79-895292Q01	483
	White Face - Converter or AGI required	79-895292Q21	491
Water Pressure Fitting Kit	Fitting to connect to engine block	32-8M0063663	
Water Pressure Gauge - 30 PSI - Flagship	Black Face	79-895288A03	468
	White Face	79-895288A23	473
Water Pressure Gauge - 30 PSI - Admiral	Black Face	79-895288Q03	482
	White Face	79-895288Q23	490
Water Temperature Gauge (100-240 deg. F) - Flagshi	Black Face - requires AGI	79-895287A01	468
	White Face - requires AGI	79-895287A21	472
Water Temperature Gauge (100-240 deg. F) - Admiral	Black Face - requires AGI	79-895287Q01	481
	White Face - requires AGI	79-895287Q21	489
Dual Engine Synchronizer - Flagship	Black Face	79-895294A01	469
	White Face	79-895294A21	474
Dual Engine Synchronizer - Admiral	Black Face	79-895294Q01	483
	White Face	79-895294Q21	491
	Instrumentation - SmartCraft Gauges		
MercMonitor - NMEA 2000	Gateway Level 1 ECO Screen	79-8M0079864	434
	Gateway Level 2 SmartTow RPM, ECO Screen	79-8M0079865	434
	Gateway Level 3 SmartTow Pro, ECO Scren	79-8M0079866	434
	Gateway Level 3 SmartTow Pro w/GPS puck, ECO Screen	79-8M0079867	434
	ECO Screen only	79-8M0062377	434
VesselView 4		8M0074096	406
VesselView 7		8M0074095	406
SC1000 - Black	Bezels must be ordered separately		
	Glass Lens 7,000 Tach	79-8M0079894	411
	Glass Lens, Single Engine Kit	79-8M0079889	412
	Glass Lens, Dual Engine Kit	79-8M0079887	412
SC1000 - White	Bezels must be ordered separately		
	Glass Lens 7,000 Tach	79-8M0079892	410
	Glass Lens, Single Engine Kit	79-8M0079880	410
	Glass Lens, Dual Engine Kit	79-8M0079881	
SC1000 - Gray	Bezels must be ordered separately		
	Glass Lens 7,000 Tach	79-8M0079897	413
	Glass Lens, Single Engine Kit	79-8M0079900	413
	Glass Lens, Dual Engine Kit	79-8M0079901	414
SmartCraft Pitot Sensor Kit	Components to use Pitot for Speed	8M0059530	464
SmartCraft Water Pressure Fitting Kit	Components to display water pressure	8M0059531	500

Description		Part Number	Page
	Electrical		
Ignition/Choke Assembly - 2 ft. (609 mm) harness		84-896537K02	617
Ignition/Choke Assembly - 8 ft. (2.44 m) harness		84-896537K08	617
Ignition/Choke Assembly - 11 ft. (3.35 m) harness		84-896537K11	617
Ignition/Choke Assembly - 15 ft. (4.6 m) harness		84-896537K15	617
Ignition/Choke Assembly - 20 ft. (6.1 m) harness		84-896537K20	618
Ignition/Choke Assembly - 25 ft. (7.62 m) harness	Single harness	84-896537K24	618
Ignition/Choke Assembly - 25 ft. (7.62 m) harnesses	Two harnesses	84-896537K25	618
Ignition/Choke Assembly - 30 ft. (9.14 m) harness	Single harness	84-896537K29	618
Ignition/Choke Assembly - 30 ft. (9.14 m) harnesses	Two harnesses	84-896537K30	618
Lanyard Stop Switch, single engine	Flush mounted	87- 19674A07	627
	Chrome bezel mounted	87- 19674A08	627
Lanyard Stop Switch, dual engine	Flush mounted	87- 19674A12	627
	Chrome bezel mounted	87- 19674A13	627
Lanyard Stop Switch, triple or quad	Flush mounted	87- 19674A14	628
	Chrome bezel mounted	87- 19674A15	628
Diode Assembly - dual engine	(required to use a single lanyard)	84-898289A72	628
	Fuel Line Assemblies, Tanks & Hardware (Low Permeation hoses shown below)		
Low Pressure Inline Fuel Filter	Located under cowl	35-879885Q	234
High Pressure Inline Fuel Filter	Located under cowl	35-8M0057677	234
Water Separating Fuel Filter Kit	Locate in boat, provides warning signal	8M0109543	82
Bulk Fuel Line - (low permeation)	5/16 ID - no bulb or ends - 100 ft.	32-8M0038500	74
	3/8 ID - no bulb or ends - 100 ft.	32-8M0038563	74
Fuel Line Connector	3/8 to 5/16	22-8M0001721	78
Primer Bulb	Not used with this system	N/A	
Fuel Tank (US-EPA) 6.6 gal. Box Style	US-EPA 2011 Compliant	1200-8M0054600	70
Fuel Tank (US-EPA) 6.6 gal. Suitcase Style	US-EPA 2011 Compliant	1200-8M0045691	70
Fuel Tank (non-US) 6.6 gal. (25 L) - Plastic Box Style	Quick connect fuel line connection/integral gauge	1200-8M0083451	
Fuel Tank (non-US) 6.6 gal. - Plastic Suitcase Style	Quick connect fuel line connection/integral gauge	1200-8M0083452	
	Miscellaneous Accessories		
Oil Filter		35-877761K01	262
Oil Filter Wrench		91-889277K01	340
Replacement Skeg		8M0060147	94, 1027
Driveshaft Extension Kit	Converts an X model to an XL	8M0105087	59
Rigging Hose Kit	Includes new grommet 8M0062583	32-8M0062693	56, 541
Trim Limit Switch Kit - electronic switch style	Analog device	8M0059532	641
Big Tiller	Mechanical Power Steering Version	8M0061721	48, 655

Description		Part Number			Page
Big Tiller throttle/shift cable kit	Required	8M0061103			49, 656
Big Tiller Auxiliary Light	Optional	897978T02			50, 657
RPM Adjuster	Optional	87-8M0083437			49, 643
Theft Deterrent System	Engine Immobilizer	8M0057383			632
Moving Prop Alert	MP Alert - 1 Light indicates moving prop	8M0074744			508
	MP Alert - 2 Lights indicates moving prop	8M0074746			
MP Alert Switch Kit	Allows control of lights w/switch on dash	8M0052292			509
MP Alert Add-a-Light	Additional lights may be added to system	8M0078924			
Jet Pump	Rated 110 HP	67-8M0064433			
Flushing Attachment - allows running engine - Q/S	(not for use with Jet)	44357Q 2			170
Flushing Attachment - allows running engine - MPP	(not for use with Jet)	44357T 2			170
	Hydraulic Steering				
Hydraulic Steering - Dual Engine	Standard Helm without hoses	8M0056139			676
	Tilit Helm without hoses	8M0056140			676
	Standard Cylinder	8M0050097			676
	Port Cylinder	8M0056145			676
Hydraulic Hoses	2 to 30 foot lengths	32-8M0053474	thru	8M0053491	677
	Power Steering				
Power Steering - Multiple Engines	Standard Helm without hoses	892380K05	thru	892380K12	657
	Tilt Helm without hoses	892560K31	thru	892560K35	657
	Standard Cylinder	898349A11			661
	Counter Rotation Cylinder	898349A14			662
Power Steering Hoses (Pump)	2 to 30 ft. lengths	32-892438K02	thru	892438K30	666
Dual Engine Tie Bars	Single Cylinder Tie Bars - 26, 28, 30, 32, 34 inch lengths	64-8M0063473	thru	8M0063477	671

135-150-175-200 (4 Cylinder) Verado 1B311420 & up

Description		Part Number	Page
	Rigging Kits for Verado DTS Engines		
Panel Mount - Chrome - Master Rigging Kit	Single Engine	892984K31	561
Panel Mount - Black - Master Rigging Kit	Single Engine	892984K32	561
Slim Binnacle - Chrome	Single Engine	896609K31	
Slim Binnacle - Black	Single Engine	896609K32	
Console Mount - Chrome - Master Rigging Kit	Single Engine	877775K48	
Console Mount - Black - Master Rigging Kit	Single Engine	877775K48	
Console Mount - Chrome - Master Rigging Kit	Dual Engine	8M0079499	561
Console Mount - Black - Master Rigging Kit	Dual Engine	877775K31	

Description		Part Number	Page
	Controls		
Panel Mount - Chrome - Single Engine	(included in Master Kits above)	892984A01	515
Panel Mount - Black - Single Engine	(included in Master Kits above)	892984A02	515
Slim Binnacle - Chrome	(included in Master Kit above)	896609A01	
Slim Binnacle - Black	(included in Master Kit above)	896609A02	
Console Mount - Chrome - Single Engine	(included in Master Kits above)	N.L.A.	
Console Mount - Black - Single Engine	(included in Master Kits above)	877775A12	
Console Mount - Chrome - Dual Engine	(included in Master Kits above)	877775A19	
Console Mount - Black - Dual Engine	(included in Master Kits above)	877775A11	
DTS Foot Throttle Control Kit	Hot Foot	893359K03	515
	Instrumentation - Analog Gauges		
135 Hp. Max WOT Range = 5200-6400 RPM's 150/175/200 Max WOT = 5,800-6.400 RPM's			
Analog Gauge Interface	Converts digital signal for use of analog gauges	892486K08	463
	Instrumentation - SmartCraft (Verify engine for suitability of product.)		
SC1000 System Monitor - Front Mount	Rectangular	79-879896K21	435
SC1000 System Monitor - Rear Mount	Rectangular	79-879896K19	435
SC1000 System Monitor - Front Mount	Round - Black	79-892219K19	435
SC1000 System Monitor - Front Mount	Round - White	79-892219K20	435
SC1000 Black - Glass Lens	Bezels must be ordered separately		
	Glass Lens 7,000 Tach	79-8M0079894	411
	Glass Lens, Single Engine Kit	79-8M0079889	412
	Glass Lens, Dual Engine Kit	79-8M0079887	412
SC1000 White - Glass Lens	Bezels must be ordered separately		
	Glass Lens 7,000 Tach	79-8M0079892	410
	Glass Lens, Single Engine Kit	79-8M0079880	410
	Glass Lens, Dual Engine Kit	79-8M0079881	411
SC1000 Gray - Glass Lens	Bezels must be ordered separately		
	Glass Lens 7,000 Tach	79-8M0079897	413
	Glass Lens, Single Engine Kit	79-8M0079900	413
	Glass Lens, Dual Engine Kit	79-8M0079901	414
MercMonitor	Gateway Level 1 ECO Screen	79-8M0079864	434
	Gateway Level 2 SmartTow RPM, ECO Screen	79-8M0079865	434
	Gateway Level 3 SmartTow Pro, ECO Screen	79-8M0079866	434
	Gateway Level 3 SmartTow Pro w/GPS puck, ECO Screen	79-8M0079867	434
	ECO Screen only	79-8M0062377	434

Description		Part Number	Page
VesselView 4		8M0074096	406
VesselView 7		8M0074095	406
	Electrical		
Start/Stop Switch - Single Engine		887767K01	619
Start/Stop Switch - Dual Engine		887767K02	620
Key Switch - DTS - 3 position	Single	87-897716K01	615
Key Switch - DTS - 3 position	Dual	87-897716K02	615
3 position switch housing		879305A01	616
Key Switch - DTS - 4 position	(no cover or bezel)	87-893353A02	614
	(includes key cover & bezel)	87-893353A03	614
	Matched Keys - Dual	87-893353A04	614
	Matched Keys - Triple	87-893353A05	615
DTS Command Module Kit	Panel Mount - Single	84-893377K04	562
	Console/Zero Effort - Single	84-892955K04	563
	Console/Zero Effort - Dual	84-893378K04	564
	Slim Binnacle	84-896372K02	563
14 Pin Data Cable	From engine to helm	84-892451T06 thru 84-892451T40	605
Lanyard Stop Switch, single engine	Flush mounted	87- 19674A07	627
	Chrome bezel mounted	87- 19674A08	627
Lanyard Stop Switch, dual engines	Flush mounted	87- 19674A12	627
	Chrome bezel mounted	87- 19674A13	627
Lanyard Stop Switch, triple or quad	Flush mounted	87- 19674A14	628
	Chrome bezel mounted	87- 19674A15	628
Accessory Power Harness Kit		84-899785K04	613
	Fuel Line Assemblies, Tanks & Hardware (new Low Permeation hose shown below)		
Fuel Filter	Cartridge Element	35-8M0060041	241
Fuel Filter	In-line	35-879885Q	234
Water Separating Fuel Filter Kit	Vessel mounted, provides warning signal	35-8M0113498	82
Fuel Line - (low permeation)	3/8 inch Fuel Line Required	32-8M0038563	74
	Miscellaneous Accessories		
Oil Filter - QS		35-877767Q01	299
Oil Filter - MPP		35-877767K01	263
Rigging Hose Kit		32-825191A03	56, 541
Trailering Clip		833006A 1	36
Battery Cable Set	1 Pos -1 Neg - 12 ft.	84- 88439A50	37, 645

Description		Part Number			Page
Big Tiller	DTS Power Steering Version	8M0098585			48, 655
Tilt Limit Switch Kit	Digital device	899625K05			640
Gearcase Replacement Skeg	Fits the 4.80 torpedo gearcase	898245A01			93, 1027
Flushing Attachment - allows running engine - Q/S	(not for use with Jet)	44357Q 2			170
Flushing Attachment - allows running engine - MPP	(not for use with Jet)	44357T 2			170
Dual Water Pickup Flush Seal Kit - Q/S		881150Q 1			170
Dual Water Pickup Flush Seal Kit - MPP		881150K 1			170
	Hydraulic Steering				
Hydraulic Helms	Standard 1.5L Helm w/ fluid & mtg. hdwe.	8M0056139			676
	Tilt Helm w/ fluid & mtg. hdwe.	8M0056140			676
Remote Fill Kit	Use with Tilt Helm Kit	64-889934A05			678
Hydraulic Hoses	Cylinder to Helm	32-8M0053474	thru	8M0053491	677
Steering Cylinder - Standard Rotation	Used on hydraulic or power steering systems	8M0050097			676
Steering Cylinder - Counter Rotation	Used on hydraulic or power steering systems	8M0056145			676
	Power Steering - Optional				
Power Steering Primer Module		91-895040K01			665
Power Steering Rigging Kit, Single Engine	Standard w/pump, signal harness & helm, 4 ft. (optional lengths available)	892380K05			657
	Tilt w/pump, signal harness & helm, 4 ft. (optional lengths available)	892560K35			657
Power Steering Rigging Kit, Dual Engines	Standard w/pump, signal harness & helm, 4 ft. (optional lengths available)	892380K36			658
	Tilt w/pump, signal harness & helm, 4 ft. (optional lengths available)	892560K56			658
Steering Helm - Standard	Single (included in kit above)	892380A02			659
Steering Helm - Tilt	Single (included in kit above)	8M0030272			660
Power Steering Kicker Kit		897478K02			647
Power Steering Module (pump & motor)	(with 4 ft. battery leads)	8M0080199			662
	(with 12 ft. battery leads)	892440A18			
	(with 24 ft. battery leads)	8M0080201			663
Multiple Battery Fuse Harness Assembly	50 amp power steering fuse circuit	84-898289T77	thru	84-898289T79	663
Power Steering Signal Harness - 10 ft.	Multiple engines require 1 harness per engine	84-893371T10			665
Power Steering Signal Harness - 20 ft.	Multiple engines require 1 harness per engine	84-893371T20			665
Power Steering Signal Harness - 30 ft.	Multiple engines require 1 harness per engine	84-893371T30			665
Power Steering Signal Y Harness	Dual Engine	84-892868T01			664
	Triple Engine	84-892868T02			664
Power Steering Hose Kit	Cylinder to Helm	32-8M0046914	thru	32-8M0046928	666
	Power Module to Helm	32-892438K02	thru	32-892438K24	666
	Pressure Hose - Dual Station	32-892825008	thru	32-892825026	667

Description		Part Number			Page
Steering Cylinder - Standard Rotation	Used on hydraulic or power steering systems	898349A11			661
Steering Cylinder - Counter Rotation	Used on hydraulic or power steering systems	898349A14			662
	Dual Engine & Kicker Tie Bars (Common to both Hydraulic and Power Steering Options)				
Dual Engine Tie Bars	Single Cylinder - Dual Engine	64-8M0063473	thru	8M0063477	671
	Dual Cylinders - Dual Engines	64-892789Q22	thru	64-892789Q27	672
Kicker Tie Bar	Port engine mount	898370A03			673
	Starboard engine mount	898966A02			673

200-225-250-275-300 (6 cyl) Verado 1B390143 & up

Description		Part Number			Page
	Rigging Kits for Verado DTS Engines				
Panel Mount - Chrome - Master Rigging Kit	Single Engine	892984K31			561
Panel Mount - Black - Master Rigging Kit	Single Engine	892984K32			561
Slim Binnacle - Chrome	Single Engine	896609K31			
Slim Binnacle - Black	Single Engine	896609K32			
Console Mount - Chrome - Master Rigging Kit	Single Engine	877775K48			
Console Mount - Chrome - Master Rigging Kit	Dual Engine	8M0079499			561
Console Mount - Black - Master Rigging Kit	Dual Engine	877775K31			
Triple Engine - Shadow Mode	Includes Control	877775K35			
Triple Engine - DTS Rigging Kit	Zero Effort control must be ordered separately	892955K32			564
Quad Engine - Shadow Mode		877775K17			
	Controls				
Panel Mount - Chrome - Single Engine	(included in Master Kits above)	892984A01			515
Panel Mount - Black - Single Engine	(included in Master Kits above)	892984A02			515
Console Mount - Chrome - Single Engine	(included in Master Kits above)	877775A23			
Console Mount - Black - Single Engine	(included in Master Kits above)	877775A12			
Console Mount - Chrome - Dual Engine	(included in Master Kits above)	877775A19			
Console Mount - Black - Dual Engine	(included in Master Kits above)	877775A11			
Triple Engine - Shadow Mode	(included in Master Kit above)	877775A21			
Zero Effort Control - 2 Lever	Order to complete Master Kit	NLA	thru	NLA	
Zero Effort Control - 4 Lever	Order to complete Master Kit	840714A 1	thru	840714A24	
Zero Effort Control - 6 Lever	Order to complete Master Kit	840716A 2	thru	840716A19	
DTS Foot Throttle Control Kit	Hot Foot, MY2007 and newer	893359K03			515

Description		Part Number	Page
	Instrumentation - Analog Gauges		
All Models Max WOT Range = 5,800-6,400 RPM's			
Analog Gauge Interface	Converts digital signal for use of analog gauges	892486K08	463
	Instrumentation - SmartCraft (Verify engine for suitability of product.)		
SC1000 System Monitor - Front Mount	Rectangular	79-879896K21	435
SC1000 System Monitor - Rear Mount	Rectangular	79-879896K19	435
SC1000 System Monitor - Front Mount	Round - Black	79-892219K19	435
SC1000 System Monitor - Front Mount	Round - White	79-892219K20	435
SC1000 Black - Glass Lens	Bezels must be ordered separately		
	Glass Lens 7,000 Tach	79-8M0079894	411
	Glass Lens, Single Engine Kit	79-8M0079889	412
	Glass Lens, Dual Engine Kit	79-8M0079887	412
SC1000 - White - Glass Lens	Bezels must be ordered separately		
	Glass Lens 7,000 Tach	79-8M0079892	410
	Glass Lens, Single Engine Kit	79-8M0079880	410
	Glass Lens, Dual Engine Kit	79-8M0079881	411
SC1000 Gray - Glass Lens	Bezels must be ordered separately		
	Glass Lens 7,000 Tach	79-8M0079897	413
	Glass Lens, Single Engine Kit	79-8M0079900	413
	Glass Lens, Dual Engine Kit	79-8M0079901	414
MercMonitor - NMEA 2000	Gateway Level 1 ECO Scren	79-8M0079864	434
	Gateway Level 2 SmartTow RPM, ECO Screen	79-8M0079865	434
	Gateway Level 3 SmartTow Pro, ECO Scren	79-8M0079866	434
	Gateway Level 3 SmartTow Pro w/GPS puck, ECO Screen	79-8M0079867	434
	ECO Screen only	79-8M0062377	434
VesselView 4		8M0074096	406
Vessel View 7		8M0074095	406
	Electrical		
Start/Stop Switch - Single Engine		887767K01	619
Start/Stop Switch - Dual Engine		887767K02	620
Start/Stop Switch - Triple Engine		887767K03	620
Start/Stop Switch - Quad Starboard		887767K04	620
Start/Stop Switch - Quad Port		887767K05	620
Key Switch - DTS - 3 position	Single	87-897716K01	615
Key Switch - DTS - 3 position	Dual	87-897716K02	615
3 position switch housing		879305A01	616
Key Switch - DTS - 4 position	(no cover or bezel)	87-893353A02	614

Description		Part Number			Page
	(includes key cover & bezel)	87-893353A03			614
	Matched Keys - Dual	87-893353A04			614
	Matched Keys - Triple	87-893353A05			615
	Matched Keys - Quad	87-893353A06			615
Lanyard Stop Switch, single engine	Flush mounted	87- 19674A07			627
	Chrome bezel mounted	87- 19674A08			627
Lanyard Stop Switch, dual engines	Flush mounted	87- 19674A12			627
	Chrome bezel mounted	87- 19674A13			627
Lanyard Stop Switch, triple or quad	Flush mounted	87- 19674A14			628
	Chrome bezel mounted	87- 19674A15			628
DTS Command Module Kit	Panel Mount - Single	84-893377K04			562
	Console/Zero Effort - Single	84-892955K04			563
	Console/Zero Effort - Dual	84-893378K04			564
	Slim Binnacle	84-896372K02			563
	Shadow Mode	84-896377K02			565
	Quad - (requires both harnesses shown)	84-896377K03			565
	Quad - (requires both harnesses shown)	84-892955K05			
On/Off Hot Foot Kit		898259K01			515
14 Pin Data Cable	Standard lengths, 6-40 ft.	84-892451T06	thru	84-892451T40	605
	Long (low loss) lengths, 50-120 ft.	84-898138T50	thru	84-898138T12	
Clean Power Harness - engine to battery	Not included wtih XL or XXL models	84-888416T04			612
Clean Power Harness - battery to helm J box	Not included wtih XL or XXL models	84-888416T07			612
Accessory Power Harness Kit		84-899785K04			613
	Fuel Line Assemblies, Tanks & Hardware (new Low Permeation hose shown below)				
Fuel Filter	Cartridge Element, Gen IV and prior	35-8M0060041			241
Fuel Filter		35-879885Q			234
Water Separating Fuel Filter Kit	Vessel mounted Gen IV and prior	35-8M0114618			82
Water Separating Fuel Filter	Vessel mounted Canister, Gen V and newer	8M0095659			
Fuel Line - (low permeation)	3/8 inch Fuel Line Required	32-8M0038563			74
	Miscellaneous Accessories				
Oil Filter - QS		35-877769Q01			299
Oil Filter - MPP		35-877769K01			263
Gearcase Oil Drain Funnel	Fits XL model only	91-892866A01			299
Rigging Hose Kit		32-825191A03			56, 541
Gearcase Fill Screw, 4.80 Gearcase	(with sealing washer)	10-880717A01			282
Gearcase Fill Screw, 5.44 gearcase	(without sealing washer)	10-8M0071653			
Battery Cable Set	1 Pos -1 Neg - 12 ft.	84- 88439A50			37, 645
Tilt Limit Switch Kit	Digital device	899625K06			640

Description		Part Number			Page
Gearcase Replacement Skeg	Fits the 4.80 Torpedo gearcase	898245A01			93, 1027
Gearcase Replacement Skeg	Fits the 5.44 Torpedo gearcase	8M0052924			93, 1027
Flushing Attachment - allows running engine - Q/S	(not for use with Jet)	44357Q 2			170
Flushing Attachment - allows running engine - MPP	(not for use with Jet)	44357T 2			170
Dual Water Pickup Flush Seal Kit - Q/S		881150Q 1			170
Dual Water Pickup Flush Seal Kit - MPP		881150K 1			170
	Steering				
Power Steering Primer Module		91-895040K01			665
Power Steering Rigging Kit - Single Engine	Standard w/pump, signal harness & helm, 4 ft. shown, other lengths available	892380K05			657
	Tilt w/ pump, signal harness & helm, 4 ft. shown, other lengths available	892560K35			657
Power Steering Rigging Kit - Dual Engine	Standard w/pump, signal harness & helm, 4 ft. shown, other lengths available	892380K36			658
	Tilt w/ pump, signal harness & helm, 4 ft. shown, other lengths available	892560K56			658
Power Steering Rigging Kit - Triple Engine	Standard w/pump, signal harness & helm, 4 ft. shown, other lengths available	892558K33			658
	Tilt w/ pump, signal harness & helm, 4 ft. shown, other lengths available	892516K53			659
Power Steering Rigging Kit - Quad Engine	Standard w/pump, signal harness & helm, 4 ft. shown, other lengths available	N/A			
	Tilt w/ pump, signal harness & helm, 4 ft. shown, other lengths available	892516K63			659
Steering Helm - Standard	Single (included in kit above)	892380A02			659
	Dual Station (included in kit above)	895816A02			660
Steering Helm - Tilt	Single (included in kit above)	8M0030272			660
	Dual Station (included in kit above)	895817A02			661
Power Steering Kicker Kit		897478K01			647
Power Steering Module (pump & motor)	(with 4 ft. battery leads)	8M0080199			662
	(with 12 ft. battery leads)	892440A18			
	(with 24 ft. battery leads)	8M0080201			663
Multiple Battery Fuse Harness Assembly	50 amp power steering circuit	84-898289T77	thru	84-898289T79	663
Power Steering Signal Harness - 10 ft.	Multiple engines require 1 harness per engine	84-893371T10			665
Power Steering Signal Harness - 20 ft.	Multiple engines require 1 harness per engine	84-893371T20			665
Power Steering Signal Harness - 30 ft.	Multiple engines require 1 harness per engine	84-893371T30			665
Power Steering Signal Y Harness	Dual Engine	84-892868T01			664
	Triple Engine	84-892868T02			664
Power Steering Hose Kit	Cylinder to Helm	32-8M0046914	thru	32-8M0046931	666
	Power Module to Helm	32-892438K02	thru	32-892438K24	666
	Pressure Hose - Dual Station	32-892825008	thru	32-892825026	667
Steering Cylinder for Counter Rotation Outboard		896500A01			662
Dual Tie Bar Kit	26 inch to 28 inch center distance	8M0088751			671

Description		Part Number	Page
	28 inch to 30 inch center distance	8M0088752	671
	30 inch to 32 inch center distance	8M0088753	671
	32 inch to 34 inch center distance	8M0088754	671
	34 inch to 36 inch center distance	8M0088755	671
Tie Bar, Add-an-Engine Kit	26 inch to 28 inch center distance	8M0088756	671
	28 inch to 30 inch center distance	8M0088757	671
	30 inch to 32 inch center distance	8M0088758	671
	32 inch to 34 inch center distance	899160A02	671
	34 inch to 36 inch center distance	8M0088761	671
Liquid Tie Bar Kit		893396A02	673
Kicker Bracket Engine Attachment		892822A02	673

QUICK REFERENCE GUIDE-MERCRUISER

QUICK REFERENCE GUIDE-MERCRUISER

QUICK REFERENCE MERCRUISER CHARTS- GAS MODELS

MerCruiser Gas Models

Description		Part Number			Page
	Controls				
Panel Mount (w/o trim) - MPC 4000 Series (Gen II)	Pistol Grip	8M0011215			522
Panel Mount (with trim) - MPC 4000 Series (Gen II)	Pistol Grip	8M0011214			521
	Lock Bar	883710A03			522
Console Mount (single eng. with trim) - Commander		88688A26			529
Console Mount (single eng. w/o trim) - MCC 4500	Gen II	8M0060782			523
Console Mount (single eng. with trim) - MCC 4500	Gen II	8M0060783			524
Console Mount (dual eng. with trim) - Commander	Twin trim switches in handle	88688A23			529
	Single trim switch in handle	88688A94			
Console Mount (dual eng. w/o trim) - MCC 4500		8M0041425			
Console Mount (dual eng. with trim) - MCC 4500	Single trim switch in handle	8M0041428			
Throttle/Shift Cables (two per engine) - (Gen I)	Platinum	897977A03	thru	897977A50	545
Throttle/Shift Cables (two per engine) - (Gen II)	Platinum	897978A03	thru	897978A50	549
	Instrumentation - Analog				
Tachometer - 6000 RPM - Flagship	Black Face	79-895283A03			466
	White Face	79-895283A23			471
	White Face w/Chrome Bezel	79-895283A43			475
Tachometer - 6000 RPM - Admiral	Black Face	79-895283Q03			479
	Black Face w/Chrome Bezel	79-895283Q63			484
	White Face	79-895283Q23			488
Speedometer - 80 MPH - Flagship	Black Face	79-895285A04			467
	White Face	79-895285A24			471
	White Face w/Chrome Bezel	79-895285A44			476
Speedometer - 80 MPH - Admiral	Black Face	79-895285Q04			480
	Black Face w/Chrome Bezel	79-895285Q64			485
	White Face	79-895285Q24			488
Speedometer - 65 MPH - Flagship	Black Face	79-895285A03			466
	White Face	79-895285A23			471
	White Face w/Chrome Bezel	79-895285A43			476
Speedometer - 65 MPH - Admiral	Black Face	79-895285Q03			480
	Black Face w/Chrome Bezel	79-895285Q63			484
	White Face	79-895285Q23			488
Battery Meter - Flagship	Black Face	79-895286A01			467
	White Face	79-895286A21			472
	White Face w/Chrome Bezel	79-895286A41			476
Battery Meter - Admiral	Black Face	79-895286Q01			481
	Black Face w/Chrome Bezel	79-895286Q61			485
	White Face	79-895286Q21			489

Description		Part Number	Page
Fuel Gauge - Flagship	Black Face	79-895291A01	469
	White Face	79-895291A21	474
	White Face w/Chrome Bezel	79-895291A41	478
Fuel Gauge - Admiral	Black Face	79-895291Q01	482
	Black Face w/Chrome Bezel	79-895291Q61	486
	White Face	79-895291Q21	491
Cruiselog (hour meter) - Flagship	Black Face	79-895295A01	470
	White Face	79-895295A21	475
	White Face w/Chrome Bezel	79-895295A41	479
Cruiselog (hour meter) - Admiral	Black Face	79-895295Q01	483
	Black Face w/Chrome Bezel	79-895295Q61	487
	White Face	79-895295Q21	491
Power Trim - Flagship	Black Face	79-895292A01	470
	White Face	79-895292A21	474
	White Face w/Chrome Bezel	79-895292A41	478
Power Trim - Admiral	Black Face	79-895292Q01	483
	Black Face w/Chrome Bezel	79-895292Q61	487
	White Face	79-895292Q21	491
Water Temperature Gauge (100-240 deg. F) - Flagship	Black Face	79-895287A01	468
	White Face	79-895287A21	472
	White Face w/Chrome Bezel	79-895287A41	477
Water Temperature Gauge (100-240 deg. F) - Admiral	Black Face	79-895287Q01	481
	Black Face w/Chrome Bezel	79-895287Q61	485
	White Face	79-895287Q21	489
Water Temperature Sender - Dual Station		49734	127, 501
Oil Pressure Gauge - Flagship	Black Face	79-895289A01	469
	White Face	79-895289A21	474
	White Face w/Chrome Bezel	79-895289A41	478
Oil Pressure Gauge - Admiral	Black Face	79-895289Q01	482
	Black Face w/Chrome Bezel	79-895289Q61	486
	White Face	79-895289Q21	490
Oil Pressure Sender - Dual Station		37293T	127, 636
Dual Engine Synchronizer - Flagship	Black Face	79-895294A01	469
	White Face	79-895294A21	474
	White Face w/Chrome Bezel	79-895294A41	478
Dual Engine Synchronizer - Admiral	Black Face	79-895294Q01	483
	Black Face w/Chrome Bezel	79-895294Q61	487
	White Face	79-895294Q21	491
Service Monitor		79-8M0050399	507
(Verify engine for suitability of product)	Instrumentation - SmartCraft Gauges		
SC1000 System Monitor - Front Mount	Rectangular	79-879896K21	435
SC1000 System Monitor - Rear Mount	Rectangular	79-879896K19	435

QUICK REFERENCE GUIDE-MERCRUISER

Description		Part Number	Page
SC1000 System Monitor - Front Mount	Round - Black	79-892219K19	435
	Round - White	79-892219K20	435
MercMonitor -NMEA 2000	Gateway Level 1 ECO Screen	79-8M0079864	434
	Gateway Level 2 SmartTow RPM, ECO Screen	79-8M0079865	434
	Gateway Level 3 SmartTow Pro, ECO Screen	79-8M0079866	434
	Gateway Level 3 SmartTow Pro w/GPS puck, ECO Screen	79-8M0079867	434
	ECO Scrren only	79-8M0062377	434
SC1000 Black - Glass Lens	Bezels must be ordered separately		
	Glass Lens 7,000 Tach	79-8M0079894	411
	Glass Lens, Single Engine Kit	79-8M0079889	412
	Glass Lens, Dual Engine Kit	79-8M0079887	412
SC1000 White - Glass Lens	Bezels must be ordered separately		
	Glass Lens 7,000 Tach	79-8M0079892	410
	Glass Lens, Single Engine Kit	79-8M0079880	410
	Glass Lens, Dual Engine Kit	79-8M0079881	411
SC1000 Gray - Glass Lens	Bezels must be ordered separately		
	Glass Lens 7,000 Tach	79-8M0079897	413
	Glass Lens, Single Engine Kit	79-8M0079900	413
	Glass Lens, Dual Engine Kit	79-8M0079901	414
VesselView 4		8M0074096	406
VesselView 7		8M0074095	406
	Electrical		
Instrument Harness - 10 pin	3 ft.	84-812475A 3	603
	20 ft.	84-812475A20	603
	25 ft.	84-812475A25	603
Instrument Harness - Non DTS 14 pin	2 ft.	84-896537T02	602
	8 ft.	84-896537T08	602
	11 ft.	84-896537T11	602
	15 ft.	84-896537T15	602
	20 ft.	84-896537T20	602
	25 ft.	84-896537T24	603
	30 ft.	84-896537T29	603
	40 ft.	84-896537T40	603
Anolog Guage Harness - Non DTS 14 pin	5 ft. (use with 84-896537T__)	84-892990T01	603
	10 ft. (use with 84-896537T__)	84-892990T10	603
	15 ft. (use with 84-896537T__)	84-892990T15	603
Extension Harness - 10 pin	10 ft.	84-812441A10	605
	15 ft.	84-812441A15	605
	20 ft.	84-812441A20	605
	30 ft.	84-812835A30	605
	45 ft.	84-812835A45	605
Extension Harness - 14 pin	6 ft.	84-892451T06	605
	10 ft.	84-892451T10	605
	15 ft.	84-892451T15	605
	20 ft.	84-892451T20	605

Description		Part Number	Page
	25 ft.	84-892451T25	605
	30 ft.	84-892451T30	605
	40 ft.	84-892451T40	605
Adaptor Harness	Non DTS 10 pin engine to 14 pin helm	84-892444T02	611
	Non DTS 14 pin engine to 10 pin helm	84-866337T01	611
Y Harness - Two Station 10 pin		84- 91942A 4	636
Ignition Switch		54212A 7	613
Ignition Switch w/harness - Non DTS 14 Pin	2 ft.	84-896537K02	617
	8 ft.	84-896537K08	617
	11 ft.	84-896537K11	617
	15 ft.	84-896537K15	617
	20 ft.	84-896537K20	618
	25 ft.	84-896537K24	618
	30 ft.	84-896537K29	618
	40 ft.	84-896537K40	618
Lanyard Stop Switch - Mechanical single engine - Bezel mount		87- 19674A06	627
Lanyard Stop Switch - Mechanical single engine - Flush mount		87- 19674A05	626
Lanyard Stop Switch - DTS single engine - Bezel mount		87- 19674A08	627
Lanyard Stop Switch - DTS single engine - Flush mount		87- 19674A07	627
Lanyard Stop Switch - Mechanical dual engine - Bezel or Flush mount		87-814324A 2	627
Lanyard Stop Switch - DTS dual engine - Bezel mount		87- 19674A13	627
Lanyard Stop Switch - DTS dual engine - Flush mount		87- 19674A12	627
Galvanic Isolator & Monitor		888557Q01	186
	Miscellaneous Accessories		
Serpentine Belt Kit - engine w/o p/s pump	See application chart - Engine Accessories section		
Hot Water Heater Fitting Kits	See application chart - Engine Accessories section		
Exhaust Riser Kits - 1.7 in, 3 in, 4.7 in & 6 in.	See application chart - Engine Accessories section		
Thru Transom Exhaust Outlets	- 3 in.	843434A 1	207
	- 4 in.	843426A 1	207
Thru Transom Exhaust Flappers	- 3 in.	34765A 2	133
	- 4 in.	12644A 1	133
Exhaust Block-off Plate	- Required when using thru transom exhaust	861776A 2	133
Exhaust Y Pipe Kit	- All V-8 engines, except 496 Mag	807130A 6	136
	- 496 Mag & 8.2L (also requires intermediate elbow kit	807130A21	155
Intermediate Elbow Kit (496 & 8.2L non-EC)	- 496 (0" to 2" riser)	44267A03	145
	- 496 (2" to 8" riser)	44267A02	144
Intermediate Elbow Kit (496 EC)	- use with 2" riser	44267A05	152
	- use with 4" riser	44267A06	152
	- use with 6" riser	44267A07	152

QUICK REFERENCE GUIDE-MERCRUISER

Description		Part Number	Page
	- use with 8" riser	44267A08	152
Intermediate Elbow Kit (8.2 EC) w/ 3 catalyst exh manifolds	- use with 2" riser	879288A13	154
	- use with 4" riser	879288A14	155
	- use with 6" riser	879288A15	155
	- use with 8" riser	879288A16	155
Intermediate Elbow Kit (8.2 EC) w/ single catalyst exh manifolds	- use with 2" riser	8M0095832	153
	- use with 4" riser	8M0095833	153
	- use with 6" riser	8M0095834	153
Exhaust "S" Pipe	- MCM	18563A 1	135
	-Tow Sports	807611T	135
Exhaust Reducer Kit	- reduces from 4 in. exhaust to 3 in. exhaust	44349A 1	135
Silent Choice Exhaust Valve	- all V-8 engines, except 496 Mag	N.L.A.	
Silent Choice Exhaust Pneumatic Air Pump		16645A 4	136
Closed Cooling Kits	See application chart - Engine Accessories section		
Jackshaft Extension Kits	MCM V-6 & V8 (except 4.5L & 6.2L Mercury)	98634A20	170
	MCM 4.5L & 6.2L (Mercury)	8M0089506	171
Remote Oil Filter Kits	MCM 3.0L Carb	N/A	
	MCM 4.3L Carb	864990A 2	173
	MCM 5.0L & 5.7L Carb	864990A 1	174
Crankcase Oil Pump - Q/S		802889Q 1	338
Crankcase Oil Pump - MPP		802889A 1	338
In-line Fuel Filter Kit (boost pump)		35-864572A 1	178
Water Separating Fuel Filter Kit - Q/S		35-802893Q 4	179
Water Separating Fuel Filter Kit - MPP		35-802893A 4	179
Gear Lube Reservoir Kit	Quart bottle for added capacity	865585A02	126
Gear Lube Reservoir Relocation Kit		806054A 1	127
Tilt Up Limit Spacer Kit		15768A 3	125
Trailering Clips - Q/S		817019Q 2	126
Trailering Clips - MPP		817019T 2	126
Seawater Strainer (fitting sold separately below)		35-860603	184
Seawater Stainer Fitting	1-1/2 " O.D. barb	22-816339	184
Seawater Hose Drain Kit		861505A 1	168
Flushing Attachment - allows running engine - Q/S		44357Q 2	170
Flushing Attachment - aloows running engine - MPP		44357T 2	170

Description		Part Number	Page
Dual Water Pickup Flush Seal Kit - Q/S		881150Q 1	170
Dual Water Pickup Flush Seal Kit - MPP		881150K 1	170
Engine Flush Kit	MCM V-6 & V-8 (305, 350, 377, 454, 502) non EC engines w/ Bravo drive	898235A01	169
	MCM 4.3L MPI EC engine w/ Bravo drive	8M0089505	169
	MCM 4.5L & 6.2L (Mercury) engines w/ Bravo drive	8M0099735	169
	MCM V-8 (305, 350, 377) EC engines w/ Bravo drive	879288A40	169
	MCM/MIE 8.1L & 8.2L non-EC engines	898235A02	169
	MCM/MIE 8.1L & 8.2L EC	8M0057577	169
	Steering		
Power Steering Pump and Cooler Kit	3.0L	861481A 2	710
Power Steering Cylinder		8M0063382	709
Dual Engine Tie Bar - stbd cable entry	16 in. (40 cm) to 30 in. (76 mm)	92020A 1	711
	30 in. (76 cm) to 46 in. (117 cm)	92020A 2	711
	46 in. (117 cm) to 62 in. (157 cm)	92020A 3	711
Dual Engine Tie Bar - port cable entry	29 in. (74 cm) to 37-1/2 in. (95 cm)	96708A 4	711

Notes:

TABLE OF CONTENTS

SmartCraft Instruments 401

Analog Gauge Interface Kits 453
MercMonitor featuring ECO Screen 431
MercMonitor featuring Mercury Gateway 430
MercMonitor with ECO Screen and Gateway (85mm) 434
Mercury Gateway 436
NMEA 2000 Gateway 432
NMEA 2000 Gateway Software 433
SC1000 Glass Gauges 402
SC1000 - SC100 Family Glass Lens Black Face Gauges 404
SC1000 - SC100 Family Glass Lens Gray Face Gauges 405
SC1000 - SC100 Family Glass Lens White Face Gauges 403
SC1000 Smart Tow Tach/Speed (85mm) Plastic Lens Black Face/Chrome Bezel 448
SC1000 Smart Tow Tach/Speed (85mm) Plastic Lens Gray Face/Black Bezel Gauges 436
SC1000 Smart Tow Tach/Speed (85mm) Plastic Lens White Face/Chrome Bezel 441
SC1000 System Monitor (52mm) 435
SC1000 System Monitor (85mm) 435
SC1000 System Monitor Bezels 435
SC 1000 System Tach/Speed (85mm) Glass Lens Black Face Gauges 411
SC 1000 System Tach/Speed (85mm) Glass Lens Gray Face Gauges 412
SC 1000 System Tach/Speed (85mm) Glass Lens White Face Gauges 409
SC1000 System Tach/Speed (85 mm) Plastic Lens Black Face/Chrome Bezel Gauges . . . 447
SC1000 System Tach/Speed (85 mm) Plastic Lens Gray Face/Black Bezel Gauges 436
SC1000 System Tach/Speed 85 MM Bezels 414
SC1000 System Tach/Speed 85 MM Bezels 450
SC 100 Glass Lens Black 110 mm 426
SC 100 Glass Lens Black 52 mm 417
SC 100 Glass Lens Black 85 mm 423
SC 100 Glass Lens Gray 110 mm 428
SC 100 Glass Lens Gray 52 mm 420
SC 100 Glass Lens Gray 85 mm 424
SC 100 Glass Lens White 110 mm 425
SC 100 Glass Lens White 52mm 414
SC 100 Glass Lens White 85 mm 423
SC 100 System Link (110mm) Plastic Lens Black Face/Chrome Bezel Gauges 450
SC 100 System Link (110 mm) Plastic Lens Gray Face/Black Bezel Gauges 440
SC 100 System Link (110 mm) Plastic Lens White Face/White Bezel Gauges 446
SC 100 System Link (52mm) Plastic Lens Black Face/Chrome Bezel Gauges 448
SC 100 System Link (52mm) Plastic Lens Gray Face/Black Bezel Gauges 437
SC 100 System Link (52mm) Plastic Lens White Face/Chrome Bezel Gauges 442
SC 100 System Link (52mm) Plastic Lens White Face/White Bezel Gauges 443
SC 100 System Link (85mm) Plastic Lens Black Face/Chrome Bezel Gauges 449
SC 100 System Link (85mm) Plastic Lens Gray Face/Black Bezel Gauges 439
SC 100 System Link (85mm) Plastic Lens White Face/Chrome Bezel Gauges 443
SC 100 System Link (85mm) Plastic Lens White Face/White Bezel Gauges 445
SC 100 System Link- 110MM -Bezel/Mounting Hardware 429
SC 100 System Link- 110MM -Bezel/Mounting Hardware 451
SC 100 System Link Gauge 52 MM Bezels 422
SC 100 System Link Gauge 52 MM Bezels 451
SC 100 System Link Gauge 85 MM Bezels 425
SC 100 System Link Gauge 85 MM Bezels 451
SmartCraft Engine Application Chart 401
SmartCraft Rigging and Conversion Kits 453
SmartCraft System Gauge and Monitor Retaining Nuts 452
VesselView 406
VesselView Family 406

Analog Instruments 456

Admiral Plus Black Face Family 479
Admiral Plus Black with Chrome Bezel 483
Admiral Plus White Face Family 487
Analog Gauge Interface - Digital Engines 463
Depth Sounders 495
Flagship Plus Black Face Family 465
Flagship Plus White Face Family 470
Flagship Plus White Face with Chrome Bezels . . . 475
Instrument Hole Cover Kit 507
Instrument Sets - Admiral Plus Black Face/ Chrome 460
Instrument Sets - Admiral Plus Black Face Family 459
Instrument Sets - Admiral Plus White Face Family 461
Instrument Sets - Flagship Plus Black Face Family 456
Instrument Sets - Flagship Plus White Face/ Chrome 458
Instrument Sets - Flagship Plus White Face Family 457
Instrument Sets - International II Family 462
International II Family Gauges 491
Mechanical Trim Position Indicator & Bezel Chart 514
Mechanical Trim Position Indicator Actuator Kits . . 513
Mechanical Trim Position Indicators - 1 Pointer . . . 511
Mechanical Trim Position Indicators - 2 Pointer . . . 511
Mechanical Trim Position Indicators - 3 Pointer . . . 511
Mechanical Trim Position Indicators - 4 Pointer . . 512
Mechanical Trim Position Indicators - 5 Pointer . . 513
Monitor Panels for Diesels 464
Oil Pressure Senders 502
Power Trim Sender Chart 504
Power Trim Senders 502
QSS Replacement Gauges 494
Service Monitors 507
Speedometer Pickups 499
Tachometer Selection and Settings Charts . . . 464
VDO Family Gauges 499
Warning Light Kits - Safety Systems & Harnesses 507
Water Pressure Pick-Up Kits 500
Water Temperature Senders 500

Digital Throttle and Shift Remote Controls . . 515

Controls-Console Dual 516
Controls-Console-Single 516
Controls-Panel 515
Controls-Yacht 517
DTS Track Pads 517
Foot Throttle Control 515
Triple/ Quad- Controls 516
Zero Effort Controls 517

Mechanical Remote Controls 521

64-853951A_ Series Shift Cables 556
820671A_ Series Shift Cables 556
858342A_ Series Shift Cables 557
Bulkhead Fittings and Bellows Kits 558
Commander Series Console Mount - Dual Engine 529
Commander Series Console Mount - Single Engine 529
F5H208/__ Throttle and Shift Cables 556
Force 1992 and Prior Cable Connectors 556
GEN I / SAE Premium Throttle / Shift Cable 544
GEN II/ SAE Premium Throttle / Shift Cable 547
Jet Drive Remote Controls 530
MCC 4500 Console Mount - Dual Engine (Gen II) 524
MCC 4500 Console Mount - Single Engine (Gen II) 523
Morse 33C Series Cable Adapters 555
MPC 4000 Panel Mount Remote Controls (Gen II) 521
MSC 4000 Side Mount - Accessories 528
MSC 4000 Side Mount - Elect, Non-Power Trim . . 527
MSC 4000 Side Mount - Electric, Power Trim 525
MSC 4000 Side Mount - Manual Start, W/Switch . 528
MSC 4000 Side Mount - Manual Start W/ No Switch 528

Outboard Rigging Hose Kit 541
Premium T/S Cables- Gen I / Merc- 897977 series 545
Premium T/S Cables- Gen II - 897978 series 549
Premium T/S Cables- Sae/Sae - 897979 series . . 552
Remote Control Attaching Kits 540
Remote Control Chart 521
Remote Control Conversion Kits 538
Rigging Hose Chart 542
Throttle/Shift GEN II- Xtreme Cables 554
Throttle/Shift GEN I - Xtreme Cables 553
Throttle and Shift Cables Chart 543
Two Station Throttle & Shift Cables Attaching Kit 557
Zero Effort Remote Controls 530

Joystick Rigging 559

POWER STEERING HOSE KITS-JOYSTICK PILOTING 560

DTS Rigging 561

DTS Command Module and Harness Kits 562
DTS Components 566
DTS Helm Board Kits (Helm Boards Only) 565
DTS Rigging Kits 561
SmartCraft and DTS Application Information 561

Diesel Rigging 567

2.0L Engine Rigging Kits 567
Adapters and Harnesses 578
CCM Service Modules 577
Diesel TDI Rigging 568
Helm Panel DTS - Main Station 575
Helm Panel DTS - Second Station 576
Helm Panel Non-DTS Main Station 577
Miscellaneous Accessories 582
Panels DTS 567
Panels DTS 572
Panels Non DTS 567
Panels Non DTS 573
Vessel Panels DTS 571
VIP Modules -Interface Panels 574

SmartCraft Rigging 583

10 Pin (Blue) Data Harnesses 588
10 Pin (Yellow) Data Harnesses 587
Active Trim Kits 583
Adapter Harnesses - 10 Pin 589
Adapter Harnesses - 2 Pin 590
Add-On Sensor Harnesses 590
Add-On Sensor Harnesses - MCM 599
Add-On Sensor Rigging Kits - MCM 598
Block Water Pressure Sender 591
Fuel Senders 591
GPS Kits 595
Junction Boxes/Junction Box Accessories 584
Oil Pressure Sensor 591
Pitot Kits 593
SC 100 Link Harnesses 586
SmartCraft Gauge Harnesses 585
SmartCraft K-Planes - Harnesses 600
SmartCraft Rigging Kits 596
Steering Angle Sensors 599
Transducers In-Hull 593
Transducers Thru Hull 592
Transom Mount Transducer Brackets 592
Transom Mount Transducers 592
Trim Sensors 591

Electrical 601

10 Pin (Blue) Data Harnesses 608
10 Pin (Yellow) Data Harnesses 608
14 Pin Data Harnesses 606
Accessory Harnesses 612
Adapter Harnesses 610
Adapter Harnesses - 14 Pin 610
Adapter Harnesses - 2 Pin 610
Alpha/Numeric Key Chart 623
Battery Bar - Multiple Connector 645
Battery Cables 645
Battery Isolators 646

Cable Ties 653
Dual Station Senders 636
Electrical Hardware 647
Force Unique Ignition Key Chart 626
Force Unique Ignition Keys 626
Fuses and Circuit Breakers 650
Ignition Key Cover 626
Ignition Keys - 3 Position - Base Number 897716 Key Switch 624
Ignition Keys - 4 Position - Base Number 893353 Key Switch 623
Ignition Keys - Numeric 623
Ignition Key Switches 613
Ignition Key Switch with Harnesses 617
Instrument Extension Harnesses (Diesel) 605
Instrument Extension Harnesses (Gas Engines) . . 605
Instrument Harnesses 602
Junction Boxes/Junction Box Accessories 631
Key Switches 621
Lanyard Stop Switches 626
Lanyard Switches 629
Mariner Unique Ignition Key Chart 625
Mariner Unique Ignition Keys 625
Numeric Key Chart 625
Optional Remote Control Harnesses 636
Outboard Power Trim Switch Kits 641
Power Trim Adaptor Harnesses 644
Power Trim Control Panels 637
Power Trim Extension Harnesses 643
Power Trim Extension Hose/Harness Kit 644
Power Trim Power Supply Cable 644
Quicksilver Funnel Entry Vinyl Terminals 649
Quicksilver Heat Shrinkable Connectors and Tubing 650
Remote Control/Ignition Choke Extension Harnesses 635
Remote Control Adapter Harnesses 635
SC 100 Link Harnesses 602
Security Systems 632
Shadow Resistor Packs 630
SmartCraft Gauge Harnesses 601
Start / Stop Switches 619
Tachometer Harnesses 635
Tools 653
Transom Mounted Ignition Keyswitch 619
Transom Mounted Power Tilt Panel 641
Trim Limit kits 640
Trim Switches 637
Troll Control 643
Two Station Start/Stop Panels 637
Two Station Y-Harnesses 636

Steering 654

Cable Seal Kit 708
Dual Cable - Single Engine Attaching Kit 707
Dual Engine Tie Bar Kits 707
Front Pivot Mount Cylinder Chart 699
Front Pivot Mount Cylinder Chart 701
Hydraulic Steering - Basic and Heavy Duty Systems 674
Hydraulic Steering - Common to Power Steering Systems 681
Jet Drive 135 & 270 Deg. Steering System 711
Jet Drive 540 Deg. Steering System 712
Jet Drive Steering Cable Rod End 712
MerCruiser Dual Engine Tie Bar Kits 711
MerCruiser Power Steering Kits 709
Outboard Cable and Pulley Attaching Kits 708
Power Steering Components 659
Power Steering - Dual 658
POWER STEERING HOSE KITS-JOYSTICK PILOTING 669
Power Steering - Quad 659
Power Steering - Single 657
Power Steering - Triple 658
RideGuide Attaching Kits 704
SeaStar Tie Bar Kit Chart 703
Steering Brackets 706
Steering Cable Bulkhead Fittings/Bellows Kits . . . 713
Steering Link Rod Chart 706
Steering Wheels 654
Teleflex Big-T Bezel Kit/Misc 697
Teleflex Mechanical Steering Helms 696

Teleflex NFB Rack System 689
Teleflex NFB Rotary Steering 691
Teleflex NFB SeaStar Hydraulic Outboard Steering 697
Teleflex NFB SeaStar Pro Hydraulic O/B Steering 699
Teleflex NFB SeaStar Replacement Parts 702
Teleflex NFB SeaStar Tie Bar Kits 703
Teleflex Non-NFB Safe-T QC Rotary Steering Systems 689
Teleflex Rotary Steering Cables 696
Tie Bar Kits 670
Tiller Handle Steering- Big Tiller 655
Transom Mounted Steering Kits 708
Uflex Mechanical Steering Cables 688
Uflex Misc Components 695
Uflex Outboard Hydraulic Steering Systems 701
Uflex Rotary Steering Cables 693
Uflex Standard Rack Steering System 685
Uflex Standard Rack Steering System / Tilt 685
Uflex Standard Rotary Steering Systems 689
Uflex Standard Rotary Steering Systems/ Dual Cable 690
Uflex Standard Rotary Steering Systems/Tilt 690
Uflex Steering Components-Helms, Bezels,Tilt Mech. 693
Uflex Steering Cylinders, Helms and Hoses-Misc 701
Uflex ZeroTorque Feedback Rack Steering System 686
Uflex ZeroTorque Feedback Rack System/Tilt . . . 687
Uflex ZeroTorque Feedback Rotary Steering System 692
Uflex ZeroTorque Feedback Rotary Systems / Tilt 692

Throttle and Shift Cables 714

858342A_ Series Shift Cables 725
GEN I / SAE Premium Throttle / Shift Cable 715
GEN II/ SAE Premium Throttle / Shift Cable 718
Morse 33C Series Cable Adapters 724
Premium T/S Cables- Gen I - 897977 series 716
Premium T/S Cables- Gen II - 897978 720
Premium T/S - SAE- 897979 series 723
Throttle and Shift Cables Chart 714
Two Station Throttle & Shift Attaching Kit 724

K Planes (Trim Tabs) 726

Actuator Kits 729
Competition K-Planes 728
Hoses for K-Planes 729
K-Planes Hose Kits 729
Mechanical Trim Position Indicator Chart 727
Mechanical Trim Position Indicators 1 Pointer . . . 726
Mechanical Trim Position Indicators 2 Pointer . . . 726
Mechanical Trim Position Indicators 3 Pointer . . . 726
Mechanical Trim Position Indicators 4 Pointer . . . 727
Mechanical Trim Position Indicators 5 Pointer . . . 727
Sport K-Planes 728

Installation Specifications and Tools 731

Commander/3000/4000 Conso Mount Controls Schematic 737
Commander 2000 Side Mount Controls 761
Commander 3000/4000 Panel Mount Controls Schematic 736
Commander 3000-Console Mount Control-Dual Engine 757
Commander 3000-Console Mount Control-Single Engine 756
Commander 3000 - Panel Mount Controls 755
Commander Console Mount - Dual Engines 759
Commander Console Mount - Single Engine 758
Commander Console Mount - Two Lever 760
DTS - ERC Console Mount Controls - Dual Engine 768
DTS - ERC Console Mount Controls - Single Engine 766
DTS - ERC Dual Console Mount Cutout Template 765
DTS - ERC Panel Mount Controls 764
DTS - ERC Panel Mount Cutout Template 763
DTS - ERC Slim Binnacle - Single Engine 767
Dual Engine Battery and Isolator Call Out 779

Dual Engine Battery and Isolator Diagram(Verado) 778
Dual Remote Oil Tank Schematic 791
Installation Aids 731
MCC 4500 Console Mount Controls - Dual Engine 753
MCC 4500 Console Mount Controls - Single Engine 751
MCC 4500 GEN II Console Mount Controls-Dual Engine 754
MCC 4500 GEN II Console Mount Controls-Single Eng. 752
Measuring Console Control Throttle/Shift Cables 785
Measuring for Exhaust Risers 790
Measuring MerCruiser RideGuide Cables 789
Measuring MerCruiser Throttle/Shift Cables 784
Measuring Outboard RideGuide Cables 789
Measuring Outboard Throttle/Shift Cables 784
MerCruiser Two-Station (Electric Shift) Schematic 744
MPC 4000/4000 GEN II-Panel Mount Cutout Template 750
MPC 4000 GEN II Panel Mount-Lock Bar Design 748
MPC 4000 GEN II Panel Mount-Lock Bar Finger Release Design 749
MPC 4000 Panel Mount Controls (Trim/Non-Trim) 747
MSC 4000 Side Mount Controls 762
MSC 4000 Side Mount Control Schematic 738
MSC 4000 Side Mount Control Schematic 740
MSC 4500 Side Mount Control Schematic 741
MY 2005 & Newer F8/9.9 Manual Side Mount Schematic 739
MY 2005 & Up F8/9.9 Electric Side Mount Schematic 742
MY 2005 & Up F8/9.9 Electric W/Merc Style Plug 743
Outboard Dual Station Schematic - Sheet One . . . 745
Outboard Dual Station Schematic - Sheet Two . . . 746
Outboard Transom Mounting Specifications . . 734
Power Steering Dual Station 771
Power Steering Dual Station 773
Power Steering Single Station 772
Power Steering-Single Station 769
Power Steering-Single Station 770
Power Steering Tilt Helm Template (Old Pattern) 774
Power Steering Tilt Helm Template (Vertical/Horizontal Decking) 775
Quad Engine Battery and Isolator Call Out 783
Quad Engine Battery and Isolator Diagram(Verado) 782
Rotary RideGuide Single Cable Steering Clearances 786
Rotary RideGuide Two-Cable Steering Clearances 787
Single Engine Battery and Isolator Call Out 777
Single Engine Battery and Isolator Diagram(Verado) 776
Straight Rack RideGuide Steering Clearances . . . 788
Tilting Straight Rack RideGuide Steering Clearance 788
Triple Engine Battery and Isolator Call Out 781
Triple Engine Battery and Isolator Diagram(Verado) 780

SMARTCRAFT INSTRUMENTS

SMARTCRAFT ENGINE APPLICATION CHART

SMARTCRAFT® ENGINE APPLICATIONS

	OUTBOARDS									STERNDRIVES				RACING						
ENGINE OUTPUTS	FOURSTROKE 40-60 HP EFI	FOURSTROKE 75-115 HP EFI	FOURSTROKE 150 HP	VERADO® 150-300 HP	OPTIMAX® 75-125 HP	OPTIMAX® 150-250 HP	OPTIMAX® PRO XS®	OPTIMAX® 300 XS	VERADO® 350 SCI	3.0 MPI	4.3 MPI	5.0L / 350 MAG / 5.7L / 377 MAG / 6.2L	8.2 MAG / HO ECT	520	525 EFI	550	565	600 SCI / 662 SCI	700 SCI	1100 / 1350 / 1650
Air Temp	O	O	O	O	O	O	O	O	O	O	O	O	O	O	O	O	O	O	O	O
Battery Voltage	S	S	S	S	S	S	S	S	S	S	S	S	S	S	S	S	S	S	S	S
Boat Speed *(GPS)*	O	O	O	O	O	O	O	O	O	O	O	O	O	O	O	O	O	O	O	O
Boat Speed *(pitot)*		O	O	S	O	S	O	S				S	S							
Boost				S					S				S					S	S	S
Descriptive Fault Text	S	S	S	S	S	S	S	S	S	S	S	S	S	S	S	S	S	S	S	S
Digital Throttle & Shift				S					S			O	O	S		S	S			S
Engine Guardian	S	S	S	S	S	S	S	S	S	S	S	S	S	S	S	S	S	S	S	S
Engine Hour Meter	S	S	S	S	S	S	S	S	S	S	S	S	S	S	S	S	S	S	S	S
Engine Syncronizer												O	O	S	S	S	S	S	S	S
Engine Temperature	S	S	S	S	S	S	S		S	S	S	S	S	S	S	S	S	S	S	S
Engine Trim		O	S	S	O	S	O	S	S	S	S	S	S	S	S	S	S	S	S	S
Exhaust Manifold Temp													S							
Fuel Flow	S	S	S	S	S	S	S	S	S	S	S	S	S	S	S	S	S	S	S	S
Fuel Level/Range		O	O	O	O	O	O	O	O	O	O	O	O	S	S	S	S	S	S	S
Fuel Pressure															S		S	S	S	S
Fuel Used	S	S	S	S	S	S	S	S	S	S	S	S	S	S	S	S	S	S	S	S
Maintenance monitor			S										S							
Oil Level *(remote tank)*					O	O	O	O												
Oil Pressure		S	S	S					S	S	S	S	S	S	S	S	S	S	S	S
Oil Temperature				S					S						S		S	S	S	S
RPM	S	S	S	S	S	S	S	S	S	S	S	S	S	S	S	S	S	S	S	S
RPM Smart Tow®*				S					S			O	S	S		S	S			S
Steering Angle										O	O	O	O	O		O	O		S	S
Tab Position														S	S	S	S	S	S	S
Transmission Guardian												S	S				S			S
Troll Control	S	S	S	S	S	S	S	S	S	S	S	S	S	S	S	S	S	S	S	S
Water Depth	O	O	O	O	O	O	O	O	O	O	O	O	O							
Water in Fuel			O	S	S	S	S	S	S											
Water Pressure		S	S	S	S	S	S	S	S		S	S	S	S	S	S	S	S	S	S
Water Tank Level		O	O	O	O	O	O	O	O	O	O	O	O	O	O	O	O	O	O	O
Water Temp	O	O	O	O	O	O	O	O	O	O	O	O	O	O		O				

S Standard features with engine

O Available with optional sensors/harnesses

* GPS SmartTow Pro requires additional GPS puck

SC1000 GLASS GAUGES

SC1000 Glass Gauges®



BOLD STYLING
RUGGED LENS
Same Great Features

The marine industry's most advanced gauges, offering essential vessel information in plain, descriptive text.

Accurate digital information on a clean, easy-to-read dial. Mercury SmartCraft® gauges deliver instant, reliable information at a glance, providing total awareness and comfort while on the water.

Product line includes a full complement of SC100 link gauges.

Available Controls/Features

- Troll Control ™
- Fuel to Waypoint
- Engine Synchronizer
- Trim Synchronizer
- Steering Angle
- GPS Speed
- GPS Course & Speed
- Speed Sensor Fault
- Low-Fuel Warning
- Low-Oil-Level Warning (OB)
- Water in Fuel Fault§
- Auto Speed Sensor Transition
- Air/Sea Temp
- Digital Speed
- Oil Level
- Fuel Level
- Time of Day
- Boat Speed
- Low Depth Warning
- Horn Fault
- Ignition Fault
- Injector Fault
- Oil System Fault
- Reserve Oil (OB)
- Dot Matrix LCD Display
- RPM
- Engine Alarms
- Oil Temp
- Oil Pressure
- Battery Voltage
- Depth
- Water Pressure
- Coolant Temp
- Coolant Pressure
- Engine Hours
- Trim Pop-Up
- Engine Trim
- Fuel Used
- Fuel Flow
- Fuel Range
- System Link Gauge Connection
- SmartTow**

§Not available on MerCruiser
** DTS Required

Benefits

- **New! - SmartTow now standard on ALL SC1000 speedometers and tachometers**
- **New Glass Lenses** provide enhanced scratch resistance and worry-free care
- **Optimized anti-fog coating**
- **Cutting-edge** Style and Design
- **Easy to install**
- **MIL Light Compatible**
- **Supports 150HP FourStroke** maintenance feature

Applications

Compatible with all SmartCraft engines, including the New 150HP FourStroke!

SC1000 Glass Gauge Kits*	P/N
White 7000 RPM Tach Kit	8M0079892
White 7000 RPM Tach/80 MPH Speed Kit	8M0079880
Black 7000 RPM Tach Kit	8M0079894
Black 7000 RPM Tach/80 MPH Speed Kit	8M0079889
Gray 7000 RPM Tach Kit	8M0079897
Gray 7000 RPM Tach/80 MPH Speed Kit	8M0079900

*Bezels sold separately

MERCURY Precision Rigging

© 2013 Mercury Marine. All rights reserved.
Printed in U.S.A. P/N 90-8M0082905 0413

SC1000 - SC100 FAMILY GLASS LENS WHITE FACE GAUGES



SC1000 - SC100 FAMILY GLASS LENS BLACK FACE GAUGES



SC1000 - SC100 FAMILY GLASS LENS GRAY FACE GAUGES



VESSELVIEW FAMILY



VESSELVIEW

VesselView 4 and 7 are the next generation full color displays with an enhanced full sunlight viewable vessel information center encompassing data from the vessel, navigation and engines. There are numerous NMEA2K input options in addition to the fully integrated Mercury Marine SmartCraft digital information and control features.

VESSELVIEW 7 KIT



8M0074095

VesselView 7 is a new direct sunlight viewable color touchscreen display that displays vessel, navigational and engine data for up to 4 engines simultaneously. Can be used with SC100 links, SC1000 monitors and SC1000 tach/speed gauges. Kit includes VesselView 7 and harnessing. Standard features include ECO Screen, Troll Control, Cruise Control, SmartTow (some features require DTS).

Works with Gen I (2007) Engines and newer. Includes outboard, diesel and MerCruiser product.

VESSELVIEW 4 KIT



8M0074096

VesselView 4 is an all new direct sunlight viewable color display that displays vessel, navigational and engine data for up to 2 engines simultaneously. Can be used with SC100 links, SC1000 monitors and SC1000 tach/speed gauges. Kit includes VesselView 4 and harnessing. Standard features include ECO Screen, Troll Control, Cruise Control and SmartTow (some features require DTS).

Works with Gen I (2007) Engines and newer. Includes outboard, diesel and Mercruiser product.

VESSELVIEW 7 SUN COVER



8M6001759

Protects VesselView 7 when unit is not being used. With Mercury Logo
Works with VesselView 7

VESSELVIEW 4 SUN COVER



8M6001764

Protects VesselView 4 when unit is not being used. With Mercury Logo
Works with VesselView 4

VESSELVIEW 7 SUN COVER (CUMMINS)



8M6003440

VesselView 7 sun cover with the Cummins logo
Can be used on any VesselView 7 display

VESSELVIEW 4 SUN COVER (CUMMINS)



8M6003441

VesselView 4 sun cover with the Cummins logo
Can be used on any VesselView 4 display

VESSELVIEW 7 CHROME ACCENT - TOP AND BOTTOM



8M6001763

Replacement VesselView 7 top and bottom accent trim pieces - chrome
Works with VesselView 7

VESSELVIEW 4 CHROME ACCENT - TOP/BOTTOM



8M6001765

Replacement VesselView 4 top and bottom accent trim pieces - chrome.
Works with VesselView 4

VESSELVIEW PRIMARY HARNESS



84-8M0075065

Primary harness for use with VesselView 4 & 7.

Primary harness is used when there is only one VesselView at the helm or for the Primary VesselView at the helm when multiple VesselViews are used at a given helm location. Use with appropriate adapter harness (straight or 90 degree) for the VesselView 4 or 7.

VESSELVIEW 4 HARNESS



84-8M0075079

Straight adapter harness for VesselView 4.

Straight adapter harness to be used with VesselView Primary Harness (8M0075065) or Slave Power Harness (8M0077649) for connecting to VesselView 4.

VESSELVIEW 7 HARNESS



84-8M0075080

Straight adapter harness for VesselView 7.

Straight adapter harness to be used with VesselView Primary Harness (8M0075065) or Slave Power Harness (8M0077649) for connecting to VesselView 7.

VESSELVIEW 7 HARNESS



84-8M0075067

90 degree adapter harness for VesselView 7.

90 degree adapter harness to be used with VesselView Primary Harness (8M0075065) or Slave Power Harness (8M0077649) for connecting to VesselView 7.

VESSELVIEW 4 HARNESS



84-8M0075066

90 degree adapter harness for VesselView 4.

90 degree adapter harness to be used with VesselView Primary Harness (8M0075065) or Slave Power Harness (8M0077649) for connecting to VesselView 4.

VESSELVIEW POWER HARNESS



84-8M0077649

Slave power harness for use with VesselView 4 & 7.

Slave power harness is used when there are multiple VesselViews used at a given helm location beyond the Primary display. Use with appropriate adapter harness (straight or 90 degree) for the VesselView 4 or 7.

VESSELVIEW 7 DISPLAY



8M6001766

Display unit only with bezels, sun cover, weather caps, mounting hardware and gasket.

VV7 display unit only for use as a Slave display on multi-VV display installations. Requires the VV7 adapter harness (8M0075067 - 90 degree or 8M0075080 - straight), slave power harness (8M0077649) and NMEA2K connection to Primary VV display at that helm.

VESSELVIEW 4 DISPLAY



8M6001767

Display unit only with bezels, sun cover, weather caps, mounting hardware and gasket.

VV4 display unit only for use as a Slave display on multi-VV display installations. Requires the VV4 adapter harness (8M0075066 - 90 degree or 8M0075079 - straight), slave power harness (8M0077649) and NMEA2K connection to Primary VV display at that helm.

VESSELVIEW 4 ADAPTER PLATE

8M0079348

VesselView 4 adapter plate in brushed stainless steel.

Adapter plate to install a VesselView 4 into the cutout for the previous generation VesselView.

VESSELVIEW REPLACEMENT NMEA2K WEATHER CAP



8M6001762

Replacement weather cap for NMEA2K connector on back of VesselView.
Used on both VV4 and VV7.

WEATHER CAP-VIDEO CONNECTOR



8M6001761

Replacement weather cap for video connector on back of VesselView.
Used only on VV7.

WEATHER CAP-NETWORK CONNECTOR



8M6001760

Replacement weather cap for network connector on back of VesselView.
Used only on VV7.

VESSELVIEW 7 VIDEO INPUT CABLE



8M6003460

Add up to two video sources as inputs to your VesselView 7 display. Can be used for viewing numerous useful locations: the swim platform area, inside the engine compartment/bilge area, from the ski tower looking aft or down in the galley/cabin below

Only works with VesselView 7 and NTSC/PAL analog video signals

SC 1000 SYSTEM TACH/SPEED (85MM) GLASS LENS WHITE FACE GAUGES

Software version 7.0 for all SC1000 Tachometers and Speedometers supports the Mercury global dimming feature, maintenance reminder feature, an improved user interface and have SmartTow standard (various features are engine specific)

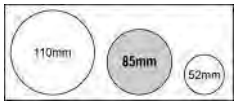

SPEEDOMETER



79-8M0079882

SC1000 80 MPH speed gauge, white face, glass lens. Fits 85mm dia. hole.

Application of this gauge will depend on the individual engine model and its available sensors. Ver 7.0 software supports Mercury global dimming function, 150 4-stroke Maintenance Feature, improved user interface and standard SmartTow functionality.

BEZEL SOLD SEPARATELY. Works with all SmartCraft capable engines.

79-8M0079883

SC1000 80 MPH speed gauge, white face, glass lens. Fits 85mm dia. hole.

Application of this gauge will depend on the individual engine model and its available sensors. Ver 7.0 software supports Mercury global dimming function, 150 4-stroke Maintenance Feature, improved user interface and standard SmartTow functionality.

BEZEL SOLD SEPARATELY. Works with all SmartCraft compatible engines. BULK KIT

Priced individually, sold @ multiples of 24

SPEEDOMETER



79-8M0079873

SC1000 50 MPH speed gauge, white face, glass lens. Fits 85mm dia. hole.

Application of this gauge will depend on the individual engine model and its available sensors. Ver 7.0 software supports Mercury global dimming function, 150 4-stroke Maintenance Feature, improved user interface and standard SmartTow functionality.

BEZEL SOLD SEPARATELY. Works with all SmartCraft compatible engines.

SPEEDOMETER (NO LOGO)



79-8M0079927

SC1000 50 MPH Speed gauge, no logo, white face, glass lens. Fits 85mm dia. hole. Application of this gauge will depend on the individual engine model and its available sensors. Ver 7.0 software supports Mercury global dimming function, 150 4-stroke Maintenance Feature, improved user interface and standard SmartTow functionality.

BEZEL SOLD SEPERATELY. Used on all SmartCraft capable engines

TACHOMETER



79-8M0079892

SC1000 7000 RPM Tach gauge, white face, glass lens. Fits 85mm dia. hole.

Application of this gauge will depend on the individual engine model and its available sensors. Ver 7.0 software supports Mercury global dimming function, 150 4-stroke Maintenance Feature, improved user interface and standard SmartTow functionality.

BEZEL SOLD SEPARATELY. Works with all SmartCraft compatible engines.

79-8M0079893

SC1000 7000 RPM Tach gauge, white face, glass lens. Fits 85mm dia. hole.

Application of this gauge will depend on the individual engine model and its available sensors. Ver 7.0 software supports Mercury global dimming function, 150 4-stroke Maintenance Feature, improved user interface and standard SmartTow functionality.

BEZEL SOLD SEPARATELY. Works with all SmartCraft compatible engines. BULK KIT

Priced individually, sold @ multiples of 24

TACHOMETER



79-8M0079874

SC1000 4000 RPM Tach gauge, white face, glass lens. Fits 85mm dia. hole.

Application of this gauge will depend on the individual engine model and its available sensors. Ver 7.0 software supports Mercury global dimming function, 150 4-stroke Maintenance Feature, improved user interface and standard SmartTow functionality.

BEZEL SOLD SEPARATELY. Works with all SmartCraft compatible engines.

TACHOMETER (NO LOGO)



79-8M0079925

SC1000 4000 RPM Tach gauge, no logo, white face, glass lens. Fits 85mm dia. hole.

Fits 2001 and newer Optimax Outboards, 2002 and newer V-6 EFI, 30-60 EFI 4-stroke, Verado, Diesel and all SmartCraft compatible Mercruiser and Mercury Racing product when these models have the 555 ECM. Application of this gauge will depend on the individual engine model and its available sensors. Software 7.0 supports Mercury global dimming function, 150 4-stroke Maintenance Feature, improved user interface and standard SmartTow functionality.

BEZEL SOLD SEPERATELY. Used on all SmartCraft capable engines

TACHOMETER (NO LOGO)



79-8M0079926

SC1000 5000 RPM Tach gauge, no logo, white face, glass lens. Fits 85mm dia. hole.

Application of this gauge will depend on the individual engine model and its available sensors. Software 7.0 supports Mercury global dimming function, 150 4-stroke Maintenance Feature, improved user interface and standard SmartTow functionality.

BEZEL SOLD SEPERATELY. Used on all SmartCraft capable engines

SC1000 SYSTEM TACH/SPEED SINGLE ENGINE HELM KIT



79-8M0079880

(1) 0-7000 RPM gauge and (1) 0-80 Speedometer. Contains speed and tach harnesses, air temp sensor and junction box for single engine application. White face with black numerals. Application of these gauges will depend on the individual engine model and its available sensors. Ver 7.0 software supports Mercury global dimming function, 150 4-stroke Maintenance Feature, improved user interface and standard SmartTow functionality.

BEZELS SOLD SEPARATELY. Work with all SmartCraft compatible engines.

SC1000 SYSTEM TACH/SPEED DUAL ENGINE HELM KIT



79-8M0079881

(2) 0-7000 RPM gauges and (1) 0-80 MPH Speedometer. Contains speed and tach harnesses, junction box and air temp sensor for dual application. White face with black numerals. Application of these gauges will depend on the individual engine model and its available sensors. Ver 7.0 software supports Mercury global dimming function, 150 4-stroke Maintenance Feature, improved user interface and standard SmartTow functionality.

BEZELS SOLD SEPARATELY. Work with all SmartCraft compatible engines. An additional junction box may be required depending on application.

SC 1000 SYSTEM TACH/SPEED (85MM) GLASS LENS BLACK FACE GAUGES

Software version 7.0 for all SC1000 Tachometers and Speedometers supports the Mercury global dimming feature, maintenance reminder feature, an improved user interface and have SmartTow standard (various features are engine specific)

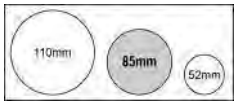

SPEEDOMETER



79-8M0079886

SC1000 80 MPH speed gauge, black face, glass lens. Fits 85mm dia. hole.

Application of this gauge will depend on the individual engine model and its available sensors. Ver 7.0 software supports Mercury global dimming function, 150 4-stroke Maintenance Feature, improved user interface and standard SmartTow functionality.

BEZEL SOLD SEPARATELY. Works with all SmartCraft compatible engines.

SPEEDOMETER



79-8M0079884

SC1000 50 MPH speed gauge, black face, glass lens. Fits 85mm dia. hole.

Application of this gauge will depend on the individual engine model and its available sensors. Ver 7.0 software supports Mercury global dimming function, 150 4-stroke Maintenance Feature, improved user interface and standard SmartTow functionality.

BEZEL SOLD SEPARATELY. Works with all SmartCraft compatible engines.

SPEEDOMETER (NO LOGO)



79-8M0079913

SC1000 50 MPH Speed gauge, no logo, black face, glass lens. Application of this gauge will depend on the individual engine model and its available sensors. Software 7.0 supports Mercury global dimming function, 150 4-stroke Maintenance Feature, improved user interface and standard SmartTow functionality.

BEZEL SOLD SEPERATELY. Used on all SmartCraft capable engines.

SC1000 SYSTEM TACHOMETER



79-8M0079894

SC1000 7000 RPM Tach gauge, black face, glass lens. Fits 85mm dia. hole. Application of this gauge will depend on the individual engine model and its available sensors. Ver 7.0 software supports Mercury global dimming function, 150 4-stroke Maintenance Feature, improved user interface and standard SmartTow functionality.

BEZEL SOLD SEPARATELY. Works with all SmartCraft compatible engines.

79-8M0079895

SC1000 7000 RPM tach gauge, black face, glass lens. Fits 85mm dia. hole. Application of this gauge will depend on the individual engine model and its available sensors. Ver 7.0 software supports Mercury global dimming function, 150 4-stroke Maintenance Feature, improved user interface and standard SmartTow functionality.

BEZEL SOLD SEPARATELY. Works with all SmartCraft compatible engines. BULK KIT

Priced individually, sold @ multiples of 24

TACHOMETER



79-8M0079885

SC1000 4000 RPM Tach gauge, black face, glass lens. Fits 85mm dia. hole. Application of this gauge will depend on the individual engine model and its available sensors. Ver 7.0 software supports Mercury global dimming function, 150 4-stroke Maintenance Feature, improved user interface and standard SmartTow functionality.

BEZEL SOLD SEPARATELY. Works with all SmartCraft compatible engines.

TACHOMETER (NO LOGO)



79-8M0079924

SC1000 4000 RPM Tach gauge, no logo, black face, glass lens. Fits 85mm dia. hole. Application of this gauge will depend on the individual engine model and its available sensors. Software 7.0 supports Mercury global dimming function, 150 4-stroke Maintenance Feature, improved user interface and standard SmartTow functionality.

BEZEL SOLD SEPERATELY. Used on all SmartCraft capable engines

TACHOMETER (NO LOGO)



79-8M0079911

SC1000 5000 RPM Tach gauge, no logo, black face, glass lens. Fits 85mm dia. hole. Application of this gauge will depend on the individual engine model and its available sensors. Software 7.0 supports Mercury global dimming function, 150 4-stroke Maintenance Feature, improved user interface and standard SmartTow functionality.

BEZEL SOLD SEPERATELY. Used on all SmartCraft capable engines

SC1000 SYSTEM TACH/SPEED SINGLE ENGINE HELM KIT



79-8M0079889

(1) 0-7000 RPM gauge and (1) 0-80 Speedometer. Contains speed and tach harnesses, air temp sensor and Junction box for single application. Black face with white numerals. Application of these gauges will depend on the individual engine model and its available sensors. Ver 7.0 software supports Mercury global dimming function, 150 4-stroke Maintenance Feature, improved user interface and standard SmartTow functionality.

BEZELS SOLD SEPARATELY. Work with all SmartCraft compatible engines.

SC1000 SYSTEM TACH/SPEED DUAL ENGINE HELM KIT



79-8M0079887

(2) 0-7000 RPM gauge and (1) 0-80 Speedometer. Contains speed and tach harnesses, air temp sensor and Junction box for dual application. Black face with white numerals. Application of these gauges will depend on the individual engine model and its available sensors. Ver 7.0 software supports Mercury global dimming function, 150 4-stroke Maintenance Feature, improved user interface and standard SmartTow functionality.

BEZELS SOLD SEPARATELY. Work with all SmartCraft compatible engines. An additional junction box may be required depending on application.

SC 1000 SYSTEM TACH/SPEED (85MM) GLASS LENS GRAY FACE GAUGES

Software version 7.0 for all SC1000 Tachometers and Speedometers supports the Mercury global dimming feature, maintenance reminder feature, an improved user interface and have SmartTow standard (various features are engine specific)

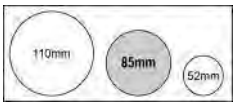

SPEEDOMETER



79-8M0079947

SC1000 80 MPH speed gauge, gray face, glass lens. Fits 85mm dia. hole.

Application of this gauge will depend on the individual engine model and its available sensors. Ver 7.0 software supports Mercury global dimming function, 150 4-stroke Maintenance Feature, improved user interface and standard SmartTow functionality.

BEZEL SOLD SEPARATELY. Works with all SmartCraft compatible engines.

79-8M0079903

SC1000 80 MPH speed gauge, gray face, glass lens. Fits 85mm dia. hole.

Application of this gauge will depend on the individual engine model and its available sensors. Ver 7.0 software supports Mercury global dimming function, 150 4-stroke Maintenance Feature, improved user interface and standard SmartTow functionality.

BEZEL SOLD SEPARATELY. Works with all SmartCraft compatible engines. BULK KIT

Priced individually, sold @ multiples of 24

SPEEDOMETER



79-8M0079902

SC1000 50 MPH Speed gauge, gray face, glass lens. Fits 85mm dia. hole.

Application of this gauge will depend on the individual engine model and its available sensors. Ver 7.0 software supports Mercury global dimming function, 150 4-stroke Maintenance Feature, improved user interface and standard SmartTow functionality.

BEZEL SOLD SEPARATELY. Works with all SmartCraft compatible engines.

TACHOMETER



79-8M0079897

SC1000 7000 RPM Tach gauge, gray face, glass lens. Fits 85mm dia. hole.

Application of this gauge will depend on the individual engine model and its available sensors. Ver 7.0 software supports Mercury global dimming function, 150 4-stroke Maintenance Feature, improved user interface and standard SmartTow functionality.

BEZEL SOLD SEPARATELY. Works with all SmartCraft compatible engines.

79-8M0079898

SC1000 7000 RPM Tach gauge, gray face, glass lens. Fits 85mm dia. hole.

Application of this gauge will depend on the individual engine model and its available sensors. Ver 7.0 software supports Mercury global dimming function, 150 4-stroke Maintenance Feature, improved user interface and standard SmartTow functionality.

BEZEL SOLD SEPARATELY. Works with all SmartCraft compatible engines. BULK KIT

Priced individually, sold @ multiples of 24

TACHOMETER



79-8M0079896

SC1000 4000 RPM Tach gauge, gray face, glass lens. Fits 85mm dia. hole.

Application of this gauge will depend on the individual engine model and its available sensors. Ver 7.0 software supports Mercury global dimming function, 150 4-stroke Maintenance Feature, improved user interface and standard SmartTow functionality.

BEZEL SOLD SEPARATELY. Works with all SmartCraft compatible engines.

SC1000 SYSTEM TACH/SPEED SINGLE ENGINE HELM KIT



79-8M0079900

(1) 0-7000 RPM gauge and (1) 0-80 Speedometer. Contains speed and tach harnesses, air temp sensor and junction box for single engine application. Gray face with white numerals. Application of this gauge will depend on the individual engine model and its available sensors. Ver 7.0 software supports Mercury global dimming function, 150 4-stroke Maintenance Feature, improved user interface and standard SmartTow functionality.

BEZELS SOLD SEPARATELY. Work with all SmartCraft compatible engines.

SC1000 SYSTEM TACH/SPEED DUAL ENGINE HELM KIT



79-8M0079901

(2) 0-7000 RPM gauges and (1) 0-80 MPH Speedometer. Contains speed and tach harnesses, J box and air temp sensor for dual application. Gray face with white numerals. Application of this gauge will depend on the individual engine model and its available sensors. Ver 7.0 software supports Mercury global dimming function, 150 4-stroke Maintenance Feature, improved user interface and standard SmartTow functionality.

BEZELS SOLD SEPARATELY. Work with all SmartCraft compatible engines. An additional junction box may be required depending on application.

SC1000 SYSTEM TACH/SPEED 85 MM BEZELS

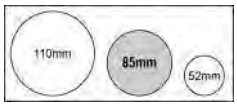

BEZEL



859074 1

Black

Fits large 3-3/8 in.(85 mm) O.D. SC1000 System gauges and MercMonitors

859074B 1

Black

Fits large 3-3/8 in.(85 mm) O.D. SC1000 System gauges and MercMonitors

Priced individually, sold @ multiples of 24

859074 2

White

Fits large 3-3/8 in.(85 mm) O.D. SC1000 System gauges and MercMonitors

859074B 2

White

Fits large 3-3/8 in.(85 mm) O.D. SC1000 System gauges and MercMonitors

Priced individually, sold @ multiples of 24

859074 3

Chrome

Fits large 3-3/8 in.(85 mm) O.D. SC1000 System gauges and MercMonitors

859074B 3

Chrome

Fits large 3-3/8 in.(85 mm) O.D. SC1000 System gauges and MercMonitors

Priced individually, sold @ multiples of 24

SC 100 GLASS LENS WHITE 52MM

SC100 System Link gauges allow you to monitor vital engine and boat functions with digital accuracy. Furnished with a fog resistant lens, these gauges can be "daisy chain" interfaced between other SmartCraft products using a plug-in connection. SC100 link gauges can be connected to a SC1000 System Tach, a MercMonitor, System Monitor, or VesselView.

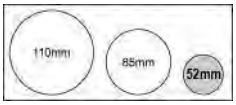

COOLANT TEMPERATURE GAUGE



79-8M0052863

Dual scale (English and Metric) temperature gauge, white face, glass lens. Fits a standard 2-1/8" (52mm) dia. hole.

Application of this gauge will depend on the individual engine model and its available sensors.

BEZEL SOLD SEPARATELY. Works with all SmartCraft compatible engines.

VOLTAGE GAUGE (12 V)



79-8M0052864

Voltage gauge (8-16V), white face, glass lens. Fits a standard 2-1/8" (52mm) dia. hole.

Application of this gauge will depend on the individual engine model and its available sensors.

BEZEL SOLD SEPARATELY. Works with all SmartCraft compatible engines.

VOLTAGE GAUGE (24 V)



79-8M0069412

Voltage gauge (16-32V), white face, glass lens. Fits a standard 2-1/8" (52mm) dia. hole. Application of this gauge will depend on the individual engine model and its available sensors.

BEZEL SOLD SEPERATELY. Used on all SmartCraft capable engines

FUEL LEVEL GAUGE

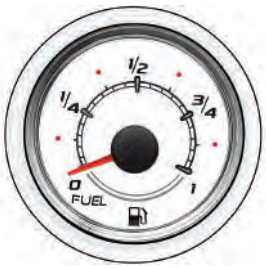

79-8M0052865

Fuel Level Gauge, white face, glass lens. Fits a standard 2-1/8" (52mm) dia. hole.

Application of this gauge will depend on the individual engine model and its available sensors.

BEZEL SOLD SEPARATELY. Works with all SmartCraft compatible engines.

FUEL LEVEL 2 GAUGE



79-8M0052866

Fuel Level 2 Gauge, white face, glass lens. Fits a standard 2-1/8" (52mm) dia. hole.
Application of this gauge will depend on the individual engine model and its available sensors.

BEZEL SOLD SEPARATELY. Works with all SmartCraft compatible engines.

FUEL FLOW GAUGE



79-8M0069416

Dual scale fuel flow gauge, white face. Fits a standard 2-1/8 in. (52 mm) dia. hole. Application of this gauge will depend on the individual engine model and its available sensors.

BEZEL SOLD SEPARATELY. Works with all SmartCraft compatible engines.

WATER LEVEL GAUGE



79-8M0052867

Water Level Gauge, white face, glass lens. Fits a standard 2-1/8" (52mm) dia. hole.

Application of this gauge will depend on the individual engine model and its available sensors.

BEZEL SOLD SEPARATELY. Works with all SmartCraft compatible engines.

WASTE LEVEL GAUGE



79-8M0052868

Waste Level Gauge, white face, glass lens. Fits a standard 2-1/8" (52mm) dia. hole.

Application of this gauge will depend on the individual engine model and its available sensors.

BEZEL SOLD SEPARATELY. Works with all SmartCraft compatible engines.

OIL PRESSURE GAUGE - 0-80 PSI



79-8M0069413

Dual scale (English and Metric) 0-80 psi oil pressure gauge, white face, glass lens. Fits a standard 2-1/8" (52mm) dia. hole. Application of this gauge will depend on the individual engine model and its available sensors.

BEZEL SOLD SEPERATELY. Used on all SmartCraft capable engines

OIL PRESSURE GAUGE - 0-100 PSI



79-8M0052869

Dual scale (English and Metric) 0-100 psi oil pressure gauge, white face, glass lens. Fits a standard 2-1/8" (52mm) dia. hole.

Application of this gauge will depend on the individual engine model and its available sensors.

BEZEL SOLD SEPARATELY. Works with all SmartCraft compatible engines.

OIL PRESSURE GAUGE - 0-150 PSI



79-8M0069414

Dual scale (English and Metric) 0-150 psi oil pressure gauge, white face, glass lens. Fits a standard 2-1/8" (52mm) dia. hole. Application of this gauge will depend on the individual engine model and its available sensors.

BEZEL SOLD SEPERATELY. Used on all SmartCraft capable engines

GEAR OIL PRESSURE GAUGE - 600 PSI



79-8M0069415

Dual scale (English and Metric) 600 psi oil pressure gauge, white face, glass lens. Fits a standard 2-1/8" (52mm) dia. hole. Application of this gauge will depend on the individual engine model and its available sensors.

BEZEL SOLD SEPERATELY. Used on all SmartCraft capable engines

TRANSMISSION OIL TEMPERATURE GAUGE

79-8M0088771

Transmission oil temperature 120-300 degree F.
White face, glass lens. Fits a standard 2-1/8" (52mm) dia. hole. Application of this gauge will depend on the individual engine model and its available sensors.

BEZEL SOLD SEPERATELY. Typically used on diesel SmartCraft capable engines.

TRIM GAUGE



79-8M0052870

Trim gauge, white face, glass lens. Fits a standard 2-1/8" (52mm) dia. hole. Application of this gauge will depend on the individual engine model and its available sensors.

BEZEL SOLD SEPARATELY. Works with all SmartCraft compatible engines.

WATER PRESSURE GAUGE



79-8M0052871

Dual scale (English and Metric) water pressure gauge, white face, glass lens. Fits a standard 2-1/8" (52mm) dia. hole.
Application of this gauge will depend on the individual engine model and its available sensors.

BEZEL SOLD SEPARATELY. Works with all SmartCraft compatible engines.

RUDDER ANGLE GAUGE



79-8M0052872

Rudder Angle gauge, white face, glass lens. Fits a standard 2-1/8" (52mm) dia. hole.
Application of this gauge will depend on the individual engine model and its available sensors.

BEZEL SOLD SEPARATELY. Works with all SmartCraft compatible engines.

OIL TEMPERATURE GAUGE

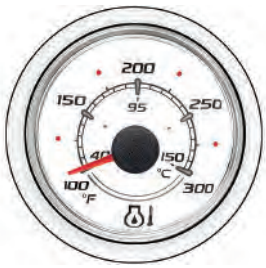

79-8M0054374

Dual scale (English and Metric) oil temperature gauge, white face, glass lens. Fits a standard 2-1/8" (52mm) dia. hole.

Application of this gauge will depend on the individual engine model and its available sensors.

BEZEL SOLD SEPARATELY. Works with all SmartCraft compatible engines.

OIL LEVEL GAUGE



79-8M0052873

Oil Level gauge, white face, glass lens. Fits a standard 2-1/8" (52mm) dia. hole.

Application of this gauge will depend on the individual engine model and its available sensors.

BEZEL SOLD SEPARATELY. Works with all SmartCraft compatible engines.

SC 100 GLASS LENS BLACK 52 MM

SC100 System Link gauges allow you to monitor vital engine and boat functions with digital accuracy. Furnished with a fog resistant lens, these gauges can be "daisy chain" interfaced between other SmartCraft products using a plug-in connection. SC100 link gauges can be connected to a SC1000 System Tach, a MercMonitor, System Monitor, or VesselView.

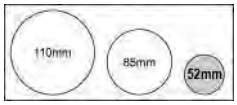

COOLANT TEMPERATURE GAUGE



79-8M0052842

Dual scale (English and Metric) coolant temperature gauge, black face, glass lens. Fits a standard 2-1/8" (52mm) dia. hole.

Application of this gauge will depend on the individual engine model and its available sensors.

BEZEL SOLD SEPARATELY. Works with all SmartCraft compatible engines.

VOLTAGE GAUGE (12 V)



79-8M0052843

Voltage gauge (8-16V), black face, glass lens. Fits a standard 2-1/8" (52mm) dia. hole.

Application of this gauge will depend on the individual engine model and its available sensors.

BEZBEZEL SOLD SEPARATELY. Works with all SmartCraft compatible engines.

VOLTAGE GAUGE (24 V)



79-8M0069426

Voltage gauge (16-32V), black face, glass lens. Fits a standard 2-1/8" (52mm) dia. hole.

Application of this gauge will depend on the individual engine model and its available sensors.

BEZEL SOLD SEPERATELY. Used on all SmartCraft capable engines

FUEL LEVEL GAUGE



79-8M0052844

Fuel Level gauge, black face, glass lens. Fits a standard 2-1/8" (52mm) dia. hole.

Application of this gauge will depend on the individual engine model and its available sensors.

BEZEL SOLD SEPARATELY. Works with all SmartCraft compatible engines.

FUEL LEVEL 2 GAUGE



79-8M0052845

Fuel Level 2 gauge, black face, glass lens. Fits a standard 2-1/8" (52mm) dia. hole.
Application of this gauge will depend on the individual engine model and its available sensors.

BEZEL SOLD SEPARATELY. Works with all SmartCraft compatible engines.

WATER LEVEL GAUGE



79-8M0052846

Water Level gauge, black face, glass lens. Fits a standard 2-1/8" (52mm) dia. hole.

Application of this gauge will depend on the individual engine model and its available sensors.

BEZEL SOLD SEPARATELY. Works with all SmartCraft compatible engines.

WASTE LEVEL GAUGE



79-8M0052847

Waste Level gauge, black face, glass lens. Fits a standard 2-1/8" (52mm) dia. hole.
Application of this gauge will depend on the individual engine model and its available sensors.

BEZEL SOLD SEPARATELY. Works with all SmartCraft compatible engines.

OIL PRESSURE GAUGE - 0-80 PSI



79-8M0069427

Dual scale (English and Metric) 0-80 psi oil pressure gauge, black face, glass lens. Fits a standard 2-1/8" (52mm) dia. hole.

Application of this gauge will depend on the individual engine model and its available sensors.

BEZEL SOLD SEPERATELY. Used on all SmartCraft capable engines

OIL PRESSURE GAUGE - 0-100 PSI



79-8M0052848

Dual scale (English and Metric) 0-100 psi oil pressure gauge, black face, glass lens. Fits a standard 2-1/8" (52mm) dia. hole.

Application of this gauge will depend on the individual engine model and its available sensors.

BEZEL SOLD SEPARATELY. Works with all SmartCraft compatible engines.

OIL PRESSURE GAUGE - 0-150 PSI



79-8M0069428

Dual scale (English and Metric) 0-150 psi oil pressure gauge, black face, glass lens. Fits a standard 2-1/8" (52mm) dia. hole.

Application of this gauge will depend on the individual engine model and its available sensors.

BEZEL SOLD SEPERATELY. Used on all SmartCraft capable engines

GEAR OIL PRESSURE GAUGE - 600 PSI



79-8M0069429

Dual scale (English and Metric) 600 psi oil pressure gauge, black face, glass lens. Fits a standard 2-1/8" (52mm) dia. hole.

Application of this gauge will depend on the individual engine model and its available sensors.

BEZEL SOLD SEPERATELY. Used on all SmartCraft capable engines.

TRANSMISSION OIL TEMPERATURE GAUGE



79-8M6002607

Transmission oil temperature 120-300 degree F.
Black face, glass lens. Fits a standard 2-1/8" (52mm) dia. hole.

Application of this gauge will depend on the individual engine model and its available sensors.

BEZEL SOLD SEPERATELY. Typically used on diesel SmartCraft capable engines.

TRIM GAUGE



79-8M0052849

Trim gauge, black face, glass lens. Fits a standard 2-1/8" (52mm) dia. hole.

Application of this gauge will depend on the individual engine model and its available sensors.

BEZEL SOLD SEPARATELY. Works with all SmartCraft compatible engines.

WATER PRESSURE GAUGE



79-8M0052850

Dual scale (English and Metric) water pressure gauge, black face, glass lens. Fits a standard 2-1/8" (52mm) dia. hole.

Application of this gauge will depend on the individual engine model and its available sensors.

BEZEL SOLD SEPARATELY. Works with all SmartCraft compatible engines.

RUDDER ANGLE GAUGE



79-8M0052851

Rudder Angle gauge, black face, glass lens. Fits a standard 2-1/8" (52mm) dia. hole.

Application of this gauge will depend on the individual engine model and its available sensors.

BEZEL SOLD SEPARATELY. Works with all SmartCraft compatible engines.

OIL TEMPERATURE GAUGE



79-8M0054360

Dual scale (English and Metric) oil temperature gauge, black face, glass lens. Fits a standard 2-1/8" (52mm) dia. hole.
Application of this gauge will depend on the individual engine model and its available sensors.
BEZEL SOLD SEPARATELY. Works with all SmartCraft compatible engines.

OIL LEVEL GAUGE



79-8M0052852

Oil Level gauge, black face, glass lens. Fits a standard 2-1/8" (52mm) dia. hole.

Application of this gauge will depend on the individual engine model and its available sensors.
BEZEL SOLD SEPARATELY. Works with all SmartCraft compatible engines.

SC 100 GLASS LENS GRAY 52 MM

SC100 System Link gauges allow you to monitor vital engine and boat functions with digital accuracy. Furnished with a fog resistant lens, these gauges can be "daisy chain" interfaced between other SmartCraft products using a plug-in connection. SC100 link gauges can be connected to a SC1000 System Tach, a MercMonitor, System Monitor, or VesselView.

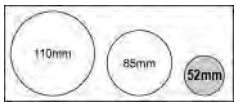

COOLANT TEMPERATURE GAUGE



79-8M0065962

Dual scale (English and Metric) temperature gauge, gray face, glass lens. Fits a standard 2-1/8" (52mm) dia. hole.

Application of this gauge will depend on the individual engine model and its available sensors.
BEZEL SOLD SEPARATELY. Works with all SmartCraft compatible engines.

VOLTAGE GAUGE



79-8M0065963

Voltage gauge, gray face, glass lens. Fits a standard 2-1/8" (52mm) dia. hole.
Application of this gauge will depend on the individual engine model and its available sensors.
BEZEL SOLD SEPARATELY. Works with all SmartCraft compatible engines.

FUEL LEVEL GAUGE



79-8M0065970

Fuel Level Gauge, gray face, glass lens. Fits a standard 2-1/8" (52mm) dia. hole.
Application of this gauge will depend on the individual engine model and its available sensors.
BEZEL SOLD SEPARATELY. Works with all SmartCraft compatible engines.

FUEL LEVEL 2 GAUGE



79-8M0065971

Fuel Level 2 Gauge, gray face, glass lens. Fits a standard 2-1/8" (52mm) dia. hole.

Application of this gauge will depend on the individual engine model and its available sensors.

BEZEL SOLD SEPARATELY. Works with all SmartCraft compatible engines.

FUEL FLOW GAUGE



79-8M0069430

Dual scale fuel flow gauge, gray face. Fits a standard 2-1/8 in. (52 mm) dia. hole. Application of this gauge will depend on the individual engine model and its available sensors.

BEZEL SOLD SEPARATELY. Works with all SmartCraft compatible engines.

WATER LEVEL GAUGE



79-8M0065972

Water Level Gauge, gray face, glass lens. Fits a standard 2-1/8" (52mm) dia. hole.

Application of this gauge will depend on the individual engine model and its available sensors.

BEZEL SOLD SEPARATELY. Works with all SmartCraft compatible engines.

WASTE LEVEL GAUGE



79-8M0065973

Waste Level Gauge, gray face, glass lens. Fits a standard 2-1/8" (52mm) dia. hole.

Application of this gauge will depend on the individual engine model and its available sensors.

BEZEL SOLD SEPARATELY. Works with all SmartCraft compatible engines.

OIL PRESSURE GAUGE



79-8M0065974

Dual scale (English and Metric) oil pressure gauge, gray face, glass lens. Fits a standard 2-1/8" (52mm) dia. hole.
Application of this gauge will depend on the individual engine model and its available sensors.

BEZEL SOLD SEPARATELY. Works with all SmartCraft compatible engines.

TRIM GAUGE



79-8M0065975

Trim gauge, gray face, glass lens. Fits a standard 2-1/8" (52mm) dia. hole. Application of this gauge will depend on the individual engine model and its available sensors.

BEZEL SOLD SEPARATELY. Works with all SmartCraft compatible engines.

WATER PRESSURE GAUGE



79-8M0065976

Dual scale (English and Metric) water pressure gauge, gray face, glass lens. Fits a standard 2-1/8" (52mm) dia. hole.

Application of this gauge will depend on the individual engine model and its available sensors.
BEZEL SOLD SEPARATELY. Works with all SmartCraft compatible engines.

RUDDER ANGLE GAUGE



79-8M0065977

Rudder Angle gauge, gray face, glass lens. Fits a standard 2-1/8" (52mm) dia. hole.

Application of this gauge will depend on the individual engine model and its available sensors.
BEZEL SOLD SEPARATELY. Works with all SmartCraft compatible engines.

OIL LEVEL GAUGE



79-8M0065979

Oil Level gauge, gray face, glass lens. Fits a standard 2-1/8" (52mm) dia. hole.

Application of this gauge will depend on the individual engine model and its available sensors.
BEZEL SOLD SEPARATELY. Works with all SmartCraft compatible engines.

OIL TEMPERATURE GAUGE



79-8M0065978

Dual scale (English and Metric) oil temperature gauge, gray face, glass lens. Fits a standard 2-1/8" (52mm) dia. hole.

Application of this gauge will depend on the individual engine model and its available sensors.
BEZEL SOLD SEPARATELY. Works with all SmartCraft compatible engines.

SC 100 SYSTEM LINK GAUGE 52 MM BEZELS

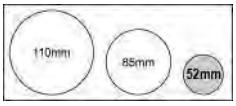

BEZEL



879871 1

Black - 52 mm
Fits small 2-1/8 in.(52 mm) O.D. SC100 System Link gauges
Priced individually, sold @ multiples of 2

879871B 1

Black
Fits small 2-1/8 in.(52 mm) O.D. SC100 System Link gauges
Priced individually, sold @ multiples of 24

879871 2

White - 52 mm
Fits small 2-1/8 in.(52 mm) O.D. SC100 System Link gauges
Priced individually, sold @ multiples of 2

879871B 2

White
Fits small 2-1/8 in.(52 mm) O.D. SC100 System Link gauges
Priced individually, sold @ multiples of 24

8M6002359

Chrome - 52 mm
Fits small 2-1/8 in.(52 mm) O.D. SC100 System Link gauges
Priced individually, sold @ multiples of 2

8M0032454

Chrome
Fits small 2.125 in.(52 mm) O.D. SC100 System Link gauges
Priced individually, sold @ multiples of 24

SC 100 GLASS LENS WHITE 85 MM

SC100 System Link gauges allow you to monitor vital engine and boat functions with digital accuracy. Furnished with a fog resistant lens, these gauges can be "daisy chain" interfaced between other SmartCraft products using a plug-in connection. SC100 link gauges can be connected to a SC1000 System Tach, a MercMonitor, System Monitor, or VesselView.

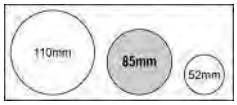

SPEEDOMETER



79-8M0052874

80 MPH/KPH speed gauge, white face, glass lens. Fits 85mm dia. hole. Application of this gauge will depend on the individual engine model and its available sensors.

BEZEL SOLD SEPARATELY. Works with all SmartCraft compatible engines.

SPEEDOMETER



79-8M0069417

120 MPH/KPH speed gauge, white face, glass lens. Fits 85mm dia. hole. Application of this gauge will depend on the individual engine model and its available sensors.

BEZEL SOLD SEPARATELY. Works with all SmartCraft compatible engines.

TACHOMETER



79-8M0069418

6000 RPM tach gauge, white face, glass lens. Fits 85 mm dia. hole.

Application of this gauge will depend on the individual engine model and its available sensors.

BEZEL SOLD SEPARATELY. Works with all SmartCraft compatible engines.

TACHOMETER



79-8M0052875

7000 RPM tach gauge, white face, glass lens. Fits 85 mm dia. hole.

Application of this gauge will depend on the individual engine model and its available sensors.

BEZEL SOLD SEPARATELY. Works with all SmartCraft compatible engines.

TACHOMETER



79-8M0069419

8000 RPM tach gauge, white face, glass lens. Fits 85mm dia. hole. Application of this gauge will depend on the individual engine model and its available sensors.

BEZEL SOLD SEPARATELY. Works with all SmartCraft compatible engines.

SC 100 GLASS LENS BLACK 85 MM

SC100 System Link gauges allow you to monitor vital engine and boat functions with digital accuracy. Furnished with a fog resistant lens, these gauges can be "daisy chain" interfaced between other SmartCraft products using a plug-in connection. SC100 link gauges can be connected to a SC1000 System Tach, a MercMonitor, System Monitor, or VesselView.

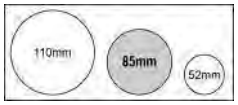

SPEEDOMETER



79-8M0052853

80 MPH/KPH Speed gauge, black face, glass lens. Fits 85mm dia. hole. Application of this gauge will depend on the individual engine model and its available sensors.

BEZEL SOLD SEPARATELY. Works with all SmartCraft compatible engines.

TACHOMETER



79-8M0052854

7000 RPM Tach gauge, black face, glass lens. Fits 85mm dia. hole.

Application of this gauge will depend on the individual engine model and its available sensors.

BEZEL SOLD SEPARATELY. Works with all SmartCraft compatible engines.

TACHOMETER



79-8M0069433

8000 RPM Tach gauge, black face, glass lens. Fits 85mm dia. hole.
Application of this gauge will depend on the individual engine model and its available sensors.

BEZEL SOLD SEPARATELY. Works with all SmartCraft compatible engines.

SC 100 GLASS LENS GRAY 85 MM

SC100 System Link gauges allow you to monitor vital engine and boat functions with digital accuracy. Furnished with a fog resistant lens, these gauges can be "daisy chain" interfaced between other SmartCraft products using a plug-in connection. SC100 link gauges can be connected to a SC1000 System Tach, a MercMonitor, System Monitor, or VesselView.

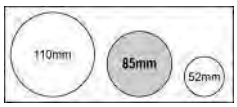

SPEEDOMETER



79-8M0065980

80 MPH/KPH speed gauge, gray face, glass lens. Fits 85mm dia. hole.

Application of this gauge will depend on the individual engine model and its available sensors.

BEZEL SOLD SEPARATELY. Works with all SmartCraft compatible engines.

SPEEDOMETER



79-8M0069459

120 MPH/KPH speed gauge, gray face, glass lens. Fits 85mm dia. hole.
Application of this gauge will depend on the individual engine model and its available sensors.

BEZEL SOLD SEPARATELY. Works with all SmartCraft compatible engines.

TACHOMETER



79-8M0069460

6000 RPM tach gauge, gray face, glass lens. Fits 85mm dia. hole.
Application of this gauge will depend on the individual engine model and its available sensors.

BEZEL SOLD SEPARATELY. Works with all SmartCraft compatible engines.

TACHOMETER



79-8M0065981

7000 RPM tach gauge, gray face, glass lens. Fits 85 mm dia. hole.

Application of this gauge will depend on the individual engine model and its available sensors.

BEZEL SOLD SEPARATELY. Works with all SmartCraft compatible engines.

TACHOMETER



79-8M0069461

8000 RPM tach gauge, gray face, glass lens. Fits 85mm dia. hole.
Application of this gauge will depend on the individual engine model and its available sensors.
BEZEL SOLD SEPARATELY. Works with all SmartCraft compatible engines.

SC 100 SYSTEM LINK GAUGE 85 MM BEZELS

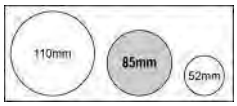

BEZEL 85 MM



879872 1

Black
Fits large 3-3/8 in.(85 mm) O.D. SC100 System Link gauges
Priced individually, sold @ multiples of 2

879872B 1

Black
Fits large 3-3/8 in.(85 mm) O.D. SC100 System Link gauges
Priced individually, sold @ multiples of 24

879872 2

White
Fits large 3-3/8 in.(85 mm) O.D. SC100 System Link gauges
Priced individually, sold @ multiples of 2

879872B 2

White
Fits large 3-3/8 in.(85 mm) O.D. SC100 System Link gauges
Priced individually, sold @ multiples of 24

879872 3

Chrome
Fits large 3-3/8 in.(85 mm) O.D. SC100 System Link gauges
Priced individually, sold @ multiples of 2

879872B 3

Chrome
Fits large 3-3/8 in.(85 mm) O.D. SC100 System Link gauges
Priced individually, sold @ multiples of 24

SC 100 GLASS LENS WHITE 110 MM

SC100 System Link gauges allow you to monitor vital engine and boat functions with digital accuracy. Furnished with a fog resistant lens, these gauges can be "daisy chain" interfaced between other SmartCraft products using a plug-in connection. SC100 link gauges can be connected to a SC1000 System Tach, a MercMonitor, System Monitor, or VesselView.

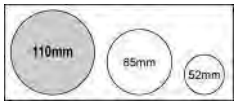

SPEEDOMETER



79-8M0052878

80 MPH/KPH speed gauge, white face, glass lens. Fits a 110mm dia. hole.

Application of this gauge will depend on the individual engine model and its available sensors.
BEZEL SOLD SEPARATELY. Works with all SmartCraft compatible engines.

TACHOMETER



79-8M0069431

8000 RPM tach gauge, white face, glass lens. Fits 110mm dia. hole.
Application of this gauge will depend on the individual engine model and its available sensors.
BEZEL SOLD SEPARATELY. Works with all SmartCraft compatible engines.

TACHOMETER



79-8M0052877

7000 RPM tach gauge, white face, glass lens. Fits a 110mm dia. hole.

Application of this gauge will depend on the individual engine model and its available sensors.
BEZEL SOLD SEPARATELY. Works with all SmartCraft compatible engines.

TACHOMETER



79-8M0052876

4000 RPM tach gauge, white face, glass lens. Fits 110mm dia. hole.

Application of this gauge will depend on the individual engine model and its available sensors.

BEZEL SOLD SEPARATELY. Works with all SmartCraft compatible engines.

TACHOMETER (NO LOGO)



79-8M0069424

4000 RPM Tach gauge, no logo, white face, glass lens. Application of this gauge will depend on the individual engine model and its available sensors.

BEZEL SOLD SEPERATELY. Used on all SmartCraft capable engines

TACHOMETER (NO LOGO)



79-8M0069432

5000 RPM Tach gauge, no logo, white face, glass lens. Fits 110mm dia. hole. Application of this gauge will depend on the individual engine model and its available sensors.

BEZEL SOLD SEPERATELY. Used on all SmartCraft capable engines

4 IN 1 GAUGE (12 V)



79-8M0052879

4 in 1 gauge, white face, glass lens. Oil pressure (0-100 psi), oil temperature, voltage (12V), and fuel level functions. Fits 110mm hole.

Application of this gauge will depend on the individual engine model and its available sensors.

BEZEL SOLD SEPARATELY. Works with all SmartCraft compatible engines.

4 IN 1 GAUGE (12 V) NO LOGO

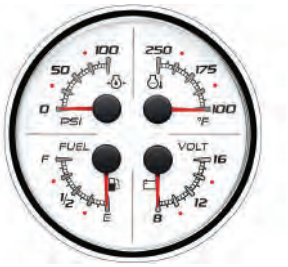

79-8M0069423

4 IN 1 gauge, no logo, white face, glass lens. Oil pressure (0-100 psi), oil temperature, voltage (12V), and fuel level functions. Fits 110mm dia. hole. Application of this gauge will depend on the individual engine model and its available sensors.

BEZEL SOLD SEPERATELY. Used on all SmartCraft capable engines

4 IN 1 GAUGE (24 V) NO LOGO

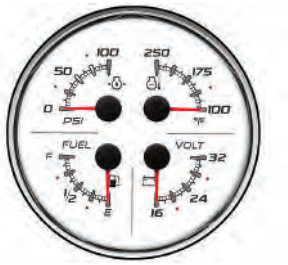

79-8M0069422

4 IN 1 gauge, no logo, white face, glass lens. Oil pressure (0-100 psi), oil temperature, voltage (24V), and fuel level functions. Fits 110mm dia. hole. Application of this gauge will depend on the individual engine model and its available sensors.

BEZEL SOLD SEPERATELY. Used on all SmartCraft capable engines

SC 100 GLASS LENS BLACK 110 MM

SC100 System Link gauges allow you to monitor vital engine and boat functions with digital accuracy. Furnished with a fog resistant lens, these gauges can be "daisy chain" interfaced between other SmartCraft products using a plug-in connection. SC100 link gauges can be connected to a SC1000 System Tach, a MercMonitor, System Monitor, or VesselView.

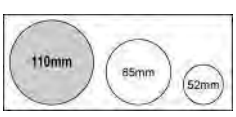

SPEEDOMETER



79-8M0052857

80 MPH/KPH speed gauge, black face, glass lens. Fits 110mm dia. hole. Application of this gauge will depend on the individual engine model and its available sensors.

BEZEL SOLD SEPARATELY. Works with all SmartCraft compatible engines.

TACHOMETER



79-8M0052856

7000 RPM Tach gauge, black face, glass lens. Fits 110mm dia. hole.

Application of this gauge will depend on the individual engine model and its available sensors.

BEZEL SOLD SEPARATELY. Works with all SmartCraft compatible engines.

TACHOMETER



79-8M0052855

4000 RPM Tach gauge, black face, glass lens. Fits 110mm dia. hole. Application of this gauge will depend on the individual engine model and its available sensors.

BEZEL SOLD SEPARATELY. Works with all SmartCraft compatible engines.

TACHOMETER (NO LOGO)



79-8M0069438

4000 RPM Tach gauge, no logo, black face, glass lens. Fits 110mm dia. hole.

Application of this gauge will depend on the individual engine model and its available sensors.

BEZEL SOLD SEPERATELY. Used on all SmartCraft capable engines

TACHOMETER (NO LOGO)



79-8M0069434

5000 RPM Tach gauge, no logo, black face, glass lens. Fits 110mm dia. hole.

Application of this gauge will depend on the individual engine model and its available sensors.

BEZEL SOLD SEPERATELY. Used on all SmartCraft capable engines

4 IN 1 GAUGE (12 V)



79-8M0052858

4 in 1 gauge, black face, glass lens. Oil pressure (0-100 psi), oil temperature, voltage (12V), and fuel level functions. Fits 110mm dia. hole.

Application of this gauge will depend on the individual engine model and its available sensors.

BEZEL SOLD SEPARATELY. Works with all SmartCraft compatible engines.

4 IN 1 GAUGE (12 V) NO LOGO



79-8M0069437

4 IN 1 gauge, no logo, black face, glass lens. Oil pressure (0-100 psi), oil temperature, voltage (12V), and fuel level functions. Fits 110mm dia. hole.

Application of this gauge will depend on the individual engine model and its available sensors.

BEZEL SOLD SEPERATELY. Used on all SmartCraft capable engines

4 IN 1 GAUGE (24 V) NO LOGO



79-8M0069436

4 IN 1 gauge, no logo, black face, glass lens. Oil pressure (0-100 psi), oil temperature, voltage (24V), and fuel level functions. Fits 110mm dia. hole.

Application of this gauge will depend on the individual engine model and its available sensors.

BEZEL SOLD SEPERATELY. Used on all SmartCraft capable engines

SC 100 GLASS LENS GRAY 110 MM

SC100 System Link gauges allow you to monitor vital engine and boat functions with digital accuracy. Furnished with a fog resistant lens, these gauges can be "daisy chain" interfaced between other SmartCraft products using a plug-in connection. SC100 link gauges can be connected to a SC1000 System Tach, a MercMonitor, System Monitor, or VesselView.

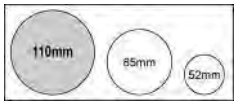

SPEEDOMETER



79-8M0065984

80 MPH/KPH speed gauge, gray face, glass lens. Fits a 110mm dia. hole.

Application of this gauge will depend on the individual engine model and its available sensors.

BEZEL SOLD SEPARATELY. Works with all SmartCraft compatible engines.

SPEEDOMETER



79-8M0069463

65 MPH/KPH speed gauge, gray face, glass lens. Fits a 110mm dia. hole. Application of this gauge will depend on the individual engine model and its available sensors.

BEZEL SOLD SEPARATELY. Works with all SmartCraft compatible engines.

TACHOMETER



79-8M0069462

8000 RPM tach gauge, gray face, glass lens. Fits a 110mm dia. hole. Application of this gauge will depend on the individual engine model and its available sensors.

BEZEL SOLD SEPARATELY. Works with all SmartCraft compatible engines.

TACHOMETER



79-8M0065983

7000 RPM tach gauge, gray face, glass lens. Fits a 110mm dia. hole. Application of this gauge will depend on the individual engine model and its available sensors.

BEZEL SOLD SEPARATELY. Works with all SmartCraft compatible engines.

TACHOMETER



79-8M0065982

4000 RPM tach gauge, gray face, glass lens. Fits 110mm dia. hole. Application of this gauge will depend on the individual engine model and its available sensors.

BEZEL SOLD SEPARATELY. Works with all SmartCraft compatible engines.

4 IN 1 GAUGE

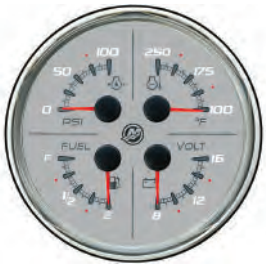

79-8M0065985

4 in 1 gauge, gray face, glass lens. Oil pressure (0-100 psi), oil temperature, voltage (12V), and fuel level functions. Fits 110mm dia. hole.

Application of this gauge will depend on the individual engine model and its available sensors.

BEZEL SOLD SEPARATELY. Works with all SmartCraft compatible engines.

SC 100 SYSTEM LINK- 110MM -BEZEL/MOUNTING HARDWARE

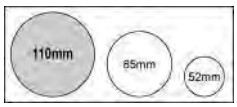

BEZEL



879949 1

Black

Fits large 4-5/16" (110 mm) O.D. SC100 System Link gauges

Priced individually, sold @ multiples of 2

879949B 1

Black

Fits large 4-5/16" (110 mm) O.D. SC100 System Link gauges

Priced individually, sold @ multiples of 24

879949 2

White

Fits large 4-5/16" (110 mm) O.D. SC100 System Link gauges

Priced individually, sold @ multiples of 2

879949B 2

White

Fits large 4-5/16" (110 mm) O.D. SC100 System Link gauges. BULK KIT - Priced individually, sold @ multiples of 24

Priced individually, sold @ multiples of 24

879949 3

Chrome

Fits large 4-5/16" (110 mm) O.D. SC100 System Link gauges

Priced individually, sold @ multiples of 2

879949B 3

Chrome

Fits large 4-5/16" (110 mm) O.D. SC100 System Link gauges. BULK KIT - Priced individually, sold @ multiples of 24

Priced individually, sold @ multiples of 24

RETAINING NUT



11-879950

Fits large 4-5/16" (110 mm) SmartCraft System gauges.

Priced individually, sold @ multiples of 2

MERCMONITOR FEATURING MERCURY GATEWAY

SMARTCRAFT® TECHNOLOGY

SmartCraft MercMonitor featuring Mercury® Gateway

Truly smart boating.

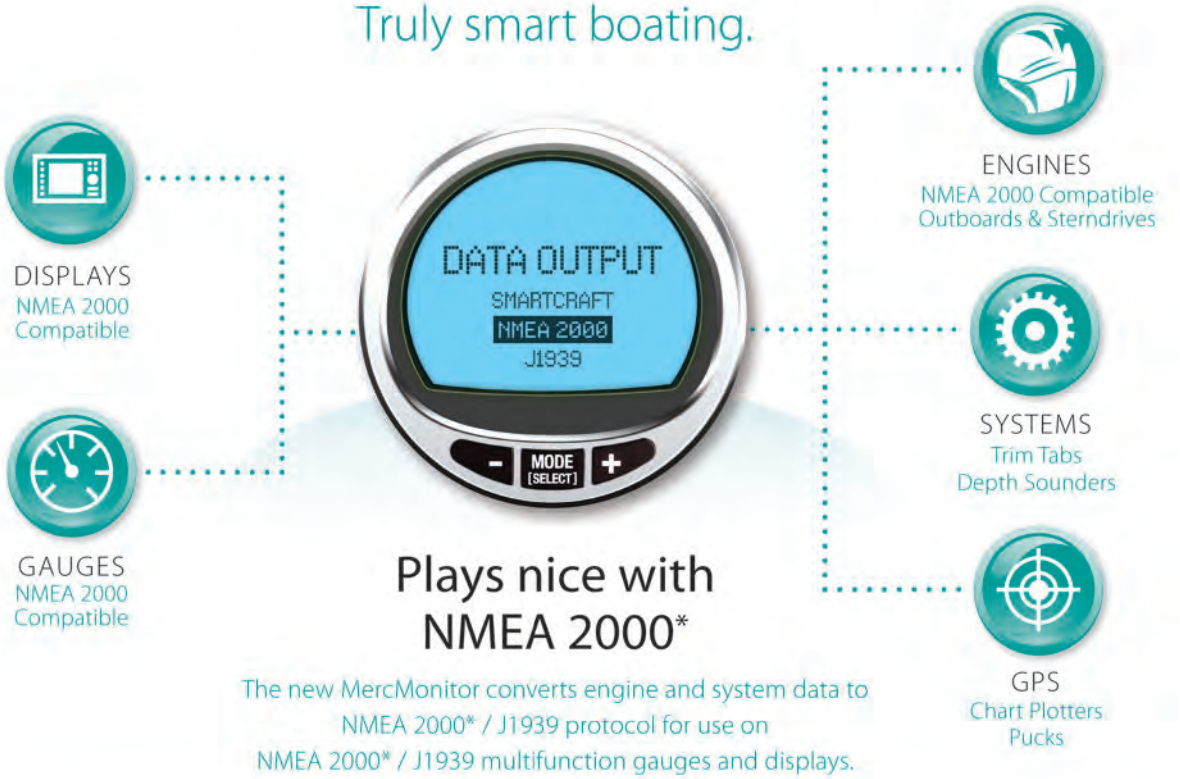

Plays nice with NMEA 2000*

The new MercMonitor converts engine and system data to NMEA 2000* / J1939 protocol for use on NMEA 2000* / J1939 multifunction gauges and displays.

NMEA 2000 / J1939 [1] Out/In Supported	Data Level
RPM	1 • 2 • 3
Voltage	1 • 2 • 3
Oil Pressure	1 • 2 • 3
Coolant Temperature	1 • 2 • 3
Tank Level Fuel	1 • 2 • 3
Trim Position	1 • 2 • 3
Water Pressure	1 • 2 • 3
Check Engine Alarm	1 • 2 • 3
Fuel Flow	2 • 3
Engine hours	2 • 3
Boost Pressure[5]	2 • 3
Oil Temperature[5]	2 • 3

NMEA 2000 Only Out/In Supported	Data Level
Multiple Tank Levels	2 • 3
Tabs	2 • 3
GPS Speed/COG/Lat-Lon (in only)	2 • 3
Depth	2 • 3
Sea Water Temp	2 • 3
Paddle speed	2 • 3
Pitot speed	2 • 3
Rudder Angle	3
Gear Pressure[6]	3
Gear Temp[6]	3
Fuel Pressure	3

[1] Features available depend on engine and installation
[2] Available on outboard engines only
[3] Only available on some Mercury DTS model engines
[4] Not available on MerCruiser engines
[5] Available on Mercury Verado
[6] Available on Cummins MerCruiser Diesel Engines
* NMEA 2000 Certification Pending
† J1939 limits signals and data levels

MERCMONITOR FEATURING ECO SCREEN

SMARTCRAFT® TECHNOLOGY

SmartCraft MercMonitor featuring ECO-Screen

Go green with ECO-Screen!



Arrow indicates best engine trim level for optimum fuel efficiency

Yellow screen warns of poor fuel economy

Arrow indicates best boat cruising RPM for optimum fuel efficiency

Green screen indicates boat is achieving best fuel economy

Would you like to get a 10 - 20% increase in fuel economy?

Mercury's new ECO feature allows you to do just that!

What is ECO-Screen?

ECO-Screen is a feature that tells you what you need to do, as a boater, to obtain the best fuel economy for your application.

How we do it!

The ECO feature is constantly monitoring engine RPM, boat speed, fuel consumption and engine trim[2] to automatically calculate and guide you to your best fuel economy settings.

Benefits

- **10 - 20% increase in fuel economy** (based on average user)
- **Automatic** - No calibration needed! The ECO feature is always working in the background to optimize your fuel economy
- **User friendly** - Easy to understand user prompts that tell you exactly what you need to do
- **Multi-color Screen**[1] - ECO-Screen uses colors and reverse video to show you, at a glance, when you've optimized your fuel economy. (Green = Optimized, Yellow = Not Optimized)

[1] Screen colors visible in low light conditions only

[2] Digital trim sender required for full functionality.

NMEA 2000 GATEWAY

SMARTCRAFT® TECHNOLOGY

Mercury NMEA 2000 Gateway

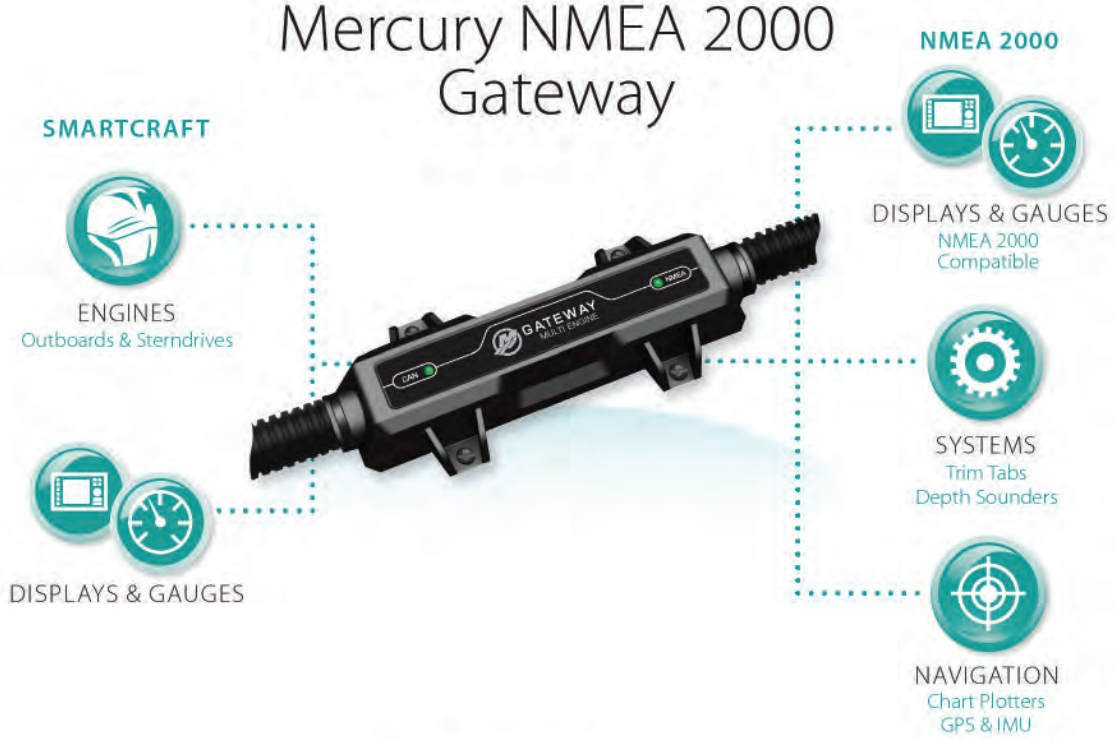

Truly smart boating.

The new Mercury Gateway (single & multi engine) converts engine and system data to NMEA 2000* protocol for use on non-Mercury gauges and displays.

OUT/IN MULTI AND SINGLE ENGINE INFORMATION	
RPM	Multiple Tank Levels
Voltage	Tabs
Oil Pressure	GPS Speed/COG/Lat-Lon
Coolant Temperature	Depth
Tank Level Fuel	Sea Water Temp
Trim Position	Paddle speed
Water Pressure	Pitot speed
Check Engine Alarm	Rudder Angle
Fuel Flow	Gear Pressure
Engine hours	Gear Temp
Boost Pressure	Fuel Pressure
Oil Temperature	

* NMEA 2000 Certification Pending

Gateway Kits	P/N
Single Engine SmartCraft Gateway	8M0065207
Multi Engine SmartCraft Gateway (1 - 4 engines)	8M0065208

Features available depend on engine and installation

NMEA 2000 GATEWAY SOFTWARE

SMARTCRAFT® TECHNOLOGY

Mercury NMEA 2000 Gateway Software

Protocol Group Numbers (PGN)

Single / Multi		
Signal	NMEA2K PGN	Mode
RPM	127498 / 0x1F20A	RX / TX
Coolant Pressure	127489 / 0x1F201	RX / TX
Speed	128259 / 0x1F503	RX / TX
RPM	127488 / 0x1F200	RX / TX
Voltage	127489 / 0x1F201	RX / TX
Coolant Temperature	127489 / 0x1F201	RX / TX
Fuel Pressure	127489 / 0x1F201	RX / TX
Fuel Level	127505 / 0x1F211	RX / TX
Fuel Tank Size	127505 / 0x1F211	RX / TX
Fuel Flow	127489 / 0x1F201	RX / TX
Oil Pressure	127489 / 0x1F201	RX / TX
Oil Temperature	127489 / 0x1F201	RX / TX
Gear Temp	127493 / 0x1F205	RX / TX
Gear Pressure	127493 / 0x1F205	RX / TX
Boost Pressure	127488 / 0x1F200	RX / TX
Trim position	127488 / 0x1F200	RX / TX
Rudder Angle	127245 / 0x1F10D	RX / TX
Depth	128267 / 0x1F50B	RX / TX
Depth Offset	128267 / 0x1F50B	RX / TX
Sea Water Temp	130310 / 0x1FD06	RX / TX
Engine hours	127489 / 0x1F201	RX / TX
Manufacturer ID	060928 / 0xEE00	RX / TX
Alarm data	127489 / 0x1F201	RX / TX
Tabs	130576 / 0x1FE10	RX / TX
Battery	127508 / 0x1F214	RX / TX
ISO Acknowledge	059392 / 0x0E800	RX / TX

Signal	NMEA2K PGN	Mode
Course over Ground	129026 / 0x9F802	RX / TX
Speed over Ground	129026 / 0x9F802	RX / TX
GPS Position	129025 / 0x1F801	RX / TX
Address Claim	060928 / 0x0EE00	RX / TX
Product Info	126996 / 0x1F014	RX / TX
Signal	**J1939 PGN**	**Mode**
RPM	61444 / 0xF004	TX
Voltage	65271 / 0xFEF7	TX
Coolant Temperature	65262 / 0xFEEE	TX
Fuel Level	65276 / 0xFEFC	TX
Fuel Flow	65266 / 0xFEF2	TX
Oil Pressure	65263 / 0xFEEF	TX
Boost Pressure	65270 / 0xFEF6	TX
Engine hours	65253 / 0xFEE5	TX
Manufacturer ID	61182 / 0xEEFE	TX
Alarm data	65226 / 0xFECA	TX

© 2012 Mercury Marine. All rights reserved.
Published 04/12 Printed in U.S.A. P/N 90-8M0071193

MERCMONITOR WITH ECO SCREEN AND GATEWAY (85MM)

MercMonitor fits in a standard SmartCraft SC1000 gauge 85 mm hole and provides constant coverage of temperature, oil level, oil pressure, water pressure, fuel level, battery voltage and major engine systems. Easily switches among the modes of RPM, fuel range in miles and kilometers, fuel flow in gallons and liters, water depth (with use of SmartCraft transducer), engine trim and engine hours. All MercMonitor products come with ECO Screen Standard. NMEA Gateway functionality comes in three different levels depending on the amount of data you want to transmit to the NMEA 2000 network.

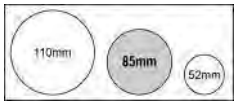

MERCMONITOR NMEA 2000 DATA LEVEL 1 KIT



79-8M0079864

MercMonitor Base verion has full SmartCraft functionality and will display all information that is available on selected SmartCraft engines. Includes ECO screen and NMEA 2000 gateway Level 1. Other features include Tri-Color LED which allows user to pick backlight and keybutton color from menu to match other gauges on vessel. Screens include customizable favorites, descriptive fault text (Gen I (2007) and newer engines only), speed, depth and much more.

BEZELS NOT INCLUDED. Software 7.0 supports Mercury global dimming function and 150 4 stroke Maintenance Feature.

MERCMONITOR NMEA 2000 DATA LEVEL 2 SMARTTOW RPM KIT



79-8M0079865

MercMonitor RPM SmartTow has full SmartCraft and SmartTow RPM functionality. software allows you to launch your boat using RPM profiles ONLY. Will display all information that is available on selected SmartCraft engines. Includes ECO screen and NMEA 2000 gateway Level 2. Other features include Tri-Color LED which allows user to pick backlight and keybutton color from menu to match other gauges on vessel. Screens include customizable favorites, descriptive fault text (Gen I (2007) and newer engines only), speed, depth and much more.

BEZELS NOT INCLUDED. Software 7.0 supports supports Mercury global dimming function and 150 4 stroke Maintenance Feature.

MERCMONITOR NMEA 2000 DATA LEVEL 3 GATEWAY PREMIER KIT



79-8M0079867

MercMonitor Gateway Premier Kit has full SmartCraft and SmartTow RPM functionality. software allows you to launch your boat using RPM profiles ONLY. Will display all information that is available on selected SmartCraft engines. Includes ECO screen and NMEA 2000 multi engine gateway Level 3. Other features include Tri-Color LED which allows user to pick backlight and keybutton color from menu to match other gauges on vessel. Screens include customizable favorites, descriptive fault text (Gen I (2007) and newer engines only), speed, depth and much more.

BEZELS NOT INCLUDED. Supports 150 4 stroke Maintenance Feature.

MERCMONITOR NMEA 2000 DATA LEVEL 3 SMARTTOW PRO KIT



79-8M0079866

MercMonitor Gateway level 3 has full SmartCraft and SmartTow PRO functionality (GPS PUCK INCLUDED). SmartTow Pro software allows you to launch your boat using SPEED and RPM profiles. Will display all information that is available on selected SmartCraft engines. Includes ECO screen and NMEA 2000 Multi Engine gateway Level 3. Other features include Tri-Color LED which allows user to pick backlight and keybutton color from menu to match other gauges on vessel. Screens include customizable favorites, descriptive fault text (Gen I (2007) and newer engines only), speed, depth and much more.

BEZELS NOT INCLUDED. Software 7.0 supports Mercury global dimming function and 150 4 stroke Maintenance Feature.

MERCMONITOR - NO NMEA 2000



79-8M0062377

Software version 4.602 has full SmartCraft functionality (INCLUDING ECO SCREEN) and will display all information that is available on selected SmartCraft engines. Includes Tri-Color LED which allows user to pick backlight and button color from menu. Screens include customizable favorites, descriptive fault text (Gen I (2007) and newer engines only), speed, depth and much more. Does not Include NMEA2000 Gateway functionality and does not include SmartTow or Cruise. Kit does include a chrome, white and black bezel.

Fits 2002 and newer OptiMax Outboards, V-6 EFI, 30-60 EFI 4-Stroke, all SmartCraft compatible MerCruiser and Mercury Racing product. Does not support NMEA2000, Universal Fault Codes or the latest Tab module.

SC1000 SYSTEM MONITOR (85MM)

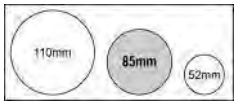

SMARTCRAFT SC1000 SYSTEM MONITOR-ROUND/ BLACK



79-892219K19

Front mount. Uses a 85 mm dia. hole. Delivers an alarm on battery, water pressure and oil pressure. May provide additional information on fuel consumption, fuel range, engine hours, coolant temperature and engine trim depending on engine type and its sensors.

Works with all SmartCraft compatible engines.

SMARTCRAFT SC1000 SYSTEM MONITOR-ROUND/ WHITE



79-892219K20

Front mount. Uses a 85mm dia. hole. Delivers an alarm on battery, water pressure and oil pressure. May provide additional information on fuel consumption, fuel range, engine hours, coolant temperature and engine trim depending on engine type and its sensors.

Works with all SmartCraft compatible engines.

SC1000 SYSTEM MONITOR (52MM)

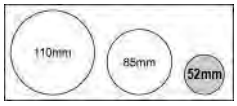

SMARTCRAFT SC1000 SYSTEM MONITOR



79-879896K21

Front mount. Uses a 52mm dia. hole. Delivers an alarm on battery, water pressure and oil pressure. May provide additional information on fuel consumption, fuel range, engine hours, coolant temperature and engine trim depending on engine type and its sensors.

Works with all SmartCraft compatible engines.

SMARTCRAFT SC1000 SYSTEM MONITOR



79-879896K19

Rear mount. Uses a custom rectangular hole and two oblong holes for mounting. Mounts from behind the dash panel and only the LCD and control buttons protrude. Hole dimensions are available in the SmartCraft Product Guide. Delivers an alarm on battery, water pressure and oil pressure. May provide additional information on fuel consumption, fuel range, engine hours, coolant temperature and engine trim depending on engine type and its sensors.

Works with all SmartCraft compatible engines.

SC1000 SYSTEM MONITOR BEZELS

BEZEL-MONITOR



879895 1

Black

Fits SC1000 System Monitor

Priced individually, sold @ multiples of 2

BEZEL MONITOR



8M6003663

White

Fits SC1000 System Monitor (Square)

MERCURY GATEWAY

MERCURY NMEA2000 SMARTCRAFT GATEWAY



84-8M0105243

The Mercury NMEA2000 SmartCraft Gateway converts Mercury engine and system data to NMEA 2000 for use on non-Mercury gauges and displays for 1 to 4 engines. It also converts applicable NMEA2000 data to SmartCraft data for display by applicable SmartCraft gauges and displays. Includes a NMEA 2000 "T" connector for quick installation.

Any instance where SmartCraft data is desired on the NMEA2000 bus. Applies to single through quad engine applications. Not required when a MercMoniotr or VesselView 4 or 7 are being used

SC1000 SYSTEM TACH/SPEED (85 MM) PLASTIC LENS GRAY FACE/BLACK BEZEL GAUGES

Tach displays engine rpm, voltage, water pressure, engine temperature, engine hours, trim, fuel flow rate in gallons or liters, and much more! Speedometer displays boat speed, clock, fuel level, oil level, mpg, gps course, water & air temp., engine synchronizer, and much more! Meters display engine alarm conditions with information on the severity of the problem. Analog and LCD readout. Gauges each require a 3-3/8 in.(85 mm) hole in the dash. The only plastic gauge style that works with 150 4 stroke Maintenance Feature

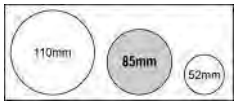

SC1000 SYSTEM SPEEDOMETER



79-889223K23

0-80 MPH. Contains System Speedometer air temp sensor and system speedometer harness. Gray face with black numerals.
New descriptive text fault displayed for easier problem recognition. (descriptive text is displayed on all SmartCraft engines Gen I (2007) and newer. Including Mercruiser and Outboard.)

Fits 2002 and newer SmartCraft compatible Outboards, SmartCraft compatible MerCruiser and SmartCraft compatible Mercury Racing product.

SC1000 SMART TOW TACH/SPEED (85MM) PLASTIC LENS GRAY FACE/BLACK BEZEL GAUGES

This section lists all of the SC1000 Products that are capable of Smart Tow RPM based and Speed based functionality. The Smart Tow products will work with all DTS engines Gen 1 (2007) and newer. Includes DTS Mercruiser and DTS Outboard. These gauges will NOT work with the 150 4 stroke Maintenance feature. (150 4 Stroke is a Mechanical engine. SmartTow works with DTS engines only.)

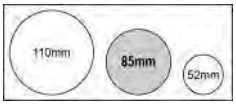

SC1000 SMART TOW PRO - SPEED BASED



79-879169K13

0 - 80 MPH. Gray face and black bezel with black numerals. Smart Tow Pro includes five profiles that allows customized launch control plus 10 additional user customizable profiles that can be named. Kit includes GPS sensor. Great for ski market and weekend sport enthusiast. New descriptive text fault displayed for easier problem recognition. Users will find profiles are programmed from soft to aggressive launch. Just hit the throttle and let the gauge do the rest.

Can be used with Gen I (2007) engines and newer. *Must be used with SC1000 System Tach Version 4.0 Gauge software and newer (version is found on back of gauge)

SC 100 SYSTEM LINK (52MM) PLASTIC LENS GRAY FACE/BLACK BEZEL GAUGES

Easily read analog System Link gauges allow you to track vital engine and boat functions with digital accuracy. Furnished with a fog proof lens, these gauges can be "daisy chain" interfaced between other SmartCraft products using a one wire plug-in connection.

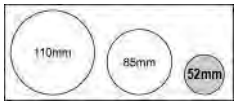

SC 100 SYSTEM LINK ENGINE TEMPERATURE GAUGE



79-879920K 1

English version engine temperature gauge, gray face. Fits a standard 2-1/8 in. (52 mm) dia. hole.

Fits 2001 and newer OptiMax Outboards, 2002 and newer V-6 EFI, 30-60 EFI 4-Stroke, all SmartCraft compatible MerCruiser and Mercury Racing product when these models have the 555 ECM. Application of this gauge will depend on the individual engine model and its available sensors.

SC 100 SYSTEM LINK ENGINE TEMPERATURE GAUGE



79-879907K 1

Metric version engine temperature gauge, gray face. Fits a standard 2-1/8 in. (52 mm) dia. hole.

Fits 2001 and newer OptiMax Outboards, 2002 and newer V-6 EFI, 30-60 EFI 4-Stroke, all SmartCraft compatible MerCruiser and Mercury Racing product when these models have the 555 ECM. Application of this gauge will depend on the individual engine model and its available sensors.

SC 100 SYSTEM LINK OIL TEMPERATURE GAUGE



79-879908K 1

English version oil temperature gauge, gray face. Fits a standard 2-1/8 in. (52 mm) dia. hole.

Fits 2001 and newer OptiMax Outboards, 2002 and newer V-6 EFI, 30-60 EFI 4-Stroke, all SmartCraft compatible MerCruiser and Mercury Racing product when these models have the 555 ECM. Application of this gauge will depend on the individual engine model and its available sensors.

SC 100 SYSTEM LINK OIL TEMPERATURE GAUGE



79-879909K 1

Metric version oil temperature gauge, gray face. Fits a standard 2-1/8 in. (52 mm) dia. hole.

Fits 2001 and newer OptiMax Outboards, 2002 and newer V-6 EFI, 30-60 EFI 4-Stroke, all SmartCraft compatible MerCruiser and Mercury Racing product when these models have the 555 ECM. Application of this gauge will depend on the individual engine model and its available sensors.

SC 100 SYSTEM LINK OIL PRESSURE GAUGE



79-879916K 1

English version oil pressure gauge, gray face. Fits a standard 2-1/8 in. (52 mm) dia. hole.

Fits 2001 and newer OptiMax Outboards, 2002 and newer V-6 EFI, 30-60 EFI 4-Stroke, all SmartCraft compatible MerCruiser and Mercury Racing product when these models have the 555 ECM. Application of this gauge will depend on the individual engine model and its available sensors.

SC 100 SYSTEM LINK OIL PRESSURE GAUGE



79-879917K 1

Metric version oil pressure gauge, gray face. Fits a standard 2-1/8 in. (52 mm) dia. hole.

Fits 2001 and newer OptiMax Outboards, 2002 and newer V-6 EFI, 30-60 EFI 4-Stroke, all SmartCraft compatible MerCruiser and Mercury Racing product when these models have the 555 ECM. Application of this gauge will depend on the individual engine model and its available sensors.

SC 100 SYSTEM LINK OIL LEVEL GAUGE



79-879911K 1

Oil level gauge, gray face. Fits a standard 2-1/8 in. (52 mm) dia. hole.

Fits 2001 and newer OptiMax Outboards, 2002 and newer V-6 EFI, 30-60 EFI 4-Stroke, all SmartCraft compatible MerCruiser and Mercury Racing product when these models have the 555 ECM. Application of this gauge will depend on the individual engine model and its available sensors.

SC 100 SYSTEM LINK FUEL LEVEL GAUGE



79-879941K 1

Fuel level gauge for a second fuel tank, gray face. Fits a standard 2-1/8 in. (52 mm) dia. hole.

Fits 2001 and newer OptiMax Outboards, 2002 and newer V-6 EFI, 30-60 EFI 4-Stroke, all SmartCraft compatible MerCruiser and Mercury Racing product when these models have the 555 ECM. Application of this gauge will depend on the individual engine model and its available sensors.

SC 100 SYSTEM LINK FUEL FLOW GAUGE



79-879912K 1

English version fuel flow gauge, gray face. Fits a standard 2-1/8 in. (52 mm) dia. hole.

Fits 2001 and newer OptiMax Outboards, 2002 and newer V-6 EFI, 30-60 EFI 4-Stroke, all SmartCraft compatible MerCruiser and Mercury Racing product when these models have the 555 ECM. Application of this gauge will depend on the individual engine model and its available sensors.

SC 100 SYSTEM LINK FUEL FLOW GAUGE



79-879913K 1

Metric version fuel flow gauge, gray face. Fits a standard 2-1/8 in. (52 mm) dia. hole.

Fits 2001 and newer OptiMax Outboards, 2002 and newer V-6 EFI, 30-60 EFI 4-Stroke, all SmartCraft compatible MerCruiser and Mercury Racing product when these models have the 555 ECM. Application of this gauge will depend on the individual engine model and its available sensors.

SC 100 SYSTEM LINK TRIM GAUGE



79-879914K 1

Trim gauge, gray face. Fits a standard 2-1/8 in. (52 mm) dia. hole.

Fits 2001 and newer OptiMax Outboards, 2002 and newer V-6 EFI, 30-60 EFI 4-Stroke, all SmartCraft compatible MerCruiser and Mercury Racing product when these models have the 555 ECM. Application of this gauge will depend on the individual engine model and its available sensors.

SC 100 SYSTEM LINK RUDDER ANGLE GAUGE



79-879915K 1

Steering gauge, gray face. Fits a standard 2-1/8 in. (52 mm) dia. hole.

Fits 2001 and newer OptiMax Outboards, 2002 and newer V-6 EFI, 30-60 EFI 4-Stroke, all SmartCraft compatible MerCruiser and Mercury Racing product when these models have the 555 ECM. Application of this gauge will depend on the individual engine model and its available sensors.

SC 100 SYSTEM LINK WATER PRESSURE GAUGE



79-879919K 1

Metric version water pressure gauge, gray face. Fits a standard 2-1/8 in. (52 mm) dia. hole.

Fits 2001 and newer OptiMax Outboards, 2002 and newer V-6 EFI, 30-60 EFI 4-Stroke, all SmartCraft compatible MerCruiser and Mercury Racing product when these models have the 555 ECM. Application of this gauge will depend on the individual engine model and its available sensors.

SC 100 SYSTEM LINK VOLTAGE GAUGE



79-879921K 1

Voltage gauge, gray face. Fits a standard 2-1/8 in. (52 mm) dia. hole.

Fits 2001 and newer OptiMax Outboards, 2002 and newer V-6 EFI, 30-60 EFI 4-Stroke, all SmartCraft compatible MerCruiser and Mercury Racing product when these models have the 555 ECM. Application of this gauge will depend on the individual engine model and its available sensors.

SC 100 SYSTEM LINK WATER LEVEL GAUGE



79-879922K 1

Water level gauge, gray face. Fits a standard 2-1/8 in. (52 mm) dia. hole.

Fits 2001 and newer OptiMax Outboards, 2002 and newer V-6 EFI, 30-60 EFI 4-Stroke, all SmartCraft compatible MerCruiser and Mercury Racing product when these models have the 555 ECM. Application of this gauge will depend on the individual engine model and its available sensors.

SC 100 SYSTEM LINK WASTE LEVEL GAUGE



79-879923K 1

Waste level gauge, gray face. Fits a standard 2-1/8 in. (52 mm) dia. hole.

Fits 2001 and newer OptiMax Outboards, 2002 and newer V-6 EFI, 30-60 EFI 4-Stroke, all SmartCraft compatible MerCruiser and Mercury Racing product when these models have the 555 ECM. Application of this gauge will depend on the individual engine model and its available sensors.

SC 100 SYSTEM LINK ENGINE SYNCHRONIZER GAUGE



79-879924K 1

Engine synchronizer gauge, gray face. Fits a standard 2-1/8 in. (52 mm) dia. hole.

Fits 2001 and newer OptiMax Outboards, 2002 and newer V-6 EFI, 30-60 EFI 4-Stroke, all SmartCraft compatible MerCruiser and Mercury Racing product when these models have the 555 ECM. Application of this gauge will depend on the individual engine model and its available sensors.

SC 100 SYSTEM LINK (85MM) PLASTIC LENS GRAY FACE/BLACK BEZEL GAUGES

Easily read analog System Link gauges allow you to track vital engine and boat functions with digital accuracy. Furnished with a fog proof lens, these gauges can be "daisy chain" interfaced between other SmartCraft products using a one wire plug-in connection.

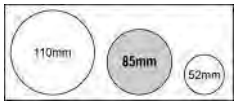

SC 100 SYSTEM LINK SPEEDOMETER



79-879906K 1

120 (mph or km/h) speedometer, gray face. Fits in a standard 3-3/8" (85 mm) dia. hole.

Fits 2001 and newer OptiMax Outboards, 2002 and newer V-6 EFI, 30-60 EFI 4-Stroke, all SmartCraft compatible MerCruiser and Mercury Racing product when these models have the 555 ECM. Application of this gauge will depend on the individual engine model and its available sensors.

SC 100 SYSTEM LINK SPEEDOMETER



79-879905K 1

80 (mph or km/h) speedometer, gray face. Fits in a standard 3-3/8" (85 mm) dia. hole.

Fits 2001 and newer OptiMax Outboards, 2002 and newer V-6 EFI, 30-60 EFI 4-Stroke, all SmartCraft compatible MerCruiser and Mercury Racing product when these models have the 555 ECM. Application of this gauge will depend on the individual engine model and its available sensors.

SC 100 SYSTEM LINK TACHOMETER



79-879903K 1

8,000 RPM tachometer, gray face. Fits in a standard 3-3/8" (85 mm) dia. hole.

Fits 2001 and newer OptiMax Outboards, 2002 and newer V-6 EFI, 30-60 EFI 4-Stroke, all SmartCraft compatible MerCruiser and Mercury Racing product when these models have the 555 ECM. Application of this gauge will depend on the individual engine model and its available sensors.

SC 100 SYSTEM LINK TACHOMETER



79-879904K 1

6,000 RPM tachometer, gray face. Fits in a standard 3-3/8" (85 mm) dia. hole.

Fits 2001 and newer OptiMax Outboards, 2002 and newer V-6 EFI, 30-60 EFI 4-Stroke, all SmartCraft compatible MerCruiser and Mercury Racing product when these models have the 555 ECM. Application of this gauge will depend on the individual engine model and its available sensors.

SC 100 SYSTEM LINK (110 MM) PLASTIC LENS GRAY FACE/BLACK BEZEL GAUGES

Easily read analog System Link gauges allow you to track vital engine and boat functions with digital accuracy. Furnished with a fog proof lens, these gauges can be "daisy chain" interfaced between other SmartCraft products using a one wire plug-in connection.

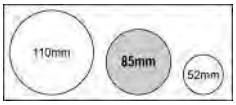

SC 100 SYSTEM LINK SPEEDOMETER



79-879945K 1

80 (mph or km/h) speedometer, gray face, large display. Fits in a 4-5/16" (110 mm) dia. hole.

Fits 2001 and newer OptiMax Outboards, 2002 and newer V-6 EFI, 30-60 EFI 4-Stroke, all SmartCraft compatible MerCruiser and Mercury Racing product when these models have the 555 ECM. Application of this gauge will depend on the individual engine model and its available sensors.

SC 100 SYSTEM LINK TACHOMETER



79-879943K 1

8,000 RPM tachometer, gray face, large display. Fits in a 4-5/16" (110 mm) dia. hole.

Fits 2001 and newer OptiMax Outboards, 2002 and newer V-6 EFI, 30-60 EFI 4-Stroke, all SmartCraft compatible MerCruiser and Mercury Racing product when these models have the 555 ECM. Application of this gauge will depend on the individual engine model and its available sensors.

SC 100 SYSTEM LINK TACHOMETER



79-879942K 1

6,000 RPM tachometer, gray face, large display. Fits in a 4-5/16" (110 mm) dia. hole.

Fits 2001 and newer OptiMax Outboards, 2002 and newer V-6 EFI, 30-60 EFI 4-Stroke, all SmartCraft compatible MerCruiser and Mercury Racing product when these models have the 555 ECM. Application of this gauge will depend on the individual engine model and its available sensors.

SC 100 SYSTEM LINK MULTIFUNCTION GAUGE



79-879946K 1

Combination water temperature, oil pressure, voltage and fuel gauge. Gray face, large display. Fits in a 4-5/16" (110 mm) dia. hole.

Fits 2001 and newer OptiMax Outboards, 2002 and newer V-6 EFI, 30-60 EFI 4-Stroke, all SmartCraft compatible MerCruiser and Mercury Racing product when these models have the 555 ECM. Application of this gauge will depend on the individual engine model and its available sensors.

SC1000 SMART TOW TACH/SPEED (85MM) PLASTIC LENS WHITE FACE/CHROME BEZEL

This section lists all of the SC1000 gauges that are capable of Smart Tow RPM based and Speed based functionality. The Smart Tow products will work with all DTS engines Gen 1 (2007) and newer. Includes DTS Mercruiser and DTS Outboard. SmartTow Gauges come in Plastic Lenses only. These gauges will NOT work with the 150 4 stroke Maintenance feature. (See Glass and Grey Plastic SC1000 products for this functionality.)

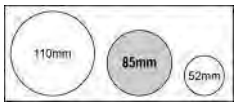

SC1000 SMART TOW PRO - SPEED BASED



79-879169K14

0 - 80 MPH. White face and Chrome bezel with black numerals. Smart Tow Pro includes five profiles that allows customized launch control plus 10 additional user customizable profiles that can be named. Kit includes GPS sensor. Great for ski market and weekend sport enthusiast. New descriptive text fault displayed for easier problem recognition. Users will find profiles are programmed from soft to aggressive launch. Just hit the throttle and let the gauge do the rest.

Can be used with Gen I (2007) engines and newer. *Must be used with SC1000 System Tach Version 4.0 Gauge software and newer (version is found on back of gauge)

SC1000 SMART TOW RPM BASED



79-898283K14

Smart Tow logic.0-7000 RPM. White face with Black numerals. Smart Tow includes five profiles that allows customized launch control. Great for ski market and weekend sport enthusiast. New descriptive text fault displayed for easier problem recognition. Users will find profiles are programmed from soft to aggressive launch. Just hit the throttle and let the gauge do the rest.

All DTS engines Gen I (2007) and newer. Includes MerCruiser and Outboard.

SC 100 SYSTEM LINK (52MM) PLASTIC LENS WHITE FACE/CHROME BEZEL GAUGES

Easily read analog System Link gauges allow you to track vital engine and boat functions with digital accuracy. Furnished with a fog resistant lens, these gauges can be "daisy chain" interfaced between other SmartCraft products using a one wire plug-in connection. SC100 link gauges require a master gauge such as an SC1000 System Tach, a MercMonitor, or a System Monitor in order to function. These gauges have chrome bezels.

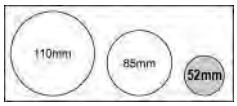

SC 100 SYSTEM LINK OIL TEMPERATURE GAUGE



79-879908K31

English version oil temperature gauge, white face with Chrome Bezel. Fits a standard 2-1/8 in. (52 mm) dia. hole.

Fits 2001 and newer OptiMax Outboards, 2002 and newer V-6 EFI, 30-60 EFI 4-Stroke, all SmartCraft compatible MerCruiser and Mercury Racing product when these models have the 555 ECM. Application of this gauge will depend on the individual engine model and its available sensors.

SC 100 SYSTEM LINK FUEL FLOW GAUGE



79-879912K31

English version fuel flow gauge, white face with Chrome Bezel. Fits a standard 2-1/8 in. (52 mm) dia. hole.

Fits 2001 and newer OptiMax Outboards, 2002 and newer V-6 EFI, 30-60 EFI 4-Stroke, all SmartCraft compatible MerCruiser and Mercury Racing product when these models have the 555 ECM. Application of this gauge will depend on the individual engine model and its available sensors.

SC 100 SYSTEM LINK RUDDER ANGLE GAUGE



79-879915K31

Steering gauge, white face/chrome bezel. Fits a standard 2-1/8 in. (52 mm) dia. hole.

Fits 2001 and newer OptiMax Outboards, 2002 and newer V-6 EFI, 30-60 EFI 4-Stroke, all SmartCraft compatible MerCruiser and Mercury Racing product when these models have the 555 ECM. Application of this gauge will depend on the individual engine model and its available sensors.

SC 100 SYSTEM LINK OIL PRESSURE GAUGE



79-879916K31

English version oil pressure gauge, white face with Chrome Bezel. Fits a standard 2-1/8 in. (52 mm) dia. hole.

Fits 2001 and newer OptiMax Outboards, 2002 and newer V-6 EFI, 30-60 EFI 4-Stroke, all SmartCraft compatible MerCruiser and Mercury Racing product when these models have the 555 ECM. Application of this gauge will depend on the individual engine model and its available sensors.

SC 100 SYSTEM LINK WATER PRESSURE GAUGE



79-879918K31

English version water pressure gauge, white face with Chrome Bezel. Fits a standard 2-1/8 in. (52 mm) dia.hole

Fits 2001 and newer OptiMax Outboards, 2002 and newer V-6 EFI, 30-60 EFI 4-Stroke, all SmartCraft compatible MerCruiser and Mercury Racing product when these models have the 555 ECM. Application of this gauge will depend on the individual engine model and its available sensors.

SC 100 SYSTEM LINK (85MM) PLASTIC LENS WHITE FACE/CHROME BEZEL GAUGES

Easily read analog System Link gauges allow you to track vital engine and boat functions with digital accuracy. Furnished with a fog resistant lens, these gauges can be "daisy chain" interfaced between other SmartCraft products using a one wire plug-in connection. SC100 link gauges require a master gauge such as an SC1000 System Tach, a MercMonitor, or a System Monitor in order to function. These gauges have chrome bezels.

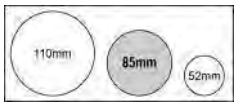

SC 100 SYSTEM LINK SPEEDOMETER



79-879905K31

80 (mph or km/h) speedometer, white face. With Chrome Bezel. Fits in a standard 3-3/8" (85 mm) dia. hole.

Fits 2001 and newer OptiMax Outboards, 2002 and newer V-6 EFI, 30-60 EFI 4-Stroke, all SmartCraft compatible MerCruiser and Mercury Racing product when these models have the 555 ECM. Application of this gauge will depend on the individual engine model and its available sensors.

SC 100 SYSTEM LINK (52MM) PLASTIC LENS WHITE FACE/WHITE BEZEL GAUGES

Easily read analog System Link gauges allow you to track vital engine and boat functions with digital accuracy. Furnished with a fog proof lens, these gauges can be "daisy chain" interfaced between other SmartCraft products using a one wire plug-in connection.

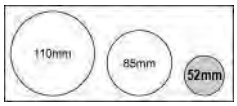

SC 100 SYSTEM LINK ENGINE TEMPERATURE GAUGE



79-879920K11

English version engine temperature gauge, white face. Fits a standard 2-1/8 in. (52 mm) dia. hole.

Fits 2001 and newer OptiMax Outboards, 2002 and newer V-6 EFI, 30-60 EFI 4-Stroke, all SmartCraft compatible MerCruiser and Mercury Racing product when these models have the 555 ECM. Application of this gauge will depend on the individual engine model and its available sensors.

SC 100 SYSTEM LINK ENGINE TEMPERATURE GAUGE



79-879907K11

Metric version engine temperature gauge, white face. Fits a standard 2-1/8 in. (52 mm) dia. hole.

Fits 2001 and newer OptiMax Outboards, 2002 and newer V-6 EFI, 30-60 EFI 4-Stroke, all SmartCraft compatible MerCruiser and Mercury Racing product when these models have the 555 ECM. Application of this gauge will depend on the individual engine model and its available sensors.

SC 100 SYSTEM LINK OIL TEMPERATURE GAUGE

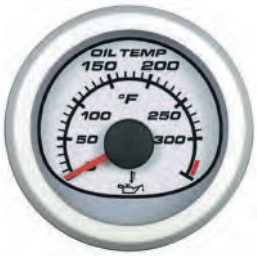

79-879908K11

English version oil temperature gauge, white face. Fits a standard 2-1/8 in. (52 mm) dia. hole.

Fits 2001 and newer OptiMax Outboards, 2002 and newer V-6 EFI, 30-60 EFI 4-Stroke, all SmartCraft compatible MerCruiser and Mercury Racing product when these models have the 555 ECM. Application of this gauge will depend on the individual engine model and its available sensors.

SC 100 SYSTEM LINK OIL TEMPERATURE GAUGE



79-879909K11

Metric version oil temperature gauge, white face. Fits a standard 2-1/8 in. (52 mm) dia. hole.

Fits 2001 and newer OptiMax Outboards, 2002 and newer V-6 EFI, 30-60 EFI 4-Stroke, all SmartCraft compatible MerCruiser and Mercury Racing product when these models have the 555 ECM. Application of this gauge will depend on the individual engine model and its available sensors.

SC 100 SYSTEM LINK OIL PRESSURE GAUGE



79-879916K11

English version oil pressure gauge, white face. Fits a standard 2-1/8 in. (52 mm) dia. hole.

Fits 2001 and newer OptiMax Outboards, 2002 and newer V-6 EFI, 30-60 EFI 4-Stroke, all SmartCraft compatible MerCruiser and Mercury Racing product when these models have the 555 ECM. Application of this gauge will depend on the individual engine model and its available sensors.

SC 100 SYSTEM LINK OIL PRESSURE GAUGE



79-879917K11

Metric version oil pressure gauge, white face. Fits a standard 2-1/8 in. (52 mm) dia. hole.

Fits 2001 and newer OptiMax Outboards, 2002 and newer V-6 EFI, 30-60 EFI 4-Stroke, all SmartCraft compatible MerCruiser and Mercury Racing product when these models have the 555 ECM. Application of this gauge will depend on the individual engine model and its available sensors.

SC 100 SYSTEM LINK OIL LEVEL GAUGE



79-879911K11

Oil level gauge, white face. Fits a standard 2-1/8 in. (52 mm) dia. hole.

Fits 2001 and newer OptiMax Outboards, 2002 and newer V-6 EFI, 30-60 EFI 4-Stroke, all SmartCraft compatible MerCruiser and Mercury Racing product when these models have the 555 ECM. Application of this gauge will depend on the individual engine model and its available sensors.

SC 100 SYSTEM LINK FUEL FLOW GAUGE



79-879912K11

English version fuel flow gauge, white face. Fits a standard 2-1/8 in. (52 mm) dia. hole.

Fits 2001 and newer OptiMax Outboards, 2002 and newer V-6 EFI, 30-60 EFI 4-Stroke, all SmartCraft compatible MerCruiser and Mercury Racing product when these models have the 555 ECM. Application of this gauge will depend on the individual engine model and its available sensors.

SC 100 SYSTEM LINK TRIM GAUGE



79-879914K11

Trim gauge, white face. Fits a standard 2-1/8 in. (52 mm) dia. hole.

Fits 2001 and newer OptiMax Outboards, 2002 and newer V-6 EFI, 30-60 EFI 4-Stroke, all SmartCraft compatible MerCruiser and Mercury Racing product when these models have the 555 ECM. Application of this gauge will depend on the individual engine model and its available sensors.

SC 100 SYSTEM LINK RUDDER ANGLE GAUGE



79-879915K11

Steering gauge, white face. Fits a standard 2-1/8 in. (52 mm) dia. hole.

Fits 2001 and newer OptiMax Outboards, 2002 and newer V-6 EFI, 30-60 EFI 4-Stroke, all SmartCraft compatible MerCruiser and Mercury Racing product when these models have the 555 ECM. Application of this gauge will depend on the individual engine model and its available sensors.

SC 100 SYSTEM LINK WATER PRESSURE GAUGE



79-879918K11

English version water pressure gauge, white face. Fits a standard 2-1/8 in. (52 mm) dia.hole

Fits 2001 and newer OptiMax Outboards, 2002 and newer V-6 EFI, 30-60 EFI 4-Stroke, all SmartCraft compatible MerCruiser and Mercury Racing product when these models have the 555 ECM. Application of this gauge will depend on the individual engine model and its available sensors.

SC 100 SYSTEM LINK WATER PRESSURE GAUGE



79-879919K11

Metric version water pressure gauge, white face. Fits a standard 2-1/8 in. (52 mm) dia. hole.

Fits 2001 and newer OptiMax Outboards, 2002 and newer V-6 EFI, 30-60 EFI 4-Stroke, all SmartCraft compatible MerCruiser and Mercury Racing product when these models have the 555 ECM. Application of this gauge will depend on the individual engine model and its available sensors.

SC 100 SYSTEM LINK VOLTAGE GAUGE



79-879921K11

Voltage gauge, white face. Fits a standard 2-1/8 in. (52 mm) dia. hole.

Fits 2001 and newer OptiMax Outboards, 2002 and newer V-6 EFI, 30-60 EFI 4-Stroke, all SmartCraft compatible MerCruiser and Mercury Racing product when these models have the 555 ECM. Application of this gauge will depend on the individual engine model and its available sensors.

SC 100 SYSTEM LINK WATER LEVEL GAUGE



79-879922K11

Water level gauge, white face. Fits a standard 2-1/8" (52 mm) dia. hole.

Fits 2001 and newer OptiMax Outboards, 2002 and newer V-6 EFI, 30-60 EFI 4-Stroke, all SmartCraft compatible MerCruiser and Mercury Racing product when these models have the 555 ECM. Application of this gauge will depend on the individual engine model and its available sensors.

SC 100 SYSTEM LINK WASTE LEVEL GAUGE



79-879923K11

Waste level gauge, white face. Fits a standard 2-1/8 in. (52 mm) dia. hole.

Fits 2001 and newer OptiMax Outboards, 2002 and newer V-6 EFI, 30-60 EFI 4-Stroke, all SmartCraft compatible MerCruiser and Mercury Racing product when these models have the 555 ECM. Application of this gauge will depend on the individual engine model and its available sensors.

SC 100 SYSTEM LINK (85MM) PLASTIC LENS WHITE FACE/WHITE BEZEL GAUGES

Easily read analog System Link gauges allow you to track vital engine and boat functions with digital accuracy. Furnished with a fog proof lens, these gauges can be "daisy chain" interfaced between other SmartCraft products using a one wire plug-in connection.

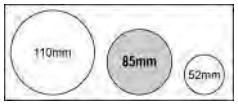

SYSTEM LINK KIT WHITE



79-892821K03

Great Value Kit for rigging a digital dash. Kit includes link harness (892821K01), tach - 8K (879903K11), speedo _ 80 MPH (879905K11), temp. (879920K11), volt (879921K11), fuel (879910K11) and trim (879914K11). This kit can be connected with the link harness directly to the engines PCM. Eliminates the need for the full function SC1000 Monitor, SC1000 Tach/Speed or SC5000 System View.

2005 DTS engines including Verado

SC 100 SYSTEM LINK SPEEDOMETER



79-879906K11

120 (mph or km/h) speedometer, white face. Fits in a standard 3-3/8" (85 mm) dia. hole.

Fits 2001 and newer OptiMax Outboards, 2002 and newer V-6 EFI, 30-60 EFI 4-Stroke, all SmartCraft compatible MerCruiser and Mercury Racing product when these models have the 555 ECM. Application of this gauge will depend on the individual engine model and its available sensors.

SC 100 SYSTEM LINK SPEEDOMETER



79-879905K11

80 (mph or km/h) speedometer, white face. Fits in a standard 3-3/8" (85 mm) dia. hole.

Fits 2001 and newer OptiMax Outboards, 2002 and newer V-6 EFI, 30-60 EFI 4-Stroke, all SmartCraft compatible MerCruiser and Mercury Racing product when these models have the 555 ECM. Application of this gauge will depend on the individual engine model and its available sensors.

SC 100 SYSTEM LINK TACHOMETER



79-879903K11

8,000 RPM tachometer, white face. Fits in a standard 3-3/8" (85 mm) dia. hole.

Fits 2001 and newer OptiMax Outboards, 2002 and newer V-6 EFI, 30-60 EFI 4-Stroke, all SmartCraft compatible MerCruiser and Mercury Racing product when these models have the 555 ECM. Application of this gauge will depend on the individual engine model and its available sensors.

SC 100 SYSTEM LINK TACHOMETER



79-879904K11

6,000 RPM tachometer, white face. Fits in a standard 3-3/8" (85 mm) dia. hole.

Fits 2001 and newer OptiMax Outboards, 2002 and newer V-6 EFI, 30-60 EFI 4-Stroke, all SmartCraft compatible MerCruiser and Mercury Racing product when these models have the 555 ECM. Application of this gauge will depend on the individual engine model and its available sensors.

SC 100 SYSTEM LINK (110 MM) PLASTIC LENS WHITE FACE/WHITE BEZEL GAUGES

Easily read analog System Link gauges allow you to track vital engine and boat functions with digital accuracy. Furnished with a fog proof lens, these gauges can be "daisy chain" interfaced between other SmartCraft products using a one wire plug-in connection.

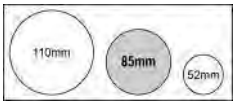

SC 100 SYSTEM LINK SPEEDOMETER



79-879945K11

80 (mph or km/h) speedometer, white face, large display. Fits in a 4-5/16" (110 mm) dia. hole.

Fits 2001 and newer OptiMax Outboards, 2002 and newer V-6 EFI, 30-60 EFI 4-Stroke, all SmartCraft compatible MerCruiser and Mercury Racing product when these models have the 555 ECM. Application of this gauge will depend on the individual engine model and its available sensors.

SC 100 SYSTEM LINK SPEEDOMETER



79-879944K11

65 (mph or km/h) speedometer, white face, large display. Fits in a 4-5/16" (110 mm) dia. hole.

Fits 2001 and newer OptiMax Outboards, 2002 and newer V-6 EFI, 30-60 EFI 4-Stroke, all SmartCraft compatible MerCruiser and Mercury Racing product when these models have the 555 ECM. Application of this gauge will depend on the individual engine model and its available sensors.

SC 100 SYSTEM LINK TACHOMETER



79-879943K11

8,000 RPM tachometer, white face, large display. Fits in a 4-5/16" (110 mm) dia. hole.

Fits 2001 and newer OptiMax Outboards, 2002 and newer V-6 EFI, 30-60 EFI 4-Stroke, all SmartCraft compatible MerCruiser and Mercury Racing product when these models have the 555 ECM. Application of this gauge will depend on the individual engine model and its available sensors.

SC 100 SYSTEM LINK TACHOMETER



79-879942K11

6,000 RPM tachometer, white face, large display. Fits in a 4-5/16" (110 mm) dia. hole.

Fits 2001 and newer OptiMax Outboards, 2002 and newer V-6 EFI, 30-60 EFI 4-Stroke, all SmartCraft compatible MerCruiser and Mercury Racing product when these models have the 555 ECM. Application of this gauge will depend on the individual engine model and its available sensors.

SC 100 SYSTEM LINK MULTIFUNCTION GAUGE



79-879946K11

Combination water temperature, oil pressure, voltage and fuel gauge.
White face, large display. Fits in a 4-5/16" (110 mm) dia. hole.

Fits 2001 and newer OptiMax Outboards, 2002 and newer V-6 EFI, 30-60 EFI 4-Stroke, all SmartCraft compatible MerCruiser and Mercury Racing product when these models have the 555 ECM. Application of this gauge will depend on the individual engine model and its available sensors.

SC1000 SYSTEM TACH/SPEED (85 MM) PLASTIC LENS BLACK FACE/CHROME BEZEL GAUGES

Tach displays engine rpm, voltage, water pressure, engine temperature, engine hours, trim, fuel flow rate in gallons or liters, and much more! Speedometer displays boat speed, clock, fuel level, oil level, mpg, gps course, water & air temp., engine synchronizer, and much more! Meters display engine alarm conditions with information on the severity of the problem. Analog and LCD readout. Gauges each require a 3-3/8 in.(85 mm) hole in the dash. These gauges will NOT work with the 150 4 stroke Maintenance feature. (See Glass and Grey Plastic SC1000 products for this functionality.)

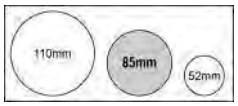

SC1000 SYSTEM TACH/SPEED SINGLE ENGINE HELM KIT



79-889223K30

(1) 0-7000 RPM gauge and (1) 0-80 Speedometer. Contains speed and tach harnesses, air temp sensor and Junction box for single application. Black face with white numerals. Descriptive fault text added. (descriptive text is displayed on all SmartCraft engines Gen I (2007) and newer. Including Mercruiser and Outboard.)

Fits 2002 and newer SmartCraft compatible Outboards, SmartCraft compatible MerCruiser and SmartCraft compatible Mercury Racing product.

SC1000 SYSTEM TACH/SPEED SINGLE ENGINE HELM KIT



79-889223K40

(1) 0-7000 RPM gauge and (1) 0-50 Speedometer. Contains speed and tach harnesses, air temp sensor and Junction box for single application. Black face with white numerals. Descriptive fault text added. (descriptive text is displayed on all SmartCraft engines Gen I (2007) and newer. Includes Mercruiser and Outboard.)

Fits 2002 and newer SmartCraft compatible Outboards, SmartCraft compatible MerCruiser and SmartCraft compatible Mercury Racing product. Ideal for single engine pontoons and fishing boats

SC1000 SYSTEM SPEEDOMETER



79-889223K25

0-50 MPH. Contains System Speedometer air temp sensor and system speedometer harness. Black face with white numerals.
Descriptive text fault displayed for easier problem recognition. (descriptive text is displayed on all SmartCraft engines Gen I (2007) and newer. Including Mercruiser and Outboard.)

Fits 2002 and newer SmartCraft compatible Outboards, SmartCraft compatible MerCruiser and SmartCraft compatible Mercury Racing product.

SC1000 SYSTEM TACHOMETER



79-889222K25

0-4000 RPM. Black face with white numerals.
New descriptive text fault displayed for easier problem recognition. (descriptive text is displayed on all SmartCraft engines Gen I (2007) and newer. Including Mercruiser and Outboard.)

Fits 2002 and newer SmartCraft compatible Outboards, SmartCraft compatible MerCruiser and SmartCraft compatible Mercury Racing product.

SC1000 SMART TOW TACH/SPEED (85MM) PLASTIC LENS BLACK FACE/CHROME BEZEL

This section lists all of the SC1000 products that are capable of Smart Tow RPM based and Speed based functionality. The Smart Tow products will work with all DTS engines Gen 1 (2007) and newer. Includes DTS Mercruiser and DTS Outboard. These gauges will NOT work with the 150 4 stroke Maintenance feature. (See Glass and Grey Plastic SC1000 products for this functionality.)

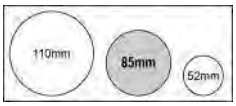

SC1000 SMART TOW PRO - SPEED BASED



79-879169K11

0 - 80 MPH. Black face with White numerals. Smart Tow Pro includes five profiles that allows customized launch control plus 10 additional user customizable profiles that can be named. Kit includes GPS sensor. Great for ski market and weekend sport enthusiast. New descriptive text fault displayed for easier problem recognition. Users will find profiles are programmed from soft to aggressive launch. Just hit the throttle and let the gauge do the rest.

Can be used with Gen I (2007) engines and newer. *Must be used with SC1000 System Tach Version 4.0 Gauge software and newer (version is found on back of gauge)

SC1000 SMART TOW RPM BASED



79-898283K11

0-7000 RPM. Black face and White numerals. Smart Tow includes five profiles that allows customized launch control. Great for ski market and weekend sport enthusiast. New descriptive text fault displayed for easier problem recognition. Users will find profiles are programmed from soft to aggressive launch. Just hit the throttle and let the gauge do the rest.

All DTS engines Gen I (2007) and newer. Includes MerCruiser and Outboard.

SC 100 SYSTEM LINK (52MM) PLASTIC LENS BLACK FACE/CHROME BEZEL GAUGES

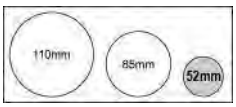

SC 100 SYSTEM LINK TRIM GAUGE



79-879914K21

Trim gauge, Black face. Fits a standard 2-1/8 in. (52 mm) dia. hole.

Fits 2001 and newer OptiMax Outboards, 2002 and newer V-6 EFI, 30-60 EFI 4-Stroke, all SmartCraft compatible MerCruiser and Mercury Racing product when these models have the 555 ECM. Application of this gauge will depend on the individual engine model and its available sensors.

SC 100 SYSTEM LINK VOLTAGE GAUGE



79-879921K21

Voltage gauge 8-16 volts, Black face. Fits a standard 2-1/8 in. (52 mm) dia. hole.

Fits 2001 and newer OptiMax Outboards, 2002 and newer V-6 EFI, 30-60 EFI 4-Stroke, all SmartCraft compatible MerCruiser and Mercury Racing product when these models have the 555 ECM. Application of this gauge will depend on the individual engine model and its available sensors.

SC 100 SYSTEM LINK ENGINE COOLANT TEMP GAUGE



79-879920K21

English version engine coolant temperature gauge 100-250 F/40-120 C dual scale, Black face. Fits a standard 2-1/8 in. (52 mm) dia. hole.

Fits 2001 and newer OptiMax Outboards, 2002 and newer V-6 EFI, 30-60 EFI 4-Stroke, all SmartCraft compatible MerCruiser and Mercury Racing product when these models have the 555 ECM. Application of this gauge will depend on the individual engine model and its available sensors.

SC 100 SYSTEM LINK FUEL LEVEL GAUGE



79-879910K21

Fuel level gauge with 0, 1/4, 1/2, 3/4, 1 increments, Black face. Fits a standard 2-1/8 in. (52 mm) dia. hole.

Fits 2001 and newer OptiMax Outboards, 2002 and newer V-6 EFI, 30-60 EFI 4-Stroke, all SmartCraft compatible MerCruiser and Mercury Racing product when these models have the 555 ECM. Application of this gauge will depend on the individual engine model and its available sensors.

SC 100 SYSTEM LINK OIL PRESSURE GAUGE



79-879916K21

English version oil pressure gauge 0-80 psi/0-5 bar dual scale, Black face. Fits a standard 2-1/8 in. (52 mm) dia. hole.

Fits 2001 and newer OptiMax Outboards, 2002 and newer V-6 EFI, 30-60 EFI 4-Stroke, all SmartCraft compatible MerCruiser and Mercury Racing product when these models have the 555 ECM. Application of this gauge will depend on the individual engine model and its available sensors.

SC 100 SYSTEM LINK RUDDER ANGLE GAUGE



79-879915K21

Steering gauge, black face. Fits a standard 2-1/8 in. (52 mm) dia. hole.

Fits 2001 and newer OptiMax Outboards, 2002 and newer V-6 EFI, 30-60 EFI 4-Stroke, all SmartCraft compatible MerCruiser and Mercury Racing product when these models have the 555 ECM. Application of this gauge will depend on the individual engine model and its available sensors.

SC 100 SYSTEM LINK (85MM) PLASTIC LENS BLACK FACE/CHROME BEZEL GAUGES

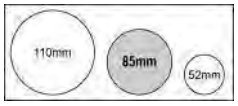

SC 100 SYSTEM LINK SPEEDOMETER



79-879905K21

80 (mph or km/h) speedometer, Black face. Fits in a standard 3-3/8" (85 mm) dia. hole.

Fits 2001 and newer OptiMax Outboards, 2002 and newer V-6 EFI, 30-60 EFI 4-Stroke, all SmartCraft compatible MerCruiser and Mercury Racing product when these models have the 555 ECM. Application of this gauge will depend on the individual engine model and its available sensors.

SC 100 SYSTEM LINK TACHOMETER



79-879903K21

8,000 RPM tachometer, Black face. Fits in a standard 3-3/8" (85 mm) dia. hole.

Fits 2001 and newer OptiMax Outboards, 2002 and newer V-6 EFI, 30-60 EFI 4-Stroke, all SmartCraft compatible MerCruiser and Mercury Racing product when these models have the 555 ECM. Application of this gauge will depend on the individual engine model and its available sensors.

SC 100 SYSTEM LINK (110MM) PLASTIC LENS BLACK FACE/CHROME BEZEL GAUGES

Easily read analog System Link gauges allow you to track vital engine and boat functions with digital accuracy. Can be easily interfaced to SmarfCraft products. New larger size to make information easier to read. Fits in a 4-5/16 " (110MM) dia. Hole.

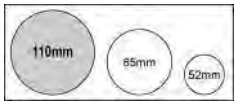

SC 100 SYSTEM LINK SPEEDOMETER



79-879944K21

50 (mph or km/h) speedometer, Black Chrome Bezel, large display. Fits in a 4-5/16" (110 mm) dia. hole.

Fits 2001 and newer OptiMax Outboards, 2002 and newer V-6 EFI, 30-60 EFI 4-Stroke, all SmartCraft compatible MerCruiser and Mercury Racing product when these models have the 555 ECM. Application of this gauge will depend on the individual engine model and its available sensors. Gen I will have descriptive fault text available on gauge.

SC 100 SYSTEM LINK MULTIFUNCTION GAUGE



79-879946K21

Combination water temperature, oil pressure, voltage and fuel gauge.
Black face, large display. Fits in a 4-5/16" (110 mm) dia. hole.

Fits 2001 and newer OptiMax Outboards, 2002 and newer V-6 EFI, 30-60 EFI 4-Stroke, all SmartCraft compatible MerCruiser and Mercury Racing product when these models have the 555 ECM. Application of this gauge will depend on the individual engine model and its available sensors.

SC1000 SYSTEM TACH/SPEED 85 MM BEZELS

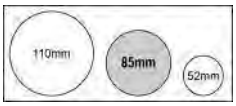

BEZEL



859074 1

Black

Fits large 3-3/8 in.(85 mm) O.D. SC1000 System gauges and MercMonitors

859074B 1

Black

Fits large 3-3/8 in.(85 mm) O.D. SC1000 System gauges and MercMonitors

Priced individually, sold @ multiples of 24

859074 2
White
Fits large 3-3/8 in.(85 mm) O.D. SC1000 System gauges and MercMonitors

859074B 2
White
Fits large 3-3/8 in.(85 mm) O.D. SC1000 System gauges and MercMonitors
Priced individually, sold @ multiples of 24

859074 3
Chrome
Fits large 3-3/8 in.(85 mm) O.D. SC1000 System gauges and MercMonitors

859074B 3
Chrome
Fits large 3-3/8 in.(85 mm) O.D. SC1000 System gauges and MercMonitors
Priced individually, sold @ multiples of 24

SC 100 SYSTEM LINK GAUGE 52 MM BEZELS

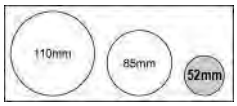

BEZEL



879871 1
Black - 52 mm
Fits small 2-1/8 in.(52 mm) O.D. SC100 System Link gauges
Priced individually, sold @ multiples of 2

879871B 1
Black
Fits small 2-1/8 in.(52 mm) O.D. SC100 System Link gauges
Priced individually, sold @ multiples of 24

879871 2
White - 52 mm
Fits small 2-1/8 in.(52 mm) O.D. SC100 System Link gauges
Priced individually, sold @ multiples of 2

879871B 2
White
Fits small 2-1/8 in.(52 mm) O.D. SC100 System Link gauges
Priced individually, sold @ multiples of 24

8M6002359
Chrome - 52 mm
Fits small 2-1/8 in.(52 mm) O.D. SC100 System Link gauges
Priced individually, sold @ multiples of 2

8M0032454
Chrome
Fits small 2.125 in.(52 mm) O.D. SC100 System Link gauges
Priced individually, sold @ multiples of 24

SC 100 SYSTEM LINK GAUGE 85 MM BEZELS

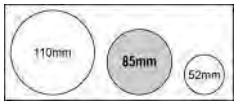

BEZEL 85 MM



879872 1
Black
Fits large 3-3/8 in.(85 mm) O.D. SC100 System Link gauges
Priced individually, sold @ multiples of 2

879872B 1
Black
Fits large 3-3/8 in.(85 mm) O.D. SC100 System Link gauges
Priced individually, sold @ multiples of 24

879872 2
White
Fits large 3-3/8 in.(85 mm) O.D. SC100 System Link gauges
Priced individually, sold @ multiples of 2

879872B 2
White
Fits large 3-3/8 in.(85 mm) O.D. SC100 System Link gauges
Priced individually, sold @ multiples of 24

879872 3
Chrome
Fits large 3-3/8 in.(85 mm) O.D. SC100 System Link gauges
Priced individually, sold @ multiples of 2

879872B 3
Chrome
Fits large 3-3/8 in.(85 mm) O.D. SC100 System Link gauges
Priced individually, sold @ multiples of 24

SC 100 SYSTEM LINK- 110MM -BEZEL/MOUNTING HARDWARE

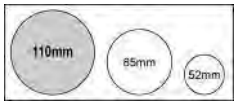

BEZEL



879949 1
Black
Fits large 4-5/16" (110 mm) O.D. SC100 System Link gauges
Priced individually, sold @ multiples of 2

879949B 1
Black
Fits large 4-5/16" (110 mm) O.D. SC100 System Link gauges
Priced individually, sold @ multiples of 24

879949 2

White

Fits large 4-5/16" (110 mm) O.D. SC100 System Link gauges

Priced individually, sold @ multiples of 2

879949B 2

White

Fits large 4-5/16" (110 mm) O.D. SC100 System Link gauges. BULK KIT - Priced individually, sold @ multiples of 24

Priced individually, sold @ multiples of 24

879949 3

Chrome

Fits large 4-5/16" (110 mm) O.D. SC100 System Link gauges

Priced individually, sold @ multiples of 2

879949B 3

Chrome

Fits large 4-5/16" (110 mm) O.D. SC100 System Link gauges. BULK KIT - Priced individually, sold @ multiples of 24

Priced individually, sold @ multiples of 24

RETAINING NUT



11-879950

Fits large 4-5/16" (110 mm) SmartCraft System gauges.

Priced individually, sold @ multiples of 2

SMARTCRAFT SYSTEM GAUGE AND MONITOR RETAINING NUTS

SMARTCRAFT GAUGE HOUSING



8M0099412

Very useful housing for when you want to install a SmartCraft gauge in an application without a dash (primarily tiller applications)

Any 85 mm SmartCraft gauge (System Tach, System Speed, MercMonitor, SC100 link gauges). This is the housing only, gauge and harness required and sold separately

RETAINING NUT



11-879900

Fits small 2-1/8 in.(52 mm) SmartCraft System gauges and monitor.

Priced individually, sold @ multiples of 2

11-879900B 1

Fits small 2-1/8 in.(52 mm) SmartCraft System gauges and monitor.

Priced individually, sold @ multiples of 24

RETAINING NUT



11-859073

Fits large 3-3/8 in.(85 mm) SmartCraft System gauges.

Priced individually, sold @ multiples of 2

11-859073B 1

Fits large 3-3/8 in.(85 mm) SmartCraft System gauges.

Priced individually, sold @ multiples of 24

RETAINING NUT



11-879950B 1

Fits large 4-5/16" (110 mm) SmartCraft System gauges.

Priced individually, sold @ multiples of 24

RETAINING NUT - REAR MOUNT



11-879902

Nut includes tabs to allow gauge to be mounted from the rear of dash panel.
Fits small 2-1/8 in.(52 mm) SmartCraft System gauges and monitor.
Priced individually, sold @ multiples of 2

GAUGE SEAL



12-879925

Fits small 2-1/8 in.(52 mm) SmartCraft System gauges and monitor.
Priced individually, sold @ multiples of 2

GAUGE SEAL



12-859656

Fits small 3-3/8 in.(85 mm) SmartCraft System gauges.
Priced individually, sold @ multiples of 2

ANALOG GAUGE INTERFACE KITS

DTS ENGINE - ANALOG GAUGE HARNESS



84-8M0095716

An analog gauge harness (15 feet) specific for DTS engines that is more cost effective than the AGI (Analog Gauge Interface) solution
DTS versions of 4.5L/6.2L MerCruiser engines only

84-8M0095826

An analog gauge harness (20 feet) specific for DTS engines that is more cost effective than the AGI (Analog Gauge Interface) solution
DTS versions of 4.5L/6.2L MerCruiser engines only

84-8M0095827

An analog gauge harness (25 feet) specific for DTS engines that is more cost effective than the AGI (Analog Gauge Interface) solution
DTS versions of 4.5L/6.2L MerCruiser engines only

84-8M0095828

An analog gauge harness (30 feet) specific for DTS engines that is more cost effective than the AGI (Analog Gauge Interface) solution
DTS versions of 4.5L/6.2L MerCruiser engines only

SMARTCRAFT RIGGING AND CONVERSION KITS

CONVERSION KIT - SMARTCRAFT SENSORS



889250K01

New kit that allows you to use SmartCraft gauges on these engines
Gen II (2007) 75 HP - 115 HP 4 stroke 1.7L engines

ANALOG TO DIGITAL CONVERSION KIT



859648A 2

Converts an analog to a digital OptiMax. Contains the sensors, harnesses and instructions needed.
Fits 2000 and newer OptiMax 2.5L engines.

ANALOG TO DIGITAL CONVERSION KIT



859649A 2

Converts an analog to a digital OptiMax. Contains the sensors, harnesses and instructions needed.
Fits 2000 OptiMax 3.0L engines.

OPTIMAX MY2001 ANALOG RIGGING KIT



8M0078157

Contains necessary components allowing a digital OptiMax to operate analog speedometer, tachometer and water pressure gauges.

Fits OptiMax engines, model year 2001 and newer.

SMARTCRAFT RIGGING KIT



8M0056278

Kit contains the following:

1257- 8742A21 Oil Tanks with Oil Senders (2)
859223 Speed/Temperature Sensor (1)
84-859743T 1 Haness to oil, fuel and paddle wheel (2)
84-879981T30 SC1000R-30, 30 ft. (9.1 meter) Data Harnesses (2)
878492A16, 6-Plug J Box (1)
859318T 2 Weather Caps (2)
881175A 1 Male Connector Cap (1)
881176A 1 Female Connector Cap (1)

For dual application. Fits 2001-2005 OptiMax Outboards, 2002-2005 V-6 EFI Outboards and Pro Max Mercury Racing Outboards (when equipped with the 555 Electronic Control Module). The oil tank bracket may only be used as a floor mounted application.

SMARTCRAFT RIGGING PREP KIT FOR OPTIMAX - SINGLE

8M0056277

Kit contains the following:

1257- 8742A21 Oil Tank with Oil Sender (1)
Harness to oil, fuel and paddle wheel (1)
84-859743T03 Boat harness for oil and fuel
Removed the 84-879982A30 from the kit . When using the 14 pin harness for non DTS, this data harness is no longer required. (Ref 84-896537__ engine to helm harness)

Fits 2006 OptiMax Outboards, 2006 V-6 EFI Outboards and Pro Max Mercury Racing Outboards (when equipped with the 555 Electronic Control Module). The oil tank bracket may only be used as a floor mounted application.

SMARTCRAFT RIGGING PREP KIT FOR OPTIMAX - SINGLE



8M0056275

Kit contains the following:

1257- 8742A21 Oil Tank with Oil Sender (1)
84-879982A30 30 ft 2RSL SmartCraft Harness (1)
84-859743A 1 Harness Asy - Boat

Fits 2006 OptiMax Outboards, 2006 V-6 EFI Outboards and Pro Max Mercury Racing Outboards (when equipped with the 555 Electronic Control Module). The oil tank bracket may only be used as a floor mounted application.

SMARTCRAFT RIGGING PREP KIT FOR OPTIMAX - SINGLE



8M0056276

Kit contains the following:

1257- 8742A21 Oil Tank with Oil Sender (1)
79-8M0034627 SC1000 SystemMonitor
84-879982A30 30 foot @RSL SmartCraft Harness

Fits 2006 OptiMax Outboards, 2006 V-6 EFI Outboards and Pro Max Mercury Racing Outboards (when equipped with the 555 Electronic Control Module). The oil tank bracket may only be used as a floor mounted application.

SMARTCRAFT ENGINE DATA KIT



8M0056279

Kit contains the following:
1257- 8742A22 Oil Tank without Oil Sender (1)
79-879896K21 Front Mount SC1000 System Monitor
Data Harness removed for 2006 (84-879982A30) - use new 14 pin harness with 84-896537 series which eliminates the data harness - 10 pin is part of primary engine to helm harness
The oil tank bracket may only be used as a floor mounted application.

Fits 2006 and newer OptiMax Outboards when using new 14 pin harness

REMOTE 3.0 US GAL (11 L) OIL TANK



1257- 8742A21

Remote 3.0 US gal (11 L) Oil Tank with sender, complete with tank, lines, floor mounting bracket and all hardware.

REMOTE 3.0 US GAL (11 L) OIL TANK



1257- 8742A22

Remote 3.0 US gal (11 L) Oil Tank without sender, complete with tank, lines, floor mounting bracket and all hardware.

Optional tank size for Mercury/Mariner 2 cycle outboards, to be used wherever a pressurized oil reservoir system is already in use. This tank and bracket assembly is only used in floor mounted applications.

REMOTE 3.0 US GAL (11 L) OIL TANK



1257- 8742A23

Remote 3.0 US gal (11 L) Oil Tank without sender, complete with tank, lines, mounting bracket and all hardware. Old Bracket Design

Optional tank size for Mercury/Mariner 2 cycle outboards, to be used wherever a pressurized oil reservoir system is already in use. This tank and bracket assembly may be optionally floor or wall mounted.

REMOTE 3.0 US GAL (11 L) OIL TANK



1257- 8742A24

Remote 3.0 US gal (11 L) Oil Tank with sender, complete with tank, lines, floor mounting bracket and all hardware. Old Bracket Design

Optional tank size for Mercury/Mariner 2 cycle outboards, to be used wherever a pressurized oil reservoir system is already in use. This tank and bracket assembly may be optionally floor or wall mounted.

REMOTE OIL TANK KIT



1257- 8742A25

Includes remote oil tank, lines, fittings and hardware to convert to a pressurized remote 2 cycle oil tank system.

Fits Mercury/Mariner 75,90,115 hp (1.5L) OptiMax outboards, model year 2004 and newer.

ANALOG INSTRUMENTS

INSTRUMENT SETS - FLAGSHIP PLUS BLACK FACE FAMILY

Visit the Flagship Plus Black Face Family Gauges section for individual details. All tachometers and speedometers fit a standard 3-3/8 in. (85 mm) diameter hole. All other gauges fit a 2-1/8 in. (54 mm) diameter hole.

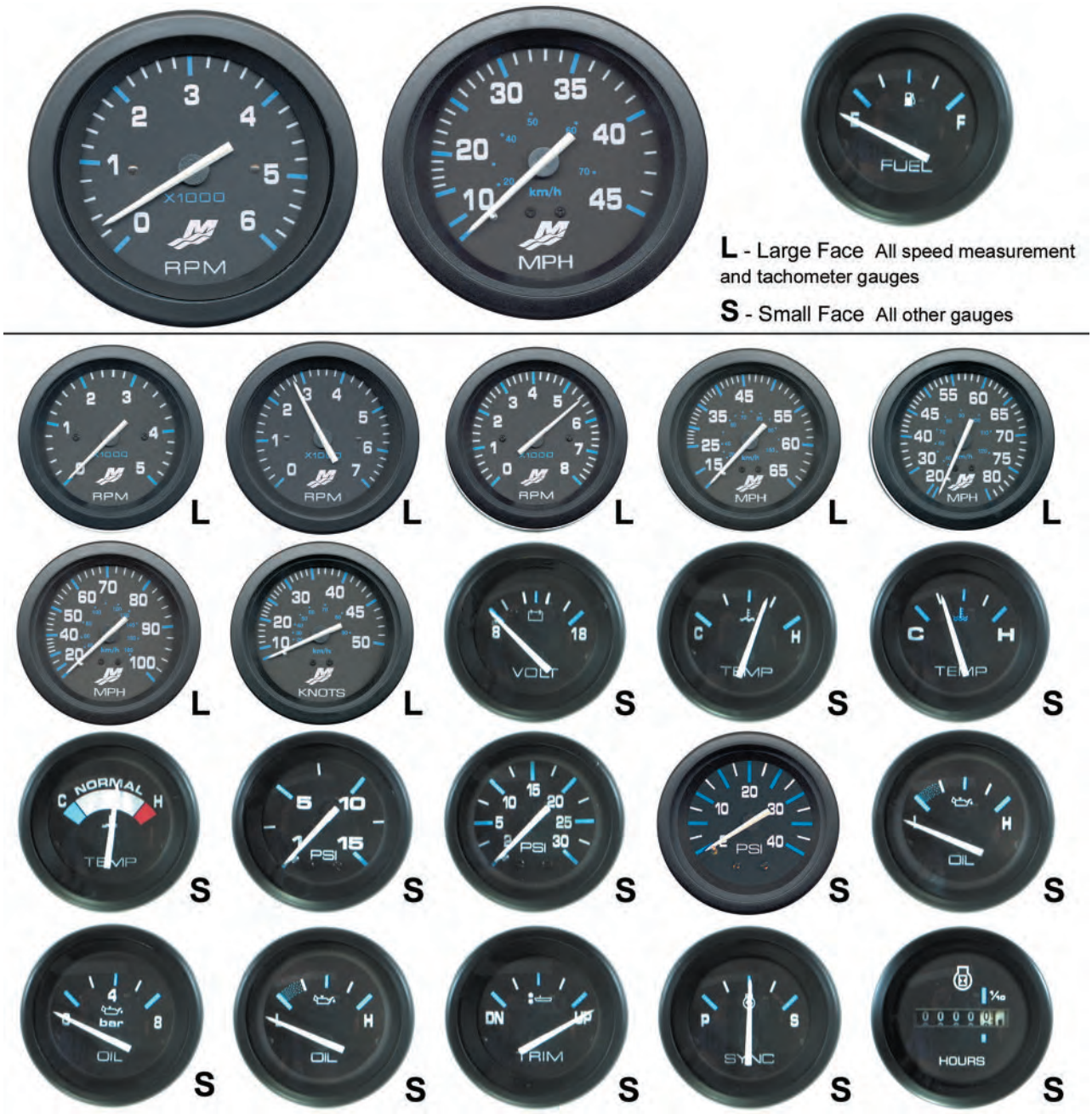

INSTRUMENT SETS - FLAGSHIP PLUS WHITE FACE FAMILY

Visit the Flagship Plus White Face Family Gauges section for individual details. All tachometers and speedometers fit a standard 3-3/8 in. (85 mm) diameter hole. All other gauges fit a 2-1/8 in. (54 mm) diameter hole.

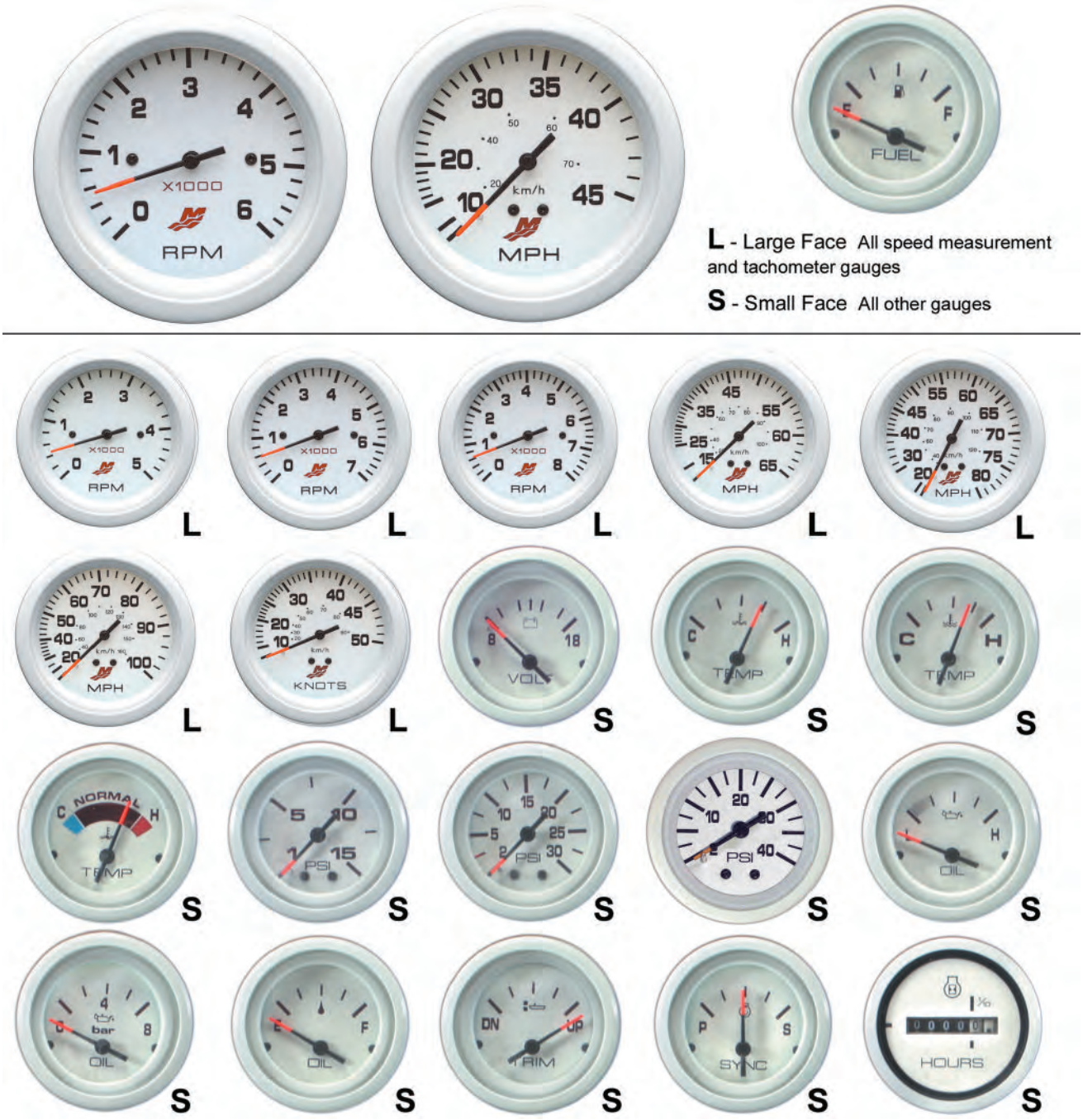

INSTRUMENT SETS - FLAGSHIP PLUS WHITE FACE/CHROME

Visit the Flagship Plus White Face with Chrome Bezel Family Gauges section for individual details. All tachometers and speedometers fit a standard 3-3/8 in. (85 mm) diameter hole. All other gauges fit a 2-1/8 in. (54 mm) diameter hole.

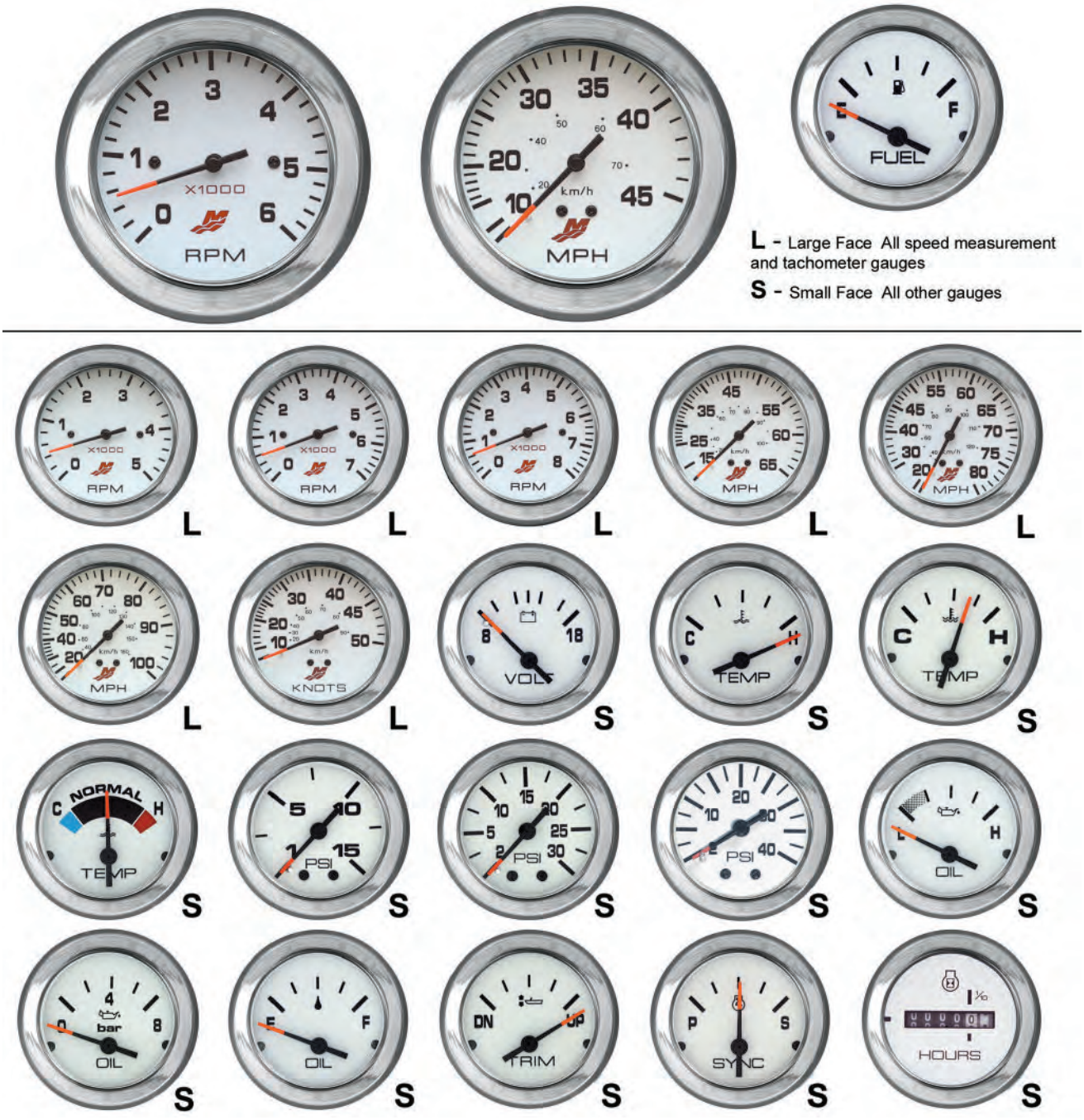

INSTRUMENT SETS - ADMIRAL PLUS BLACK FACE FAMILY

Visit the Admiral Plus Black Face Family Gauges section for individual details. All tachometers and speedometers fit a standard 3-3/8 in. (85 mm) diameter hole. All other gauges fit a 2-1/8 in. (54 mm) diameter hole.







L - Large Face All speed measurement and tachometer gauges

S - Small Face All other gauges



INSTRUMENT SETS - ADMIRAL PLUS BLACK FACE/CHROME

Visit the Admiral Family Gauges section for specific gauges. All Tachometers and Speedometers fit 3 3/8 inch(85 MM) diameter hole. All other guages fit 2 1/8 inch (52 MM) diameter hole. Gauges have studs and metal brackets.







L - Large Face All speed measurement and tachometer gauges

S - Small Face All other gauges



L L L L L

L S S S S

S S S S S

S S

INSTRUMENT SETS - ADMIRAL PLUS WHITE FACE FAMILY

Visit the Admiral Plus White Face Family Gauges section for individual details. All tachometers and speedometers fit a standard 3-3/8 in. (85 mm) diameter hole. All other gauges fit a 2-1/8 in. (54 mm) diameter hole.







L - Large Face All speed measurement and tachometer gauges

S - Small Face All other gauges

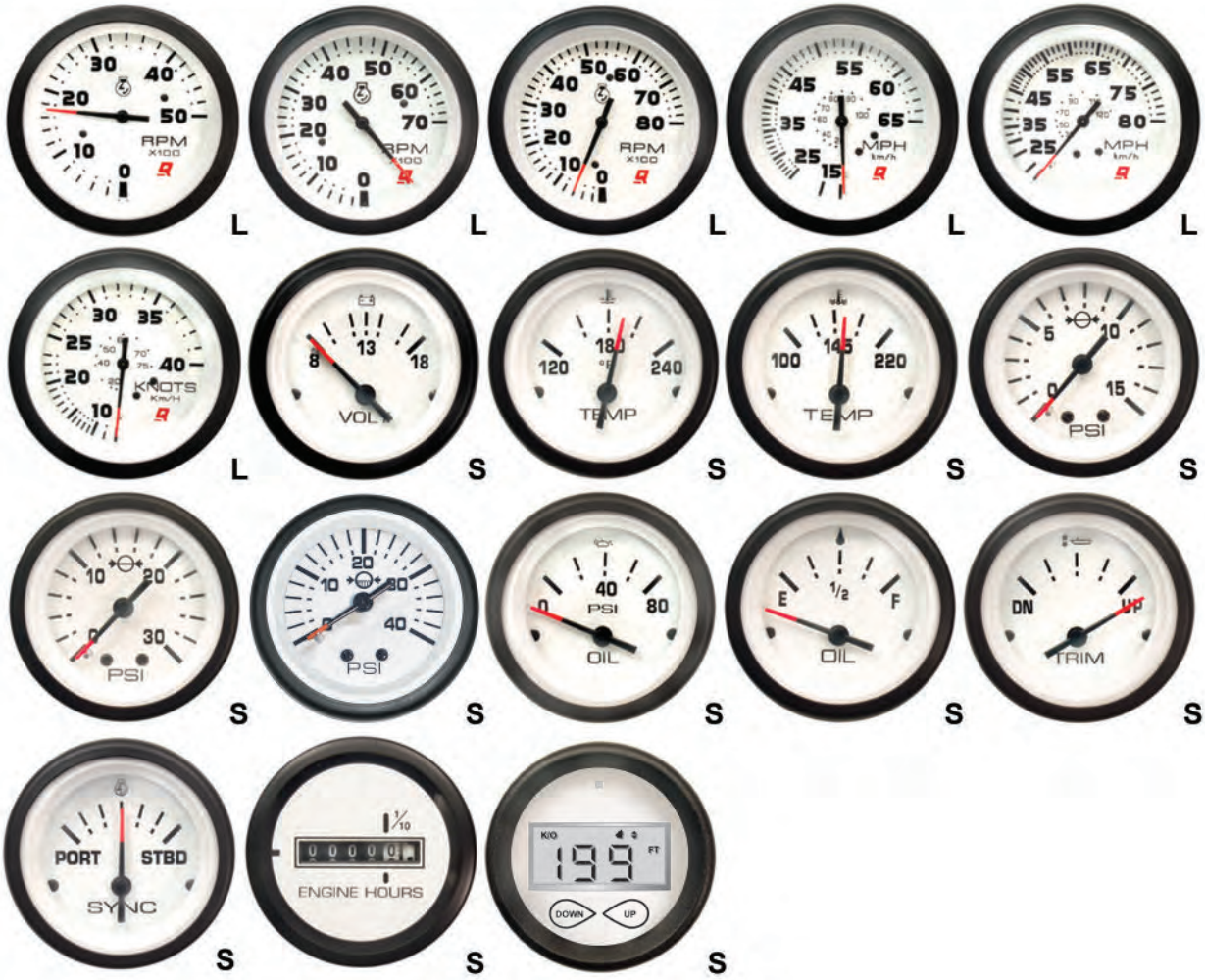

INSTRUMENT SETS - INTERNATIONAL II FAMILY

Visit the International II Family Gauges section for individual details. All tachometers and speedometers fit a standard 3-3/8 in. (85 mm) diameter hole. All other gauges fit a 2-1/8 in. (54 mm) diameter hole.

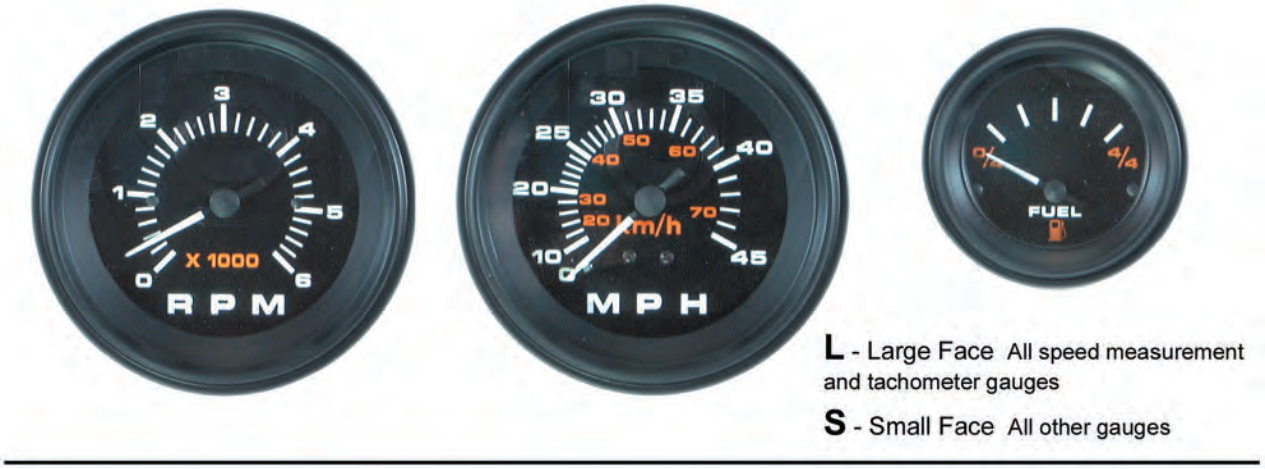

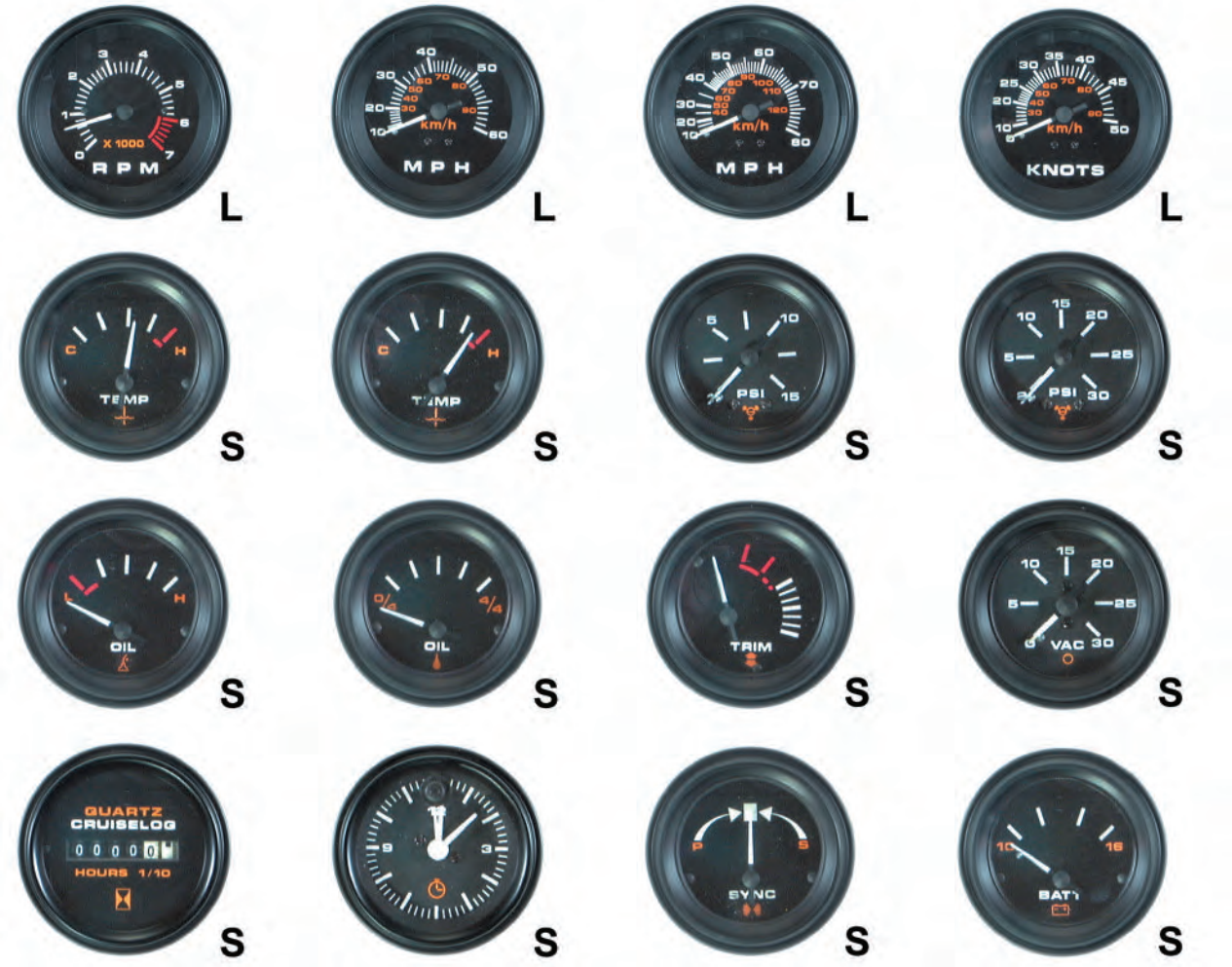

ANALOG GAUGE INTERFACE - DIGITAL ENGINES

Converts digital signal to analog

DTS ENGINE - ANALOG GAUGE HARNESS



84-8M0095716

An analog gauge harness (15 feet) specific for DTS engines that is more cost effective than the AGI (Analog Gauge Interface) solution

DTS versions of 4.5L/6.2L MerCruiser engines only

84-8M0095826

An analog gauge harness (20 feet) specific for DTS engines that is more cost effective than the AGI (Analog Gauge Interface) solution

DTS versions of 4.5L/6.2L MerCruiser engines only

84-8M0095827

An analog gauge harness (25 feet) specific for DTS engines that is more cost effective than the AGI (Analog Gauge Interface) solution

DTS versions of 4.5L/6.2L MerCruiser engines only

84-8M0095828

An analog gauge harness (30 feet) specific for DTS engines that is more cost effective than the AGI (Analog Gauge Interface) solution

DTS versions of 4.5L/6.2L MerCruiser engines only

ANALOG GAUGE INTERFACE KIT



892486K08

Used on 14-pin engines to convert a digital sensor signal into analog for Tachometer, Oil Pressure/Oil Level, Water Temperature, Trim, and Fuel Level analog gauges. There is also a connection for SC100 Link Gauges.

Fits SmartCraft compatible 14-pin engines

ANALOG GAUGE INTERFACE (AGI) KIT



892486K07

Includes AGI Module Assembly, Harness and hardware.
For installations using analog gauges instead of SmartCraft. Use with analog tachometer, coolant temp, oil pressure or level, trim and fuel level.

Race MerCruiser or outboard engines in single or multiple engine installations plus MerCruiser 496Mag/Mag HO engines.

Mercury Branded

ANALOG GAUGE INTERFACE (AGI) KIT



892486K04

For installations using analog gauges instead of SmartCraft. Use with analog tachometer,coolant temp, oil temp, oil pressure or fuel pressure gauges.

Race MerCruiser engines with the 14 pin Deutsch connector engine wiring harness. One AGI kit per engine required.

ANALOG GAUGE IINTERFACE MODULE

Image not Available.

892486T04

Replacement AGI Module: analog outputs for tach, fuel level, trim position, block temperature and oil pressure.

Must have digital sensors on SmartCraft engine in order for these to be converted to analog outputs. CDS service tool used to enable Tach Link output (which can be either digital link data or analog trim)

VESSEL ANALOG GAUGE INTERFACE (AGI) KIT



892486K05

For installations using analog gauges instead of SmartCraft. Use with analog tab position (port & starboard), fuel level (two fuel tanks) and trim position gauges.

Race MerCruiser engines with the 14 pin Deutsch connector engine wiring harness. One AGI kit per boat required.

TROLL CONTROL- DASH MOUNTED- ANALOG



87-8M0083439

Troll Control will allow you to have the same functions that you get from the SmartCraft Digital gauges and adjust the speed of the boat. By pushing the button up or down, you can feather your speed every 10 RPM. Go from idle to 1000 RPM or anywhere in between. (some engine can actually go lower than idle (75-115 4 stroke(Walleye), 135-200 HP Verado 4 cylinder and 3.0L Optimax) This kit will be used in analog gauge installations. RPM will reset to idle when more than 2-3% movement occurs at the throttle (TPS)

Can be used with any Analog Gauge installation without a J Box. "Y" harness is included in kit to connect to main engine hanress. This kit can be used with any SmartCraft compatable Mercury Engine.

CONVERSION KIT - SMARTCRAFT SENSORS



889250K01

New kit that allows you to use SmartCraft gauges on these engines
Gen II (2007) 75 HP - 115 HP 4 stroke 1.7L engines

PITOT SENSOR KIT



8M0059530

Components needed to add pitot for speedometer gauges
150 4 Stroke Engines

MONITOR PANELS FOR DIESELS

PRIMARY STATION MONITOR PANEL



806385T

Warning lights are provided for low oil pressure, excessive coolant temperature, insufficient alternator output and glow plug activation.
Fits 1.7L MS & MI 120 and 4.2 MS & MI (200 & 230)

PRIMARY STATION MONITOR PANEL



861014

Warning lights are provided for low oil pressure, excessive coolant temperature, insufficient alternator output, glow plug activation & check engine light.
Fits 1997 and newer 2.8 ES & EI 165 and 4.2 ES & EI (250 & 230)

TACHOMETER SELECTION AND SETTINGS CHARTS

Tachometer Application

Model	Description	Flagship (Black Face)	Flagship (White Face)	QSI	International II	Generic
MerCruiser MCM/MIE Gasoline Engines	6000 RPM	79-895283A03	79-895283A23	N.L.A.	79-895283Q43	N/A
	8000 RPM	79-895283A06	79-859675A11	N.L.A.	79-895283Q45	N/A
MerCruiser D1.7L DTI, D2.8L & D4.2L D-tronic	ALL	79-895283A03	79-895283A23	N.L.A.	N/A	N/A
MerCruiser D3.0, D3.6L & D4.2L	1994 and Newer	79-895283A02	N/A	79-805289A 1	N/A	N/A
MerCruiser D7.3L D-Tronic	1997 and Newer	79-895283A02	N/A	79-805289A 1	N/A	N/A

Model	Description	Flagship (Black Face)	Flagship (White Face)	QSI	International II	Generic
Mercury/Mariner 4-Stroke Outboards	6000 RPM	79-895283A03	79-895283A23	N.L.A.	79-895283Q43	N/A
	8000 RPM	79-895283A06	79-859675A11	N.L.A.	79-895283Q45	N/A
Mercury/Mariner 20 HP and Above (2 cycle)	6000 RPM	79-895283A03	79-895283A23	N.L.A.	79-895283Q43	N/A
	8000 RPM	79-895283A06	79-859675A11	N.L.A.	79-895283Q45	N/A
Mercury/Mariner Optimax	6000 RPM(1)	79-895283A03	79-895283A23	N.L.A.	79-895283Q43	N/A
	8000 RPM(1)	79-895283A06	79-859675A11	N.L.A.	79-895283Q45	N/A
Mariner 8-40 HP (Japanese import)	Manual start w/ lighting coil	N/A	N/A	N/A	N/A	N/A
Mariner 9.9-60 HP (Japanese import)	Electric start / 2 cylinder	N/A	N/A	N/A	N/A	N/A
Force 3	50cc	N/A	N/A	N/A	N/A	N/A
Force 40 HP and Above	6000 RPM	79-895283A03	79-895283A23	N.L.A.	79-895283Q43	N/A
	8000 RPM	79-895283A06	79-859675A11	N.L.A.	79-895283Q45	N/A

(1) Correct harness required for optimum performance

Tachometer Settings

Model	Country	Serial # Range	Positive Pulses Per Crank Revolution	Poles	(Flagship, Admiral, International II & Commodore	(QSI Series) Tachometer Switch Setting	(Force 79-817030A 1) Tachometer Switch Setting
Mercury/Mariner (2-stroke) 6 thru 25 HP (U.S. Orig			4	8	4P	3	N/A
Mercury/Mariner (4-stroke) 8 and 9.9 HP			3	6	3P	2	N/A
Mercury/Mariner (2-stroke) 30/40 HP	USA	0G053314 and up	6	12	6P	4	N/A
Mercury/Mariner 35 and 40 HP (2 Cyl.)	USA	5823918 and up	4	8	4P	3	N/A
	BEL	9298955 and up	4	8	4P	3	N/A
	AUS	8070639 and up	4	8	4P	3	N/A
	CAN	7169337 and up	4	8	4P	3	N/A
Mercury/Mariner (4-stroke) 25 thru 90 HP			6	12	6P	4	N/A
Mercury/Mariner (2-stroke) 45 thru V-6 (U.S. Origi			6	12	6P	4	N/A
Force 35			-	20	N/A	N/A	1
Force 35 HP and higher with Mercury ignition			6	12	6P	4	2
MerCruiser 4 cyl. gasoline engine			2	N/A	4C	1	N/A
MerCruiser 6 cyl. gasoline engine			3	N/A	6C	2	N/A
MerCruiser 8 cyl. gasoline engine			4	N/A	8C	3	N/A

FLAGSHIP PLUS BLACK FACE FAMILY

Large gauge - fits 3-3/8 in.(86 mm) hole in dash. Small gauge - fits 2-1/8 in.(54 mm) hole in dash. 12 volt system. Tachometer selection and settings charts are located following the color group images.

FLAGSHIP INSTRUMENT SET



79-895283A01

Anti-fog lens. Black face and black bezel; blue graduations. Set includes 0-6000 RPM tachometer, oil pressure gauge, battery meter and water temperature gauge. All illuminated. Mounting hardware also included.

For sterndrives and inboards only with 12 volt system.

Mercury Branded, Box Point of Sale Packaged.

FLAGSHIPTACHOMETER KIT



79-895283A02

Anti-fog lens. 0-5000 RPM. 270 degree dial sweep. Black face and Black bezel: Blue graduations. Outboards require a tachometer harness or ignition/choke assembly for connection. Fits 3-3/8 in. (85 mm) hole in dash.

Diesel Engines only

Mercury Branded, Box Point of Sale Packaged.

FLAGSHIPTACHOMETER KIT



79-895283A03

Anti-fog lens. 0-6000 RPM. 270 degree dial sweep. Black face and Black bezel: Blue graduations. Outboards require a tachometer harness or ignition/choke assembly for connection. Fits 3-3/8 in. (85 mm) hole in dash.

For various Mercury Outboard and MCM products. Will require AGI converter for Verado (Digital) engines

Mercury Branded, Box Point of Sale Packaged.

FLAGSHIP TACHOMETER

79-895283B01

Anti-fog lens. 0-6000 RPM. 270 degree dial sweep. Black face and bezel; blue graduations. Outboards require a tachometer harness or ignition/choke assembly for connection. Fits 3-3/8 in. (85 mm) hole in dash. Priced and packaged in quantities of 24 pcs.

Fits all MCM/MIE gasoline engines and D1.7L DTI & D2.8L/D4.2L D-Tronic diesel engines; also fits various outboard engines 8hp and higher. See application chart for specific engine models.

Mercury Branded, Box Point of Sale Packaged.

FLAGSHIPTACHOMETER KIT



79-895283A05

Anti-fog lens. 0-7000 RPM. 270 degree dial sweep. Black face and Black bezel: Blue graduations. Outboards require a tachometer harness or ignition/choke assembly for connection. Fits 3-3/8 in. (85 mm) hole in dash.

For various Mercury Outboards and MCM products. Will require AGI converter with Verado (Digital) engines

Mercury Branded, Box Point of Sale Packaged.

FLAGSHIP TACHOMETER

79-895283B03

Anti-fog lens. 0-7000 RPM. 270 degree dial sweep. Black face and bezel: blue graduations. Outboards require a tachometer harness or ignition/choke assembly for connection. Fits 3-3/8 in. (85 mm) hole in dash. Priced and packaged in quantities of 24 pcs.

Fits all MCM/MIE gasoline engines; also fits various outboard engines 8hp and higher. See application chart for specific engine models.

Mercury Branded

FLAGSHIPTACHOMETER KIT



79-895283A06

Anti-fog lens. 0-8000 RPM. 270 degree dial sweep. Black face and Black bezel: Blue graduations. Outboards require a tachometer harness or ignition/choke assembly for connection. Fits 3-3/8 in. (85 mm) hole in dash.

for various Mercury Outboards and MCM products. Will require AGI converter with Verado (Digital) engines

Mercury Branded, Box Point of Sale Packaged.

FLAGSHIP SPEEDOMETER



79-895285A01

Anti-fog lens. 10-45 MPH. 270 degree dial sweep. Black face and Black bezel; White/Blue graduations. Includes 20 ft.(6.1 m) of tubing. Fits 3-3/8 in. (86 mm) hole in dash.

Mercury Branded, Box Point of Sale Packaged.

79-895285B01

Anti-fog lens. 10-45 MPH. 270 degree dial sweep. Black face and bezel; blue graduations. Includes 20 ft.(6.1 m) of tubing. Fits 3-3/8 in. (85 mm) hole in dash. Pricing and packaging will be in qyuantities of 24 pcs.

Mercury Branded, Box Point of Sale Packaged.

FLAGSHIP SPEEDOMETER



79-895285A03

Anti-fog lens. 10-65 MPH. 270 degree dial sweep. Black face and Black bezel; White/Blue graduations. Includes 20 ft.(6.1 m) of tubing. Fits 3-3/8 in. (85 mm) hole in dash.

Mercury Branded, Box Point of Sale Packaged.

FLAGSHIP SPEEDOMETER



79-895285A04

Anti-fog lens. 10-80 MPH. 270 degree dial sweep. Black face and Black bezel; White/Blue graduations. Includes 20 ft.(6.1 m) of tubing. Fits 3-3/8 in. (85 mm) hole in dash.

Mercury Branded, Box Point of Sale Packaged.

FLAGSHIP SPEEDOMETER



79-895285A06

Anti-fog lens. 10-100 MPH. 270 degree dial sweep. Black face and Black bezel; White/Blue graduations. Includes 20 ft.(6.1 m) of tubing. Fits 3-3/8 in. (85 mm) hole in dash.

Mercury Branded, Box Point of Sale Packaged.

FLAGSHIP SPEEDOMETER



79-895285A08

Anti-fog lens. 10- 50 knots. 270 degree dial sweep. Black face and Black bezel; White/Blue graduations. Includes 20 ft.(6.1 m) of tubing. Fits 3-3/8 in. (85 mm) hole in dash.

Mercury Branded, Box Point of Sale Packaged.

DIGITAL DEPTH GAUGE KIT



79-879292A01

Black face and black bezel. Digital depth readout to 199 feet, display is backlit for night operation. Easy addition to any boat. Fits in a cutout for standard 2 in.(51 mm) gauge. Kit includes adjustable alarm, transom-mounted/inside-hull-mounted transducer. Easy to follow instructions. The affordable way to add more fun and safety to boating.

Available in Multiple bezel colors

Mercury Branded, Box Point of Sale Packaged.

BEZEL 52 MM



879292001

Bezel-Gold 2 inch (52 MM) Bezel is a twist fit that has a round shape. Used on Depth Sounders only

BEZEL 52 MM



879292002

Bezel-Chrome 2 inch (52 MM) Bezel is a twist fit that has a round shape. Used on Depth Sounders only

FLAGSHIP VOLT METER



79-895286A01

Anti-fog lens. Black face and Black bezel; White/Blue graduations. Outboards require a tachometer harness or ignition/choke assembly for connection.

Mercury Branded, Box Point of Sale Packaged.

79-895286B01

Anti-fog lens. Black face and Black bezel; White/Blue graduations. Outboards require a tachometer harness or ignition/choke assembly for connection. Pricing and packaging will be in qyuantities of 24 pcs.

Mercury Branded, Box Point of Sale Packaged.

FLAGSHIP WATER TEMPERATURE GAUGE



79-895287A01

Anti-fog lens. 120 deg.-240 deg.F gauge. Black face and Black bezel; White/Blue graduations.

Fits all MCM/MIE gasoline engines and Mercury/Mariner V-6 outboards. Sender, if not already installed on the outboard, must be purchased separately.

Mercury Branded, Box Point of Sale Packaged.

FLAGSHIP WATER TEMPERATURE GAUGE



79-895287A02

Anti-fog lens. 60 deg.-200 deg.F gauge. Black face and Black bezel; White/Blue graduations.

Fits Mercury/Mariner 25 thru 115 FourStroke, 225 FourStroke, 40 (3 & 4 cyl.), 45, 50/60 (3 cyl.), and 70 to 125 hp ; and 1993 and newer Force outboards (Force models must order sender FA299791) Sender need to be ordered seperately

Mercury Branded, Box Point of Sale Packaged.

FLAGSHIP WATER TEMPERATURE GAUGE



79-895287A03

Anti-fog lens. 100 deg.-240 deg.F gauge. Black face and Black bezel; White/Blue graduations.

Diesel

Mercury Branded, Box Point of Sale Packaged.

FLAGSHIP WATER PRESSURE GAUGE



79-895288A01

Anti-fog lens. 1 to 15 psi gauge with quick-connect terminals for connection to light. Black face and bezel; blue graduations. Complete kit. Includes 25 ft.(7.6 m) of tubing and hardware.
Replacement hose not sold separate, obtain locally.

Fits Mercury/Mariner 25 E and EL (U.S. S/N 0C192155 and above; Belgium S/N 9548742 and above), 30 to 125 (except four stroke models), 1998 and older V-6 (3.0L), and Force 40/50.

Mercury Branded, Box Point of Sale Packaged.

79-895288A02

Anti-fog lens. 1 to 15 psi gauge with quick-connect terminals for connection to light. Black face and bezel; blue graduations. Replacement gauge only

Fits Mercury/Mariner 25 E and EL (U.S. S/N 0C192155 and above; Belgium S/N 9548742 and above), 30 to 125 (except four stroke models), 1998 and older V-6 (3.0L), and Force 40/50.

Mercury Branded, Box Point of Sale Packaged.

FLAGSHIP WATER PRESSURE GAUGE



79-895288A03

Anti-fog lens. 2 to 30 psi gauge with quick-connect terminals for connection to light. Black face and Black bezel with Blue/White graduations. Complete kit. Includes 25 ft.(7.6 m) of tubing and hardware.
Replacement hose not sold separate, obtain locally.

Fits Mercury/Mariner 25/30/40/45/50/75/90/115/225 (4-stroke), all V-6 (except 3.0L 1998 and older) ; and Force 75, 90 and 120. The 75/90/115/225 FourStroke outboards require a reducer fitting p/n 22-86306.

Mercury Branded, Box Point of Sale Packaged.

79-895288A04

Anti-fog lens. 2 to 30 psi gauge with quick-connect terminals for connection to light. Black face and Black bezel with Blue/White graduations. Replacement Gauge only

Fits Mercury/Mariner 25/30/40/45/50/75/90/115/225 (4-stroke), all V-6 (except 3.0L 1998 and older) ; and Force 75, 90 and 120. The 75/90/115/225 FourStroke outboards require a reducer fitting p/n 22-86306.

Mercury Branded, Box Point of Sale Packaged.

FLAGSHIP WATER PRESSURE GAUGE



79-895288A05

Anti-fog lens. 2 to 40 psi gauge with quick-connect terminals for connection to light. Black face and bezel; blue graduations. Complete kit. Includes 25 ft.(7.6 m) of tubing and hardware.
Replacement hose not sold separate, obtain locally.

Fits 75-115 hp EFI FourStroke Outboards, serial number 1B366823 & above.

Mercury Branded, Box Point of Sale Packaged.

79-895288A06

Anti-fog lens. 2 to 40 psi gauge with quick-connect terminals for connection to light. Black face and bezel; blue graduations.. Replacement gauge only.

Fits 75-115 hp EFI FourStroke Outboards, serial number 1B366823 & above.

Mercury Branded, Box Point of Sale Packaged.

FLAGSHIP OIL PRESSURE GAUGE



79-895289A01

Anti-fog lens. Black face and Black bezel; Blue/White graduations.

Fits all MCM/MIE gasoline engines and Mercury/Mariner 25/30/40/45/50/225 (4-stroke) outboards. Sender, if not already installed on the outboard, must be purchased separately.

Mercury Branded, Box Point of Sale Packaged.

FLAGSHIP OIL PRESSURE GAUGE



79-895289A02

Anti-fog lens. Black face and Black bezel; Blue / White graduations.

Fits D3.0L, D3.6L, and 4.2L diesels (1994 & newer) and D2.8, D4.2L, and D7.3L ES & EI models (1997 & newer).

Mercury Branded, Box Point of Sale Packaged.

FLAGSHIP OIL LEVEL GAUGE KIT



79-895290A01

Anti-fog lens. Black face and Black bezel; Blue/White graduations.

Fits V-6 outboard 3 US gal.(11.34 L) and 1.8 US gal.(6.8 L) remote oil reservoirs.

Mercury Branded, Box Point of Sale Packaged.

FLAGSHIP FUEL GAUGE



79-895291A01

Anti-fog lens. Black face and bezel; blue graduations. 12 volt system and 240 ohm sender required.

Mercury Branded, Box Point of Sale Packaged.

79-895291B01

Anti-fog lens. Black face and bezel; blue graduations. 12 volt system and 240 ohm sender required. Priced and packaged in quantites of 24 pcs

Mercury Branded, Box Point of Sale Packaged.

FLAGSHIP DUAL ENGINE SYNCHRONIZER



79-895294A01

Anti-fog lens. Black face and Black bezel; Blue/White graduations. Connects to tachometers.

Fits both 2-stroke and 4-stroke gasoline engine applications.

Mercury Branded, Box Point of Sale Packaged.

SYNCHRONIZEER DRIVER - GAUGES



8M0053532

This product is used with the analog gauge to synchronize multilpe engines.

Any Admiral,Flagship or International II gauges

FLAGSHIP POWER TRIM GAUGE



79-895292A01

Anti-fog lens. Black face and bezel; blue graduations. Designed for models that have a sender already installed or installation of a sender kit purchased separately.

Fits Sterndrive and Outboards

Mercury Branded, Box Point of Sale Packaged.

FUEL GAUGE SENDING UNIT



851052Q

Designed for tanks that have a 5 screw flange. Use with 12 volt system. 33-240 ohm. Adjusts from 4 in.(10.2 cm) to 24 in.(60.7 cm)

Quicksilver Branded, Clamshell Package Point of Sale Packaged.

FLAGSHIP POWER TRIM GAUGE



79-895292B01

Anti-fog lens. Black face and bezel; blue graduations. Designed for models that have a sender already installed or installation of a sender kit purchased separately. Priced and packaged in quantites of 24 pcs

Fits Sterndrives and Outboards

Mercury Branded, Box Point of Sale Packaged.

FLAGSHIP CRUISELOG GAUGE



79-895295A01

Anti-fog lens. Black face and Black bezel; blue graduations. No illumination. Wiring included with this single pack.

Mercury Branded, Box Point of Sale Packaged.

FLAGSHIP PLUS WHITE FACE FAMILY

Large gauge - fits 3-3/8 in.(86 mm) hole in dash. Small gauge - fits 2-1/8 in.(54 mm) hole in dash. 12 volt system. Tachometer selection and settings charts are located following the color group images.

FLAGSHIP INSTRUMENT SET



79-895283A21

Anti-fog lens. White face and white bezel; black graduations. Set includes 0-6000 RPM tachometer, oil pressure gauge, battery meter and water temperature gauge. All illuminated. Mounting hardware also included.

For various Mercury Outbord and MCM products. Will require an AGI converter for Verado (Ditgital) engines.

Mercury Branded, Box Point of Sale Packaged.

FLAGSHIPTACHOMETER KIT



79-895283A22

Anti-fog lens. 0-5000 RPM. 270 degree dial sweep. White face and White bezel: Black graduations. Outboards require a tachometer harness or ignition/choke assembly for connection. Fits 3-3/8 in. (85 mm) hole in dash.

Diesel Engines only

Mercury Branded, Box Point of Sale Packaged.

FLAGSHIPTACHOMETER KIT



79-895283A23

Anti-fog lens. 0-6000 RPM. 270 degree dial sweep. White face and White bezel: Black graduations. Outboards require a tachometer harness or ignition/choke assembly for connection. Fits 3-3/8 in. (85 mm) hole in dash.

For various Mercury Outboards and MCM produts. Will require the use of AGI converter for Verado (Digital) engines

Mercury Branded, Box Point of Sale Packaged.

FLAGSHIPTACHOMETER KIT



79-895283A25

Anti-fog lens. 0-7000 RPM. 270 degree dial sweep. White face and White bezel: Black graduations. Outboards require a tachometer harness or ignition/choke assembly for connection. Fits 3-3/8 in. (85 mm) hole in dash.

For various Mercury Outboards and MCM product. Will require use of AGI converter for Verado (Digital) engines

Mercury Branded, Box Point of Sale Packaged.

FLAGSHIPTACHOMETER KIT



79-895283A26

Anti-fog lens. 0-8000 RPM. 270 degree dial sweep. White face and White bezel: Black graduations. Outboards require a tachometer harness or ignition/choke assembly for connection. Fits 3-3/8 in. (85 mm) hole in dash.

For various Mercury Outboards and MCM products. Will require the use of an AGI converter with Verado (Digital) engiens.

Mercury Branded, Box Point of Sale Packaged.

FLAGSHIP SPEEDOMETER



79-895285A21

Anti-fog lens. 10-45 MPH. 270 degree dial sweep. White face and White bezel; Black graduations. Includes 20 ft.(6.1 m) of tubing. Fits 3-3/8 in. (85 mm) hole in dash.

Mercury Branded, Box Point of Sale Packaged.

FLAGSHIP SPEEDOMETER



79-895285A23

Anti-fog lens. 10-65 MPH. 270 degree dial sweep. White face and White bezel; Black graduations. Includes 20 ft.(6.1 m) of tubing. Fits 3-3/8 in. (85 mm) hole in dash.

Mercury Branded, Box Point of Sale Packaged.

79-895285B23

Anti-fog lens. 10-65 MPH. 270 degree dial sweep. White face and bezel; black graduations. Includes 20 ft.(6.1 m) of tubing. Fits 3-3/8 in. (85 mm) hole in dash. Pricing and packaging will be in qyuantities of 24 pcs.

Mercury Branded, Box Point of Sale Packaged.

FLAGSHIP SPEEDOMETER



79-895285A24

Anti-fog lens. 0-80 MPH. 270 degree dial sweep. White face and White bezel; Black graduations. Includes 20 ft.(6.1 m) of tubing. Fits 3-3/8 in. (85 mm) hole in dash.

Mercury Branded, Box Point of Sale Packaged.

FLAGSHIP SPEEDOMETER



79-895285A26

Anti-fog lens. 0-100 MPH. 270 degree dial sweep. White face and White bezel; Black graduations. Includes 20 ft.(6.1 m) of tubing. Fits 3-3/8 in. (85 mm) hole in dash.

Mercury Branded, Box Point of Sale Packaged.

FLAGSHIP SPEEDOMETER



79-895285A28

Anti-fog lens. 10-50 Knots. 270 degree dial sweep. White face and White bezel; Black graduations. Includes 20 ft.(6.1 m) of tubing. Fits 3-3/8 in. (85 mm) hole in dash.

Mercury Branded, Box Point of Sale Packaged.

DIGITAL DEPTH GAUGE KIT



79-879292A02

White face and white bezel. Digital depth readout to 199 feet, display is backlit for night operation. Easy addition to any boat. Fits in a cutout for standard 2 in.(51 mm) gauge. Kit includes adjustable alarm, transom-mounted/inside-hull-mounted transducer. Easy to follow instructions. The affordable way to add more fun and safety to boating.

Available in multiple bezel colors

Mercury Branded, Box Point of Sale Packaged.

BEZEL 52 MM



879292001

Bezel-Gold 2 inch (52 MM) Bezel is a twist fit that has a round shape. Used on Depth Sounders only

BEZEL 52 MM



879292002

Bezel-Chrome 2 inch (52 MM) Bezel is a twist fit that has a round shape. Used on Depth Sounders only

FLAGSHIP VOLT METER



79-895286A21

Anti-fog lens. White face and White bezel; black graduations.
Outboards require a tachometer harness or ignition/choke assembly for connection.

Mercury Branded, Box Point of Sale Packaged.

FLAGSHIP WATER TEMPERATURE GAUGE



79-895287A21

Anti-fog lens. 100 deg.-240 deg.F gauge. White face and White bezel; Black graduations.

Fits all MCM/MIE gasoline engines and Mercury/Mariner V-6 outboards. Sender, if not already installed on the outboard, must be purchased separately.

Mercury Branded, Box Point of Sale Packaged.

FLAGSHIP WATER TEMPERATURE GAUGE



79-895287A22

Anti-fog lens. 60 deg.-200 deg.F gauge. White face and White bezel; Black graduations.

Fits Mercury/Mariner 25 thru 115 FourStroke, 225 FourStroke, 40 (3 & 4 cyl.), 45, 50/60 (3 cyl.), and 70 to 125 hp ; and 1993 and newer Force outboards (Force models must order sender FA299791) Senders must be ordered seperately

Mercury Branded, Box Point of Sale Packaged.

FLAGSHIP WATER TEMPERATURE GAUGE



79-895287A23

Anti-fog lens. 100 deg.-240 deg.F gauge. White face and White bezel; Black graduations.

Diesel

Mercury Branded, Box Point of Sale Packaged.

FLAGSHIP WATER PRESSURE GAUGE



79-895288A21

Anti-fog lens. 1 to 15 psi gauge with quick-connect terminals for connection to light. White face and bezel; black graduations. Complete kit. Includes 25 ft.(7.6 m) of tubing and hardware.
Replacement hose not sold separate, obtain locally.

Fits Mercury/Mariner 25 E and EL (U.S. S/N 0C192155 and above; Belgium S/N 9548742 and above), 30 to 125 (except four stroke models), 1998 and older V-6 (3.0L), and Force 40/50.

Mercury Branded, Box Point of Sale Packaged.

79-895288A22

Anti-fog lens. 1 to 15 psi gauge with quick-connect terminals for connection to light. White face and bezel; Black graduations. Replacement gauge only

Fits Mercury/Mariner 25 E and EL (U.S. S/N 0C192155 and above; Belgium S/N 9548742 and above), 30 to 125 (except four stroke models), 1998 and older V-6 (3.0L), and Force 40/50.

Mercury Branded, Box Point of Sale Packaged.

FLAGSHIP WATER PRESSURE GAUGE



79-895288A23

Anti-fog lens. 2 to 30 psi gauge with quick-connect terminals for connection to light. White face and bezel; black graduations. Complete kit. Includes 25 ft.(7.6 m) of tubing and hardware.
Replacement hose not sold separate, obtain locally.

Fits Mercury/Mariner 25/30/40/45/50/75/90/115/225 (4-stroke), all V-6 (except 3.0L 1998 and older) ; and Force 75, 90 and 120. The 75/90/115/225 FourStroke outboards require a reducer fitting p/n 22-86306.

Mercury Branded, Box Point of Sale Packaged.

79-895288A24

Anti-fog lens. 2 to 30 psi gauge with quick-connect terminals for connection to light. White face and White bezel; Black graduations. Replacement gauge only

Fits Mercury/Mariner 25/30/40/45/50/75/90/115/225 (4-stroke), all V-6 (except 3.0L 1998 and older) ; and Force 75, 90 and 120. The 75/90/115/225 FourStroke outboards require a reducer fitting p/n 22-86306.

Mercury Branded, Box Point of Sale Packaged.

FLAGSHIP WATER PRESSURE GAUGE



79-895288A25

Anti-fog lens. 2 to 40 psi gauge with quick-connect terminals for connection to light. White face and bezel; black graduations. Complete kit. Includes 25 ft.(7.6 m) of tubing and hardware.
Replacement hose not sold separate, obtain locally.

Fits 75-115 hp EFI FourStroke Outboards, serial number 1B366823 & above.

Mercury Branded, Box Point of Sale Packaged.

79-895288A26

Anti-fog lens. 2 to 40 psi gauge with quick-connect terminals for connection to light. White face and White bezel; Black graduations. Replacement gauge only

Fits 75-115 hp EFI FourStroke Outboards, serial number 1B366823 & above.

Mercury Branded, Box Point of Sale Packaged.

FLAGSHIP OIL PRESSURE GAUGE



79-895289A21

Anti-fog lens. White face and White bezel; black graduations.

Fits all MCM/MIE gasoline engines and Mercury/Mariner 25/30/40/45/50/225 (4-stroke) outboards. Sender, if not already installed on the outboard, must be purchased separately.

Mercury Branded, Box Point of Sale Packaged.

FLAGSHIP OIL PRESSURE GAUGE



79-895289A22

Anti-fog lens. White face and White bezel; black graduations.

Fits D3.0L, D3.6L, and 4.2L diesels (1994 & newer) and D2.8, D4.2L, and D7.3L ES & EI models (1997 & newer).

Mercury Branded, Box Point of Sale Packaged.

FLAGSHIP OIL LEVEL GAUGE KIT



79-895290A21

Anti-fog lens. White face and White bezel; black graduations.

Fits V-6 outboard 3 US gal.(11.34 L) and 1.8 US gal.(6.8 L) remote oil reservoirs.

Mercury Branded, Box Point of Sale Packaged.

FLAGSHIP FUEL GAUGE



79-895291A21

Anti-fog lens. White face and White bezel; black graduations. 12 volt system and 240 ohm sender required.

Mercury Branded, Box Point of Sale Packaged.

FUEL GAUGE SENDING UNIT



851052Q

Designed for tanks that have a 5 screw flange. Use with 12 volt system. 33-240 ohm. Adjusts from 4 in.(10.2 cm) to 24 in.(60.7 cm)

Quicksilver Branded, Clamshell Package Point of Sale Packaged.

FLAGSHIP POWER TRIM GAUGE



79-895292A21

Anti-fog lens. White face and bezel; black graduations. Designed for models that have a sender already installed or installation of a sender kit purchased separately.

Fits Sterndrives and Outboards

Mercury Branded, Box Point of Sale Packaged.

FLAGSHIP DUAL ENGINE SYNCHRONIZER



79-895294A21

Anti-fog lens. White face and White bezel; black graduations. Connects to tachometers.

Fits both 2-stroke and 4-stroke gasoline engine applications.

Mercury Branded, Box Point of Sale Packaged.

SYNCHRONIZEER DRIVER - GAUGES



8M0053532

This product is used with the analog gauge to synchronize multilpe engines.

Any Admiral,Flagship or International II gauges

FLAGSHIP CRUISELOG GAUGE



79-895295A21

Anti-fog lens. White face and White bezel; black graduations. No illumination. Wiring included with this single pack.

Mercury Branded, Box Point of Sale Packaged.

FLAGSHIP PLUS WHITE FACE WITH CHROME BEZELS

Large gauge - fits 3-3/8 in.(86 mm) hole in dash. Small gauge - fits 2-1/8 in.(54 mm) hole in dash. 12 volt system. Tachometer selection and settings charts are located following the color group images.

FLAGSHIP INSTRUMENT SET



79-895283A41

Anti-fog lens. White face and Chrome bezel; black graduations. Set includes 0-6000 RPM tachometer, oil pressure gauge, battery meter and water temperature gauge. All illuminated. Mounting hardware also included.

For various Mercury Outbord and MCM products. Will require an AGI converter for Verado (Ditgital) engines.

Mercury Branded, Box Point of Sale Packaged.

FLAGSHIP TACHOMETER



79-895283A42

Anti-fog lens. 0-5000 RPM. 270 degree dial sweep. White face and Chrome bezel; black graduations. Fits 3-3/8 in. (85 mm) hole in dash.

Diesel Engines only

Mercury Branded, Box Point of Sale Packaged.

FLAGSHIP TACHOMETER



79-895283A43

Anti-fog lens. 0-6000 RPM. 270 degree dial sweep. White face and Chrome bezel; black graduations. Outboards require a tachometer harness or ignition/choke assembly for connection. Fits 3-3/8 in. (85 mm) hole in dash.

For various Mercury Outboards and MCM products. Will require AGI converter with Verado (Digital) engines..

Mercury Branded, Box Point of Sale Packaged.

FLAGSHIP TACHOMETER



79-895283A45

Anti-fog lens. 0-7000 RPM. 270 degree dial sweep. White face and Chrome bezel: black graduations. Outboards require a tachometer harness or ignition/choke assembly for connection. Fits 3-3/8 in. (85 mm) hole in dash.

For various Mercury Outboards and MCM products. Will require the use of an AGI converter with Verado (Digital) engiens.

Mercury Branded, Box Point of Sale Packaged.

79-895283B43

Anti-fog lens. 0-7000 RPM. 270 degree dial sweep. White face and Chrome bezel: black graduations. Outboards require a tachometer harness or ignition/choke assembly for connection. Fits 3-3/8 in. (85 mm) hole in dash. Priced and packaged in quantities of 24 pcs.

Fits all MCM/MIE gasoline engines; also fits various outboard engines 8hp and higher. See application chart for specific engine models.

Mercury Branded, Box Point of Sale Packaged.

FLAGSHIP TACHOMETER



79-895283A46

Anti-fog lens. 0-8000 RPM. 270 degree dial sweep. White face and Chrome bezel; black graduations. Outboards require a tachometer harness or ignition/choke assembly for connection. Fits 3-3/8 in. (85 mm) hole in dash.

for various Mercury Outboards and MCM products. Will require use of an AGI converter with Verado (Digital) engines.

Mercury Branded, Box Point of Sale Packaged.

FLAGSHIP SPEEDOMETER



79-895285A41

Anti-fog lens. 10-45 MPH. 270 degree dial sweep. White face and Chrome bezel; black graduations. Includes 20 ft.(6.1 m) of tubing. Fits 3-3/8 in. (85 mm) hole in dash.

Mercury Branded, Box Point of Sale Packaged.

FLAGSHIP SPEEDOMETER



79-895285A43

Anti-fog lens. 10-65 MPH. 270 degree dial sweep. White face and Chrome bezel; black graduations. Includes 20 ft.(6.1 m) of tubing. Fits 3-3/8 in. (85 mm) hole in dash.

Mercury Branded, Box Point of Sale Packaged.

79-895285B43

Anti-fog lens. 10-65 MPH. 270 degree dial sweep. White face and Chrome bezel : black graduations. Includes 20 ft.(6.1 m) of tubing. Fits 3-3/8 in. (85 mm) hole in dash. Pricing and packaging will be in qyuantities of 24 pcs.

Mercury Branded, Box Point of Sale Packaged.

FLAGSHIP SPEEDOMETER



79-895285A44

Anti-fog lens. 0-80 MPH. 270 degree dial sweep. White facedial and Chrome bezel; black graduations.
Includes 20 ft.(6.1 m) of tubing. Fits 3-3/8 in. (85 mm) hole in dash.

Mercury Branded, Box Point of Sale Packaged.

FLAGSHIP SPEEDOMETER



79-895285A46

Anti-fog lens. 10-100 MPH. 270 degree dial sweep. White face and Chrome bezel; black graduations. Includes 20 ft.(6.1 m) of tubing. Fits 3-3/8 in. (85 mm) hole in dash.

Mercury Branded, Box Point of Sale Packaged.

FLAGSHIP SPEEDOMETER



79-895285A48

Anti-fog lens. 10-50 Knots. 270 degree dial sweep. White face andChrome bezel; black graduations. Includes 20 ft.(6.1 m) of tubing. Fits 3-3/8 in. (85 mm) hole in dash.

Mercury Branded, Box Point of Sale Packaged.

FLAGSHIP VOLT METER



79-895286A41

Anti-fog lens. White face andChrome bezel; black graduations.
Outboards require a tachometer harness or ignition/choke assembly for connection.

Mercury Branded, Box Point of Sale Packaged.

79-895286B41

Anti-fog lens. White face and Chrome bezel; black graduations. Outboards require a tachometer harness or ignition/choke assembly for connection. Pricing and packaging will be in qyuantities of 24 pcs.

Mercury Branded, Box Point of Sale Packaged.

FLAGSHIP WATER TEMPERATURE GAUGE



79-895287A41

Anti-fog lens. 100 deg.-240 deg.F gauge. White face andChrome bezel; black graduations.

Fits all MCM/MIE gasoline engines and Mercury/Mariner V-6 outboards. Sender, if not already installed on the outboard, must be purchased separately.

Mercury Branded, Box Point of Sale Packaged.

FLAGSHIP WATER TEMPERATURE GAUGE



79-895287A42

Anti-fog lens. 60 deg.-200 deg.F gauge. White face and Chrome bezel; black graduations. Also requires reducer fitting 22-86306 for 75 thru 115 FourStroke and 225 FourStroke applications. Coastal flush units require the 12415A 2 temperature sender kit. Order sender seperately

Fits Mercury/Mariner 25 thru 115 FourStroke, 225 FourStroke, 40 (3 & 4 cyl.), 45, 50/60 (3 cyl.), and 70 to 125 hp ; and 1993 and newer Force outboards (Force models must order sender FA299791)

Mercury Branded, Box Point of Sale Packaged.

FLAGSHIP WATER PRESSURE GAUGE



79-895288A41

Anti-fog lens. 1 to 15 psi gauge with quick-connect terminals for connection to light. White face and Chrome bezel ; black graduations. Complete kit. Includes 25 ft.(7.6 m) of tubing and hardware.
Replacement hose not sold separate, obtain locally.

Fits Mercury/Mariner 25 E and EL (U.S. S/N 0C192155 and above; Belgium S/N 9548742 and above), 30 to 125 (except four stroke models), 1998 and older V-6 (3.0L), and Force 40/50.

Mercury Branded, Box Point of Sale Packaged.

79-895288A42

Anti-fog lens. 1 to 15 psi gauge with quick-connect terminals for connection to light. White face plate with Chrome bezel ; black graduations. Replacement gauge only.

Fits Mercury/Mariner 25 E and EL (U.S. S/N 0C192155 and above; Belgium S/N 9548742 and above), 30 to 125 (except four stroke models), 1998 and older V-6 (3.0L), and Force 40/50.

Mercury Branded, Box Point of Sale Packaged.

FLAGSHIP WATER PRESSURE GAUGE



79-895288A43

Anti-fog lens. 2 to 30 psi gauge with quick-connect terminals for connection to light. White face and Chrome bezel; black graduations. Complete kit. Includes 25 ft.(7.6 m) of tubing and hardware.
Replacement hose not sold separate, obtain locally.

Fits Mercury/Mariner 25/30/40/45/50/75/90/115/225 (4-stroke), all V-6 (except 3.0L 1998 and older) ; and Force 75, 90 and 120. The 75/90/115/225 FourStroke outboards require a reducer fitting p/n 22-86306.

Mercury Branded, Box Point of Sale Packaged.

79-895288A44

Anti-fog lens. 2 to 30 psi gauge with quick-connect terminals for connection to light. White face and Chrome bezel; black graduations. Replacement Gauge

Fits Mercury/Mariner 25/30/40/45/50/75/90/115/225 (4-stroke), all V-6 (except 3.0L 1998 and older) ; and Force 75, 90 and 120. The 75/90/115/225 FourStroke outboards require a reducer fitting p/n 22-86306.

Mercury Branded, Box Point of Sale Packaged.

FLAGSHIP WATER PRESSURE GAUGE



79-895288A45

Anti-fog lens. 2 to 40 psi gauge with quick-connect terminals for connection to light. White face and Chrome bezel; black graduations. Complete kit. Includes 25 ft.(7.6 m) of tubing and hardware.
Replacement hose not sold separate, obtain locally.

Fits 75-115 hp EFI FourStroke Outboards, serial number 1B366823 & above.

Mercury Branded, Box Point of Sale Packaged.

79-895288A46

Anti-fog lens. 2 to 40 psi gauge with quick-connect terminals for connection to light. White face and Chrome bezel; black graduations.. Replacement gauge only.

Fits 75-115 hp EFI FourStroke Outboards, serial number 1B366823 & above.

Mercury Branded, Box Point of Sale Packaged.

FLAGSHIP OIL PRESSURE GAUGE



79-895289A41

Anti-fog lens. White face and Chrome bezel; black graduations.

Fits all MCM/MIE gasoline engines and Mercury/Mariner 25/30/40/45/50/225 (4-stroke) outboards. Sender, if not already installed on the outboard, must be purchased separately.

Mercury Branded, Box Point of Sale Packaged.

FLAGSHIP OIL PRESSURE GAUGE



79-895289A42

Anti-fog lens. White face and Chrome bezel; black graduations.

Fits D3.0L, D3.6L, and 4.2L diesels (1994 & newer) and D2.8, D4.2L, and D7.3L ES & EI models (1997 & newer).

Mercury Branded, Box Point of Sale Packaged.

FLAGSHIP OIL LEVEL GAUGE KIT



79-895290A41

Anti-fog lens. White face and Chrome bezel; black graduations.

Fits V-6 outboard 3 US gal.(11.34 L) and 1.8 US gal.(6.8 L) remote oil reservoirs.

Mercury Branded, Box Point of Sale Packaged.

FLAGSHIP FUEL GAUGE



79-895291A41

Anti-fog lens. White face and Chrome bezel; black graduations. 12 volt system and 240 ohm sender required.

Mercury Branded, Box Point of Sale Packaged.

79-895291B41

Anti-fog lens. White face and Chrome bezel; black graduations. 12 volt system and 240 ohm sender required. Priced and packaged in quantities of 24 pcs

Mercury Branded, Box Point of Sale Packaged.

FLAGSHIP POWER TRIM GAUGE



79-895292A41

Anti-fog lens. White face and Chrome bezel; black graduations. Designed for models that have a sender already installed or installation of a sender kit purchased separately.

Fits Sterndrives and Outboards

Mercury Branded, Box Point of Sale Packaged.

79-895292B41

Anti-fog lens. White face and Chrome bezel; black graduations. Bulk package of 24 pcs. Designed for models that have a sender already installed or installation of a sender kit purchased separately.

Fits Sterndrives and Outboards

Mercury Branded, Box Point of Sale Packaged.

FLAGSHIP DUAL ENGINE SYNCHRONIZER



79-895294A41

Anti-fog lens. White face and Chrome bezel; black graduations. Connects to tachometers.

Fits both 2-stroke and 4-stroke gasoline engine applications.

Mercury Branded, Box Point of Sale Packaged.

SYNCHRONIZEER DRIVER - GAUGES



8M0053532

This product is used with the analog gauge to synchronize multilpe engines.

Any Admiral,Flagship or International II gauges

FLAGSHIP CRUISELOG GAUGE



79-895295A41

Anti-fog lens. White face and Chrome bezel; black graduations. No illumination. Wiring included with this single pack.

Mercury Branded, Box Point of Sale Packaged.

ADMIRAL PLUS BLACK FACE FAMILY

Large gauge - fits 3-3/8 in.(86 mm) hole in dash. Small gauge - fits 2-1/8 in.(54 mm) hole in dash. 12 volt system. Tachometer selection and settings charts are located following the color group images.

ADMIRAL INSTRUMENT SET



79-895283Q01

Anti-fog lens. Black face and black bezel; red graduations. Set includes 0-6000 RPM tachometer, oil pressure gauge, battery meter and water temperature gauge. All illuminated. Mounting hardware also included.

For various Mercury Outboards and MCM products. Will require use of an AGI converter with Verado (Digital) engines.

Quicksilver Branded, Box Point of Sale Packaged.

ADMIRAL TACHOMETER KIT



79-895283Q02

Anti-fog lens. 0-5000 RPM. 270 degree dial sweep. Black face and Black bezel; Red graduations. Outboards require a tachometer harness or ignition/choke assembly for connection. Fits 3-3/8 in. (85 mm) hole in dash.

Diesel Engines only

Mercury Branded, Box Point of Sale Packaged.

ADMIRAL TACHOMETER KIT



79-895283Q03

Anti-fog lens. 0-6000 RPM. 270 degree dial sweep. Black face and Black bezel; Red graduations. Outboards require a tachometer harness or ignition/choke assembly for connection. Fits 3-3/8 in. (85 mm) hole in dash.

For various Mercury Outboards and MCM products. Will require use of an AGI converter with Verado (Digital) engines.

Quicksilver Branded, Box Point of Sale Packaged.

ADMIRAL TACHOMETER KIT



79-895283Q05

Anti-fog lens. 0-7000 RPM. 270 degree dial sweep. Black face and Black bezel; Red graduations. Outboards require a tachometer harness or ignition/choke assembly for connection. Fits 3-3/8 in. (85 mm) hole in dash.

For various Mercury Outboards and MCM products. Will require use of an AGI converter with Verado (Digital) engines.

Quicksilver Branded, Box Point of Sale Packaged.

ADMIRAL TACHOMETER

79-895283B13

Anti-fog lens. 0-7000 RPM. 270 degree dial sweep. Black face and Black bezel; Red graduations. Outboards require a tachometer harness or ignition/choke assembly for connection. Fits 3-3/8 in. (85 mm) hole in dash. Priced and packaged in quantities of 24 pcs.

For various Mercury Outboards and MCM products. Will require use of an AGI converter with Verado (Digital) engines

Mercury Branded, Box Point of Sale Packaged.

ADMIRAL TACHOMETER KIT



79-895283Q06

Anti-fog lens. 0-8000 RPM. 270 degree dial sweep. Black face and Black bezel; Red graduations. Outboards require a tachometer harness or ignition/choke assembly for connection. Fits 3-3/8 in. (85 mm) hole in dash.

For various Mercury Outboards and MCM products. Will require an AGI converter with Veradp (Digital) engines.

Quicksilver Branded, Box Point of Sale Packaged.

ADMIRAL SPEEDOMETER



79-895285Q01

Anti-fog lens. 10-45 MPH. 270 degree dial sweep. Black face and Black bezel; White/Red graduations. Includes 20 ft.(6.1 m) of tubing. Fits 3-3/8 in. (85 mm) hole in dash.

Quicksilver Branded, Box Point of Sale Packaged.

ADMIRAL SPEEDOMETER



79-895285Q03

Anti-fog lens. 10-65 MPH. 270 degree dial sweep. Black face and Black bezel; White/Red graduations. Includes 20 ft.(6.1 m) of tubing. Fits 3-3/8 in. (85 mm) hole in dash.

Quicksilver Branded, Box Point of Sale Packaged.

ADMIRAL SPEEDOMETER



79-895285Q04

Anti-fog lens. 0-80 MPH. 270 degree dial sweep. Black face and Black bezel; White/Red graduations. Includes 20 ft.(6.1 m) of tubing. Fits 3-3/8 in. (85 mm) hole in dash.

Quicksilver Branded, Box Point of Sale Packaged.

ADMIRAL SPEEDOMETER



79-895285Q08

Anti-fog lens. 10-40 Knots. 270 degree dial sweep. Black face and Black bezel; White/Red graduations. Includes 20 ft.(6.1 m) of tubing. Fits 3-3/8 in. (85 mm) hole in dash.

Quicksilver Branded, Box Point of Sale Packaged.

DIGITAL DEPTH GAUGE KIT



79-879292A01

Black face and black bezel. Digital depth readout to 199 feet, display is backlit for night operation. Easy addition to any boat. Fits in a cutout for standard 2 in.(51 mm) gauge. Kit includes adjustable alarm, transom-mounted/inside-hull-mounted transducer. Easy to follow instructions. The affordable way to add more fun and safety to boating.

Available in Multiple bezel colors

Mercury Branded, Box Point of Sale Packaged.

BEZEL 52 MM



879292001

Bezel-Gold 2 inch (52 MM) Bezel is a twist fit that has a round shape. Used on Depth Sounders only

BEZEL 52 MM



879292002

Bezel-Chrome 2 inch (52 MM) Bezel is a twist fit that has a round shape. Used on Depth Sounders only

ADMIRAL VOLT METER



79-895286Q01

Anti-fog lens. Black face and Black bezel; Red/White graduations.
Outboards require a tachometer harness or ignition/choke assembly for connection.

Quicksilver Branded, Box Point of Sale Packaged.

WATER TEMPERATURE GAUGE



79-895287Q01

Anti-fog lens. 100 deg.-240 deg.F gauge. Black face and Black bezel; white/red graduations. Order sender seperately.. Also requires reducer fitting 22-86306 for 75 thru 115 FourStroke and 225 FourStroke applications. Coastal flush units require the 12415A 2 temperature sender kit.

Fits Mercury/Mariner 25 thru 115 FourStroke, 225 FourStroke, 40 (3 & 4 cyl.), 45, 50/60 (3 cyl.), and 70 to 125 hp ; and 1993 and newer Force outboards (Force models must order sender FA299791)

Quicksilver Branded, Box Point of Sale Packaged.

WATER TEMPERATURE GAUGE



79-895287Q02

Anti-fog lens. 100 deg.-220 deg.F gauge. Black face and Black bezel; white/red graduations. Sender must be ordered seperately. Also requires reducer fitting 22-86306 for 75 thru 115 FourStroke and 225 FourStroke applications. Coastal flush units require the 12415A 2 temperature sender kit.

Fits Mercury/Mariner 25 thru 115 FourStroke, 225 FourStroke, 40 (3 & 4 cyl.), 45, 50/60 (3 cyl.), and 70 to 125 hp ; and 1993 and newer Force outboards (Force models must order sender FA299791 and discard sender included with gauge.

Quicksilver Branded, Box Point of Sale Packaged.

ADMIRAL WATER PRESSURE GAUGE



79-895288Q01

Anti-fog lens. 1 to 15 psi gauge with quick-connect terminals for connection to light. Black face and Black bezel; red graduations. Complete kit. Includes 25 ft.(7.6 m) of tubing and hardware.
Replacement hose not sold separate, obtain locally.

Fits Mercury/Mariner 25/30/40/45/50/75/90/115/225 (4-stroke), all V-6 (except 3.0L 1998 and older) ; and Force 75, 90 and 120. The 75/90/115/225 FourStroke outboards require a reducer fitting p/n 22-86306.

Quicksilver Branded, Box Point of Sale Packaged.

79-895288Q02

Anti-fog lens. 1 to 15 psi gauge with quick-connect terminals for connection to light. Black face and Black bezel; red graduations. Replacement gauge only.

Fits Mercury/Mariner 25 E and EL (U.S. S/N 0C192155 and above; Belgium S/N 9548742 and above), 30 to 125 (except four stroke models), 1998 and older V-6 (3.0L), and Force 40/50.

Quicksilver Branded, Box Point of Sale Packaged.

ADMIRAL WATER PRESSURE GAUGE



79-895288Q03

Anti-fog lens. 2 to 30 psi gauge with quick-connect terminals for connection to light. Black face and Black bezel; red graduations. Complete kit. Includes 25 ft.(7.6 m) of tubing and hardware.
Replacement hose not sold separate, obtain locally.

Fits Mercury/Mariner 25/30/40/45/50/75/90/115/225 (4-stroke), all V-6 (except 3.0L 1998 and older) ; and Force 75, 90 and 120. The 75/90/115/225 FourStroke outboards require a reducer fitting p/n 22-86306.

Quicksilver Branded, Box Point of Sale Packaged.

79-895288Q04

Anti-fog lens. 2 to 30 psi gauge with quick-connect terminals for connection to light. Black face and Black bezel; red graduations. Replacement gauge only.

Fits Mercury/Mariner 25/30/40/45/50/75/90/115/225 (4-stroke), all V-6 (except 3.0L 1998 and older) ; and Force 75, 90 and 120. The 75/90/115/225 FourStroke outboards require a reducer fitting p/n 22-86306.

Quicksilver Branded, Box Point of Sale Packaged.

ADMIRAL WATER PRESSURE GAUGE



79-895288Q05

Anti-fog lens. 2 to 40 psi gauge with quick-connect terminals for connection to light. Black face and Black bezel; red graduations. Complete kit. Includes 25 ft.(7.6 m) of tubing and hardware.
Replacement hose not sold separate, obtain locally.

Fits 75-115 hp EFI FourStroke Outboards, serial number 1B366823 & above.

Quicksilver Branded, Box Point of Sale Packaged.

79-895288Q06

Anti-fog lens. 2 to 40 psi gauge with quick-connect terminals for connection to light. Black face and Black bezel; red graduations. Replacement gauge only.

Fits 75-115 hp EFI FourStroke Outboards, serial number 1B366823 & above.

Quicksilver Branded, Box Point of Sale Packaged.

ADMIRAL OIL PRESSURE GAUGE



79-895289Q01

Anti-fog lens. Black face and Black bezel; Red/white graduations.

Fits all MCM/MIE gasoline engines and Mercury/Mariner 25/30/40/45/50/225 (4-stroke) outboards. Sender, if not already installed on the outboard, must be purchased separately.

Quicksilver Branded, Box Point of Sale Packaged.

OIL PRESSURE SENDER KIT



8M0068785

Includes sender and harness used with oil pressure gauges and 21 ft.(6.4 m) of wire.

Fits Mercury/Mariner 25/30/40/45/50/60 (4-stroke).

ADMIRAL OIL LEVEL GAUGE KIT



79-895290Q01

Anti-fog lens. Black face and Black bezel; Red/White graduations.

Fits V-6 outboard 3 US gal.(11.34 L) and 1.8 US gal.(6.8 L) remote oil reservoirs.

Quicksilver Branded, Box Point of Sale Packaged.

ADMIRAL FUEL GAUGE



79-895291Q01

Anti-fog lens. Black face and Black bezel; Red/White graduations. 12 volt system and 240 ohm sender required.

Quicksilver Branded, Box Point of Sale Packaged.

79-895291B11

Anti-fog lens. Black face and Black bezel; red graduations. 12 volt system and 240 ohm sender required.
Priced and packaged in quantites of 24 pcs

Quicksilver Branded, Box Point of Sale Packaged.

ADMIRAL POWER TRIM GAUGE



79-895292Q01

Admiral Plus series gauge. Anti-fog lens. Black face and bezel; red graduations. Designed for models that have a sender already installed or installation of a sender kit purchased separately.

Fits MCM and Outboards

Quicksilver Branded, Box Point of Sale Packaged.

ADMIRAL TRIM GAUGE

79-895292B11

Anti-fog lens. Black face and Black bezel; red graduations. 12 volt system. Priced and packaged in quantites of 24 pcs

Quicksilver Branded, Box Point of Sale Packaged.

ADMIRAL DUAL ENGINE SYNCHRONIZER



79-895294Q01

Anti-fog lens. Black face and Black bezel; red graduations. Connects to tachometers.

Fits both 2-stroke and 4-stroke gasoline engine applications.

Quicksilver Branded, Box Point of Sale Packaged.

SYNCHRONIZEER DRIVER - GAUGES



8M0053532

This product is used with the analog gauge to synchronize multilpe engines.

Any Admiral,Flagship or International II gauges

ADMIRAL CRUISELOG GAUGE



79-895295Q01

Anti-fog lens. Black face and Black bezel; Red/White graduations. No illumination. Wiring included with this single pack.

Quicksilver Branded, Box Point of Sale Packaged.

ADMIRAL PLUS BLACK WITH CHROME BEZEL

Large gauge - fits 3-3/8 in.(86 mm) hole in dash. Small gauge - fits 2-1/8 in.(54 mm) hole in dash. 12 volt system. Tachometer selection and setting charts are located following the color group images.

ADMIRAL INSTRUMENT SET



79-895283Q61

Anti-fog lens. Black face and Chrome bezel; red graduations. Set includes 0-6000 RPM tachometer, oil pressure gauge, battery meter and water temperature gauge. All illuminated. Mounting hardware also included.

For various Mercury Outboards and MCM products. Will require an AGI converter with Verado (Digital) engines.

Quicksilver Branded, Box Point of Sale Packaged.

ADMIRAL TACHOMETER



79-895283Q62

Anti-fog lens. 0-5000 RPM. 270 degree dial sweep. Black face and Chrome bezel; red graduations. Fits 3-3/8 in. (85 mm) hole in dash.

Diesel Engines only

Quicksilver Branded, Box Point of Sale Packaged.

ADMIRAL TACHOMETER



79-895283Q63

Anti-fog lens. 0-6000 RPM. 270 degree dial sweep. Black face and Chrome bezel; red graduations. Outboards require a tachometer harness or ignition/choke assembly for connection. Fits 3-3/8 in. (85 mm) hole in dash.

For various Mercury Outboards and MCM products. Will require an AGI converter for Verado (Digital) engines.L

Quicksilver Branded, Box Point of Sale Packaged.

79-895283B63

Anti-fog lens. 0-6000 RPM. 270 degree dial sweep. Black face and Chrome bezel; red graduations. Outboards require a tachometer harness or ignition/choke assembly for connection. Fits 3-3/8 in. (85 mm) hole in dash. Priced and packaged in quantities of 24 pcs.

Fits all MCM/MIE gasoline engines and D1.7L DTI & D2.8L/D4.2L D-Tronic diesel engines; also fits various outboard engines 8hp and higher. See application chart for specific engine models.

Quicksilver Branded, Box Point of Sale Packaged.

ADMIRAL TACHOMETER



79-895283Q65

Anti-fog lens. 0-7000 RPM. 270 degree dial sweep. Black face and Chrome bezel: red graduations. Outboards require a tachometer harness or ignition/choke assembly for connection. Fits 3-3/8 in. (85 mm) hole in dash.

For various Mercury Outboards and MCM products. Will require an AGI converter for Verado (Digital) engines.L

Quicksilver Branded, Box Point of Sale Packaged.

79-895283B65

Anti-fog lens. 0-7000 RPM. 270 degree dial sweep. Black face and Chrome bezel: red graduations. Outboards require a tachometer harness or ignition/choke assembly for connection. Fits 3-3/8 in. (85 mm) hole in dash. Priced and packaged in quantities of 24 pcs.

Fits all MCM/MIE gasoline engines; also fits various outboard engines 8hp and higher. See application chart for specific engine models.

Quicksilver Branded, Box Point of Sale Packaged.

ADMIRAL TACHOMETER



79-895283Q66

Anti-fog lens. 0-8000 RPM. 270 degree dial sweep. Black face and Chrome bezel; red graduations. Outboards require a tachometer harness or ignition/choke assembly for connection. Fits 3-3/8 in. (85 mm) hole in dash.

For various Mercury Outboards and MCM products. Will require an AGI converter for Verado (Digital) engines.L

Quicksilver Branded, Box Point of Sale Packaged.

79-895283B66

Anti-fog lens. 0-8000 RPM. 270 degree dial sweep. Black face and Chrome bezel; red graduations. Outboards require a tachometer harness or ignition/choke assembly for connection. Fits 3-3/8 in. (85 mm) hole in dash. Priced and packaged in quantities of 24 pcs.

Fits all MCM/MIE gasoline engines; also fits various outboard engines 8hp and higher. See application chart for specific engine models.

Quicksilver Branded, Box Point of Sale Packaged.

ADMIRAL SPEEDOMETER



79-895285Q61

Anti-fog lens. 10-45 MPH. 270 degree dial sweep. Black face and Chrome bezel; red graduations. Includes 20 ft.(6.1 m) of tubing. Fits 3-3/8 in. (85 mm) hole in dash.

Quicksilver Branded, Box Point of Sale Packaged.

79-895285B61

Anti-fog lens. 10-45 MPH. 270 degree dial sweep. Black face and Chrome bezel; red graduations. Includes 20 ft.(6.1 m) of tubing. Fits 3-3/8 in. (85 mm) hole in dash. Pricing and packaging will be in qyuantities of 24 pcs.

Quicksilver Branded, Box Point of Sale Packaged.

ADMIRAL SPEEDOMETER



79-895285Q63

Anti-fog lens. 10-65 MPH. 270 degree dial sweep. Black face and Chrome bezel; red graduations. Includes 20 ft.(6.1 m) of tubing. Fits 3-3/8 in. (85 mm) hole in dash.

Quicksilver Branded, Box Point of Sale Packaged.

79-895285B63

Anti-fog lens. 10-65 MPH. 270 degree dial sweep. Black face and Chrome bezel; red graduations. Includes 20 ft.(6.1 m) of tubing. Fits 3-3/8 in. (85 mm) hole in dash. Pricing and packaging will be in qyuantities of 24 pcs.

Quicksilver Branded, Box Point of Sale Packaged.

ADMIRAL SPEEDOMETER



79-895285Q64

Anti-fog lens. 10-80 MPH. 270 degree dial sweep. Black face and Chrome bezel; red graduations. Includes 20 ft.(6.1 m) of tubing. Fits 3-3/8 in. (85 mm) hole in dash.

Quicksilver Branded, Box Point of Sale Packaged.

ADMIRAL SPEEDOMETER



79-895285Q68

Anti-fog lens. 10-40 Knots. 270 degree dial sweep. Black face and Chrome bezel; red graduations. Includes 20 ft.(6.1 m) of tubing. Fits 3-3/8 in. (85 mm) hole in dash.

Quicksilver Branded, Box Point of Sale Packaged.

ADMIRAL VOLT METER



79-895286Q61

Anti-fog lens. Black face and Chrome bezel; red/white graduations. Outboards require a tachometer harness or ignition/choke assembly for connection.

Quicksilver Branded, Box Point of Sale Packaged.

ADMIRAL WATER TEMPERATURE GAUGE



79-895287Q61

Anti-fog lens. 100 deg.-240 deg.F gauge. Black face and Chrome bezel; red graduations.

Fits all MCM/MIE gasoline engines and Mercury/Mariner V-6 outboards. Sender, if not already installed on the outboard, must be purchased separately.

Quicksilver Branded, Box Point of Sale Packaged.

ADMIRAL WATER TEMPERATURE GAUGE



79-895287Q62

Anti-fog lens. 60 deg.-220 deg.F gauge. Black face and Chrome bezel; red/white graduations.

Fits Mercury/Mariner 25 thru 115 FourStroke, 225 FourStroke, 40 (3 & 4 cyl.), 45, 50/60 (3 cyl.), and 70 to 125 hp ; and 1993 and newer Force outboards (Force models must order sender FA299791) Senders must be ordered seperately

Quicksilver Branded, Box Point of Sale Packaged.

ADMIRAL WATER PRESSURE GAUGE



79-895288Q61

Anti-fog lens. 1 to 15 psi gauge with quick-connect terminals for connection to light. Black face and Chrome bezel; red graduations. Complete kit. Includes 25 ft.(7.6 m) of tubing and hardware.
Replacement hose not sold separate, obtain locally.

Fits Mercury/Mariner 25/30/40/45/50/75/90/115/225 (4-stroke), all V-6 (except 3.0L 1998 and older) ; and Force 75, 90 and 120. The 75/90/115/225 FourStroke outboards require a reducer fitting p/n 22-86306.

Quicksilver Branded, Box Point of Sale Packaged.

79-895288Q62

Anti-fog lens. 1 to 15 psi gauge with quick-connect terminals for connection to light. Black face and Chrome bezel; red graduations. Replacement gauge only.

Fits Mercury/Mariner 25 E and EL (U.S. S/N 0C192155 and above; Belgium S/N 9548742 and above), 30 to 125 (except four stroke models), 1998 and older V-6 (3.0L), and Force 40/50.

Quicksilver Branded, Box Point of Sale Packaged.

ADMIRAL WATER PRESSURE GAUGE



79-895288Q63

Anti-fog lens. 2 to 30 psi gauge with quick-connect terminals for connection to light. Black face and Chrome bezel; red graduations. Complete kit. Includes 25 ft.(7.6 m) of tubing and hardware.
Replacement hose not sold separate, obtain locally.

Fits Mercury/Mariner 25/30/40/45/50/75/90/115/225 (4-stroke), all V-6 (except 3.0L 1998 and older) ; and Force 75, 90 and 120. The 75/90/115/225 FourStroke outboards require a reducer fitting p/n 22-86306.

Quicksilver Branded, Box Point of Sale Packaged.

79-895288Q64

Anti-fog lens. 2 to 30 psi gauge with quick-connect terminals for connection to light. Black face and Chrome bezel; red graduations. Replacement gauge only.

Fits Mercury/Mariner 25/30/40/45/50/75/90/115/225 (4-stroke), all V-6 (except 3.0L 1998 and older) ; and Force 75, 90 and 120. The 75/90/115/225 FourStroke outboards require a reducer fitting p/n 22-86306.

Quicksilver Branded, Box Point of Sale Packaged.

ADMIRAL WATER PRESSURE GAUGE



79-895288Q65

Anti-fog lens. 2 to 40 psi gauge with quick-connect terminals for connection to light. Black face and Chrome bezel; red graduations. Complete kit. Includes 25 ft.(7.6 m) of tubing and hardware.
Replacement hose not sold separate, obtain locally.

Fits 75-115 hp EFI FourStroke Outboards, serial number 1B366823 & above.

Quicksilver Branded, Box Point of Sale Packaged.

79-895288Q66

Anti-fog lens. 2 to 40 psi gauge with quick-connect terminals for connection to light. Black face and Chrome bezel; red graduations. Replacement gauge only.

Fits 75-115 hp EFI FourStroke Outboards, serial number 1B366823 & above.

Quicksilver Branded, Box Point of Sale Packaged.

ADMIRAL OIL PRESSURE GAUGE



79-895289Q61

Anti-fog lens. Black face and Chrome bezel; red graduations.

Fits all MCM/MIE gasoline engines and Mercury/Mariner 25/30/40/45/50/225 (4-stroke) outboards. Sender, if not already installed on the outboard, must be purchased separately.

Quicksilver Branded, Box Point of Sale Packaged.

OIL PRESSURE SENDER KIT



8M0068785

Includes sender and harness used with oil pressure gauges and 21 ft.(6.4 m) of wire.

Fits Mercury/Mariner 25/30/40/45/50/60 (4-stroke).

ADMIRAL OIL LEVEL GAUGE KIT



79-895290Q61

Anti-fog lens. Black face and Chrome bezel; Red/White graduations.

Fits V-6 outboard 3 US gal.(11.34 L) and 1.8 US gal.(6.8 L) remote oil reservoirs.

Quicksilver Branded, Box Point of Sale Packaged.

ADMIRAL FUEL GAUGE



79-895291Q61

Anti-fog lens. Black face and Chrome bezel; red graduations. 12 volt system and 240 ohm sender required.

Quicksilver Branded, Box Point of Sale Packaged.

ADMIRAL TRIM GAUGE



79-895292Q61

Anti-fog lens. Black face and Chrome bezel; red graduations. 12 volt system

Quicksilver Branded, Box Point of Sale Packaged.

79-895292B61

Anti-fog lens. Black face and Chrome bezel; red graduations. Bulk package of 24 pcs. 12 volt system

Quicksilver Branded, Box Point of Sale Packaged.

ADMIRAL DUAL ENGINE SYNCHRONIZER



79-895294Q61

Anti-fog lens. Black face and Chrome bezel; red graduations. Connects to tachometers.

Fits both 2-stroke and 4-stroke gasoline engine applications.

Quicksilver Branded, Box Point of Sale Packaged.

SYNCHRONIZEER DRIVER - GAUGES



8M0053532

This product is used with the analog gauge to synchronize multilpe engines.

Any Admiral,Flagship or International II gauges

ADMIRAL CRUISELOG GAUGE



79-895295Q61

Anti-fog lens. Black face and Chrome bezel; red graduations. No illumination. Wiring included with this single pack.

Quicksilver Branded, Box Point of Sale Packaged.

ADMIRAL PLUS WHITE FACE FAMILY

Large gauge - fits 3-3/8 in.(86 mm) hole in dash. Small gauge - fits 2-1/8 in.(54 mm) hole in dash. 12 volt system. Tachometer selection and settings charts are located following the color group images.

ADMIRAL INSTRUMENT SET



79-895283Q21

Anti-fog lens. White face and black bezel; black graduations. Set includes 0-6000 RPM tachometer, oil pressure gauge, battery meter and water temperature gauge. All illuminated. Mounting hardware also included.

For various Mercury Outboards and MCM engines. Will require an AGI converter with Verado (Digital) engines.

Quicksilver Branded, Box Point of Sale Packaged.

ADMIRAL TACHOMETER



79-895283Q22

Anti-fog lens. 0-5000 RPM. 270 degree dial sweep. White face and Black bezel; Black graduations. Outboards require a tachometer harness or ignition/choke assembly for connection. Fits 3-3/8 in. (85 mm) hole in dash.

Diesel Engines only

Quicksilver Branded, Box Point of Sale Packaged.

ADMIRAL TACHOMETER



79-895283Q23

Anti-fog lens. 0-6000 RPM. 270 degree dial sweep. White face and Black bezel; Black graduations. Outboards require a tachometer harness or ignition/choke assembly for connection. Fits 3-3/8 in. (85 mm) hole in dash.

For various Mercury Outboards and MCM engines. Will require an AGI converter with Verado (Digital) engines.

Quicksilver Branded, Box Point of Sale Packaged.

ADMIRAL TACHOMETER



79-895283Q25

Anti-fog lens. White face and black bezel; black graduations. Set includes 0-7000 RPM tachometer, oil pressure gauge, battery meter and water temperature gauge. All illuminated. Mounting hardware also included.

For various Mercury Outboards and MCM engines. Will require an AGI converter with Verado (Digital) engines.

Quicksilver Branded, Box Point of Sale Packaged.

ADMIRAL TACHOMETER



79-895283Q26

Anti-fog lens. 0-8000 RPM. 270 degree dial sweep. White face and Black bezel; Black graduations. Outboards require a tachometer harness or ignition/choke assembly for connection. Fits 3-3/8 in. (85 mm) hole in dash.

For various Mercury Outboards and MCM engines. Will require an AGI converter with Verado (Digital) engines.

Quicksilver Branded, Box Point of Sale Packaged.

ADMIRAL SPEEDOMETER



79-895285Q21

Anti-fog lens. 10-45 MPH. 270 degree dial sweep. White face and Black bezel; Black graduations. Includes 20 ft.(6.1 m) of tubing. Fits 3-3/8 in. (85 mm) hole in dash.

Quicksilver Branded, Box Point of Sale Packaged.

ADMIRAL SPEEDOMETER



79-895285Q23

Anti-fog lens. 10-65 MPH. 270 degree dial sweep. White face and Black bezel; Black graduations. Includes 20 ft.(6.1 m) of tubing. Fits 3-3/8 in. (85 mm) hole in dash.

Quicksilver Branded, Box Point of Sale Packaged.

ADMIRAL SPEEDOMETER



79-895285Q24

Anti-fog lens. 0-80 MPH. 270 degree dial sweep. White face and Black bezel; Black graduations. Includes 20 ft.(6.1 m) of tubing. Fits 3-3/8 in. (85 mm) hole in dash.

Quicksilver Branded, Box Point of Sale Packaged.

ADMIRAL SPEEDOMETER



79-895285Q28

Anti-fog lens. 10-40 Knots. 270 degree dial sweep. White face and Black bezel; Blackgraduations. Includes 20 ft.(6.1 m) of tubing. Fits 3-3/8 in. (85 mm) hole in dash.

Quicksilver Branded, Box Point of Sale Packaged.

DIGITAL DEPTH GAUGE KIT



79-879292A02

White face and white bezel. Digital depth readout to 199 feet, display is backlit for night operation. Easy addition to any boat. Fits in a cutout for standard 2 in.(51 mm) gauge. Kit includes adjustable alarm, transom-mounted/inside-hull-mounted transducer. Easy to follow instructions. The affordable way to add more fun and safety to boating.

Available in multiple bezel colors

Mercury Branded, Box Point of Sale Packaged.

BEZEL 52 MM



879292001

Bezel-Gold 2 inch (52 MM) Bezel is a twist fit that has a round shape. Used on Depth Sounders only

BEZEL 52 MM



879292002

Bezel-Chrome 2 inch (52 MM) Bezel is a twist fit that has a round shape. Used on Depth Sounders only

ADMIRAL VOLT METER



79-895286Q21

Anti-fog lens. White face and Black bezel; black graduations.
Outboards require a tachometer harness or ignition/choke assembly for connection.

Quicksilver Branded, Box Point of Sale Packaged.

WATER TEMPERATURE GAUGE



79-895287Q21

Anti-fog lens. 100 deg.-240 deg.F gauge. White face and Black bezel; Black graduations. Includes sender. Also requires reducer fitting 22-86306 for 75 thru 115 FourStroke and 225 FourStroke applications. Coastal flush units require the 12415A 2 temperature sender kit.

Fits Mercury/Mariner 25 thru 115 FourStroke, 225 FourStroke, 40 (3 & 4 cyl.), 45, 50/60 (3 cyl.), and 70 to 125 hp ; and 1993 and newer Force outboards (Force models must order sender FA299791 and discard sender included with gauge.

Quicksilver Branded, Box Point of Sale Packaged.

ADMITAL WATER TEMPERATURE GAUGE



79-895287Q22

Anti-fog lens. 60 deg.-200 deg.F gauge. White face and Black bezel; Black graduations. Sender must be ordered seperately. Also requires reducer fitting 22-86306 for 75 thru 115 FourStroke and 225 FourStroke applications. Coastal flush units require the 12415A 2 temperature sender kit.

Fits Mercury/Mariner 25 thru 115 FourStroke, 225 FourStroke, 40 (3 & 4 cyl.), 45, 50/60 (3 cyl.), and 70 to 125 hp ; and 1993 and newer Force outboards (Force models must order sender FA299791)

Quicksilver Branded, Box Point of Sale Packaged.

ADMIRAL WATER PRESSURE GAUGE



79-895288Q21

Anti-fog lens. 1 to 15 psi gauge with quick-connect terminals for connection to light. White face and Black bezel; Black graduations. Complete kit. Includes 25 ft.(7.6 m) of tubing and hardware.
Replacement hose not sold separate, obtain locally.

Fits Mercury/Mariner 25 E and EL (U.S. S/N 0C192155 and above; Belgium S/N 9548742 and above), 30 to 125 (except four stroke models), 1998 and older V-6 (3.0L), and Force 40/50.

Quicksilver Branded, Box Point of Sale Packaged.

79-895288Q22

Anti-fog lens. 1 to 15 psi gauge with quick-connect terminals for connection to light. White face and Black bezel; Black graduations. Replacement gauge only.

Fits Mercury/Mariner 25 E and EL (U.S. S/N 0C192155 and above; Belgium S/N 9548742 and above), 30 to 125 (except four stroke models), 1998 and older V-6 (3.0L), and Force 40/50.

Quicksilver Branded, Box Point of Sale Packaged.

ADMIRAL WATER PRESSURE GAUGE



79-895288Q23

Anti-fog lens. 2 to 30 psi gauge with quick-connect terminals for connection to light. White face and Black bezel; Black graduations. Complete kit. Includes 25 ft.(7.6 m) of tubing and hardware.
Replacement hose not sold separate, obtain locally.

Fits Mercury/Mariner 25/30/40/45/50/75/90/115/225 (4-stroke), all V-6 (except 3.0L 1998 and older) ; and Force 75, 90 and 120. The 75/90/115/225 FourStroke outboards require a reducer fitting p/n 22-86306.

Quicksilver Branded, Box Point of Sale Packaged.

79-895288Q24

Anti-fog lens. 2 to 30 psi gauge with quick-connect terminals for connection to light. White face and Black bezel; Black graduations. Replacement gauge only.

Fits Mercury/Mariner 25/30/40/45/50/75/90/115/225 (4-stroke), all V-6 (except 3.0L 1998 and older) ; and Force 75, 90 and 120. The 75/90/115/225 FourStroke outboards require a reducer fitting p/n 22-86306.

Quicksilver Branded, Box Point of Sale Packaged.

ADMIRAL WATER PRESSURE GAUGE



79-895288Q25

Anti-fog lens. 2 to 40 psi gauge with quick-connect terminals for connection to light. White face and Black bezel; Black graduations. Complete kit. Includes 25 ft.(7.6 m) of tubing and hardware.
Replacement hose not sold separate, obtain locally.

Fits 75-115 hp EFI FourStroke Outboards, serial number 1B366823 & above.

Quicksilver Branded, Box Point of Sale Packaged.

79-895288Q26

Anti-fog lens. 2 to 40 psi gauge with quick-connect terminals for connection to light. White face and Black bezel; Black graduations. Replacement gauge only.

Fits 75-115 hp EFI FourStroke Outboards, serial number 1B366823 & above.

Quicksilver Branded, Box Point of Sale Packaged.

ADMIRAL OIL PRESSURE GAUGE



79-895289Q21

Anti-fog lens. White face and Black bezel; black graduations.

Fits all MCM/MIE gasoline engines and Mercury/Mariner 25/30/40/45/50/225 (4-stroke) outboards. Sender, if not already installed on the outboard, must be purchased separately.

Quicksilver Branded, Box Point of Sale Packaged.

OIL PRESSURE SENDER KIT



8M0068785

Includes sender and harness used with oil pressure gauges and 21 ft.(6.4 m) of wire.

Fits Mercury/Mariner 25/30/40/45/50/60 (4-stroke).

ADMIRAL FUEL GAUGE



79-895291Q21

Anti-fog lens. White face and Black bezel; black graduations. 12 volt system and 240 ohm sender required.

Quicksilver Branded, Box Point of Sale Packaged.

79-895291B31

Anti-fog lens. White face and Black bezel; black graduations. 12 volt system and 240 ohm sender required. Bulk package of 24 pcs.

Quicksilver Branded, Box Point of Sale Packaged.

ADMIRAL POWER TRIM GAUGE



79-895292Q21

Anti-fog lens. White face and black bezel; black graduations. Designed for models that have a sender already installed or installation of a sender kit purchased separately.

Fits MCM and Outboards

Quicksilver Branded, Box Point of Sale Packaged.

79-895292B31

Anti-fog lens. White face and black bezel; black graduations. Designed for models that have a sender already installed or installation of a sender kit purchased separately. Bulk package of 24 pcs.

Fits MCM and Outboards

Quicksilver Branded, Box Point of Sale Packaged.

ADMIRAL DUAL ENGINE SYNCHRONIZER



79-895294Q21

Anti-fog lens. White face and Black bezel; black graduations. Connects to tachometers.

Fits both 2-stroke and 4-stroke gasoline engine applications.

Quicksilver Branded, Box Point of Sale Packaged.

SYNCHRONIZEER DRIVER - GAUGES



8M0053532

This product is used with the analog gauge to synchronize multilpe engines.

Any Admiral,Flagship or International II gauges

ADMIRAL CRUISELOG GAUGE



79-895295Q21

Anti-fog lens. White face and Black bezel; black graduations. No illumination. Wiring included with this single pack.

Quicksilver Branded, Box Point of Sale Packaged.

INTERNATIONAL II FAMILY GAUGES

Large gauge - fits 3-3/8 in.(86 mm) hole in dash. Small gauge - fits 2-1/8 in.(54 mm) hole in dash. 12 volt system. Tachometer selection and settings charts are located following the color group images.

INTENATIONAL II INSTRUMENT SET



79-895283Q41

Anti-fog lens. Black face and black bezel; orange/white graduations. Set includes 0-6000 RPM tachometer, oil pressure gauge, battery meter and water temperature gauge. All illuminated. Mounting hardware also included.

Fits MCM/MIE D3.0L, D3.6L, and 4.2L diesels (1994 & newer.)

Quicksilver Branded, Box Point of Sale Packaged.

INTENATIONAL II TACH



79-895283Q43

Anti-fog lens. 0-6000 RPM. 270 degree dial sweep.Black face and Black bezel; Orange/White graduations. Outboards require a tachometer harness or ignition/ choke assembly for connection. Fits 3-3/8 in. (85 mm) hole in dash.

For various Mercury Outboards and MCM products. Will require an AGI converter with Verado (Digital) engines.

Quicksilver Branded, Box Point of Sale Packaged.

INTERNATIONAL II TACH



79-895283Q45

Anti-fog lens. 0-7000 RPM. 270 degree dial sweep. Black face and Black bezel; Orange/White graduations. Outboards require a tachometer harness or ignition/ choke assembly for connection. Fits 3-3/8 in. (85 mm) hole in dash.

For various Mercury Outboards and MCM products. Will require an AGI converter with Verado (Digital) engines.

Quicksilver Branded, Box Point of Sale Packaged.

INTERNATIONAL II TACH



79-895283Q46

Anti-fog lens. 0-8000 RPM. 270 degree dial sweep. Black face and Black bezel; Orange/White graduations. Outboards require a tachometer harness or ignition/ choke assembly for connection. Fits 3-3/8 in. (85 mm) hole in dash.

For various Mercury Outboards and MCM products. Will require an AGI converter with Verado (Digital) engines.

Quicksilver Branded, Box Point of Sale Packaged.

INTERNATIONAL II SPEEDOMETER



79-895285Q41

Anti-fog lens. 10-45 MPH . 270 degree dial sweep. Black face and black bezel; orange/white graduations. Includes 20 ft.(6.1 m) of tubing. Fits 3-3/8 in. (85 mm) hole in dash.

Quicksilver Branded, Box Point of Sale Packaged.

79-895285Q43

Anti-fog lens. 10-65 MPH . 270 degree dial sweep. Black face and blackbezel; orange/white graduations. Includes 20 ft.(6.1 m) of tubing. Fits 3-3/8 in. (85 mm) hole in dash.

Quicksilver Branded, Box Point of Sale Packaged.

INTERNATIONAL II SPEEDOMETER



79-895285Q44

Anti-fog lens. 10-80 MPH . 270 degree dial sweep. Black face and black bezel; orange/white graduations. Includes 20 ft.(6.1 m) of tubing. Fits 3-3/8 in. (85 mm) hole in dash.

Quicksilver Branded, Box Point of Sale Packaged.

INTERNATIONAL II SPEEDOMETER



79-895285Q48

Anti-fog lens. 10-50 Knots . 270 degree dial sweep. Black face and black bezel; orange/white graduations. Includes 20 ft.(6.1 m) of tubing. Fits 3-3/8 in. (85 mm) hole in dash.

Quicksilver Branded, Box Point of Sale Packaged.

INTERNATIONAL II VOLT METER



79-895286Q41

Anti-fog lens. Black face and Black bezel; Orange/White graduations.

Quicksilver Branded, Box Point of Sale Packaged.

INTERNATIONAL II WATER TEMPERATURE GAUGE



79-895287Q41

Anti-fog lens. 100 deg.-240 deg.F gauge. Black face and Black bezel; Orange/White graduations.

Fits all MCM/MIE gasoline engines and Mercury/Mariner V-6 outboards. Sender, if not already installed on the outboard, must be purchased separately.

Quicksilver Branded, Box Point of Sale Packaged.

INTERNATIONAL II WATER PRESSURE GAUGE



79-895288Q41

Anti-fog lens. 1 to 15 psi gauge with quick-connect terminals for connection to light. Black face and Black bezel; Orange graduations. Complete kit. Includes 25 ft.(7.6 m) of tubing and hardware.
Replacement hose not sold separate, obtain locally.

Fits Mercury/Mariner 25/30/40/45/50/75/90/115/225 (4-stroke), all V-6 (except 3.0L 1998 and older) ; and Force 75, 90 and 120. The 75/90/115/225 FourStroke outboards require a reducer fitting p/n 22-86306.

Quicksilver Branded, Box Point of Sale Packaged.

79-895288Q42

Anti-fog lens. 1 to 15 psi gauge with quick-connect terminals for connection to light. Black face and Black bezel; Orange graduation. Service replacement gauge.

Fits Mercury/Mariner 25/30/40/45/50/75/90/115/225 (4-stroke), all V-6 (except 3.0L 1998 and older) ; and Force 75, 90 and 120. The 75/90/115/225 FourStroke outboards require a reducer fitting p/n 22-86306.

Quicksilver Branded, Box Point of Sale Packaged.

INTERNATIONAL II WATER PRESSURE GAUGE



79-895288Q43

Anti-fog lens. 2 to 30 psi gauge with quick-connect terminals for connection to light. Black face and Black bezel; Orange graduations. Complete kit. Includes 25 ft.(7.6 m) of tubing and hardware.
Replacement hose not sold separate, obtain locally.

Fits Mercury/Mariner 25/30/40/45/50/75/90/115/225 (4-stroke), all V-6 (except 3.0L 1998 and older) ; and Force 75, 90 and 120. The 75/90/115/225 FourStroke outboards require a reducer fitting p/n 22-86306.

Quicksilver Branded, Box Point of Sale Packaged.

79-895288Q44

Anti-fog lens. 2 to 30 psi gauge with quick-connect terminals for connection to light. Black face and Black bezel; Orange graduations. Service replacement gauge.

Fits Mercury/Mariner 25/30/40/45/50/75/90/115/225 (4-stroke), all V-6 (except 3.0L 1998 and older) ; and Force 75, 90 and 120. The 75/90/115/225 FourStroke outboards require a reducer fitting p/n 22-86306.

Quicksilver Branded, Box Point of Sale Packaged.

INTERNATIONAL II WATER PRESSURE GAUGE



79-895288Q45

Anti-fog lens. 2 to 40 psi gauge with quick-connect terminals for connection to light. Black face and Black bezel; Orange graduations. Complete kit. Includes 25 ft.(7.6 m) of tubing and hardware.
Replacement hose not sold separate, obtain locally.

Fits 75-115 hp EFI FourStroke Outboards, serial number 1B366823 & above.

Quicksilver Branded, Box Point of Sale Packaged.

79-895288Q46

Anti-fog lens. 2 to 40 psi gauge with quick-connect terminals for connection to light. Black face and Black bezel; Orange graduations. Replacement gauge only.

Fits 75-115 hp EFI FourStroke Outboards, serial number 1B366823 & above.

Quicksilver Branded, Box Point of Sale Packaged.

INTERNATIONAL II OIL PRESSURE GAUGE



79-895289Q41

Anti-fog lens. Black face and Black bezel; Orange/White graduations.

Fits all MCM/MIE gasoline engines and Mercury/Mariner 25/30/40/45/50/225 (4-stroke) outboards. Sender, if not already installed on the outboard, must be purchased separately.

Quicksilver Branded, Box Point of Sale Packaged.

OIL PRESSURE SENDER KIT



8M0068785

Includes sender and harness used with oil pressure gauges and 21 ft.(6.4 m) of wire.

Fits Mercury/Mariner 25/30/40/45/50/60 (4-stroke).

INTERNATIONAL II FUEL GAUGE



79-895291Q41

Anti-fog lens. Black face and Black bezel; Oraqnge/White graduations. Bulk Package of 24 pcs. 12 volt system and 240 ohm sender required.

Quicksilver Branded, Box Point of Sale Packaged.

INTERNATIONAL II TRIM GAUGE



79-895292Q41

Anti-fog lens. Black face and Black bezel; Orange/White graduations. 12 volt system

Quicksilver Branded, Box Point of Sale Packaged.

INTERNATIONAL II DUAL ENGINE SYNCHRONIZER



79-895294Q41

Anti-fog lens. Black face and Black bezel; Orange/White graduations. Connects to tachometers.

Fits both 2-stroke and 4-stroke gasoline engine applications.

Quicksilver Branded, Box Point of Sale Packaged.

SYNCHRONIZEER DRIVER - GAUGES



8M0053532

This product is used with the analog gauge to synchronize multilpe engines.

Any Admiral,Flagship or International II gauges

INTERNATIONAL II CRUISELOG GAUGE



79-895295Q41

Anti-fog lens. Black face and Black bezel; Orange/White graduations. No illumination. Wiring included with this single pack.

Quicksilver Branded, Box Point of Sale Packaged.

QSS REPLACEMENT GAUGES

QSS SPEEDOMETER



79-883623Q 2

Stainless steel casing. 0-80 MPH. White face and bezel; black graduations. Fits 3-3/8 in. (86 mm) hole in dash.

QSS VOLTMETER



79-883626Q 2

8-16 volts. White face and bezel; black graduations.

QSS POWER TRIM GAUGE



79-883634Q 2

White face and bezel; back graduations.

Fits MCM and Outboards

DEPTH SOUNDERS

DIGITAL DEPTH GAUGE KIT



79-879292A01

Black face and black bezel. Digital depth readout to 199 feet, display is backlit for night operation. Easy addition to any boat. Fits in a cutout for standard 2 in.(51 mm) gauge. Kit includes adjustable alarm, transom-mounted/inside-hull-mounted transducer. Easy to follow instructions. The affordable way to add more fun and safety to boating.

Available in Multiple bezel colors

Mercury Branded, Box Point of Sale Packaged.

DIGITAL DEPTH GAUGE KIT



79-879292A02

White face and white bezel. Digital depth readout to 199 feet, display is backlit for night operation. Easy addition to any boat. Fits in a cutout for standard 2 in.(51 mm) gauge. Kit includes adjustable alarm, transom-mounted/inside-hull-mounted transducer. Easy to follow instructions. The affordable way to add more fun and safety to boating.

Available in multiple bezel colors

Mercury Branded, Box Point of Sale Packaged.

DIGITAL DEPTH GAUGE KIT



79-879292A03

Beige face and black bezel. Digital depth readout to 199 feet, display is backlit for night operation. Easy addition to any boat. Fits in a cutout for standard 2 in.(51 mm) gauge. Kit includes adjustable alarm, transom-mounted/inside-hull-mounted transducer. Easy to follow instructions. The affordable way to add more fun and safety to boating.

Mercury Branded, Box Point of Sale Packaged.

DIGITAL DEPTH GAUGE KIT



79-879292A04

Silver face and black bezel. Digital depth readout to 199 feet, display is backlit for night operation. Easy addition to any boat. Fits in a cutout for standard 2 in.(51 mm) gauge. Kit includes adjustable alarm, transom-mounted/inside-hull-mounted transducer. Easy to follow instructions. The affordable way to add more fun and safety to boating.

Mercury Branded, Box Point of Sale Packaged.

DIGITAL DEPTH GAUGE KIT



79-879292A05

Digital depth readout 2.5 ft to 200 ft display at speeds of up to 63 MPH. It has backlit lighting for night operation.and incluudes the ability to set shallow water alarm. Easy addition to any boat. Fits in a cutout for standard 2 in.(51 mm) gauge. Order face plate, bezel and transducer seperately (Standard bezel and face dial liste below)

Mercury Branded, Box Point of Sale Packaged.

TRANSDUCER - IN HULL/TRANSOM DEPTH ONLY



879292A08

Transducer that can be mounted In-Hull or Transom - Depth only

Can be used on most boats - mounted to the outside of the transom

BEZEL 52 MM



879292001

Bezel-Gold 2 inch (52 MM) Bezel is a twist fit that has a round shape. Used on Depth Sounders only

BEZEL 52 MM



879292002

Bezel-Chrome 2 inch (52 MM) Bezel is a twist fit that has a round shape. Used on Depth Sounders only

BEZEL 52 MM



879292003

Bezel-Flat Black 2 inch (52 MM) Bezel is a twist fit that has a round shape. Used on Depth Sounders only

BEZEL 52 MM



879292004

Bezel-White 2 inch (52 MM) Bezel is a twist fit that has a round shape. Used on Depth Sounders only

FACE PLATE



879292005

Face Plate -Color Black 2 inch (52 MM) Bezel is a twist fit that has a round shape. Used on Depth Sounders only

FACE PLATE



879292009

Face Plate -Color White 2 inch (52 MM) Bezel is a twist fit that has a round shape. Used on Depth Sounders only

FACE PLATE



879292007

Face Plate -Color Beige 2 inch (52 MM) Bezel is a twist fit that has a round shape. Used on Depth Sounders only

FACE PLATE

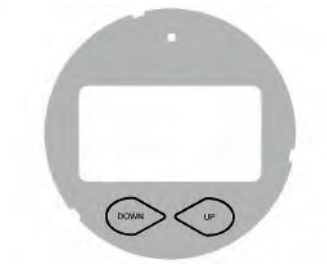

879292008

Face Plate -Color Silver 2 inch (52 MM) Bezel is a twist fit that has a round shape. Used on Depth Sounders only

DIGITAL DEPTH/ TEMP GAUGE KIT



79-879292K11

Digital depth readout dusplays 2.5 to 200 ft deep at speeds up to 63 MPH. Includes ability to set shallow water alarm warning. Also displays air or water temp.
Display is backlit for night operation. Easy addition to any boat. Fits in a cutout for standard 2 in.(51 mm) gauge.

*Order bezel and transducer seperately.
(ProView bezel and special face dial listed below.) (Order with 879292A09 orA10 Transducers)

Mercury Branded, Box Point of Sale Packaged.

TRANSDUCER - THRU HULL



79-879292A09

Transducer for Depth and Temp gauge that has 2 3/4 inch threads for deep mounting

can be used in most sterndrive and inboard applications

TRANSDUCER - IN HULL/TRANSOM



79-879292A10

Transducer that mounts In-hull or Transom that works with Depth / Temp gauge 879292A11

Can be used on most boats - mounted to the outside of the transom

BEZEL 52 MM



879155001

Bezel-White 2 inch (52 MM) Bezel is a snap fit that has a round shape.

BEZEL 52 MM



879155002

Bezel-Black Flat 2 inch (52 MM) Bezel is a snap fit that has a round shape.

BEZEL 52 MM



879155003

Bezel-Chrome 2 inch (52 MM) Bezel is a snap fit that has a round shape.

BEZEL 52 MM



879155005

Bezel-Black Gloss 2 inch (52 MM) Bezel is a snap fit that has a round shape.

BEZEL 52 MM



879154001

Bezel-White 2 inch (52 MM) Bezel is a snap fit that has a flat shape.

BEZEL 52 MM



879154002

Bezel-Black Flat 2 inch (52 MM) Bezel is a snap fit that has a flat shape.

BEZEL 52 MM



879154003

Bezel-Chrome 2 inch (52 MM) Bezel is a snap fit that has a flat shape.

BEZEL 52 MM



879154005

Bezel-Black Gloss 2 inch (52 MM) Bezel is a snap fit that has a flat shape.

BEZEL 52 MM



879156001

Bezel-White 2 inch (52 MM) Bezel is a snap fit that has a taper shape.

BEZEL 52 MM



879156002

Bezel-Black Flat 2 inch (52 MM) Bezel is a snap fit that has a taper shape.

BEZEL 52 MM



879156003

Bezel-Chrome 2 inch (52 MM) Bezel is a snap fit that has a taper shape.

BEZEL 52 MM



879156005

Bezel-Black Gloss 2 inch (52 MM) Bezel is a snap fit that has a taper shape.

FACE PLATE

879292012

Face Plate -Silver 2 inch (52 MM) Bezel is Proview version only. Used on Depth/ Temp gauges only

VDO FAMILY GAUGES

VDO PRIMARY STATION INSTRUMENTATION - STANDARD



881800A 1

Pre-wired panel with 21 pin Deutsch connector for 1.7L stern drives/inboards. Basic Instrument Set. VDO tach, warning lights for low oil pressure, charge indicator, glow plug activation, coolant temp., water in fuel. Includes key switch, stop button, instrument lights/audio warning test switch.

Fits MCM.MIE - D1.7L DTI diesels.

VDO PRIMARY STATION INSTRUMENTATION - OPTIONAL



881801A 1

Optional pre-wired panel with 21 pin Deutsch connector for 1.7L stern drives. Full Instrument Set. VDO tach, oil pressure, water temperature, battery meter & trim guage. Also warning lights for low oil pressure, charge indicator, glow plug activation, coolant temp., water in fuel. Includes key switch, stop button, instrument lights/audio warning test switch.

Fits MCM D1.7L DTI diesels.

SPEEDOMETER PICKUPS

SPEEDOMETER PICKUP



77409A 1

Pickup and mounting screws only

SPEEDOMETER PICKUP KIT

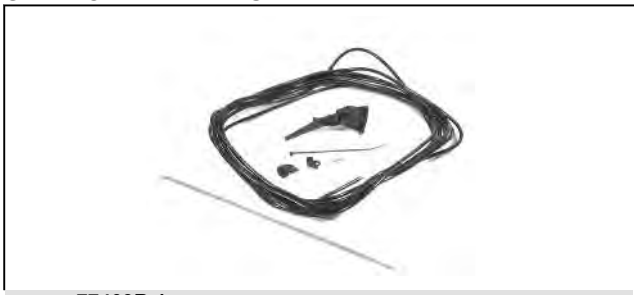

77409B 1

For use with bulk pack speedometers. Includes pickup, misc. hardware and 20 ft. (6.1 m) of tubing.

Priced & packaged in qty. of 24

SPEEDOMETER PICKUP TUBING



32- 54950 53

53 ft.(16.15 m) tubing.

32- 54950600

1 roll of 1500 ft.(457.5 m) tubing.

PITOT SENSOR KIT



8M0059530

Components needed to add pitot for speedometer gauges

150 4 Stroke Engines

WATER PRESSURE PICK-UP KITS

HOSE KIT



32-892156A01

Contains the necessary tubing, tee fitting and instruction sheet to allow the use of a 15 PSI Analog Water Pressure Gauge with the otherwise digital 1.5L OptiMax outboard.

Fits the 75/90/115hp (1.5L) OptiMax Outboard Engine, Model Year 2004 and newer.

ANALOG WATER PRESSURE FITTING KIT



32-8M0088855

Fitting kit allows installation of an analog water pressure gauges to the engine.

2.1L F75-115 Four Stroke

LAGREE FITTING FOR 2-40 PSI- WATER PRESSURE



22-896094A01

Fitting that connects to block to hook up Water pressure gauge. This fitting is included in the 40 psi gauge "kit".

Fits 75-115 hp EFI FourStroke outboards, serial number 1B366823-2B094995.

WATER PRESSURE KIT



8M0059531

Components needed for water pressure gauges

150 4 Stroke Engines

WATER TEMPERATURE SENDERS

Water temperature senders used for operation of a temperature gauge.

WATER TEMPERATURE SENDER



13536A13

A two wire temperature sender for use on V-6 outboard product. Furnished standard on engine powerhead, the fiche card specific to the application should be used to verify correct use.

WATER TEMPERATURE SENDER



13536A14

A four wire temperature sender for use on V-6 outboard product. Furnished standard on engine powerhead, the fiche card specific to the application should be used to verify correct use.

WATER TEMPERATURE SENDER



12415

(1/8"-27 NPT threads)

Fits outboard applications.

TEMPERATURE SENDER KIT



12415A 2

Allows adding a temperature sender to outboards equipped with a factory built coastal flush. Includes a temperature sender, fittings, cable ties and instruction sheet. This kit provides for the use of a coastal flush and a temperature sender at the same time.

Fits Mercury/Mariner 75-125 hp. (1993 and newer) 2 cycle outboards. Primarily designed for adding to a Saltwater model which comes with the coastal flush as standard equipment.

ADAPTER HARNESS



84- 11149A55

Allows water temperature gauge hook-up to the 225 EFI FourStroke outboard.

WATER TEMPERATURE SENDER



15995

Used for temperature gauge

Fits MCM 3.7L engines

ENGINE WATER TEMPERATURE SENDER



49734

For dual station installations, used for temperature gauge

Fits MCM/MIE engines

WATER TEMPERATURE SENDER



806490T

3/8 in. x 18 NPT threads, used for temperature gauge

Fits MCM/MIE engines

WATER TEMPERATURE SENDER



97258A 1

1/2 in. x 14 NPT threads, used for temperature gauge

Fits MCM/MIE engines

COOLANT TEMPERATURE SENDER



805218T

Used for temperature gauge

Fits MCM/MIE EFI models

OIL PRESSURE SENDERS

OIL PRESSURE SENSOR KIT



866814A01

Required when SmartCraft is installed on 3.0L MPI & Vazer engines. Replaces the original analog oil pressure sensor with a digital sensor.
Fits MCM 3.0L MPI & Vazer engines

OIL PRESSURE SENDER



8M0068784

For use with 80 psi electric oil pressure gauge

OIL PRESSURE SENDER KIT



8M0068785

Includes sender and harness used with oil pressure gauges and 21 ft.(6.4 m) of wire.
Fits Mercury/Mariner 25/30/40/45/50/60 (4-stroke).

OIL PRESSURE SENDER



8M0068784

For use with 80 psi electric oil pressure gauge

OIL PRESSURE SENDER



889835A01

150 PSI oil gauge sender with a 90 degree elbow and installation instruction sheet.
F225 4 stroke engine

POWER TRIM SENDERS

POWER TRIM SENDER



805320A03

Includes trim limit switch also.
Fits MC-I, R, MR, Alpha One, Gen II, Bravo drives.

POWER TRIM SENDER



805130A 6

For dual station applications.
Fits MCM I/R/MR/Alpha One/Gen II/Bravo One & Two drives.

POWER TRIM SENDER



805130A 8

For dual station applications.
Fits MCM TR & TRS drives.

POWER TRIM SENDER CONVERSION KIT



805134A 3

Converts single station sender to a dual station sender.
Fits MCM Alpha One/Gen II/Bravo One & Two drives.

ANALOG TRIM SENDER (PORT MOUNT)



8M0098273

Port mount analog trim sender (black color)
40-60 Family 2, 75-115 EFI and Optimax (not digital Optimax) - Port mount only

ANALOG TRIM SENDER (STARBOARD MOUNT)



8M0098264

Starboard mount analog trim sender (natural color)
40-60 Family 2, 75-115 EFI and Optimax - Starboard mount only

POWER TRIM SENDER



822573A12

Port mounted. Contains 6-32 threaded mounting screws.
Fits various in-line outboards. See application chart for specific engine models.

POWER TRIM SENDER

859187A 1

Port mounted.
Fits all SmartCraft compatible engines.

POWER TRIM SENDER

888617001

Starboard mounted.
Fits the Mercury/Mariner V-225 FourStroke outboard engine.

POWER TRIM SENDER

891777A01

Starboard Mounted. Required for digital gauge applications.
Fits SmartCraft compatible engines.

TRIM SENSOR CONVERTER KIT

8M0059529

This kit will allow you to convert the signal from the digital sensor to an analog signal. It will allow you to drive an analog gauge for trim only without changing the sensor to an analog sensor. This kit will connect directly to the harness inside the emgine cowl.
F150 EFI FourStroke outboard engine only

TRIM CONVERTER AND TILT UP LIMIT KIT



8M0087542

This kit allows the conversion of the trim signal from the analog sender to a digital output for Smartcraft gauge applications. The kit also has an additional feature that allows the max tilt up positon to be set to avoid interference when tilting the engine completely up.

2.1L F75-115 Four Stroke

POWER TRIM SENDER CHART

Mercury/Mariner Trim Senders

Model	Brand	Model Notes	Year Range	Country	Serial # Range	Port Mount Trim Sender	Stbd. Mount Trim Sender
25 FourStroke	Mercury/Mariner	Carb Models only	1998 - 2006	USA	0G590000 and up	822573A12	N/A
25 FourStroke	Mercury/Mariner	Carb Models only	1999 - 2006	BEL	0P017000 and up	822573A12	N/A
25 FourStroke	Mercury/Mariner	EFI w/ 6-32 threads	2006 - 2016	JPN	0R106999 and up	822573A12	N/A
25 FourStroke	Mercury/Mariner	EFI w/ 6-32 threads	2006 - 2016	BEL	0P401000 and up	822573A12	N/A
30	Mercury/Mariner	2 cylinder	1995 - 2016	USA	0G124405 and up	822573A12	N/A
30	Mercury/Mariner	2 cylinder	1995 - 2016	BEL	9840763 and up	822573A12	N/A
30 FourStroke	Mercury/Mariner	3 cylinder Non-BigFoot Models.	1999 - 2005	USA	0G760300 - 1B226999	N/A	8M0098264
30 FourStroke	Mercury/Mariner	3 cylinder Non-BigFoot models.	1999 - 2005	BEL	0P017000 - 0P400999	N/A	8M0098264
30 FourStroke	Mercury/Mariner	EFI w/ 6-32 threads	2006 - 2016	JPN	0R106999 and up	822573A12	N/A
30 FourStroke	Mercury/Mariner	EFI w/ 6-32 threads	2006 - 2016	BEL	0P401000 and up	822573A12	N/A
30 JET	Mercury/Mariner	4 cylinder	1993 - 1997	USA	0C159200 - 0G589999	N/A	N/A
30 JET	Mercury/Mariner	3 cylinder	1998 - 2000	USA	0G590000 - 0T178499	822573A12	N/A
30 JET	Mercury/Mariner	3 cylinder	1999 - 2000	BEL	0P017000 - 0P094499	822573A12	N/A
35	Mercury/Mariner	2 cylinder	1984 - 1989	USA	6445653 - 0C221999	N/A	N/A
35	Mercury/Mariner	2 cylinder	1984 - 1989	BEL	9384476 and up	N/A	N/A
35	Mercury/Mariner	2 cylinder	1984 - 1989	CAN	7209608 and up	N/A	N/A
40	Mercury/Mariner	4 cylinder with integral trim.	1989 - 1992	USA	0C159200 - 0D181999	N/A	N/A
40	Mercury/Mariner	4 cylinder with integral trim.	1989 - 1992	BEL	9570790 - 9740999	N/A	N/A
40	Mercury/Mariner	4 cylinder	1993 - 1997	USA	0D182000 - 0G589999	N/A	8M0098264
40	Mercury/Mariner	4 cylinder	1993 - 1997	BEL	9741000 - 9973099	N/A	8M0098264
40	Mercury/Mariner	2 cylinder	1995 - 2016	USA	0G124405 and up	822573A12	N/A
40	Mercury/Mariner	2 cylinder	1995 - 2016	BEL	9840763 and up	822573A12	N/A
40	Mercury/Mariner	3 cylinder, 59 CID, Long shaft only.	1997 1/2 - 2016	USA	0G531301 and up	822573A12	N/A
40	Mercury/Mariner	3 cylinder, 59 CID, Long shaft only.	1997 1/2 - 2016	BEL	9973100 and up	822573A12	N/A
40 FourStroke	Mercury/Mariner	3 cylinder Non-BigFoot models.	1999 - 2016	USA	0G760300 and up	N/A	8M0098264
40 FourStroke	Mercury/Mariner	3 cylinder Non-BigFoot models.	1999 - 2016	BEL	0P017000 and up	N/A	8M0098264
40 FourStroke	Mercury/Mariner	3 cylinder BigFoot models.	1999 - 2002	USA	0G760300 - 0T408999	N/A	8M0098264
40 FourStroke	Mercury/Mariner	3 cylinder BigFoot models.	1999 - 2002	BEL	0P017000 - 0P153499	N/A	8M0098264
40 FourStroke	Mercury/Mariner	4 cylinder Italy/Bodensee	1995 - 1998	USA	0G231123 - 0G760299	822573A12	N/A
40 FourStroke	Mercury/Mariner	4 cylinder Italy/Bodensee	1999 - 2000	BEL	0P073323 - 0P094499	N/A	8M0098264
40 FourStroke	Mercury/Mariner	4 cylinder, 996 cc., BigFoot models.	2001 - 2016	USA	0T228405 - 1B344306	N/A	8M0098264
40 FourStroke	Mercury/Mariner	4 cylinder, 996 cc., BigFoot models.	2001 - 2016	BEL	0P094500 and up	N/A	8M0098264
40 FourStroke	Mercury/Mariner	4 cylinder, 996 cc., BigFoot models.	2006 - 2016	CHN	1C000001 and up	N/A	8M0098264

Model	Brand	Model Notes	Year Range	Country	Serial # Range	Port Mount Trim Sender	Stbd. Mount Trim Sender
40 JET	Mercury/Mariner		2001 - 2016	USA	0T178500 and up	822573A12	N/A
40 JET	Mercury/Mariner		2001 - 2016	BEL	0P094500 and up	822573A12	N/A
45	Mercury/Mariner	4 cylinder	1986 - 1989	USA	5531630 - 0D000749	N/A	N/A
45	Mercury/Mariner	4 cylinder	1986 - 1989	AUS	8063985 and up	N/A	N/A
45	Mercury/Mariner	4 cylinder	1986 - 1989	BEL	9248006 - 9683054	N/A	N/A
45	Mercury/Mariner	4 cylinder	1986 - 1989	CAN	7143688 and up	N/A	N/A
45 FourStroke	Mercury/Mariner	4 cylinder Italy/Bodensee	1995 - 1998	USA	0G231123 - 0G760299	822573A12	N/A
45 FourStroke	Mercury/Mariner	4 cylinder Italy/Bodensee	1999 - 2000	BEL	0P073323 - 0P094499	N/A	8M0098264
45 JET	Mercury/Mariner	3 cylinder, 51.8 CID	1993 - 1997	USA	0D182000 - 0G589999	N/A	8M0098264
45 JET	Mercury/Mariner	3 cylinder, 59 CID	1998 - 2000	USA	0G590000 - 0T178499	822573A12	N/A
45 JET	Mercury/Mariner	3 cylinder, 59 CID	1998 - 2000	BEL	0P017000 - 0P094499	822573A12	N/A
50	Mercury/Mariner	4 cylinder with external trim.	1976 - 1985	USA	4357640 - 6428680	N/A	N/A
50	Mercury/Mariner	4 cylinder with external trim.	1976 - 1985	AUS	8030090 and up	N/A	N/A
50	Mercury/Mariner	4 cylinder with external trim.	1976 - 1985	BEL	9107214 - 9469199	N/A	N/A
50	Mercury/Mariner	4 cylinder with external trim.	1976 - 1985	CAN	7068998 - 7208332	N/A	N/A
50	Mercury/Mariner	3 cylinder with external trim.	1986 - 1992	USA	6428681 - 0D181999	N/A	N/A
50	Mercury/Mariner	3 cylinder with external trim.	1986 - 1992	BEL	9385911 - 9733881	N/A	N/A
50	Mercury/Mariner	3 cylinder with external trim.	1986 - 1992	CAN	7208333 and up	N/A	N/A
50	Mercury/Mariner	3 cylinder, 51.8 CID	1993 - 1997	USA	0D182000 - 0G589999	N/A	8M0098264
50	Mercury/Mariner	3 cylinder, 51.8 CID	1993 - 1997	BEL	9733882 - 9973099	N/A	8M0098264
50	Mercury/Mariner	3 cylinder, 59 CID	1998 - 2016	USA	0G590000 and up	822573A12	N/A
50	Mercury/Mariner	3 cylinder, 59 CID	1998 - 2016	BEL	9973100 and up	822573A12	N/A
50 FourStroke	Mercury/Mariner	4 cylinder Non-BigFoot models.	1995 - 1998	USA	0G231123 - 0G760299	822573A12	N/A
50 FourStroke	Mercury/Mariner	4 cylinder Non-BigFoot models.	1999 - 2000	USA	0G760300 - 0T178499	N/A	8M0098264
50 FourStroke	Mercury/Mariner	4 cylinder BigFoot models.	1998 - 2000	USA	0G590000 - 0T178499	N/A	8M0098264
50 FourStroke	Mercury/Mariner	4 cylinder, 996 cc., all models.	2001 - 2016	USA	0T178500 - 1B344306	N/A	8M0098264
50 FourStroke	Mercury/Mariner	4 cylinder, 996 cc., all models.	2001 - 2016	BEL	0P094500 and up	N/A	8M0098264
50 FourStroke	Mercury/Mariner	4 cylinder, 996 cc., BigFoot models.	2006 - 2016	CHN	1C000001 and up	N/A	8M0098264
55	Mercury/Mariner	3 cylinder, 51.8 CID	1996 - 1997	USA	0D00750 - 0G589999	N/A	N/A
55	Mercury/Mariner	3 cylinder, 51.8 CID	1996 - 1997	BEL	9741042 - 9973099	N/A	N/A
55	Mercury/Mariner	3 cylinder, 59 CID	1998 - 2016	USA	0G590000 and up	N/A	8M0098264
55	Mercury/Mariner	3 cylinder, 59 CID	1998 - 2016	BEL	9973100 and up	N/A	8M0098264
60	Mercury/Mariner	3 cylinder with external trim.	1984 - 1987	USA	6428681 - 0B122929	N/A	N/A
60	Mercury/Mariner	3 cylinder with external trim.	1984 - 1987	BEL	9385911 - 9469199	N/A	N/A
60	Mercury/Mariner	3 cylinder with external trim.	1984 - 1987	CAN	7208333 - 0A721307	N/A	N/A
60	Mercury/Mariner	3 cylinder with internal trim.	1989 - 1992	USA	0C160936 - 0D181999	N/A	N/A
60	Mercury/Mariner	3 cylinder with internal trim.	1989 - 1992	BEL	9469200 - 9733881	N/A	N/A
60	Mercury/Mariner	3 cylinder with internal trim.	1989 - 1992	CAN	0A721308 and up	N/A	N/A
60	Mercury/Mariner	3 cylinder, all models.	1993 - 2016	USA	0D182000 and up	N/A	8M0098264
60	Mercury/Mariner	3 cylinder, all models.	1993 - 2016	BEL	9733882 and up	N/A	8M0098264
60 FourStroke	Mercury/Mariner	4 cylinder, 996 cc., all models.	2001 - 2016	USA	0T178500 - 1B344306	N/A	8M0098264
60 FourStroke	Mercury/Mariner	4 cylinder, 996 cc., all models.	2001 - 2016	BEL	0P094500 and up	N/A	8M0098264
60 FourStroke	Mercury/Mariner	4 cylinder, 996 cc., BigFoot models.	2006 - 2016	CHN	1C000001 and up	N/A	8M0098264
70	Mercury/Mariner	3 cylinder with 3-ram trim.	1987 - 1989	USA	0A966142 - 0C221999	8M0098273	N/A
70	Mercury/Mariner	3 cylinder with 3-ram trim.	1987 - 1989	BEL	9502500 - 9589032	8M0098273	N/A
70	Mercury/Mariner	3 cylinder with single ram trim.	1987 - 1989	USA	0A966142 - 0C221999	N/A	8M0098264
70	Mercury/Mariner	3 cylinder with single ram trim.	1987 - 1989	BEL	9502500 - 9589032	N/A	8M0098264
75	Mercury/Mariner	4 cylinder with 3-ram trim.	1984 - 1987	USA	6428681 - 0B122929	8M0098273	N/A
75	Mercury/Mariner	4 cylinder with 3-ram trim.	1984 - 1987	BEL	9385911 - 9469199	8M0098273	N/A
75	Mercury/Mariner	4 cylinder with 3-ram trim.	1984 - 1987	CAN	7208333 - 0A721307	8M0098273	N/A
75	Mercury/Mariner	4 cylinder with single ram trim.	1984 - 1987	USA	6428681 - 0B122929	N/A	8M0098264
75	Mercury/Mariner	4 cylinder with single ram trim.	1984 - 1987	BEL	9385911 - 9469199	N/A	8M0098264
75	Mercury/Mariner	4 cylinder with single ram trim.	1984 - 1987	CAN	7208333 - 0A721307	N/A	8M0098264

Model	Brand	Model Notes	Year Range	Country	Serial # Range	Port Mount Trim Sender	Stbd. Mount Trim Sender
75	Mercury/Mariner	3 cylinder with 3-ram trim.	1987 - 1997 1/2	USA	0A966142 - 0G531985	8M0098273	N/A
75	Mercury/Mariner	3 cylinder with 3-ram trim.	1987 - 1997 1/2	BEL	9502500 - 9502500	8M0098273	N/A
75	Mercury/Mariner	3 cylinder with single ram trim.	1987 - 2016	USA	0A966142 and up	N/A	8M0098264
75	Mercury/Mariner	3 cylinder with single ram trim.	1987 - 2016	BEL	9502500 and up	N/A	8M0098264
75 Optimax	Mercury/Mariner	1.5L DFI, non-digital sender.	2004 - 2016	USA	0T800750 and up	N/A	8M0098264(1)
75 Optimax	Mercury/Mariner	1.5L DFI, digital sender.	2004 - 2016	USA	0T800750 and up	N/A	891777A01(2)
75 FourStroke	Mercury/Mariner		2000 - 2005	USA	0G960500 - 1B366822	N/A	8M0098264
75 FourStroke	Mercury/Mariner		2006 - 2016		1B366823 - 2B094955	N/A	8M0098264
80	Mercury/Mariner	4 cylinder with external trim.	1978 - 1983	USA	4831999 - 6432900	N/A	N/A
80	Mercury/Mariner	4 cylinder with external trim.	1978 - 1983	AUS	8050200 and up	N/A	N/A
80	Mercury/Mariner	4 cylinder with external trim.	1978 - 1983	BEL	9177626 - 9393855	N/A	N/A
80	Mercury/Mariner	4 cylinder with external trim.	1978 - 1983	CAN	7110998 - 7208572	N/A	N/A
80	Mercury/Mariner	3 cylinder with 3-ram trim.	1987 - 1989	USA	0A966142 - 0C221999	8M0098273	N/A
80	Mercury/Mariner	3 cylinder with 3-ram trim.	1987 - 1989	BEL	9502500 - 9589032	8M0098273	N/A
80	Mercury/Mariner	3 cylinder with single ram trim.	1987 - 1989	USA	0A966142 - 0C221999	N/A	8M0098264
80	Mercury/Mariner	3 cylinder with single ram trim.	1987 - 1989	BEL	9502500 - 9589032	N/A	8M0098264
90	Mercury/Mariner	6 cylinder with external trim.	1978 - 1986	USA	4845301 - 0A966141	N/A	N/A
90	Mercury/Mariner	6 cylinder with external trim.	1978 - 1986	AUS	8060545 and up	N/A	N/A
90	Mercury/Mariner	6 cylinder with external trim.	1978 - 1986	CAN	7111698 and up	N/A	N/A
90	Mercury/Mariner	3 cylinder with 3-ram trim.	1987 - 1997 1/2	USA	0A966142 - 0G531985	8M0098273	N/A
90	Mercury/Mariner	3 cylinder with 3-ram trim.	1987 - 1997 1/2	BEL	9502500 - 9502500	8M0098273	N/A
90	Mercury/Mariner	3 cylinder with single ram trim.	1987 - 2016	USA	0A966142 and up	N/A	8M0098264
90	Mercury/Mariner	3 cylinder with single ram trim.	1987 - 2016	BEL	9502500 and up	N/A	8M0098264
90 Optimax	Mercury/Mariner	1.5L DFI, non-digital sender.	2004 - 2016	USA	0T800750 and up	N/A	8M0098264(1)
90 Optimax	Mercury/Mariner	1.5L DFI, digital sender.	2004 - 2016	USA	0T800750 and up	N/A	891777A01(2)
90 FourStroke	Mercury/Mariner		2000 - 2006	USA	0G960500 - 1B366822	N/A	8M0098264
90 FourStroke	Mercury/Mariner		2006 - 2016	USA	1B366823 - 2B094955	N/A	8M0098264
100	Mercury/Mariner	4 cylinder with 3-ram trim.	1988 - 1993	USA	0B209468 - 0D283221	8M0098273	8M0098264
100	Mercury/Mariner	4 cylinder with 3-ram trim.	1988 - 1993	BEL	9523034 - 9793576	8M0098273	8M0098264
100	Mercury/Mariner	4 cylinder with single ram trim.	1988 - 2016	USA	0B209468 and up	N/A	8M0098264
100	Mercury/Mariner	4 cylinder with single ram trim.	1988 - 2016	BEL	9523034 and up	N/A	8M0098264
115	Mercury/Mariner	6 cylinder with external trim.	1978 - 1988	USA	4855153 - 0C099999	N/A	N/A
115	Mercury/Mariner	6 cylinder with external trim.	1978 - 1988	AUS	8051950 and up	N/A	N/A
115	Mercury/Mariner	6 cylinder with external trim.	1978 - 1988	CAN	7112248 and up	N/A	N/A
115	Mercury/Mariner	4 cylinder with 3-ram trim.	1988 - 1993	USA	0B209468 - 0D283221	8M0098273	8M0098264
115	Mercury/Mariner	4 cylinder with 3-ram trim.	1988 - 1993	BEL	9523034 - 9793576	8M0098273	8M0098264
115	Mercury/Mariner	4 cylinder with single ram trim.	1988 - 2016	USA	0B209468 and up	N/A	8M0098264
115	Mercury/Mariner	4 cylinder with single ram trim.	1988 - 2016	BEL	9523034 and up	N/A	8M0098264
115 Optimax	Mercury/Mariner	2.5L DFI, non-digital sender.	2000	USA	0G960500 - 0T178499	8M0098273(1)	N/A
115 Optimax	Mercury/Mariner	2.5L DFI, digital sender.	2000	USA	0G960500 - 0T178499	859187A 1(2)	N/A
115 Optimax	Mercury/Mariner	1.5L DFI, non-digital sender.	2004 - 2016	USA	0T800750 and up	N/A	8M0098264(1)
115 Optimax	Mercury/Mariner	1.5L DFI, digital sender.	2004 - 2016	USA	0T800750 and up	N/A	891777A01(2)
115 FourStroke	Mercury/Mariner	EFI	2001 - 2005	USA	0T178500 - 1B366822	N/A	8M0098264
115 FourStroke	Mercury/Mariner	EFI	2006 - 2016	USA	1B366823 - 2B094955	N/A	8M0098264
125	Mercury/Mariner	4 cylinder	1994 - 2016	USA	0D283222 and up	N/A	8M0098264
125	Mercury/Mariner	4 cylinder	1994 - 2016	BEL	9793577 and up	N/A	8M0098264
225 FourStroke	Mercury/Mariner		2003 - 2016	USA	0T653945 and up	N/A	888617001(1)
V-6	Mercury/Mariner	Non-digital sender & 3-ram trim.	All	USA	All - All	8M0098273(1)	N/A
V-6	Mercury/Mariner	Digital sender & 3-ram trim.	2000 - 2016	USA	0G960500 and up	859187A 1(2)	N/A

(1) For use with analog gauges.

(2) For use with 555 controller and SmartCraft gauges or monitors.

SERVICE MONITORS

Digital tach and hourmeter. Features LCD display and resettable hourmeter.

SERVICE MONITOR



79-8M0050399

Fits most Outboards and gasoline MCM/MIE engines. Will not work with diesel product, Verado outboards or the F75-115 FourStroke outboard 1B366823-2B094955. Replaces old versions with a universal product.

Quicksilver Branded, Clamshell Package Point of Sale Packaged.

INSTRUMENT HOLE COVER KIT

Allows pre-drilling dash for adding 2-1/8 in.(54 mm) gauges at a later date.

INSTRUMENT HOLE COVER KIT



79- 79889A 1

WARNING LIGHT KITS - SAFETY SYSTEMS & HARNESSES

WARNING LIGHT GAUGE



17334A 2

Single halogen light. Indicates low oil level/flow (flashing light) and engine overheat (steady light). With EFI models, a flashing light also indicates that the water separating fuel filter requires servicing. Includes 4 ft.(1.2 m) harness.

Fits Mercury/Mariner 30-125hp. thru current models, 135hp. V-6, carb and EFI (USA 0G960499 and prior) and 150-200hp. (2.5L) carb and EFI (USA 0G960499 and prior).

17334A 7

Single LED light. Indicates low oil level/flow (flashing light) and engine overheat (steady light). With EFI models, a flashing light also indicates that the water separating fuel filter requires servicing. Includes 4 ft.(1.2 m) harness.

Fits Mercury/Mariner 135 hp. 2.0L V-6 outboards, carb and EFI (USA 0G960500 and newer) and Mercury/Mariner 2.5L V-6 outboard engines, carb and EFI (USA 0G960500 and newer).

LOW OIL WARNING KIT



8M0031424

Designed to be installed at or near the remote control box, the warning signal is received through the tachometer harness.

Works with electric remote control models only. Fits the 15 hp. FourStroke 0R235949 and above, 20 hp. FourStroke and the 25/30 hp. EFI FourStroke outboards.

WARNING LIGHT GAUGE



79-859697K 2

Flagship series 2 light gauge. Black face and bezel. Indicates low oil level and engine overheat.

Fits F225 4 stroke engines. (150 PSI oil sender 889835A01 required)

Mercury Branded

OIL PRESSURE SENDER



889835A01

150 PSI oil gauge sender with a 90 degree elbow and installation instruction sheet.

F225 4 stroke engine

WARNING LIGHT GAUGE



79-859698A 1

Flagship series 3 light gauge. Black face and bezel. Indicates low oil level, engine overheat and water in fuel.

Fits Mercury/Mariner 225/250 EFI (3.0L), Model Year 2001 and prior.

Mercury Branded

20 FT. EXTENSION HARNESS



84-827752A 1

For use with 3 light warning kit.

20 FT. EXTENSION HARNESS



84-835359A 1

For use with 4 light warning kit.

WARNING HORN KIT



816492A 9

Kit includes the new style piezo horn used with 1986 and newer remote controls and wiring harnesses.

Fits 2000 and newer Mercury/Mariner V-6 outboards. Also fits MY2002 and newer 525-1200 Hp. Race Sterndrives.

MOVING PROP ALERT LIGHT SYSTEM



8M0052290

Moving Prop (MP Alert) Alert Light system is a highly visible light system that provides additional notice to swimmers when the engine is running and the propeller is in motion. This kit is a one light kit that includes a smart light with 6 LED lights, a control module (connected to the engine computer) and the wiring harness that is 20 ft (other lengths available) Also included is hardware needed to mount the light. Additonal lights can be purchased to add to the system.

Any SmartCraft Mercury engine (Outboard 40 HP and up, MerCruiser and Racing products)

MOVING PROP ALERT LIGHT SYSTEM - ROUND

8M0060248

Moving Prop Alert (MP Alert) Light system is a highly visible light system that provides additional notice to swimmers when the engine is running and the propeller is in motion. This kit is a one light kit that includes a smart light with 6 LED lights, a control module (connected to the engine computer) and a 20 ft wiring harness (other lengths available). Also included is hardware needed to mount the light. Additonal lights can be purchased to add to the system. (Round Shape)

Works with all SmartCraft compatible engines.

MOVING PROP ALERT LIGHT SYSTEM - OVAL



8M0074744

Moving Prop (MP Alert) Alert Light system is a highly visible light system that provides additional notice to swimmers when the engine is running and the propeller is in motion. This kit is a one light kit that includes a smart light with 6 LED lights, a control module (connected to the engine computer) and a 20 ft wiring harness(other lengths available). Also included is hardware needed to mount the light. Additional lights can be purchased to add to the system. (Oval Shape)

Works with all SmartCraft compatible engines.

8M0074747

Moving Prop (MP Alert) Alert Light system is a highly visible light system that provides additional notice to swimmers when the engine is running and the propeller is in motion. This kit is a one light kit that includes the smart light with 6 LED lights each , a control module (connected to the engine computer) and a 20 ft wiring harness (other lengths available). Also included is hardware needed to mount the light. Additonal lights can be purchased to add to the system. (Oval Shape)

Analog Engine / Non Mercury engines (Single Engines Only)

MOVING PROP ALERT LIGHT SYSTEM - ROUND



8M0060249

Moving Prop (MP Alert) Alert Light system is a highly visible light system that provides additional notice to swimmers when the engine is running and the propeller is in motion. This kit is a two light kit that includes the smart lights with 6 LED lights each , a control module (connected to the engine computer) and a 20 ft wiring harness (other lengths available). Also included is hardware needed to mount the light. Additonal lights can be purchased to add to the system. (Round Shape)

Works with all SmartCraft compatible engines.

MOVING PROP ALERT LIGHT SYSTEM

8M0052291

Moving Prop (MP Alert) Alert Light system is a highly visible light system that provides additional notice to swimmers when the engine is running and the propeller is in motion. This kit is a two light kit that includes the smart lights with 6 LED lights each , a control module (connected to the engine computer) and the wiring harness that is 20 ft (other lengths available) Also included is hardware needed to mount the light. Additonal lights can be purchased to add to the system.

Any Can Based (reference SmartCraft) Mercury engine (OB- 40 HP and up as well as Mercruiser products)

MOVING PROP ALERT LIGHT SYSTEM - OVAL



8M0109507

Moving Prop (MP Alert) Alert Light system is a highly visible light system that provides additional notice to swimmers when the engine is running and the propeller is in motion. This kit is a two light kit that includes the smart lights with 6 LED lights each , a control module (connected to the engine computer) and a 20 ft wiring harness (other lengths available). Also included is hardware needed to mount the light. Additional lights can be purchased to add to the system. (Oval Shape)

Works with all SmartCraft compatible engines.

MOVING PROP ALERT LIGHT SYSTEM - OVAL



8M0109508

Moving Prop (MP Alert) Alert Light system is a highly visible light system that provides additional notice to swimmers when the engine is running and the propeller is in motion. This kit is a two light kit that includes 2 smart lights with 6 LED lights, a control module (connected to the engine computer) and a 20 ft wiring harness (other lengths available). Also included is hardware needed to mount the lights. Additonal lights can be purchased to add to the system. (Oval Shape)

Analog Engine / Non Mercury engines (Single Engines Only)

LIGHT SWITCH WITH LED - MP ALERT



8M0052292

Optional switch and warning light kit for the MP Alert Light System. This switch can be added to the system to control the on-off function manually.

Works with all SmartCraft compatible engines.

MP ALERT - ADD A LIGHT



8M0060251

This kit will allow you to add additional lights to the MP Alert kits. Each kit includes one light and a Y harness to allow you to easily add a third or forth light on the boat.

Works with all SmartCraft compatible engines.

8M0058173

This kit will allow you to add additional lights to the MP Alert kits. Each kit includes one light and a Y hanress to allow you to easily add a third or forth light on the boat.

Any Mercury 40 HP and up engine that is SmartCraft compatible

MP ALERT - ADD A LIGHT



8M0109505

This kit will allow you to add additional lights to the MP Alert kits. Each kit includes one light and a Y harness to allow you to easily add a third or forth light on the boat. (Oval Shape)

Works with all SmartCraft compatible engines.

MP ALERT - Y HARNESS



84-8M0053250

Y Harness for MP Alert to allow easy installation of third or forth light on the boat.

Works with any SmartCraft compatible engine.

MP ALERT LIGHT



88-8M0060252

Service replacement light for the MP Alert kit

MP Alert

MP ALERT LIGHT



8M0109506

Service replacement light for the MP Alert kit (Oval Shape)

CONTROL MODULE MP ALERT



84-8M0052988

Module used to control the lights on MP Alert.

Used with MP Alert light system (controller)

MODULE, MP ALERT

84-8M0080216

Module used to control the lights on MP Alert.

Used with MP Alert light system (controller) Analog and Non-Mercury Engines

HARNESS EXTENSION MP ALERT



84-8M0054183

Harness for connecting MP Alert light to front of boat - 10 ft

84-8M0054185

Harness for connecting MP Alert light to front of boat - 20 ft

84-8M0054186

Harness for connecting MP Alert light to front of boat - 30 ft

84-8M0054187

Harness for connecting MP Alert light to front of boat - 50 ft

MECHANICAL TRIM POSITION INDICATORS - 1 POINTER

Cables not included with indicator kits. Order F5H208/_ cables or 64-820676A_ cables to proper length. Trim position indicator and bezel selection chart available within the Instrument section.

TRIM POSITION INDICATOR



848444A 6

1 pointer. Bottom cable entry. White faceplate and bezel.
Fits single sterndrive.

848445A 1

1 pointer. Top cable entry. Gray faceplate and black bezel.
Fits single sterndrive.

TRIM POSITION INDICATOR



848445A 6

1 pointer. Top cable entry. White faceplate and bezel.
Fits single sterndrive.

MECHANICAL TRIM POSITION INDICATORS - 2 POINTER

Cables not included with indicator kits. Order F5H208/_ cables or 64-820676A_ cables to proper length. Trim position indicator and bezel selection chart available within the Instrument section.

TRIM POSITION INDICATOR



845313A 1

2 pointer. Top cable entry. Gray faceplate and black bezel.
Fits twin MCM sterndrives or trim tabs.

TRIM POSITION INDICATOR



845313A 6

2 pointer. Top cable entry. White faceplate and bezel.
Fits twin MCM sterndrives or trim tabs.

TRIM POSITION INDICATOR



845314A 6

2 pointer. Bottom cable entry. White faceplate and bezel.
Fits twin MCM sterndrives or trim tabs.

MECHANICAL TRIM POSITION INDICATORS - 3 POINTER

Cables not included with indicator kits. Order F5H208/_ cables or 64-820676A_ cables to proper length. Trim position indicator and bezel selection chart available within the Instrument section.

TRIM POSITION INDICATOR



845765A 6

3 pointer. Top cable entry. White faceplate and bezel.
Fits triple MCM sterndrives or single MCM sterndrive and twin trim tabs.

TRIM POSITION INDICATOR



845766A 6

3 pointer. Bottom cable entry. White faceplate and bezel.
Fits triple MCM sterndrives or single MCM sterndrive and twin trim tabs.

MECHANICAL TRIM POSITION INDICATORS - 4 POINTER

Cables not included with indicator kits. Order F5H208/_ cables or 64-820676A_ cables to proper length. Trim position indicator and bezel selection chart available within the Instrument section.

TRIM POSITION INDICATOR



844945A 1

4 pointer. Bottom cable entry. Gray faceplate and black bezel.
Fits twin MCM sterndrives and twin trim tabs.

TRIM POSITION INDICATOR



844945A 6

4 pointer. Bottom cable entry. White faceplate and bezel.
Fits twin MCM sterndrives and twin trim tabs.

TRIM POSITION INDICATOR



844944A 1

4 pointer. Top cable entry. Gray faceplate and black bezel.
Fits twin MCM sterndrives and twin trim tabs

TRIM POSITION INDICATOR



844944A 6

4 pointer. Top cable entry. White faceplate and bezel.
Fits twin MCM sterndrives and twin trim tabs

TRIM POSITION INDICATOR



845983A 1

4 pointer. Bottom cable entry. Gray faceplate and black bezel.
Fits twin MCM sterndrives and twin trim tabs.

TRIM POSITION INDICATOR



845983A 6

4 pointer. Bottom cable entry. White faceplate and bezel.
Fits twin MCM sterndrives and twin trim tabs.

TRIM POSITION INDICATOR



845982A 6

4 pointer. Top cable entry. White faceplate and bezel.
Fits twin MCM sterndrives and twin trim tabs.

MECHANICAL TRIM POSITION INDICATORS - 5 POINTER

Cables not included with indicator kits. Order F5H208/_ cables or 64-820676A_ cables to proper length. Trim position indicator and bezel selection chart available within the Instrument section.

TRIM POSITION INDICATOR



845457A 1

5 pointer. Bottom cable entry. Gray faceplate and black bezel.
Fits triple MCM sterndrives and twin trim tabs.

TRIM POSITION INDICATOR

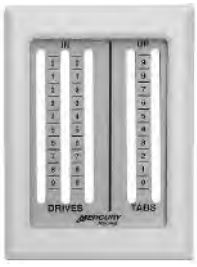

845457A 6

5 pointer. Bottom cable entry. White faceplate and bezel.
Fits triple MCM sterndrives and twin trim tabs.

MECHANICAL TRIM POSITION INDICATOR ACTUATOR KITS

ACTUATOR KIT



846063A 1

Single
Fits MCM Alpha - V SSM sterndrives

CABLE GRIP KIT



846066A 1

Angled stainless steel through-transom fitting for trim position (cable not included).

CABLE GRIP KIT



846793A 1

Straight stainless steel through-transom fitting for trim position (cable not included).

MECHANICAL TRIM POSITION INDICATOR & BEZEL CHART

Trim Position Indicators

Model	Model Note	Black Bezel Gray Faceplate Bottom Cable Entry	White Bezel White Faceplate Bottom Cable Entry	Black Bezel Gray Faceplate Top Cable Entry	White Bezel White Faceplate Top Cable Entry
1 pointer	1 sterndrive or 1 paralift		848444A 6	848445A 1	848445A 6
2 pointer	2 MCM Alpha - V SSM sterndrives or 2 trim tabs		845314A 6	845313A 1	845313A 6
2 pointer	2 MCM VI - VII SSM sterndrives or 2 trim tabs	845313A 1	845313A 6		845314A 6
3 pointer	3 MCM Alpha - V SSM sterndrives	N.L.A.	845765A 6		845766A 6
3 pointer	3 MCM VI - VII SSM sterndrives or 1 MCM sterndrive		845766A 6	N.L.A.	845765A 6
4 pointer	2 MCM Alpha - V SSM sterndrives and 2 trim tabs	844945A 1	844945A 6	844944A 1	844944A 6
4 pointer	2 MCM VI - VII SSM sterndrives and 2 trim tabs or	845983A 1	845983A 6	N.L.A.	N.L.A.
5 pointer	3 MCM Alpha - V SSM sterndrives and 2 trim tabs	845457A 1	845457A 6	N.L.A.	N.L.A.
5 pointer	3 MCM VI - VII SSM sterndrives and 2 trim tabs or	N.L.A.	N.L.A.	N.L.A.	N.L.A.

DIGITAL THROTTLE AND SHIFT REMOTE CONTROLS

CONTROLS-PANEL

PANEL MOUNT CONTROL-DTS (CHROME)



892984A01

The Panel Mount control features a chrome handle and incorporates start/stop and a throttle button in the grip. It also includes a built-in lanyard switch with cord and mounting hardware.

This control is designed for 2007 DTS engines and newer.

PANEL MOUNT CONTROL- DTS (BLACK)



892984A02

The Panel Mount control features a black handle and incorporates start/stop and a throttle button in the grip. It also includes a built-in lanyard switch with cord and mounting hardware.

This control is designed for 2007 DTS engines and newer.

BEZEL KIT



880861A 1

Woodgrain bezel

Fits all DTS and MPC 4000 panel mount remote controls.
Pistol Grip two piece design and all side mount DTS controls.

BEZEL KIT



880861A 2

Burlwood Gold woodgrain bezel

Fits all DTS and MPC 4000 panel mount remote controls.
Pistol Grip two piece design and all side mount DTS controls.

FOOT THROTTLE CONTROL

DTS HOT FOOT



893359K03

This feature allows for precise throttle control with a foot pedal. The use of the Hot Foot floor mounted foot throttle will allow the driver to operate with both hands on the steering wheel while operating the throttle with the Hot Foot.

SWITCH KIT- ON / OFF KIT



898259K01

This switch will allow you to turn the foot throttle on or off and has a light that will advise if it is on. The kit snaps into the current DTS Panel Mount controls.

This switch kit is designed for 2007 DTS applications and newer. To backfit to 2006 engines a DTS Command Module Harness is needed.

CONTROLS-CONSOLE-SINGLE

SLIM BINACLE CONTROL WITH NO TRIM



8M0079290

The single engine DTS Electronic Remote Control (ERC) features include: Start stop button, Dock mode button, Helm transfer button, Throttle only function button and a Mercury global dimming button.

This control is designed for 2007 DTS engines and newer. This control is a non-trim control.

DTS-SLIM CONSOLE-SINGLE-TRIM



8M0079291

The single engine DTS Electronic Remote Control (ERC) features include: Start stop button, Dock mode button, Helm transfer button, Throttle only function button and a Mercury global dimming button.

This control is designed for 2007 DTS engines and newer.

CONTROLS-CONSOLE DUAL

DTS CONSOLE - DUAL - NON TRIM



8M0079286

The DTS dual handle Electronic Remote Control (ERC) features include: Throttle only button, Dock mode button, 1 Lever Mode button, Helm transfer button, Sync button, Mercury global dimming, individual engine trim buttons on the pad and a Neutral indicator light.
This control is a non-trim control.

This control is designed for 2007 DTS engines and newer. Dual engine application.

DTS CONSOLE - DUAL - W/TRIM



8M0096751

The DTS dual handle Electronic Remote Control (ERC) features include: Throttle only button, Dock mode button, 1 Lever Mode button, Helm transfer button, Sync button, Mercury global dimming, individual engine trim buttons on the pad and a and Neutral indicator light. This control also features a Trim-all engine function which is located on the port handle.

This control is designed for 2007 DTS engines and newer. Dual engine application.

TRIPLE/ QUAD- CONTROLS

DTS CONSOLE - TRIPLE - W/TRIM



8M0096752

The DTS dual handle Electronic Remote Control (ERC) features include: Throttle only button, Dock mode button, 1 Lever Mode button, Helm transfer button, Sync button, Mercury global dimming, individual engine trim buttons on the pad and a and Neutral indicator light. This control also features a Trim-all engine function which is located on the port handle.

This control is designed for 2007 DTS engines and newer. Triple engine application.

DTS CONSOLE - QUAD - W/TRIM



8M0096753

The DTS dual handle Electronic Remote Control (ERC) features include: Throttle only button, Dock mode button, 1 Lever Mode button, Helm transfer button, Sync button, Mercury global dimming, individual engine trim buttons on the pad and a and Neutral indicator light. This control also features a Trim-all engine function which is located on the port handle.

This control is designed for 2007 DTS engines and newer. Quad engine application.

CONTROLS-YACHT

DTS YACHT CONTROL- DUAL ENGINES



889231A01

This Yacht control allows both throttle and shifting from single handles for dual engine installations. The control features includes: Throttle only button, Dock mode button, 1 Lever Mode button, Helm transfer button, and a Sync button.

This control is designed for 2007 DTS engines and newer.

DTS YACHT CONTROL THROTTLE/THROTTLE



889231A04

This Yacht control features 2 Throttle/Throttle levers to be used in conjunction with Yacht control - Shift/Shift levers.

This control is designed for 2007 DTS engines and newer.

DTS YACHT CONTROL SHIFT/SHIFT

889231A05

This Yacht control features 2 Shift/Shift levers to be used in conjunction with Yacht control - Throttle/Throttle levers.

This control is designed for 2007 DTS engines and newer.

SPORTFISH CONTROL



877775A26

The Sport Fish control is ideal for center console applications. This control allows side mounting of the control onto the helm.

This control is designed for 2007 DTS engines and newer.

DTS TRACK PADS

DASH MOUNTED CAN TRACK PAD



87-889305T01

Dash mounted Can track pad that allows all the functions that are present with the controls but mounted on the dash. Ideal for use with Yacht controls. Track pad functions include Warm Up, Dock, 1 Lever Mode, Helm Transfer, Sync, Troll, Neutral Indicator and + and - for user control

Gen I (2007) DTS engines and newer

CONSOLE MOUNTED CAN TRACK PAD

87-899178T01

Gen I (2007) and newer

REMOTE DASH PAD-SMARTTOW



87-889305T02

Remote Dash Pad provides a solution for hard-to-reach gauge installations by allowing the user to remotely navigate between VesselView, SC1000 Tach, SC1000 Speed, and new MercMonitor gauges. For tow sport applications, the pad also allows direct access to SmartTow® functionality by providing a dedicated On/Off button.

Navigate seamlessly between SC1000 Tach & Speed,VesselView and MercMonitor.

ZERO EFFORT CONTROLS

ZERO EFFORT DIGITAL CONTROL



8M0030501

Top mounted 2 lever digital throttle and shift (DTS) remote control. 1 shift lever (black knob) and 1 throttle lever (red knob).

For use with Race outboards and stern drive engines equipped with DTS.

ZERO EFFORT DIGITAL CONTROL



8M0085477

Top mounted 2 lever digital throttle/throttle remote control. Both levers have red knobs. Starboard mount.

For use with Race outboards and stern drive engines equipped with DTS (digital throttle and shift).

ZERO EFFORT DIGITAL CONTROL



8M0085481

Top mounted 2 lever digital shift/shift remote control. Both levers have black knobs. Port mount.

For use with Race outboards and stern drive engines equipped with DTS (digital throttle and shift).

ZERO EFFORT DIGITAL CONTROL



8M0085611

Top mounted 2 lever digital throttle and shift (DTS) remote control. Lever knobs are clear anodized.

For use with Race outboards and stern drive engines equipped with DTS.

ZERO EFFORT DIGITAL CONTROL



8M0085613

Top mounted 2 lever digital throttle/throttle remote control. Lever knobs are clear anodized. Starboard mount.

For use with Race outboards and stern drive engines equipped with DTS (digital throttle and shift).

ZERO EFFORT DIGITAL CONTROL



8M0085615

Top mounted 2 lever digital shift/shift remote control. Lever knobs are clear anodized. Port mount.

For use with Race outboards and stern drive engines equipped with DTS (digital throttle and shift).

ZERO EFFORT DIGITAL CONTROL

8M0095632

Top mount 2 lever digital throttle and shift (DTS) remote control. Shift and throttle configuration. Shift lever has black knob and throttle lever has red knob. Port mount.

For use with Race outboards and stern drive engines equipped with DTS.

8M0095633

Top mount 2 lever digital throttle and shift (DTS) remote control. Shift and throttle configuration. All lever knobs are clear anodized. Port mount.

For use with Race outboards and stern drive engines equipped with DTS.

ZERO EFFORT DIGITAL CONTROL



8M0030499

Top mounted 4 lever digital throttle and shift (DTS) remote control. Shift/shift/throttle/throttle configuration. Shift levers have black knobs and throttle levers have red knobs. Starboard mount.

For use with Race outboards and stern drive engines equipped with DTS.

ZERO EFFORT DIGITAL CONTROL



8M0085491

Top mounted 4 lever digital throttle and shift (DTS) remote control. Shift/throttle/throttle/shift configuration. Shift levers have black knobs and throttle levers have red knobs. Starboard mount.

ZERO EFFORT DIGITAL CONTROL



8M0085617

Top mounted 4 lever digital throttle and shift (DTS) remote control. Shift/shift/throttle/throttle configuration. All lever knobs are clear anodized. Starboard mount.

For use with Race outboards and stern drive engines equipped with DTS.

ZERO EFFORT DIGITAL CONTROL



8M0085619

Top mounted 4 lever digital throttle and shift (DTS) remote control. Shift/throttle/throttle/shift configuration. All lever knobs are clear anodized. Starboard mount.

For use with Race outboards and stern drive engines equipped with DTS.

ZERO EFFORT DIGITAL CONTROL



8M0085804

Top mounted 4 lever digital throttle and shift (DTS) remote control. Throttle/throttle/shift/shift configuration. Shift levers have black knobs and throttle levers have red knobs. Starboard mount.

For use with Race outboards and stern drive engines equipped with DTS.

ZERO EFFORT DIGITAL CONTROL



8M0085806

Top mounted 4 lever digital throttle and shift (DTS) remote control. Throttle/throttle/shift/shift configuration. All lever knobs are clear anodized. Starboard mount.

For use with Race outboards and stern drive engines equipped with DTS.

ZERO EFFORT DIGITAL CONTROL



8M0092088

Top mount 4 lever digital throttle and shift (DTS) remote control. Shift/throttle/throttle/shift configuration. Shift levers have black knobs and throttle levers have red knobs. Port mount.

For use with Race outboards and stern drive engines equipped with DTS.

ZERO EFFORT DIGITAL CONTROL



8M0092091

Top mounted 4 lever digital throttle and shift (DTS) remote control. Shift/throttle/throttle/shift configuration. All lever knobs are clear anodized. Port mount.

For use with Race outboards and stern drive engines equipped with DTS.

HARNESS ASY-ZERO EFFORT 2 LEVER CONTROLS



84-891963A01

Included in all Zero Effort Control kits

2004 and newer Models

EXTENSION HARNESS



84-8M8026041

7 ft. wiring extension harness for shift function. Labeled lever 1.

For use with Race DTS (digital throttle and shift) 14 pin data harnesses.

EXTENSION HARNESS



84-8M8026042

7 ft. wiring extension harness for shift function. Labeled lever 2.
For use with Race DTS (digital throttle and shift) 14 pin data harnesses.

EXTENSION HARNESS



84-8M8026043

7 ft. length wiring extension harness for throttle function. Labeled lever 3.
For use with Race DTS (digital throttle and shift) 14 pin data harnesses.

EXTENSION HARNESS



84-8M8026044

7 ft. length wiring extension harness for throttle function. Labeled lever 4.
For use with Race DTS (digital throttle and shift) 14 pin data harnesses.

MECHANICAL REMOTE CONTROLS

REMOTE CONTROL CHART

Compatibility of various series remote controls to engine models is indicated in the following chart.

Remote Control Application

Model	Country	Serial # Range	Commander Two Lever	Commander 3000 Series	MSC 4000 Series	MPC 4000 Series	MCC 4500 Series	F5H Series	Sport Jet	Zero Effort
Mercury/Mariner 4/5	USA	0A809601 and up	-		X	X	X	-	-	-
	BEL	9477830 and up								
Mercury/Mariner 20/25	USA	6443973 - 0G044026	-		X	X	X	-	-	-
	BEL	9415103 - 9807908								
Force Outboards (1992 & Prior)			-		-	-	-	X	-	-
Mercury/Mariner/Force (Current)			X	X	X	X	X	X	-	X
MerCruiser (MCM & MIE)			X	X	-	X	X	-	-	X
Sport Jet		0E023150 and up	-		-	-	-	-	X	-

MPC 4000 PANEL MOUNT REMOTE CONTROLS (GEN II)

The Panel Mount Controls are applicable for outboard and MCM/MIE engines. The handle is designed to provide optimal ergonomic use while the best-in-class mechanics offer smooth operation, improved responsiveness and increased strength. All panel mount controls have an integral lanyard stop switch which is sealed for water resistance. The power trim models incorporate a single rocker type trim switch in handle for ease of operation.
These controls are mounted on starboard side only.

MPC PANEL-GEN II- FINGER RELEASE-O/B



8M0011213

The Panel Mount control features a black handle and comes with a 4ft. (1.22 m) trim harness with the 3 pin molex connector. All installations require a separate Ignition/Choke assembly and T/S cables to complete the installation. The neutral safety switch leads are 6.5 ft.(1.98 m)and have a bullet connector on the ends. The lanyard switch leads also have bullet style connector ends.

The control fits all current Mercury/Mariner outboards (with integral trim) and 1993 and newer Force outboards 40 HP and higher utilizing Mercury style cables (with power trim).
The control uses GEN II T/S cables.
When used with Model Year 2005 8/9.9 FourStroke engines GEN II/SAE T/S cables must be used.

Mercury Branded

MPC PANEL-GEN II- FINGER RELEASE-MCM/MIE



8M0011214

The Panel Mount control features a black handle and comes with a 4ft. (1.22 m) trim harness with the 3 pin molex connector. All installations require a separate Ignition/Choke assembly and T/S cables to complete the installation. The neutral safety switch leads are 6.5 ft. (1.98 m) and have a bullet connector on the ends. The lanyard switch leads also have bullet style connector ends.

Fits all current Mercury/Mariner outboards (with integral trim) and 1993 and newer Force outboards 40 HP and higher utilizing Mercury style cables (with power trim). The controls use GEN II T/S cables.
When used with Model Year 2005 8/9.9 FourStroke engines GEN II/SAE T/S cables must be used.

Mercury Branded

MECHANICAL REMOTE CONTROLS

MPC PANEL-GEN II- FINGER RELEASE-O/B NO TRIM



8M0011212

The Panel Mount control features a black handle and is designed for outboard engines w/o power trim. All installations require a separate Ignition/Choke assembly and T/S cables to complete the installation. The power trim adapter harness is included to convert 3 pin molex connector to the traditional 3 blade Mercury connector. The neutral safety switch leads are 6.5 ft. (1.98 m) long and have bullet connectors on the ends. The lanyard switch leads also have bullet connectors on the ends.

Used on Outboard engines only - Non Trim versions
The control must use GEN II T/S cables.
When used with the Model Year 2005 8/9.9 FourStroke, GEN II/SAE T/S cable must be used.

MPC PANEL-GEN II- FINGER RELEASE-MCM/MIE NO TRIM

8M0011215

The Panel Mount control features a black handle and is designed for MCM/MIE engines w/o power trim. All installations require a separate Ignition/Choke assembly and T/S cables to complete the installation. The power trim adapter harness is included to convert 3 pin molex connector to the traditional 3 blade Mercury connector. The neutral safety switch leads are 6.5 ft. (1.98 m) long and have bullet connectors on the ends. The lanyard switch leads also have bullet connectors on the ends.

This control is designed for MIE and MCM engines.
The control must use GEN II T/S cables.

Mercury Branded

MPC PANEL-GEN II- FINGER RELEASE-O/B (CHROME)



8M0030550

The Panel Mount control features a chrome handle and comes with a 4ft. (1.22 m) trim harness with the 3 pin molex connector. All installations require a separate Ignition/Choke assembly and T/S cables to complete the installation. The neutral safety switch leads are 6.5 ft. (1.98 m) and have a bullet connector on the ends. The lanyard switch leads also have bullet style connector ends.

The control fits all current Mercury/Mariner outboards (with integral trim) and 1993 and newer Force outboards 40 HP and higher utilizing Mercury style cables (with power trim).
The control uses GEN II T/S cables.
When used with Model Year 2005 8/9.9 FourStroke engines GEN II/SAE T/S cable must be used.

Mercury Branded

MPC PANEL-GEN II- FINGER RELEASE-MCM (CHROME)



8M0030551

The Panel Mount control features a chrome handle and comes with a 4ft. (1.22 m) trim harness with the 4 pin molex connector. All installations require a separate Ignition/Choke assembly and T/S cables to complete the installation. The neutral safety switch leads are 6.5 ft. (1.98 m) and have a bullet connector on the ends. The lanyard switch leads also have bullet style connector ends.

Fits all current Mercury/Mariner outboards (with integral trim) and 1993 and newer Force outboards 40 hp and higher utilizing Mercury style cables (with power trim).
The controls use GEN II T/S cables.
When used with Model Year 2005 8/9.9 FourStroke engines GEN II/SAE T/S cable must be used.

Mercury Branded

PANEL MOUNT REMOTE CONTROL-GEN II- LOCK BAR



883710A02

The Panel Mount control features a chrome handle and comes with a 4ft. (1.22 m) trim harness with the 3 pin molex connector. All installations require a separate Ignition/Choke assembly and T/S cables to complete the installation. The neutral safety switch leads are 6.5 ft. (1.98 m) and have a bullet connector on the ends. The lanyard switch leads also have bullet style connector ends.

The control fits all current Mercury/Mariner outboards (with integral trim) and 1993 and newer Force outboards 40 HP and higher utilizing Mercury style cables (with power trim).
The control uses GEN II T/S cables.
When used with Model Year 2005 8/9.9 FourStroke engines GEN II/SAE T/S cables must be used.

Mercury Branded

883710A03

The Panel Mount control features a chrome handle and comes with a 4ft. (1.22 m) trim harness with the 4 pin molex connector. All installations require a separate Ignition/Choke assembly and T/S cables to complete the installation. The neutral safety switch leads are 6.5 ft. (1.98 m) and have a bullet connector on the ends. The lanyard switch leads also have bullet style connector ends.

Fits all current Mercury/Mariner outboards (with integral trim) and 1993 and newer Force outboards 40 hp and higher utilizing Mercury style cables (with power trim).
The controls use GEN II T/S cables.
When used with Model Year 2005 8/9.9 FourStroke engines GEN II/SAE T/S cables must be used.

Mercury Branded

883710A01

The Panel Mount control features a chrome handle and is designed for outboard engines w/o power trim. All installations require a separate Ignition/Choke assembly and T/S cables to complete the installation. The power trim adapter harness is included to convert 3 pin molex connector to the traditional 3 blade Mercury connector. The neutral safety switch leads are 6.5 ft. (1.98 m) long and have bullet connectors on the ends. The lanyard switch leads also have bullet connectors on the ends.

Used on Outboard engines only - Non Trim versions.
The control uses GEN II T/S cables.
When used with Model Year 2005 8/9.9 FourStroke engines GEN II/SAE T/S cables must be used.

Mercury Branded

BEZEL KIT-CUSTOM UPGRADE



891648001

Woodgrain cover allows you to customize the look of your control. Snap out the black inner bezel and snap in the custom bezel to enrich the appearance of your control.

Use on 4000 Gen II Panel Mount controls- Lock Bar one piece design

BEZEL KIT-CUSTOM UPGRADE



891648002

Burlwood Gold Woodgrain cover allows you to customize the look of your control. Snap out the black inner bezel and snap in the custom bezel to enrich the appearance of your control.

Use on 4000 Gen II Panel Mount controls- Lock Bar one piece design

MCC 4500 CONSOLE MOUNT - SINGLE ENGINE (GEN II)

The single station console controls are applicable for outboard and MCM/MIE engines. The handle is designed to provide optimal ergonomic use while the best-in-class mechanics offer smooth operation, improved responsiveness and increased strength. The throttle only button is located at the base of handle.

CONSOLE MOUNT REMOTE CONTROL-GEN II



8M0060782

This control is designed for MIE inboards and outboards w/o power trim. All installations require an Ignition/Choke harness and T/S cables to complete the installation.

Fits MIE inboards and all current Mercury/Mariner outboards (without power trim) and 1993 and newer Force outboards 40 HP and higher utilizing Mercury style cables (without power trim).
8/9.9 FourStroke engines 2005 and newer will use GEN II/SAE Premium cables.
8/9.9 generation change above S/N OR192772 and 15/20 FourStroke will use Gen II T/S cables.

CONSOLE REMOTE CONTROL-GEN II-SINGLE



8M0059686

This control features a single trim switch in the port handle for trim and comes with the trim harness (attached to switch) with the white connector. All installations require an Ignition/Choke harness and T/S cables to complete the installation.

Fits all current Mercury/Mariner outboards (with integral trim) and 1993 and newer Force outboards 40 HP and higher utilizing Mercury style cables (with power trim).
8/9.9 FourStroke engines 2005 and newer and 8/9.9 generation change above S/N OR192772 and 15/20 FourStroke will use Gen II T/S Cable.

CONSOLE MOUNT REMOTE CONTROL-GEN II- W/O EXT



8M0060783

This control features a single trim switch in the port handle for trim and trailering and comes with the trim harness (attached to switch) with the white connector. All installations require an Ignition/Choke harness and T/S cables to complete the installation.

The control will need Power trim harness, 4 pin Molex connector) and a 4 pin Molex to the packard 3 pin P/T connector.
This control will use GEN II T/S cables.
Fits all MCM applications.

SPACER KIT FOR 4500 SINGLE CONTROLS



98-8M0075237

Allows the control to be raised approximately 2 inches for applications that require clearance with handle movement

Used only with newer 8M0059686, 8M0060783 and 8M0060782 single handle consoles

RETRO KIT FOR SINGLE CONSOLE CONTROLS



8M0061334

This kit allows you to convert the housing and bracket on the older single handle control.

Single Handle Console Conversion Kit for older version to look like 8M0059686, 8M0060783, 8M0060782 models.

MCC 4500 CONSOLE MOUNT - DUAL ENGINE (GEN II)

The single station dual handled console controls are applicable for outboard and MCM/MIE engines. The handles are designed to provide optimal ergonomic use while the best-in-class mechanics offer smooth operation, improved responsiveness and increased strength. The throttle only button is located at the base of the handle.

CONSOLE MOUNT REMOTE CONTROL-GEN II



8M0075244

This control is designed for dual MIE inboards & outboards w/o power trim. All installations require an Ignition/Choke assembly and T/S cables to complete the installation.

This control fits MIE inboards and all current Mercury/Mariner outboards(without power trim), and 1993 and newer Force outboards 40 HP and higher utilizing Mercury style cables (without power trim).

Must use Gen II T/S cables for the installation.

CONSOLE REMOTE CONTROL-GEN II-DUAL



8M0075245

This control features a single trim switch in the port handle for simultaneous dual engine trim and trailering. There are individual engine trim buttons in the cover. All installations require a Ignition/Choke assembly and T/S cables to complete the installation.

This control fits all current Mercury/Mariner outboards (with integral trim) and 1993 and newer Force outboards 40 HP and higher utilizing Mercury style cables (with power trim).
Must use GEN II T/S cables.

CONSOLE MOUNT REMOTE CONTROL-GEN II-W/O EXT



8M0075246

This control features a single trim switch in the port handle for simultaneous dual engine trim and trailering. There are individual trim buttons in the cover. All installations require T/S cables to complete the installation.

The control will need Power trim harness, 4 pin Molex connector to the Packard 3 pin connector.
This control will use GEN II T/S cables.
Fits all MCM applications.

SPACER KIT FOR 4500 DUAL CONTROLS



8M0085790

The spacer will raise the control approximately 2 in. for the applications that require clearance with handle movement.

Used only with 8M0075244, 8M0075245, 8M0075246 dual handle console controls.

RETRO KIT FOR DUAL CONSOLE CONTROLS

Image not Available.

8M0085733

This kit will allow you to convert the housing and bracket of older style dual consoles to resemble current dual console mount controls.

Dual Handle Conversion Kits for older version to look like 8M0075244, 8M0075245, 8M0075246 models.

MSC 4000 SIDE MOUNT - ELECTRIC, POWER TRIM

These controls provide a smooth shift/load feel and an improved aesthetics. The control utilizes a 14 pin connector wiring harness and lanyard stop switch. The power trim models incorporate a single rocker type trim/trailer switch in the handle.This control is not for use with engines that have counter rotating lower units. Older engines may require a harness adapter.

SIDE MOUNT REMOTE CONTROL-14 PIN



8M0083666

This control features a handle mounted power trim switch and a 15 ft. (4.58 m) harness with 14 pin Deutsch connector. The control will connect to the engine models below without the use of an adapter harness.

For 2006 and newer non DTS 25-300 HP Outboard engines.
GEN II cables must be used.

8M0083667

This control features a handle mounted power trim switch and a 20 ft. (6.1 m) harness with 14 pin Deutsch connector. The control will connect to the engine models below without the use of an adapter harness.

For 2006 and newer non DTS 25-300 HP Outboard engines.
GEN II cables must be used.

SIDE MOUNT REMOTE CONTROL-14 PIN (PORT SIDE MOUNT)



8M0053636

This side mount control is for mounting on the port side and controlling with the left hand. This control features a handle mounted power trim switch and 15ft.(4.58m) harness with 14 pin Deutsche connector.

For 2006 and newer non DTS 25-300 HP Outboard engines.
GEN I cables must be used.
No Adapter harness required.

SIDE MOUNT REMOTE CONTROL- 8 PIN TRADITIONAL



881170A15

This control features a handle mounted power trim switch, 15 ft. (4.58 m) harness, built-in warning horn and power trim leads for front mount switch.

Fits all current Mercury/Mariner outboards (with integral power trim) and 1993 and newer Force outboards 40 HP and higher utilizing Mercury style cables (with power trim). When used with MY2005 and newer 8/9.9/15/20 FourStroke outboards an adapter harness is required.
For MY2005 and newer 8/9.9 FourStroke outboards SAE T/S cables must be used.
GEN I cables must be used.

881170A20

This control features a handle mounted power trim switch, 20 ft. (6.1 m) harness, built-in warning horn and includes power trim leads for front mount switch.

Fits all current Mercury/Mariner outboards (with integral power trim) and 1993 and newer Force outboards 40 HP and higher utilizing Mercury style cables (with power trim). When used with MY2005 and newer 8/9.9, 15/20 FourStroke outboards an adapter harness is required.
For MY2005 and newer 8/9.9 FourStroke outboards SAE T/S cables must be used.
GEN I cables must be used.

SIDE MOUNT REMOTE CONTROL- 10 PIN AMP



881170A10

This control features a handle mounted power trim switch, 15 ft. (4.58 m) harness with Amp 10-pin connector. The control will connect to the engine models below without the use of an adapter.

Used on MY2005 and newer, 8/9.9, 15/20 FourStroke engines with electric start and power trim.
For MY2005 only 8/9.9 FourStroke outboards SAE T/S cables must be used.
For 8/9.9 FourStroke engines generation change above S/N OR192772 and 15/20 FourStroke engines will use GEN I cables.
GEN I cables must be used on other engines.

SIDE MOUNT REMOTE CONTROL

881170A11

This control features a handle mounted power trim switch, 20 ft. (6.1 m) harness with Amp 10-pin connector. The control will connect to the engine models below without the use of an adapter harness.

Used on MY2005 and newer, 8/9.9, 15/20 FourStroke engines with electric start and power trim.
For MY2005 and newer 8/9.9 FourStroke outboards SAE T/S cables must be used.
For 8/9.9 FourStroke engines generation change above S/N OR192772 and 15/20 FourStroke engines will use GEN I cables.
GEN I cables must be used on other engines.

REMOTE CONTROL ADAPTER HARNESS



84-892473A01

Converts the traditional Mercury connector to an Amp 8-pin connector.
Converts side mount controls 881170A 3, 15, 16 and the 816626A_ series ignition keyswitch harness to connect to the MY2005 and newer 8/9.9 hp. FourStroke outboard.

MY2005 and newer 8/9.9 hp. FourStroke outboard and the 15/20 hp. FourStroke (351cc) outboard when a 8 pin side mount control or keyswitch harness is used.

HARNESS EXTENSION- 10 PIN



84-8M0058668

This harness extension will allow you to increase the length by 6 feet of the 10 pin drop for instruments. The extension will work with Side Mount controls as well as any 896537 series main engine / boat harness.

MSC 4000 SIDE MOUNT - ELECT, NON-POWER TRIM

The 8M0083860 is not "push to choke" and has a 14 pin connector wiring harness, lanyard stop, throttle only feature. This control also requires Gen II throttle and shift cables, is starboard mounted and not stackable.
The remainder of controls 881170A3, 881170A5, 881170A7, 881170A12 can be mounted starboard or port side and are stackable. They offer "push to choke" ignition switch, 8 pin connector wiring harness, lanyard stop switch, separate neutral warm-up lever and requires Gen I throttle and shift cables. All controls have a 5 pin accessory plug for tachometer and an adjustable throttle friction. These controls are not for use with engines that have counter rotating lower units. Older engines may require an adapter harness.

SIDE MOUNT REMOTE CONTROL- 14 PIN



8M0083860

This control features non - power trim and a 15ft. (4.58m) harness with 14 pin Deutsch connector.

Fits all current Mercury/Mariner Outboards 6 HP and above (without power trim), and 1993 and newer Force Outboards 40 HP and higher utilizing Mercury cables (without power trim).
When used with a MY2005 and newer 8/9.9, 15/20 FourStroke Outboard an Adapter harness is required.
Gen II cable must be used.

SIDE MOUNT REMOTE CONTROL



881170A 3

This control features a non-power trim handle, 15 ft.(4.58 m) harness and built-in warning horn.

Fits all current Mercury/Mariner Outboards 6 HP and above (without power trim) and 1993 and newer Force Outboards 40 HP and higher utilizing Mercury style cables (with power trim).
For MY2005 and newer 8/9.9 FourStroke Outboards SAE T/S cables must be used.
For 8/9.9 FourStroke engines generation change above S/N OR192772 and 15/20 FourStroke engines will use GEN I cables.
When used with a MY2005 and newer 8/9.9, 15/20 FourStroke Outboard an Adapter harness is required.
GEN I cables must be used on other engines.

881170A 5

This control features a non - powered trim handle with a 15 ft.(4.58 m) harness. This control does not have a warning horn and features push throttle cable operation.

Fits Mercury/Mariner Outboards 20/25 HP (U.S. S/N 0G044026 and below; Belgium S/N 9807908 and below).
GEN I cables must be used.

SIDE MOUNT REMOTE CONTROL



881170A 7

This control features a non - power trim handle with a 15 ft.(4.58 m) harness. This control does not have a warning horn.

Fits Mariner 30 to 55 HP (Japanese origin) except 30/40 HP (2 cyl.) with integral oil injection.
GEN I cables must be used.

SIDE MOUNT REMOTE CONTROL



881170A12

This control features a non - trim handle and a 15 ft. (4.58 M) harness with Amp connector and will direct connect to the engine models below without the use of an Adapter harness.

For MY2005 and newer, 8/9.9, 15/20 HP FourStroke Outboards with electric start and non-trim.
For MY2005 and newer 8/9.9 FourStroke Outboards SAE T/S cables must be used.
For 8/9.9 FourStroke engines generation change above S/N OR192772 and 15/20 FourStroke engines will use GEN I cables.
GEN I cables must be used on other engines.

MSC 4000 SIDE MOUNT - MANUAL START, W/ SWITCH

These controls are for Outboard engines and can be mounted on the Port or Starboard side. These controls feature an ignition stop switch and lanyard stop switch only.

SIDE MOUNT REMOTE CONTROL



881170A 4

This control is for manual start models and has a 20 ft.(6.1 m) harness. The control features a Toggle switch for remote shut off of the engine.

Fits current pull style throttle, manual start Mercury/Mariner 6/25 HP, 30/40 HP (2 cyl.- U.S. origin), 40 (3 & 4 cyl.) to 45 HP, 8/9.9, 15/20 HP FourStroke models (1996 and newer), and Force 25 HP (3 cyl.)
For MY2005 and newer 8/9.9 FourStroke Outboards SAE T/S cables must be used.
For 8/9.9 FourStroke engines generation change above S/N OR192772 and 15/20 FourStroke engines will use GEN I cables.
GEN I cables must be used on other engines.

881170A 6

This control is for manual start models and has a 20 ft.(6.1 m) harness. This control features a push throttle cable operation and a Toggle switch for remote shut off of the engine.

Fits older push style throttle Mercury/Mariner 20/25 HP (U.S. S/N 0G044026 and below; Belgium S/N 9807908 and below) and Force 9.9/15 HP (1997 and older).

MSC 4000 SIDE MOUNT - MANUAL START W/ NO SWITCH

These controls are for Outboard engines and can be mounted on the Port or Starboard side. The controls do not include switches or harness.

SIDE MOUNT REMOTE CONTROL



881170A 8

This control is for manual start models.

Fits Mercury/Mariner 4/5 HP and Mariner 8/55 HP (2 cyl.)
GEN I cables must be used.

MSC 4000 SIDE MOUNT - ACCESSORIES

DUAL ENGINE MOUNT KIT



16909A 2

This kit contains all necessary hardware for mounting or stacking two controls together for dual engine installations.

REMOTE CONTROL SPACER PLATE



17063T

Included with Commander 2000/MSC 4000 side mount control. Generally, one spacer is adequate for most installations: however, two or more can be stacked to provide additional side clearance. Measures 1/2 in.(13 mm) thick.

REMOTE CONTROL SPACER PLATE

Image not Available.

8M0114782

Spacer is included with the side mount control and is adequate for most installations, but an additional spacer may be needed to provide additional clearance.

Spacer kit is used with side mount controls 8M0083666, 8M0083667 and 8M0083860 only.

COMMANDER SERIES CONSOLE MOUNT - SINGLE ENGINE

The control has an adjustable throttle friction and neutral detent. Power trim models incorporate a single toggle type trim switch in handle and trim harness.

CONSOLE MOUNT REMOTE CONTROL



88688A25

Comes with 4 ft.(1.22 m) trim harness. All installations require a separate Ignition/ Choke assembly and Throttle/Shift Cables to complete the installation. Ref throttle/ shift cables 897977A__ (adapter for 3 pin P/T - 84-898286T01)

Fits all current Mercury / Mariner outboards (with integral power trim), and 1993 and newer Force outboards 40 hp and higher utilizing Mercury style cables (with power trim).

CONSOLE MOUNT REMOTE CONTROL



88688A26

Comes with 20 ft.(6.1 m) trim harness and trailer switch. All installations require a separate Ignition Switch and Throttle/Shift Cables to complete the installation. Ref throttle/shift cables 897977A__

Fits all MCM/MIE and Mercury/Mariner 3.4L outboards with external trim cylinders.

CONSOLE MOUNT REMOTE CONTROL



88688A27

For non-power trim models. All installations require a separate Ignition/Choke assembly and Throttle/Shift Cables to complete the installation. Ref throttle/shift cables 897977A__

Fits all current Mercury / Mariner outboards (without power trim), and 1993 and newer Force outboards 40 hp and higher utilizing Mercury style cables (without power trim).

COMMANDER SERIES CONSOLE MOUNT - DUAL ENGINE

The control has an adjustable throttle friction and neutral detent.

CONSOLE MOUNT REMOTE CONTROL



88688A22

Comes with 4 ft.(1.22 m) trim harness. All installations require a separate Ignition/ Choke assembly and Throttle/Shift Cables to complete the installation. Ref throttle/ shift cables 897977A__

Fits all current Mercury / Mariner outboards (with integral power trim), and 1993 and newer Force outboards 40 hp and higher utilizing Mercury style cables (with power trim).

CONSOLE MOUNT REMOTE CONTROL



88688A23

Comes with 20 ft.(6.1 m) trim harness and trailer switch. All installations require a separate Ignition Switch and Throttle/Shift Cables to complete the installation. Ref throttle/shift cables 897977A__

Fits all MCM/MIE and Mercury/Mariner 3.4L outboards with external trim cylinders.

Mercury Branded

CONSOLE MOUNT REMOTE CONTROL



88688A24

For non-power trim models. All installations require a separate Ignition/Choke assembly and Throttle/Shift Cables to complete the installation. Ref throttle/shift cables 897977A__

Fits all current Mercury / Mariner outboards (without power trim), and 1993 and newer Force outboards 40 hp and higher utilizing Mercury style cables (without power trim).

JET DRIVE REMOTE CONTROLS

Must be used with Sport Jet due to the design of the jet drive. This is due to strength and mounting requirements. Any substitutions must meet ABYC/Coast Guard standards for mini jet boats.

SIDE MOUNT REMOTE CONTROL



802755

Forward or aft cable entry. Accepts 40 series shift cables.

Fits Sport-Jet 175 and may be used on 90/95/120 applications with Remote Control Conversion Kit 850698A 1. Also fits 200 OptiMax, 210 & 240 EFI Jet Drives.

REMOTE CONTROL CONVERSION KIT



850698A 1

Allows the use of remote control 802755 and 40 series shift cables 853951A__ to be used on Sport-Jet 90/95/120 applications.

ZERO EFFORT REMOTE CONTROLS

Starboard mounted FWD CANT controls can be rotated 180 degrees and installed in port mounted AFT CANT configuration. Likewise, starboard mounted AFT CANT controls can be rotated 180 degrees and installed in port mounted FWD CANT configuration. All controls with shift levers include a neutral safety switch for start in gear protection. Controls with trim switch are for starboard installation only. All levers are listed in left to right configurations. Order F5H208/__ or 64-820676A__ series cables separately.

ZERO EFFORT CONTROL

844461A30

1 throttle lever/ Black/ FWD CANT (no trim)

Fits Mercury/Mariner and MCM/MIE.

844461A50

1 throttle lever/ White/ FWD CANT (no trim)

Fits Mercury/Mariner and MCM/MIE.

844629A30

1 shift lever/ Black/ FWD CANT (no trim)

Fits Mercury/Mariner and MCM/MIE.

ZERO EFFORT CONTROL



844629A50

1 shift lever/ White/ FWD CANT (no trim)

Fits Mercury/Mariner and MCM/MIE.

ZERO EFFORT CONTROL

844461A60

1 throttle lever/ Black/ FWD CANT (w/ trim)

Fits Mercury/Mariner and MCM/MIE.

ZERO EFFORT CONTROL



844461A70

1 throttle lever/ White/ FWD CANT (w/ trim)

Fits Mercury/Mariner and MCM/MIE.

ZERO EFFORT CONTROL

844461A80

1 throttle lever/ Black/ AFT CANT (w/ trim)

Fits Mercury/Mariner and MCM/MIE.

844461A90

1 throttle lever/ White/ AFT CANT (w/ trim)

Fits Mercury/Mariner and MCM/MIE.

ZERO EFFORT CONTROL



844630A31

2 levers - 1 shift & 1 throttle/ Black/ FWD CANT (no trim)

Fits Mercury/Mariner and MCM/MIE.

ZERO EFFORT CONTROL



844630A51

2 levers - 1 shift & 1 throttle/ White/ FWD CANT (no trim)
Fits Mercury/Mariner and MCM/MIE.

ZERO EFFORT CONTROL

844630A52

2 levers - 1 throttle & 1 shift/ White/ FWD CANT (no trim)
Fits Mercury/Mariner and MCM/MIE.

ZERO EFFORT CONTROL



844464A30

2 throttle levers / Black/ FWD CANT (no trim)
Fits Mercury/Mariner and MCM/MIE.

ZERO EFFORT CONTROL

844464A50

2 throttle levers / White/ FWD CANT (no trim)
Fits Mercury/Mariner and MCM/MIE.

ZERO EFFORT CONTROL



844631A30

2 shift levers / Black/ FWD CANT (no trim)
Fits Mercury/Mariner and MCM/MIE.

ZERO EFFORT CONTROL



844631A50

2 shift levers / White/ FWD CANT (no trim)
Fits Mercury/Mariner and MCM/MIE.

ZERO EFFORT CONTROL



844630A61

2 levers - 1 shift & 1 throttle/ Black/ FWD CANT (w/ trim)
Fits Mercury/Mariner and MCM/MIE.

ZERO EFFORT CONTROL



844630A71

2 levers - 1 shift & 1 throttle/ White/ FWD CANT (w/ trim)
Fits Mercury/Mariner and MCM/MIE.

ZERO EFFORT CONTROL

844630A81

2 levers - 1 shift & 1 throttle/ Black/ AFT CANT (w/ trim)
Fits Mercury/Mariner and MCM/MIE.

MECHANICAL REMOTE CONTROLS

ZERO EFFORT CONTROL



844630A91

2 levers - 1 shift & 1 throttle / White/ AFT CANT (w/ trim)
Fits Mercury/Mariner and MCM/MIE.

ZERO EFFORT CONTROL



844630A62

2 levers - 1 throttle & 1 shift/ Black/ FWD CANT (w/ trim)
Fits Mercury/Mariner and MCM/MIE.

ZERO EFFORT CONTROL



844630A72

2 levers - 1 throttle & 1 shift/ White/ FWD CANT (w/ trim)
Fits Mercury/Mariner and MCM/MIE.

ZERO EFFORT CONTROL

844630A82

2 levers - 1 throttle & 1 shift/ Black/ AFT CANT (w/ trim)
Fits Mercury/Mariner and MCM/MIE.

ZERO EFFORT CONTROL



844630A92

2 levers - 1 throttle & 1 shift/ White/ AFT CANT (w/ trim)
Fits Mercury/Mariner and MCM/MIE.

ZERO EFFORT CONTROL

844464A60

2 throttle levers / Black/ FWD CANT (w/ trim)
Fits Mercury/Mariner and MCM/MIE.

ZERO EFFORT CONTROL



844464A70

2 throttle levers / White/ FWD CANT (w/ trim)
Fits Mercury/Mariner and MCM/MIE.

ZERO EFFORT CONTROL

844464A80

2 throttle levers / Black/ AFT CANT (w/ trim)
Fits Mercury/Mariner and MCM/MIE.

ZERO EFFORT CONTROL



844464A90

2 throttle levers / White/ AFT CANT (w/ trim)
Fits Mercury/Mariner and MCM/MIE.

ZERO EFFORT CONTROL



844466A30
3 throttle levers / Black/ FWD CANT (no trim)
Fits Mercury/Mariner and MCM/MIE.

ZERO EFFORT CONTROL

844466A50
3 throttle levers / White/ FWD CANT (no trim)
Fits Mercury/Mariner and MCM/MIE.

844633A30
3 shift levers / Black/ FWD CANT (no trim)
Fits Mercury/Mariner and MCM/MIE.

ZERO EFFORT CONTROL



844466A60
3 throttle levers / Black/ FWD CANT (w/ trim)
Fits Mercury/Mariner and MCM/MIE.

ZERO EFFORT CONTROL



844466A70
3 throttle levers / White/ FWD CANT (w/ trim)
Fits Mercury/Mariner and MCM/MIE.

ZERO EFFORT CONTROL

844466A80
3 throttle levers / Black/ AFT CANT (w/ trim)
Fits Mercury/Mariner and MCM/MIE.

844466A90
3 throttle levers / White/ AFT CANT (w/ trim)
Fits Mercury/Mariner and MCM/MIE.

ZERO EFFORT CONTROL



844632A33
4 levers - 1 shift & 2 throttle & 1 shift/ Black/ FWD CANT (no trim)
Fits Mercury/Mariner and MCM/MIE.

ZERO EFFORT CONTROL

844632A53
4 levers - 1 shift & 2 throttle & 1 shift/ White/ FWD CANT (no trim)
Fits Mercury/Mariner and MCM/MIE.

ZERO EFFORT CONTROL



844632A31
4 levers - 2 shift & 2 throttle/ Black/ FWD CANT (no trim)
Fits Mercury/Mariner and MCM/MIE.

ZERO EFFORT CONTROL



844632A51
4 levers - 2 shift & 2 throttle/ White/ FWD CANT (no trim)
Fits Mercury/Mariner and MCM/MIE.

MECHANICAL REMOTE CONTROLS

ZERO EFFORT CONTROL



844632A32

4 levers - 2 throttle & 2 shift/ Black/ FWD CANT (no trim)
Fits Mercury/Mariner and MCM/MIE.

ZERO EFFORT CONTROL

844632A52

4 levers - 2 throttle levers & 2 shift levers/ White/ FWD CANT (no trim)
Fits Mercury/Mariner and MCM/MIE.

ZERO EFFORT CONTROL



844469A30

4 throttle levers/ Black/ FWD CANT (no trim)
Fits Mercury/Mariner and MCM/MIE.

ZERO EFFORT CONTROL

844469A50

4 throttle levers/ White/ FWD CANT (no trim)
Fits Mercury/Mariner and MCM/MIE.

ZERO EFFORT CONTROL



844635A30

4 shift levers/ Black/ FWD CANT (no trim)
Fits Mercury/Mariner and MCM/MIE.

ZERO EFFORT CONTROL

844635A50

4 shift levers/ White/ FWD CANT (no trim)
Fits Mercury/Mariner and MCM/MIE.

ZERO EFFORT CONTROL



844632A63

4 levers - 1 shift & 2 throttle & 1 shift/ Black/ FWD CANT (w/ trim)
Fits Mercury/Mariner and MCM/MIE.

ZERO EFFORT CONTROL



844632A73

4 levers - 1 shift & 2 throttle & 1 shift/ White/ FWD CANT (w/ trim)
Fits Mercury/Mariner and MCM/MIE.

ZERO EFFORT CONTROL

844632A83

4 levers - 1 shift & 2 throttle & 1 shift/ Black/ AFT CANT (w/ trim)
Fits Mercury/Mariner and MCM/MIE.

ZERO EFFORT CONTROL



844632A93

4 levers - 1 shift & 2 throttle & 1 shift/ White/ AFT CANT (w/ trim)
Fits Mercury/Mariner and MCM/MIE.

ZERO EFFORT CONTROL



844632A61

4 levers - 2 shift & 2 throttle/ Black/ FWD CANT (w/ trim)
Fits Mercury/Mariner and MCM/MIE.

ZERO EFFORT CONTROL



844632A71

4 levers - 2 Shift & 2 throttle/ White/ FWD CANT (w/ trim) Stbd
Fits Mercury/Mariner and MCM/MIE.

ZERO EFFORT CONTROL



844632A81

4 levers - 2 shift & 2 throttle/ Black/ AFT CANT (w/ trim)
Fits Mercury/Mariner and MCM/MIE.

ZERO EFFORT CONTROL



844632A91

4 levers - 2 Shift & 2 Throttle/ White/ AFT CANT (w/ trim)
Fits Mercury/Mariner and MCM/MIE.

ZERO EFFORT CONTROL



844632A62

4 levers - 2 throttle & 2 shift/ Black/ FWD CANT (w/ trim)
Fits Mercury/Mariner and MCM/MIE.

ZERO EFFORT CONTROL



844632A72

4 levers - 2 throttle & 2 shift/ White/ FWD CANT (w/ trim)
Fits Mercury/Mariner and MCM/MIE.

ZERO EFFORT CONTROL



844632A82

4 levers - 2 throttle & 2 shift/ Black/ AFT CANT (w/ trim)
Fits Mercury/Mariner and MCM/MIE.

ZERO EFFORT CONTROL

844632A92

4 levers - 2 throttle & 2 shift/ White/ AFT CANT (w/ trim)
Fits Mercury/Mariner and MCM/MIE.

844634A51

6 levers - 3 shift & 3 throttle/ White/ FWD CANT (no trim)
Fits Mercury/Mariner and MCM/MIE.

844634A52

6 levers - 3 throttle & 3 shift/ White/ FWD CANT (no trim)
Fits Mercury/Mariner and MCM/MIE.

MECHANICAL REMOTE CONTROLS

ZERO EFFORT CONTROL



844634A31
6 levers - 3 shift & 3 throttle/ Black/ FWD CANT (no trim)
Fits Mercury/Mariner and MCM/MIE.

ZERO EFFORT CONTROL



844634A32
6 levers - 3 throttle & 3 shift/ Black/ FWD CANT (no trim)
Fits Mercury/Mariner and MCM/MIE.

ZERO EFFORT CONTROL

844634A83
6 levers - 1 shift & 3 throttle & 2 shift/ Black/ AFT CANT (w/ trim)
Fits Mercury/Mariner and MCM/MIE.

844634A93
6 levers - 1 shift & 3 throttle & 2 shift/ White/ AFT CANT (w/ trim)
Fits Mercury/Mariner and MCM/MIE.

844634A64
6 levers - 2 shift & 3 throttle & 1 shift/ Black/ FWD CANT (w/ trim)
Fits Mercury/Mariner and MCM/MIE.

ZERO EFFORT CONTROL



844634A74
6 levers - 2 shift & 3 throttle & 1 shift/ White/ FWD CANT (w/ trim)
Fits Mercury/Mariner and MCM/MIE.

ZERO EFFORT CONTROL

844634A84
6 levers - 2 shift & 3 throttle & 1 shift/ Black/ AFT CANT (w/ trim)
Fits Mercury/Mariner and MCM/MIE.

844634A94
6 levers - 2 shift & 3 throttle & 1 shift/ White/ AFT CANT (w/ trim)
Fits Mercury/Mariner and MCM/MIE.

ZERO EFFORT CONTROL



844634A61
6 levers - 3 shift & 3 throttle/ Black/ FWD CANT (w/ trim)
Fits Mercury/Mariner and MCM/MIE.

ZERO EFFORT CONTROL

844634A71
6 levers - 3 shift & 3 throttle/ White/ FWD CANT (w/ trim)
Fits Mercury/Mariner and MCM/MIE.

844634A81
6 levers - 3 shift & 3 throttle/ Black/ AFT CANT (w/ trim)
Fits Mercury/Mariner and MCM/MIE.

844634A91
6 levers - 3 shift & 3 throttle/ White/ AFT CANT (w/ trim)
Fits Mercury/Mariner and MCM/MIE.

ZERO EFFORT CONTROL



844634A62
6 levers - 3 throttle & 3 shift/ Black/ FWD CANT (w/ trim)
Fits Mercury/Mariner and MCM/MIE.

ZERO EFFORT CONTROL

844634A72
6 levers - 3 throttle & 3 shift/ White/ FWD CANT (w/ trim)
Fits Mercury/Mariner and MCM/MIE.

844634A82
6 levers - 3 throttle & 3 shift/ Black/ AFT CANT (w/ trim)
Fits Mercury/Mariner and MCM/MIE.

844634A92
6 levers - 3 throttle & 3 shift/ White/ AFT CANT (w/ trim)
Fits Mercury/Mariner and MCM/MIE.

CONTROL LEVER W/ TRIM



848924A 5

Starboard mounted/ Black/ FWD CANT/ (w/ trim). Updates standard control to trim switch feature. Diode kit is needed when updating from controls with no trim switches, to levers with trim switches on multiple engine boats. See Diode Kits.

CONTROL LEVER W/ TRIM



848924A 6

Starboard mounted/ White/ FWD CANT/ (w/ trim). Updates standard control to trim switch feature. Diode kit is needed when updating from controls with no trim switches, to levers with trim switches on multiple engine boats. See Diode Kits.

CONTROL LEVER W/ TRIM



848924A 7

Starboard mounted/ Black/ AFT CANT/ (w/ trim). Updates standard control to trim switch feature. Diode kit is needed when updating from controls with no trim switches, to levers with trim switches on multiple engine boats. See Diode Kits.

CONTROL LEVER W/ TRIM



848924A 8

Starboard mounted/ White/ AFT CANT/ (w/ trim). Updates standard control to trim switch feature. Diode kit is needed when updating from controls with no trim switches, to levers with trim switches on multiple engine boats. See Diode Kits.

DIODE KIT



812497T03

Prevents feedback in the down trim circuits between multiple engines. Also need to order Diode Kit 812497A 4.

Required and only used on boats with "dual" engines when updating zero effort control levers without trim switches to levers with trim switches.

DIODE KIT



812497A 4

Prevents feedback in the up trim circuits between multiple engines. Also need to order Diode Kit 812497A 3.

Required and only used on boats with "dual" engines when updating zero effort control levers without trim switches to levers with trim switches.

DIODE KIT



812497A 5

Prevents feedback in the down trim circuits between multiple engines. Also need to order Diode Kit 812497A 6.

Required and only used on boats with "triple" engines when updating zero effort control levers without trim switches to levers with trim switches.

MECHANICAL REMOTE CONTROLS

DIODE KIT



812497A 6

Prevents feedback in the up trim circuits between multiple engines. Also need to order Diode Kit 812497A 5.

Required and only used on boats with "triple" engines when updating zero effort control levers without trim switches to levers with trim switches.

REMOTE CONTROL CONVERSION KITS

REMOTE CONTROL CONVERSION KIT



895284A01

Converts an electric start tiller handle outboard to an electric start remote throttle and shift operation. Suitable controls, throttle/shift cables and keyswitch harnessing are additionally required. The appropriate carburetor and the steering link rod attaching hardware are included in the kit.

Fits 9.9 hp. FourStroke, Model Year 2005-2006, both standard and BigFoot models requiring SAE ended throttle/shift cables. Serial Numbers JPN-0R042475-0R192771 & BEL-0P325500-0P513329.

REMOTE CONTROL CONVERSION KIT



895284A02

Converts a manual start tiller handle outboard to a manual start remote throttle and shift operation. Suitable controls, throttle/shift cables and stopswitch harnessing are additionally required. The steering link rod attaching hardware is included in the kit.

Fits 8/9.9 hp. FourStroke, Model Year 2005-2006, standard models requiring SAE ended throttle/shift cables. Serial Numbers JPN-0R042475-0R192771 & BEL-0P325500-0P513329.

REMOTE CONTROL CONVERSION KIT



889246A80

Converts an 8/9.9 hp. FourStroke MH (manual start tiller model) to a MRC (manual start remote control model).

Fits the 8/9.9 hp. FourStroke MH outboard, 209 cc., all calibrations requiring Mercury style ended throttle/shift cables.

REMOTE CONTROL CONVERSION KIT



889246A81

Converts a 9.9 hp. FourStroke EH (electric start tiller model) to a ERC (electric start remote control model). Remote controls and throttle/shift cables are required separate.

Fits the 9.9 hp. FourStroke EH outboard, 209 cc., EPA calibrations requiring Mercury style ended throttle/shift cables, JPN-0R192772 & newer.

REMOTE CONTROL CONVERSION KIT



889246A87

Converts a 9.9 hp. FourStroke EH (electric start tiller model) to a ERC (electric start remote control model). Remote controls and throttle/shift cables are required separate.

Fits the 9.9 hp. FourStroke EH outboard, 209 cc., EU calibrations requiring Mercury style ended throttle/shift cables, BEL-0P513330 & newer.

REMOTE CONTROL CONVERSION KIT



889246A33

Remote control and throttle/shift cables are required separate. This kit converts an EH (electric start tiller) to an ERC (electric start remote control).

Fits the 25-30 Hp EFI FourStroke Outboard, serial number 0R106999 & above.

REMOTE CONTROL CONVERSION KIT



889246A34

Remote control and throttle/shift cables are required separate. This kit converts an MH (manual start tiller) to an MRC (manual start remote control).

Fits the 25-30 Hp EFI FourStroke Outboard, serial number 0R106999 & above.

REMOTE CONTROL CONVERSION KIT



880095A08

Converts an electric start tiller model to an electric start remote model. Suitable remote controls are required separate.

Fits Mercury 40 hp (3 cylinder) FourStroke EFI outboards (CHN-1C049739 & above) and 40/50/60 hp (4 cylinder) FourStroke EFI outboards (CHN-1C050252 & above).

REMOTE CONTROL CONVERSION KIT



880095A11

Converts a 15 Hp. FourStroke outboard from an EH (electric tiller) model to an ERC (electric remote control) model. Remote controls, cables, etc. are not included in this kit. Power trim models require additional trim harness kit 84-856554A02.

Fits the 15 Hp. FourStroke EH outboard, 351cc., 0R235949 and above.

REMOTE CONTROL CONVERSION KIT



880095A12

Converts a 20 Hp. FourStroke outboard from an EH (electric tiller) model to an ERC (electric remote control) model. Remote controls, cables, etc. are not included in this kit. Power trim models require additional trim harness kit 84-856554A02.

Fits the 20 Hp. FourStroke EH outboard, 351cc., 0R235168 and above.

POWER TRIM HARNESS KIT



84-856554A02

Required to complete the conversion of the 15/20 Hp. FourStroke (351cc) outboard from a tiller handle power trim model to a remote controlled power trim model.

Fits the 15/20 Hp. FourStroke, 351cc., EHPT model outboard beginning with serial number 0R235168 and above.

REMOTE CONTROL CONVERSION KIT



803583A 4

Also requires the addition of an Electrical Harness 17162. This kit will not fit engines equipped with integral fuel tank assemblies.

Fits Mercury/Mariner 4/5/6 hp. FourStroke outboards with remote fuel tanks, serial number 0R000001-0R411837.

REMOTE CONTROL CONVERSION KIT

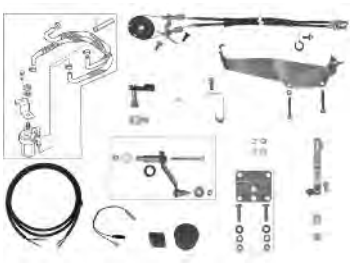

8M0062241

Also requires the addition of electric harness 17162.

Fits Mercury/Mariner 4/5/6 hp. FourStroke outboards, serial number 0R411838 and above.

MECHANICAL REMOTE CONTROLS

HARNESS ASSEMBLY



84- 17162

Required for the 4/5 hp. 4-Stroke along with the Attaching Kit. This kit will not fit engines equipped with integral fuel tank assemblies.

Fits Mercury/Mariner 4/5/6 hp. FourStroke outboards with remote fuel tanks.

REMOTE CONTROL ATTACHING KITS

REMOTE CONTROL ATTACHING KIT



16840A 2

Includes remote stop switch with 20 ft.(6.1 m) extension harness and remote steering bracket that adapts to either mechanical push-pull steering or cable and pulley steering.

Fits Mercury/Mariner 4 & 5 (2-Stroke).

REMOTE CONTROL ATTACHING KIT



42805A 6

Fits Mercury/Mariner 6/8/9.9 and 15 (U.S. origin).

REMOTE CONTROL ATTACHING KIT



856553A 2

Fits Mercury/Mariner 9.9 Hp FourStroke (323cc - USA 0G760300-1B226999, BEL 0P075166-0P400999) and 15 Hp FourStroke (323cc - USA 0G590000-1B727495).

REMOTE CONTROL ATTACHING KIT



826633A 1

For side shift or shift in handle models. Also requires the installation of Ride Guide Attaching Kit 41323A03. Electric start models will require installation of Remote Control Harness Assembly 95723A 4.

Fits Mercury/Mariner 20/25 (U.S. S/N 0G044027 and above; Belgium S/N 9807909 and above). This kit does NOT fit the 20 JET outboard.

REMOTE CONTROL ATTACHING KIT



859186A 1

Fits Mercury/Mariner 25 Hp Carb FourStroke outboard.

REMOTE CONTROL ATTACHING KIT



826557A 1

Fits Mercury/Mariner 30/40 (2-Stroke - 2 cyl. - U.S. origin)(1994 and newer)

REMOTE CONTROL ATTACHING KIT



859185A 1

Fits Mercury/Mariner 30/40 (4-Stroke), 3 cylinder, carbureted models through Model Year 2005, and fits the Mercury/Mariner 40 hp. (3 cyl.) FourStroke, Model Year 2006 carbureted models with short shaft and vertical shift.

REMOTE CONTROL ATTACHING KIT



859185A 2

Fits Mercury/Mariner 30/40 (4-Stroke), 3 cylinder, EFI models through Model Year 2005, and fits Mercury/Mariner 40 hp. (3 cyl.) FourStroke EFI models, Model Year 2006 with a short shaft and vertical shift.

REMOTE CONTROL ATTACHING KIT



859185A04

Fits the Mercury/Mariner 40 hp. (3 cyl.) FourStroke, Model Year 2006 EFI models with long shaft and rotary shift.

REMOTE CONTROL ATTACHING KIT



859219A 1

This kit should be used with a remote steering attaching kit to provide complete remote control operation.

Fits Mercury/Mariner 40 hp. (USA 0G531301 and Newer, BEL 9973100 and Newer) and 50 (USA 0G590000 and Newer, BEL 9973100 and Newer).

REMOTE CONTROL ATTACHING KIT



880093A 1

Fits 2001 and newer Mercury 40 hp 4-Stroke Bigfoot and 50/60 hp 4-Stroke Carb outboards (s/n 0T178500 and up).

REMOTE CONTROL ATTACHING KIT



880093A 2

Fits 2002-2006 Mercury 40 hp 4-Stroke Bigfoot and 50/60 hp 4-Stroke EFI outboards (USA-0T409000-1B344306, BEL-0P401000-0P515896, CHN-1C000001-1C050251).

OUTBOARD RIGGING HOSE KIT

Used to enclose remote harness, hoses, cables, etc. between engine cowl and boat transom.

RIGGING TUBE KIT



32-825191A03

Rigging Tube kit includes 5 ft length (2 in. dia. x 2.3 threads per inch) tube that screws into the fitting coming out of the Verado. If OptiMax engine, requires the use of the clamp to attach to fitting coming out of engine. Included in the kit is plastic transom fitting that screws to the tube and can be fastened to the boat.

2005 and newer Verado engines as well as all Opti Max engines

32-8M0088822

Rigging Tube kit includes 5 ft length (2 in. dia. x 2.3 threads per inch) tube that screws into the fitting coming out of the engine. Includes new grommet 8M0075942 that is used when installing rigging tubes. Remove existing grommet from cowl and replace with this grommet..

New 75-115 4 stroke

32-8M0062693

Rigging Tube kit includes 5 ft length (2 in. dia. x 2.3 threads per inch) tube that screws into the fitting coming out of the engine. Includes new grommet 8M0061160 that is used when installing rigging tubes. Remove existing grommet from cowl and replace with this grommet..

Used on 150 EFI 4-Stroke engine only

GROMMET - INGRESS



8M0062583

Special Grommet used with Rigging Kits

150 HP 4 Stroke only

MECHANICAL REMOTE CONTROLS

RIGGING HOSE



32-859055 5

Replacement Hose, 2 in. dia. x 2.3 threads per inch, furnished in a 5 ft. length.

Fits various Mercury / Mariner V-6 outboards. See application chart for specific engine models.

32-859055 50

Replacement Hose, furnished in a 50 ft. bulk length that can be cut to required length.

Fits various Mercury / Mariner V-6 outboards. See application chart for specific engine models.

Priced individually, sold @ multiples of 2

COWL FITTING



875266A 2

Used on engine end of rigging hose.

Fits various Mercury / Mariner V-6 outboards. Furnished standard with the engines beginning with model year 2,000. See application chart for specific engine models.

COWL FITTING



8M8027677

Used on engine end of rigging hose.

Fits various Mercury / Mariner V-6 outboards. Furnished standard with the engines beginning with model year 2,000.

RIGGING HOSE CHART

Mercury/Mariner Rigging Hoses

Model	Brand	Year Range	Country	Serial # Range	Rigging Hose Kit Part Number	Cowl Fitting Required
2.0L V-6	Mercury/Mariner	1996 - 1999	USA	0G303046 - 0G949999	32-825191A03	875266A 2
2.0L V-6	Mercury/Mariner	2000 - 2016	USA	0T065504 and up	32-825191A03	Incl. With Engine
2.5L V-6	Mercury/Mariner	1996 - 1999	USA	0G303046 - 0G949999	32-825191A03	875266A 2
2.5L V-6	Mercury/Mariner	2000 - 2016	USA	0T065504 and up	32-825191A03	Incl. With Engine
2.5L OPTIMAX	Mercury/Mariner	1998 - 1999	USA	0G590000 - 0G949999	32-825191A03	875266A 2
2.5L OPTIMAX	Mercury/Mariner	2000 - 2016	USA	0T065504 and up	32-825191A03	Incl. With Engine
3.0L V-6	Mercury/Mariner	1994 - 1999	USA	0D280813 - 0G949999	32-825191A03	875266A 2
3.0L V-6	Mercury/Mariner	2000 - 2016	USA	0T014000 and up	32-825191A03	Incl. With Engine
3.0L DFI	Mercury/Mariner	1997	USA	0G386496 - 0G589999	32-825191A03	875266A 2
3.0L OPTIMAX	Mercury/Mariner	1998 - 1999	USA	0G590000 - 0G949999	32-825191A03	8M8027677
3.0L OPTIMAX	Mercury/Mariner	2000 - 2016	USA	0T014000 and up	32-825191A03	Incl. With Engine
225 EFI FourStroke	Mercury/Mariner	2003 - 2016	USA	0T635945 and up	32-825191A03	Incl. With Engine
Verado	Mercury/Mariner	2005 - 2016	USA	0T980000 and up	32-825191A03	Incl. With Engine
150 EFI FourStroke	Mercury/Mariner	2011 - 2016	USA	1B905505 and up	32-8M0062693	Incl. With Engine

THROTTLE AND SHIFT CABLES CHART

Compatibility of throttle/shift cable series to engine models is indicated in the following chart.

Throttle & Shift Cables

Model	850716A_ Cables	64-809894 _ Cables	29564A_ Cables	F195/_ Cables	F5H208/_ Cables	38286A_ Cables	820671A_ Cables (Morse 30 Series)	64-853951A_ Cables with Bellows	858342A_ Cables with Bellows	64-820676A_ Cables
Mercury/Mariner Outboard and MerCruiser MCM/MIE mo	-	-	-	-	-	X	-	-	-	-
MerCruiser (MCM/MIE) Models	X	-	-	-	-	-	-	-	-	-
Mercury/Mariner/Force Current Outboard Engines	X	-	-	-	X(6)	-	-	-	-	X(6)
Mariner 30/40 (2 cyl.) w/ integral oil injection (	X	-	-	-	-	-	-	-	-	-
Mariner 30M (s/n 036668 and above) (Japanese origin	X	-	-	-	-	-	-	-	-	-
Mariner 30 ML (s/n 336184 and above) (Japanese orig	X	-	-	-	-	-	-	-	-	-
Mariner 40 M (s/n 015001 and above) (Japanese origi	X	-	-	-	-	-	-	-	-	-
Mariner 40 ML (s/n 350001 and above) (Japanese orig	X	-	-	-	-	-	-	-	-	-
Mariner 8-60 hp. (Japanese origin) except Mariner	-	X	-	-	X(5)	-	-	-	-	X(5)
Mercury/Mariner 4/5 (Japanese origin)	-	X	-	-	X(5)	-	-	-	-	X(5)
Mercury Outboards pre-1960 (Gear rack style)	-	-	X	-	-	-	-	-	-	-
Force Outboards 1992 and Prior	-	-	-	X(1)	X(2)	-	-	-	-	-
Sport Jet 90/95/120 (1993-1996)(10/32 threaded en	-	-	-	-	-	-	X	-	-	-
Sport Jet 90/95/120 (1993-1996)(1/4-28 threaded e	-	-	-	-	-	-	-	X(4)	-	-
Sport Jet 120XR2 (1999 and Newer) Shift Cables	-	-	-	-	-	-	-	-	X(4)	-
Sport Jet 175 (1999 and Prior) Shift Cables	-	-	-	-	-	-	-	X(4)	-	-
Sport Jet 175 (2000 and Newer) Shift Cables	-	-	-	-	-	-	-	-	X(4)	-
Sport Jet Throttle Cables	-	-	-	-	-	-	-	-	-	X(3)
Mechanical Trim Indicators	-	-	-	-	X	-	-	-	-	X
Zero Effort Controls	-	-	-	-	X	-	-	-	-	X

(1) Connectors are included with this series of cable.

(2) These cables require an FA58976-1 throttle connector and an F58685-2 shift cable connector to complete assembly.

(3) Also requires use of 12505A 1 throttle cable connector.

(4) Includes shift cable bellows kit.

(5) Requires adapter 82779 to convert control end for use.

(6) Requires adapter 12505A 1 to convert engine end and adapter 82779 to convert control end.

GEN I / SAE PREMIUM THROTTLE / SHIFT CABLE

T/S CABLE- GEN I/SAE -PERFORMANCE CABLE



8M0052484

Throttle and shift cable has a stainless steel core with 16 Lay - Flexible core wire. Control end is a traditional Gen I connection and the engine end is a standard SAE threaded end. 5 1 ft (1.5m)

Must be used with a GEN I remote control and fits Mercury/Mariner 4/5 hp. Model Year 1987 and newer, 4/5/6 hp. FourStroke Model Year 1999 and newer, 8/9.9 hp. FourStroke Model Year 2005 and newer outboards, and Mariner 8 thru 60 hp. outboards of Japanese origin.

8M0052485

Throttle and shift cable has a stainless steel core with 16 Lay - Flexible core wire. Control end is a traditional Gen I connection and the engine end is a standard SAE threaded end. 6 ft (1.8m)

Must be used with a GEN I remote control and fits Mercury/Mariner 4/5 hp. Model Year 1987 and newer, 4/5/6 hp. FourStroke Model Year 1999 and newer, 8/9.9 hp. FourStroke Model Year 2005 and newer outboards, and Mariner 8 thru 60 hp. outboards of Japanese origin.

8M0052486

Throttle and shift cable has a stainless steel core with 16 Lay - Flexible core wire. Control end is a traditional Gen I connection and the engine end is a standard SAE threaded end. 7 ft (2.1m)

Must be used with a GEN I remote control and fits Mercury/Mariner 4/5 hp. Model Year 1987 and newer, 4/5/6 hp. FourStroke Model Year 1999 and newer, 8/9.9 hp. FourStroke Model Year 2005 and newer outboards, and Mariner 8 thru 60 hp. outboards of Japanese origin.

8M0052487

Throttle and shift cable has a stainless steel core with 16 Lay - Flexible core wire. Control end is a traditional Gen I connection and the engine end is a standard SAE threaded end. 8 ft (2.4m)

Must be used with a GEN I remote control and fits Mercury/Mariner 4/5 hp. Model Year 1987 and newer, 4/5/6 hp. FourStroke Model Year 1999 and newer, 8/9.9 hp. FourStroke Model Year 2005 and newer outboards, and Mariner 8 thru 60 hp. outboards of Japanese origin.

8M0052488

Throttle and shift cable has a stainless steel core with 16 Lay - Flexible core wire. Control end is a traditional Gen I connection and the engine end is a standard SAE threaded end. 9 ft (2.7m)

Must be used with a GEN I remote control and fits Mercury/Mariner 4/5 hp. Model Year 1987 and newer, 4/5/6 hp. FourStroke Model Year 1999 and newer, 8/9.9 hp. FourStroke Model Year 2005 and newer outboards, and Mariner 8 thru 60 hp. outboards of Japanese origin.

8M0052489

Throttle and shift cable has a stainless steel core with 16 Lay - Flexible core wire. Control end is a traditional Gen I connection and the engine end is a standard SAE threaded end.
10 ft (3.0m)

Must be used with a GEN I remote control and fits Mercury/Mariner 4/5 hp. Model Year 1987 and newer, 4/5/6 hp. FourStroke Model Year 1999 and newer, 8/9.9 hp. FourStroke Model Year 2005 and newer outboards, and Mariner 8 thru 60 hp. outboards of Japanese origin.

8M0052490

Throttle and shift cable has a stainless steel core with 16 Lay - Flexible core wire. Control end is a traditional Gen I connection and the engine end is a standard SAE threaded end.
11 ft (3.4m)

Must be used with a GEN I remote control and fits Mercury/Mariner 4/5 hp. Model Year 1987 and newer, 4/5/6 hp. FourStroke Model Year 1999 and newer, 8/9.9 hp. FourStroke Model Year 2005 and newer outboards, and Mariner 8 thru 60 hp. outboards of Japanese origin.

8M0052491

Throttle and shift cable has a stainless steel core with 16 Lay - Flexible core wire. Control end is a traditional Gen I connection and the engine end is a standard SAE threaded end.
12 ft (3.7m)

Must be used with a GEN I remote control and fits Mercury/Mariner 4/5 hp. Model Year 1987 and newer, 4/5/6 hp. FourStroke Model Year 1999 and newer, 8/9.9 hp. FourStroke Model Year 2005 and newer outboards, and Mariner 8 thru 60 hp. outboards of Japanese origin.

8M0052492

Throttle and shift cable has a stainless steel core with 16 Lay - Flexible core wire. Control end is a traditional Gen I connection and the engine end is a standard SAE threaded end.
13 ft (4.0m)

Must be used with a GEN I remote control and fits Mercury/Mariner 4/5 hp. Model Year 1987 and newer, 4/5/6 hp. FourStroke Model Year 1999 and newer, 8/9.9 hp. FourStroke Model Year 2005 and newer outboards, and Mariner 8 thru 60 hp. outboards of Japanese origin.

8M0052493

Throttle and shift cable has a stainless steel core with 16 Lay - Flexible core wire. Control end is a traditional Gen I connection and the engine end is a standard SAE threaded end.
14 ft (4.3m)

Must be used with a GEN I remote control and fits Mercury/Mariner 4/5 hp. Model Year 1987 and newer, 4/5/6 hp. FourStroke Model Year 1999 and newer, 8/9.9 hp. FourStroke Model Year 2005 and newer outboards, and Mariner 8 thru 60 hp. outboards of Japanese origin.

8M0052494

Throttle and shift cable has a stainless steel core with 16 Lay - Flexible core wire. Control end is a traditional Gen I connection and the engine end is a standard SAE threaded end.
15 ft (4.6m)

Must be used with a GEN I remote control and fits Mercury/Mariner 4/5 hp. Model Year 1987 and newer, 4/5/6 hp. FourStroke Model Year 1999 and newer, 8/9.9 hp. FourStroke Model Year 2005 and newer outboards, and Mariner 8 thru 60 hp. outboards of Japanese origin.

8M0052495

Throttle and shift cable has a stainless steel core with 16 Lay - Flexible core wire. Control end is a traditional Gen I connection and the engine end is a standard SAE threaded end.
16 ft (4.9m)

Must be used with a GEN I remote control and fits Mercury/Mariner 4/5 hp. Model Year 1987 and newer, 4/5/6 hp. FourStroke Model Year 1999 and newer, 8/9.9 hp. FourStroke Model Year 2005 and newer outboards, and Mariner 8 thru 60 hp. outboards of Japanese origin.

8M0052496

Throttle and shift cable has a stainless steel core with 16 Lay - Flexible core wire. Control end is a traditional Gen I connection and the engine end is a standard SAE threaded end.
17 ft (5.2m)

Must be used with a GEN I remote control and fits Mercury/Mariner 4/5 hp. Model Year 1987 and newer, 4/5/6 hp. FourStroke Model Year 1999 and newer, 8/9.9 hp. FourStroke Model Year 2005 and newer outboards, and Mariner 8 thru 60 hp. outboards of Japanese origin.

8M0052497

Throttle and shift cable has a stainless steel core with 16 Lay - Flexible core wire. Control end is a traditional Gen I connection and the engine end is a standard SAE threaded end.
18 ft (5.5m)

Must be used with a GEN I remote control and fits Mercury/Mariner 4/5 hp. Model Year 1987 and newer, 4/5/6 hp. FourStroke Model Year 1999 and newer, 8/9.9 hp. FourStroke Model Year 2005 and newer outboards, and Mariner 8 thru 60 hp. outboards of Japanese origin.

8M0052498

Throttle and shift cable has a stainless steel core with 16 Lay - Flexible core wire. Control end is a traditional Gen I connection and the engine end is a standard SAE threaded end.
19ft (5.8m)

Must be used with a GEN I remote control and fits Mercury/Mariner 4/5 hp. Model Year 1987 and newer, 4/5/6 hp. FourStroke Model Year 1999 and newer, 8/9.9 hp. FourStroke Model Year 2005 and newer outboards, and Mariner 8 thru 60 hp. outboards of Japanese origin.

8M0052499

Throttle and shift cable has a stainless steel core with 16 Lay - Flexible core wire. Control end is a traditional Gen I connection and the engine end is a standard SAE threaded end.
20 ft (6.1m)

Must be used with a GEN I remote control and fits Mercury/Mariner 4/5 hp. Model Year 1987 and newer, 4/5/6 hp. FourStroke Model Year 1999 and newer, 8/9.9 hp. FourStroke Model Year 2005 and newer outboards, and Mariner 8 thru 60 hp. outboards of Japanese origin.

8M0052500

Throttle and shift cable has a stainless steel core with 16 Lay - Flexible core wire. Control end is a traditional Gen I connection and the engine end is a standard SAE threaded end.
21 ft (6.4m)

Must be used with a GEN I remote control and fits Mercury/Mariner 4/5 hp. Model Year 1987 and newer, 4/5/6 hp. FourStroke Model Year 1999 and newer, 8/9.9 hp. FourStroke Model Year 2005 and newer outboards, and Mariner 8 thru 60 hp. outboards of Japanese origin.

8M0052501

Throttle and shift cable has a stainless steel core with 16 Lay - Flexible core wire. Control end is a traditional Gen I connection and the engine end is a standard SAE threaded end.
22 ft (6.7m)

Must be used with a GEN I remote control and fits Mercury/Mariner 4/5 hp. Model Year 1987 and newer, 4/5/6 hp. FourStroke Model Year 1999 and newer, 8/9.9 hp. FourStroke Model Year 2005 and newer outboards, and Mariner 8 thru 60 hp. outboards of Japanese origin.

8M0052502

Throttle and shift cable has a stainless steel core with 16 Lay - Flexible core wire. Control end is a traditional Gen I connection and the engine end is a standard SAE threaded end.
23 ft (7.0m)

Must be used with a GEN I remote control and fits Mercury/Mariner 4/5 hp. Model Year 1987 and newer, 4/5/6 hp. FourStroke Model Year 1999 and newer, 8/9.9 hp. FourStroke Model Year 2005 and newer outboards, and Mariner 8 thru 60 hp. outboards of Japanese origin.

8M0052503

Throttle and shift cable has a stainless steel core with 16 Lay - Flexible core wire. Control end is a traditional Gen I connection and the engine end is a standard SAE threaded end.
24 ft (7.3m)

Must be used with a GEN I remote control and fits Mercury/Mariner 4/5 hp. Model Year 1987 and newer, 4/5/6 hp. FourStroke Model Year 1999 and newer, 8/9.9 hp. FourStroke Model Year 2005 and newer outboards, and Mariner 8 thru 60 hp. outboards of Japanese origin.

8M0052504

Throttle and shift cable has a stainless steel core with 16 Lay - Flexible core wire. Control end is a traditional Gen I connection and the engine end is a standard SAE threaded end.
25 ft (7.6m)

Must be used with a GEN I remote control and fits Mercury/Mariner 4/5 hp. Model Year 1987 and newer, 4/5/6 hp. FourStroke Model Year 1999 and newer, 8/9.9 hp. FourStroke Model Year 2005 and newer outboards, and Mariner 8 thru 60 hp. outboards of Japanese origin.

8M0052505

Throttle and shift cable has a stainless steel core with 16 Lay - Flexible core wire. Control end is a traditional Gen I connection and the engine end is a standard SAE threaded end.
26 ft (7.9m)

Must be used with a GEN I remote control and fits Mercury/Mariner 4/5 hp. Model Year 1987 and newer, 4/5/6 hp. FourStroke Model Year 1999 and newer, 8/9.9 hp. FourStroke Model Year 2005 and newer outboards, and Mariner 8 thru 60 hp. outboards of Japanese origin.

8M0052506

Throttle and shift cable has a stainless steel core with 16 Lay - Flexible core wire. Control end is a traditional Gen I connection and the engine end is a standard SAE threaded end.
27 ft (8.2m)

Must be used with a GEN I remote control and fits Mercury/Mariner 4/5 hp. Model Year 1987 and newer, 4/5/6 hp. FourStroke Model Year 1999 and newer, 8/9.9 hp. FourStroke Model Year 2005 and newer outboards, and Mariner 8 thru 60 hp. outboards of Japanese origin.

8M0052507

Throttle and shift cable has a stainless steel core with 16 Lay - Flexible core wire. Control end is a traditional Gen I connection and the engine end is a standard SAE threaded end.
28 ft (8.5m)

Must be used with a GEN I remote control and fits Mercury/Mariner 4/5 hp. Model Year 1987 and newer, 4/5/6 hp. FourStroke Model Year 1999 and newer, 8/9.9 hp. FourStroke Model Year 2005 and newer outboards, and Mariner 8 thru 60 hp. outboards of Japanese origin.

8M0052508

Throttle and shift cable has a stainless steel core with 16 Lay - Flexible core wire. Control end is a traditional Gen I connection and the engine end is a standard SAE threaded end.
29 ft (8.8m)

Must be used with a GEN I remote control and fits Mercury/Mariner 4/5 hp. Model Year 1987 and newer, 4/5/6 hp. FourStroke Model Year 1999 and newer, 8/9.9 hp. FourStroke Model Year 2005 and newer outboards, and Mariner 8 thru 60 hp. outboards of Japanese origin.

8M0052509

Throttle and shift cable has a stainless steel core with 16 Lay - Flexible core wire. Control end is a traditional Gen I connection and the engine end is a standard SAE threaded end. 30 ft (9.1m)

Must be used with a GEN I remote control and fits Mercury/Mariner 4/5 hp. Model Year 1987 and newer, 4/5/6 hp. FourStroke Model Year 1999 and newer, 8/9.9 hp. FourStroke Model Year 2005 and newer outboards, and Mariner 8 thru 60 hp. outboards of Japanese origin.

PREMIUM T/S CABLES- GEN I / MERC- 897977 SERIES

Exceeds Mercury's rigid performance standards
Armor-wrapped stainless steel around 7 - wire stainless inner core
Brass, nickel plated ends for improved corrosion protection
Ideal for difficult rigging installations

Platinum Cables (877773___ series)have been replaced by Premium Cables- Same Performance

PREMIUM T/S CABLE- GEN I



897977A03

Premium throttle and shift build with stranded wire with SS armor wrap- 3 ft (.92m)
Brass ends with plating.
Ideal for performance applications as well as installations with various bends
Gen I Controls

897977A04

Premium throttle and shift build with stranded wire with SS armor wrap- 4 ft (1.2 m)
Brass ends with plating.
Ideal for performance applications as well as installations with various bends
Gen I Controls

897977A05

Premium throttle and shift build with stranded wire with SS armor wrap- 5 ft (1.5 m)
Brass ends with plating.
Ideal for performance applications as well as installations with various bends
Gen I Controls

897977A06

Premium throttle and shift build with stranded wire with SS armor wrap- 6 ft (1.8 m)
Brass ends with plating.
Ideal for performance applications as well as installations with various bends
Gen I Controls

MECHANICAL REMOTE CONTROLS

897977A07

Premium throttle and shift build with stranded wire with SS armor wrap- 7 ft (2.1 m)
Brass ends with plating.
Ideal for performance applications as well as installations with various bends
Gen I Controls

897977A08

Premium throttle and shift build with stranded wire with SS armor wrap- 8 ft (2.4 m)
Brass ends with plating.
Ideal for performance applications as well as installations with various bends
Gen I Controls

897977A09

Premium throttle and shift build with stranded wire with SS armor wrap- 9 ft (2.7 m)
Brass ends with plating.
Ideal for performance applications as well as installations with various bends
Gen I Controls

897977A10

Premium throttle and shift build with stranded wire with SS armor wrap- 10 ft (3.0 m)
Brass ends with plating.
Ideal for performance applications as well as installations with various bends
Gen I Controls

897977A11

Premium throttle and shift build with stranded wire with SS armor wrap- 11 ft (3.4 m)
Brass ends with plating.
Ideal for performance applications as well as installations with various bends
Gen I Controls

897977A12

Premium throttle and shift build with stranded wire with SS armor wrap- 12 ft (3.7 m)
Brass ends with plating.
Ideal for performance applications as well as installations with various bends
Gen I Controls

897977A13

Premium throttle and shift build with stranded wire with SS armor wrap- 13 ft (4.0 m)
Brass ends with plating.
Ideal for performance applications as well as installations with various bends
Gen I Controls

897977A14

Premium throttle and shift build with stranded wire with SS armor wrap- 14 ft (4.3 m)
Brass ends with plating.
Ideal for performance applications as well as installations with various bends
Gen I Controls

897977A15

Premium throttle and shift build with stranded wire with SS armor wrap- 15 ft (4.6 m)
Brass ends with plating.
Ideal for performance applications as well as installations with various bends
Gen I Controls

897977A16

Premium throttle and shift build with stranded wire with SS armor wrap- 16 ft (4.9 m)
Brass ends with plating.
Ideal for performance applications as well as installations with various bends
Gen I Controls

897977A17

Premium throttle and shift build with stranded wire with SS armor wrap- 17 ft (5.2 m)
Brass ends with plating.
Ideal for performance applications as well as installations with various bends
Gen I Controls

897977A18

Premium throttle and shift build with stranded wire with SS armor wrap- 18 ft (5.5 m)
Brass ends with plating.
Ideal for performance applications as well as installations with various bends
Gen I Controls

897977A19

Premium throttle and shift build with stranded wire with SS armor wrap- 19 ft (5.8 m)
Brass ends with plating.
Ideal for performance applications as well as installations with various bends
Gen I Controls

897977A20

Premium throttle and shift build with stranded wire with SS armor wrap- 20 ft (6.1 m)
Brass ends with plating.
Ideal for performance applications as well as installations with various bends
Gen I Controls

897977A21

Premium throttle and shift build with stranded wire with SS armor wrap- 21 ft (6.4 m)
Brass ends with plating.
Ideal for performance applications as well as installations with various bends
Gen I Controls

897977A22

Premium throttle and shift build with stranded wire with SS armor wrap- 22 ft (6.7 m)
Brass ends with plating.
Ideal for performance applications as well as installations with various bends
Gen I Controls

897977A23

Premium throttle and shift build with stranded wire with SS armor wrap- 23 ft (7.0 m)
Brass ends with plating.
Ideal for performance applications as well as installations with various bends
Gen I Controls

897977A24

Premium throttle and shift build with stranded wire with SS armor wrap- 24 ft (7.3 m)
Brass ends with plating.
Ideal for performance applications as well as installations with various bends
Gen I Controls

897977A25

Premium throttle and shift build with stranded wire with SS armor wrap- 25 ft (7.6 m)
Brass ends with plating.
Ideal for performance applications as well as installations with various bends
Gen I Controls

897977A26

Premium throttle and shift build with stranded wire with SS armor wrap- 26 ft (7.9 m)
Brass ends with plating.
Ideal for performance applications as well as installations with various bends
Gen I Controls

897977A27

Premium throttle and shift build with stranded wire with SS armor wrap- 27 ft (8.2 m)
Brass ends with plating.
Ideal for performance applications as well as installations with various bends
Gen I Controls

897977A28

Premium throttle and shift build with stranded wire with SS armor wrap- 28 ft (8.5 m)
Brass ends with plating.
Ideal for performance applications as well as installations with various bends
Gen I Controls

897977A29

Premium throttle and shift build with stranded wire with SS armor wrap- 29 ft (8.8 m)
Brass ends with plating.
Ideal for performance applications as well as installations with various bends
Gen I Controls

897977A30

Premium throttle and shift build with stranded wire with SS armor wrap- 30 ft (9.2 m)
Brass ends with plating.
Ideal for performance applications as well as installations with various bends
Gen I Controls

897977A32

Premium throttle and shift build with stranded wire with SS armor wrap- 32 ft (9.8 m)
Brass ends with plating.
Ideal for performance applications as well as installations with various bends
Gen I Controls

897977A34

Premium throttle and shift build with stranded wire with SS armor wrap- 34 ft (10.4 m)
Brass ends with plating.
Ideal for performance applications as well as installations with various bends
Gen I Controls

897977A36

Premium throttle and shift build with stranded wire with SS armor wrap- 36 ft (11.0 m)
Brass ends with plating.
Ideal for performance applications as well as installations with various bends
Gen I Controls

897977A38

Premium throttle and shift build with stranded wire with SS armor wrap- 38 ft (11.6 m)
Brass ends with plating.
Ideal for performance applications as well as installations with various bends
Gen I Controls

897977A40

Premium throttle and shift build with stranded wire with SS armor wrap- 40 ft (12.2 m)
Brass ends with plating.
Ideal for performance applications as well as installations with various bends
Gen I Controls

897977A42

Premium throttle and shift build with stranded wire with SS armor wrap- 42 ft (12.8 m)
Brass ends with plating.
Ideal for performance applications as well as installations with various bends
Gen I Controls

897977A44

Premium throttle and shift build with stranded wire with SS armor wrap- 44 ft (13.4 m)
Brass ends with plating.
Ideal for performance applications as well as installations with various bends
Gen I Controls

897977A46

Premium throttle and shift build with stranded wire with SS armor wrap- 46 ft (14.0 m)
Brass ends with plating.
Ideal for performance applications as well as installations with various bends
Gen I Controls

897977A48

Premium throttle and shift build with stranded wire with SS armor wrap- 48 ft (14.6 m)
Brass ends with plating.
Ideal for performance applications as well as installations with various bends
Gen I Controls

897977A50

Premium throttle and shift build with stranded wire with SS armor wrap- 50 ft (15.2 m)
Brass ends with plating.
Ideal for performance applications as well as installations with various bends
Gen I Controls

897977B09

Premium throttle and shift build with stranded wire with SS armor wrap- 9 ft (2.7 m)
Brass ends with plating.
Ideal for performance applications as well as installations with various bends
Bulk package of 24 pcs
Gen I Controls

897977B10

Premium throttle and shift build with stranded wire with SS armor wrap- 10 ft (3.0 m)
Brass ends with plating.
Ideal for performance applications as well as installations with various bends
Bulk package of 24 pcs
Gen I Controls

897977B11

Premium throttle and shift build with stranded wire with SS armor wrap- 11 ft (3.4 m)
Brass ends with plating.
Ideal for performance applications as well as installations with various bends
Bulk package of 24 pcs
Gen I Controls

897977B12

Premium throttle and shift build with stranded wire with SS armor wrap- 12 ft (3.7 m)
Brass ends with plating.
Ideal for performance applications as well as installations with various bends
Bulk package of 24 pcs
Gen I Controls

897977B13

Premium throttle and shift build with stranded wire with SS armor wrap- 13 ft (4.0 m)
Brass ends with plating.
Ideal for performance applications as well as installations with various bends
Bulk package of 24 pcs
Gen I Controls

897977B14

Premium throttle and shift build with stranded wire with SS armor wrap- 14 ft (4.3 m)
Brass ends with plating.
Ideal for performance applications as well as installations with various bends
Bulk package of 24 pcs
Gen I Controls

897977B15

Premium throttle and shift build with stranded wire with SS armor wrap- 15 ft (4.6 m)
Brass ends with plating.
Ideal for performance applications as well as installations with various bends
Bulk package of 24 pcs
Gen I Controls

897977B17

Premium throttle and shift build with stranded wire with SS armor wrap- 17 ft (5.2 m)
Brass ends with plating.
Ideal for performance applications as well as installations with various bends
Bulk package of 24 pcs
Gen I Controls

GEN II/ SAE PREMIUM THROTTLE / SHIFT CABLE

THROTTLE/SHIFT CABLE- GEN II/SAE- PERFORMANCE CABLE



8M0052676

Throttle and shift cable has a stainless steel core with 16 Lay - Flexible cable construction. Control end is a Gen II connection and the engine end is a standard SAE threaded end.
5 ft (1.5m)

Must be used with a GEN II remote control and fits Mercury/Mariner 4/5 hp. Model Year 1987 and newer, 4/5/6 hp. FourStroke Model Year 1999 and newer, 8/9.9 hp. FourStroke Model Year 2005 and newer outboards, and Mariner 8 thru 60 hp. outboards of Japanese origin.

MECHANICAL REMOTE CONTROLS

8M0052677

Throttle and shift cable has a stainless steel core with 16 Lay - Flexible cable construction. Control end is a Gen II connection and the engine end is a standard SAE threaded end.
6 ft (1.8m)

Must be used with a GEN II remote control and fits Mercury/Mariner 4/5 hp. Model Year 1987 and newer, 4/5/6 hp. FourStroke Model Year 1999 and newer, 8/9.9 hp. FourStroke Model Year 2005 and newer outboards, and Mariner 8 thru 60 hp. outboards of Japanese origin.

8M0052678

Throttle and shift cable has a stainless steel core with 16 Lay - Flexible cable construction. Control end is a Gen II connection and the engine end is a standard SAE threaded end.
7 ft (2.1m)

Must be used with a GEN II remote control and fits Mercury/Mariner 4/5 hp. Model Year 1987 and newer, 4/5/6 hp. FourStroke Model Year 1999 and newer, 8/9.9 hp. FourStroke Model Year 2005 and newer outboards, and Mariner 8 thru 60 hp. outboards of Japanese origin.

8M0052679

Throttle and shift cable has a stainless steel core with 16 Lay - Flexible cable construction. Control end is a Gen II connection and the engine end is a standard SAE threaded end.
8 ft (2.4m)

Must be used with a GEN II remote control and fits Mercury/Mariner 4/5 hp. Model Year 1987 and newer, 4/5/6 hp. FourStroke Model Year 1999 and newer, 8/9.9 hp. FourStroke Model Year 2005 and newer outboards, and Mariner 8 thru 60 hp. outboards of Japanese origin.

8M0052680

Throttle and shift cable has a stainless steel core with 16 Lay - Flexible cable construction. Control end is a Gen II connection and the engine end is a standard SAE threaded end.
9 ft (2.7m)

Must be used with a GEN II remote control and fits Mercury/Mariner 4/5 hp. Model Year 1987 and newer, 4/5/6 hp. FourStroke Model Year 1999 and newer, 8/9.9 hp. FourStroke Model Year 2005 and newer outboards, and Mariner 8 thru 60 hp. outboards of Japanese origin.

8M0052681

Throttle and shift cable has a stainless steel core with 16 Lay - Flexible cable construction. Control end is a Gen II connection and the engine end is a standard SAE threaded end.
10 ft (3.0m)

Must be used with a GEN II remote control and fits Mercury/Mariner 4/5 hp. Model Year 1987 and newer, 4/5/6 hp. FourStroke Model Year 1999 and newer, 8/9.9 hp. FourStroke Model Year 2005 and newer outboards, and Mariner 8 thru 60 hp. outboards of Japanese origin.

8M0052682

Throttle and shift cable has a stainless steel core with 16 Lay - Flexible cable construction. Control end is a Gen II connection and the engine end is a standard SAE threaded end.
11 ft (3.4m)

Must be used with a GEN II remote control and fits Mercury/Mariner 4/5 hp. Model Year 1987 and newer, 4/5/6 hp. FourStroke Model Year 1999 and newer, 8/9.9 hp. FourStroke Model Year 2005 and newer outboards, and Mariner 8 thru 60 hp. outboards of Japanese origin.

8M0052683

Throttle and shift cable has a stainless steel core with 16 Lay - Flexible cable construction. Control end is a Gen II connection and the engine end is a standard SAE threaded end.
12 ft (3.7m)

Must be used with a GEN II remote control and fits Mercury/Mariner 4/5 hp. Model Year 1987 and newer, 4/5/6 hp. FourStroke Model Year 1999 and newer, 8/9.9 hp. FourStroke Model Year 2005 and newer outboards, and Mariner 8 thru 60 hp. outboards of Japanese origin.

8M0052684

Throttle and shift cable has a stainless steel core with 16 Lay - Flexible cable construction. Control end is a Gen II connection and the engine end is a standard SAE threaded end.
13 ft (4.0m)

Must be used with a GEN II remote control and fits Mercury/Mariner 4/5 hp. Model Year 1987 and newer, 4/5/6 hp. FourStroke Model Year 1999 and newer, 8/9.9 hp. FourStroke Model Year 2005 and newer outboards, and Mariner 8 thru 60 hp. outboards of Japanese origin.

8M0052685

Throttle and shift cable has a stainless steel core with 16 Lay - Flexible cable construction. Control end is a Gen II connection and the engine end is a standard SAE threaded end.
14 ft (4.3m)

Must be used with a GEN II remote control and fits Mercury/Mariner 4/5 hp. Model Year 1987 and newer, 4/5/6 hp. FourStroke Model Year 1999 and newer, 8/9.9 hp. FourStroke Model Year 2005 and newer outboards, and Mariner 8 thru 60 hp. outboards of Japanese origin.

8M0052686

Throttle and shift cable has a stainless steel core with 16 Lay - Flexible cable construction. Control end is a Gen II connection and the engine end is a standard SAE threaded end.
15 ft (4.6m)

Must be used with a GEN II remote control and fits Mercury/Mariner 4/5 hp. Model Year 1987 and newer, 4/5/6 hp. FourStroke Model Year 1999 and newer, 8/9.9 hp. FourStroke Model Year 2005 and newer outboards, and Mariner 8 thru 60 hp. outboards of Japanese origin.

8M0052687

Throttle and shift cable has a stainless steel core with 16 Lay - Flexible cable construction. Control end is a Gen II connection and the engine end is a standard SAE threaded end.
16 ft (4.9m)

Must be used with a GEN II remote control and fits Mercury/Mariner 4/5 hp. Model Year 1987 and newer, 4/5/6 hp. FourStroke Model Year 1999 and newer, 8/9.9 hp. FourStroke Model Year 2005 and newer outboards, and Mariner 8 thru 60 hp. outboards of Japanese origin.

8M0052688

Throttle and shift cable has a stainless steel core with 16 Lay - Flexible cable construction. Control end is a Gen II connection and the engine end is a standard SAE threaded end.
17 ft (5.2m)

Must be used with a GEN II remote control and fits Mercury/Mariner 4/5 hp. Model Year 1987 and newer, 4/5/6 hp. FourStroke Model Year 1999 and newer, 8/9.9 hp. FourStroke Model Year 2005 and newer outboards, and Mariner 8 thru 60 hp. outboards of Japanese origin.

8M0052689

Throttle and shift cable has a stainless steel core with 16 Lay - Flexible cable construction. Control end is a Gen II connection and the engine end is a standard SAE threaded end.
18 ft (5.5m)

Must be used with a GEN II remote control and fits Mercury/Mariner 4/5 hp. Model Year 1987 and newer, 4/5/6 hp. FourStroke Model Year 1999 and newer, 8/9.9 hp. FourStroke Model Year 2005 and newer outboards, and Mariner 8 thru 60 hp. outboards of Japanese origin.

8M0052690

Throttle and shift cable has a stainless steel core with 16 Lay - Flexible cable construction. Control end is a Gen II connection and the engine end is a standard SAE threaded end.
19 ft (5.8m)

Must be used with a GEN II remote control and fits Mercury/Mariner 4/5 hp. Model Year 1987 and newer, 4/5/6 hp. FourStroke Model Year 1999 and newer, 8/9.9 hp. FourStroke Model Year 2005 and newer outboards, and Mariner 8 thru 60 hp. outboards of Japanese origin.

8M0052691

Throttle and shift cable has a stainless steel core with 16 Lay - Flexible cable construction. Control end is a Gen II connection and the engine end is a standard SAE threaded end.
20 ft (6.1m)

Must be used with a GEN II remote control and fits Mercury/Mariner 4/5 hp. Model Year 1987 and newer, 4/5/6 hp. FourStroke Model Year 1999 and newer, 8/9.9 hp. FourStroke Model Year 2005 and newer outboards, and Mariner 8 thru 60 hp. outboards of Japanese origin.

8M0052692

Throttle and shift cable has a stainless steel core with 16 Lay - Flexible cable construction. Control end is a Gen II connection and the engine end is a standard SAE threaded end.
21 ft (6.4m)

Must be used with a GEN II remote control and fits Mercury/Mariner 4/5 hp. Model Year 1987 and newer, 4/5/6 hp. FourStroke Model Year 1999 and newer, 8/9.9 hp. FourStroke Model Year 2005 and newer outboards, and Mariner 8 thru 60 hp. outboards of Japanese origin.

8M0052693

Throttle and shift cable has a stainless steel core with 16 Lay - Flexible cable construction. Control end is a Gen II connection and the engine end is a standard SAE threaded end.
22 ft (6.7m)

Must be used with a GEN II remote control and fits Mercury/Mariner 4/5 hp. Model Year 1987 and newer, 4/5/6 hp. FourStroke Model Year 1999 and newer, 8/9.9 hp. FourStroke Model Year 2005 and newer outboards, and Mariner 8 thru 60 hp. outboards of Japanese origin.

8M0052694

Throttle and shift cable has a stainless steel core with 16 Lay - Flexible cable construction. Control end is a Gen II connection and the engine end is a standard SAE threaded end.
23 ft (7.0m)

Must be used with a GEN II remote control and fits Mercury/Mariner 4/5 hp. Model Year 1987 and newer, 4/5/6 hp. FourStroke Model Year 1999 and newer, 8/9.9 hp. FourStroke Model Year 2005 and newer outboards, and Mariner 8 thru 60 hp. outboards of Japanese origin.

8M0052695

Throttle and shift cable has a stainless steel core with 16 Lay - Flexible cable construction. Control end is a Gen II connection and the engine end is a standard SAE threaded end.
24 ft (7.3m)

Must be used with a GEN II remote control and fits Mercury/Mariner 4/5 hp. Model Year 1987 and newer, 4/5/6 hp. FourStroke Model Year 1999 and newer, 8/9.9 hp. FourStroke Model Year 2005 and newer outboards, and Mariner 8 thru 60 hp. outboards of Japanese origin.

8M0052696

Throttle and shift cable has a stainless steel core with 16 Lay - Flexible cable construction. Control end is a Gen II connection and the engine end is a standard SAE threaded end.
25 ft (7.6m)

Must be used with a GEN II remote control and fits Mercury/Mariner 4/5 hp. Model Year 1987 and newer, 4/5/6 hp. FourStroke Model Year 1999 and newer, 8/9.9 hp. FourStroke Model Year 2005 and newer outboards, and Mariner 8 thru 60 hp. outboards of Japanese origin.

8M0052697

Throttle and shift cable has a stainless steel core with 16 Lay - Flexible cable construction. Control end is a Gen II connection and the engine end is a standard SAE threaded end.
26 ft (7.9m)

Must be used with a GEN II remote control and fits Mercury/Mariner 4/5 hp. Model Year 1987 and newer, 4/5/6 hp. FourStroke Model Year 1999 and newer, 8/9.9 hp. FourStroke Model Year 2005 and newer outboards, and Mariner 8 thru 60 hp. outboards of Japanese origin.

8M0052698

Throttle and shift cable has a stainless steel core with 16 Lay - Flexible cable construction. Control end is a Gen II connection and the engine end is a standard SAE threaded end.
27 ft (8.2m)

Must be used with a GEN II remote control and fits Mercury/Mariner 4/5 hp. Model Year 1987 and newer, 4/5/6 hp. FourStroke Model Year 1999 and newer, 8/9.9 hp. FourStroke Model Year 2005 and newer outboards, and Mariner 8 thru 60 hp. outboards of Japanese origin.

8M0052699

Throttle and shift cable has a stainless steel core with 16 Lay - Flexible cable construction. Control end is a Gen II connection and the engine end is a standard SAE threaded end.
28 ft (8.5m)

Must be used with a GEN II remote control and fits Mercury/Mariner 4/5 hp. Model Year 1987 and newer, 4/5/6 hp. FourStroke Model Year 1999 and newer, 8/9.9 hp. FourStroke Model Year 2005 and newer outboards, and Mariner 8 thru 60 hp. outboards of Japanese origin.

8M0052700

Throttle and shift cable has a stainless steel core with 16 Lay - Flexible core. Control end is a Gen II connection and the engine end is a standard SAE threaded end.
29 ft (8.8m)

Must be used with a GEN II remote control and fits Mercury/Mariner 4/5 hp. Model Year 1987 and newer, 4/5/6 hp. FourStroke Model Year 1999 and newer, 8/9.9 hp. FourStroke Model Year 2005 and newer outboards, and Mariner 8 thru 60 hp. outboards of Japanese origin.

8M0052701

Throttle and shift cable has a stainless steel core with 16 Lay - Flexible Core. Control end is a Gen II connection and the engine end is a standard SAE threaded end.
30 ft (9.2m)

Must be used with a GEN II remote control and fits Mercury/Mariner 4/5 hp. Model Year 1987 and newer, 4/5/6 hp. FourStroke Model Year 1999 and newer, 8/9.9 hp. FourStroke Model Year 2005 and newer outboards, and Mariner 8 thru 60 hp. outboards of Japanese origin.

PREMIUM T/S CABLES- GEN II - 897978 SERIES

Exceeds Mercury's rigid performance standards
Armor-wrapped stainless steel around 7 - wire stainless inner core
Brass, nickel plated ends for improved corrosion protection
Ideal for difficult rigging installations

Platinum Cables (883720___ series)have been replaced by Premium Cables- Same Performance

PREMIUM T/S CABLE- GEN II



897978A03

Premium throttle and shift build with stranded wire with SS armor wrap- 3 ft (.92m)
Brass ends with plating.
Ideal for performance applications as well as installations with various bends
Gen II Controls

897978A04

Premium throttle and shift build with stranded wire with SS armor wrap- 4 ft (1.2 m)
Brass ends with plating.
Ideal for performance applications as well as installations with various bends
Gen II Controls

897978A05

Premium throttle and shift build with stranded wire with SS armor wrap- 5 ft (1.5 m)
Brass ends with plating.
Ideal for performance applications as well as installations with various bends
Gen II Controls

897978A06

Premium throttle and shift build with stranded wire with SS armor wrap- 6 ft (1.8 m)
Brass ends with plating.
Ideal for performance applications as well as installations with various bends
Gen II Controls

897978A07

Premium throttle and shift build with stranded wire with SS armor wrap- 7 ft (2.1 m)
Brass ends with plating.
Ideal for performance applications as well as installations with various bends
Gen II Controls

897978A08

Premium throttle and shift build with stranded wire with SS armor wrap- 8 ft (2.4 m)
Brass ends with plating.
Ideal for performance applications as well as installations with various bends
Gen II Controls

897978A09

Premium throttle and shift build with stranded wire with SS armor wrap- 9 ft (2.7 m)
Brass ends with plating.
Ideal for performance applications as well as installations with various bends
Gen II Controls

MECHANICAL REMOTE CONTROLS

897978A10
Premium throttle and shift build with stranded wire with SS armor wrap- 10 ft (3.0 m)
Brass ends with plating.
Ideal for performance applications as well as installations with various bends
Gen II Controls

897978A11
Premium throttle and shift build with stranded wire with SS armor wrap- 11 ft (3.4 m)
Brass ends with plating.
Ideal for performance applications as well as installations with various bends
Gen II Controls

897978A12
Premium throttle and shift build with stranded wire with SS armor wrap- 12 ft (3.7 m)
Brass ends with plating.
Ideal for performance applications as well as installations with various bends
Gen II Controls

897978A13
Premium throttle and shift build with stranded wire with SS armor wrap- 13 ft (4.0 m)
Brass ends with plating.
Ideal for performance applications as well as installations with various bends
Gen II Controls

897978A14
Premium throttle and shift build with stranded wire with SS armor wrap- 14 ft (4.3 m)
Brass ends with plating.
Ideal for performance applications as well as installations with various bends
Gen II Controls

897978A15
Premium throttle and shift build with stranded wire with SS armor wrap- 15 ft (4.6 m)
Brass ends with plating.
Ideal for performance applications as well as installations with various bends
Gen II Controls

897978A16
Premium throttle and shift build with stranded wire with SS armor wrap- 16 ft (4.9 m)
Brass ends with plating.
Ideal for performance applications as well as installations with various bends
Gen II Controls

897978A18
Premium throttle and shift build with stranded wire with SS armor wrap- 18 ft (5.5 m)
Brass ends with plating.
Ideal for performance applications as well as installations with various bends
Gen II Controls

897978A19
Premium throttle and shift build with stranded wire with SS armor wrap- 19 ft (5.8 m)
Brass ends with plating.
Ideal for performance applications as well as installations with various bends
Gen II Controls

897978A20
Premium throttle and shift build with stranded wire with SS armor wrap- 20 ft (6.1 m)
Brass ends with plating.
Ideal for performance applications as well as installations with various bends
Gen II Controls

897978A21
Premium throttle and shift build with stranded wire with SS armor wrap- 21 ft (6.4 m)
Brass ends with plating.
Ideal for performance applications as well as installations with various bends
Gen II Controls

897978A22
Premium throttle and shift build with stranded wire with SS armor wrap- 22 ft (6.7 m)
Brass ends with plating.
Ideal for performance applications as well as installations with various bends
Gen II Controls

897978A23
Premium throttle and shift build with stranded wire with SS armor wrap- 23 ft (7.0 m)
Brass ends with plating.
Ideal for performance applications as well as installations with various bends
Gen II Controls

897978A24
Premium throttle and shift build with stranded wire with SS armor wrap- 24 ft (7.3 m)
Brass ends with plating.
Ideal for performance applications as well as installations with various bends
Gen II Controls

897978A25
Premium throttle and shift build with stranded wire with SS armor wrap- 25 ft (7.6 m)
Brass ends with plating.
Ideal for performance applications as well as installations with various bends
Gen II Controls

897978A26
Premium throttle and shift build with stranded wire with SS armor wrap- 26 ft (7.9 m)
Brass ends with plating.
Ideal for performance applications as well as installations with various bends
Gen II Controls

897978A27
Premium throttle and shift build with stranded wire with SS armor wrap- 27 ft (8.2 m)
Brass ends with plating.
Ideal for performance applications as well as installations with various bends
Gen II Controls

897978A28
Premium throttle and shift build with stranded wire with SS armor wrap- 28 ft (8.5 m)
Brass ends with plating.
Ideal for performance applications as well as installations with various bends
Gen II Controls

897978A29
Premium throttle and shift build with stranded wire with SS armor wrap- 29 ft (8.8 m)
Brass ends with plating.
Ideal for performance applications as well as installations with various bends
Gen II Controls

897978A30
Premium throttle and shift build with stranded wire with SS armor wrap- 30 ft (9.2 m)
Brass ends with plating.
Ideal for performance applications as well as installations with various bends
Gen II Controls

897978A32
Premium throttle and shift build with stranded wire with SS armor wrap- 32 ft (9.8 m)
Brass ends with plating.
Ideal for performance applications as well as installations with various bends
Gen II Controls

897978A34
Premium throttle and shift build with stranded wire with SS armor wrap- 34 ft (10.4 m)
Brass ends with plating.
Ideal for performance applications as well as installations with various bends
Gen II Controls

897978A36
Premium throttle and shift build with stranded wire with SS armor wrap- 36 ft (11.0 m)
Brass ends with plating.
Ideal for performance applications as well as installations with various bends
Gen II Controls

897978A38
Premium throttle and shift build with stranded wire with SS armor wrap- 38 ft (11.6 m)
Brass ends with plating.
Ideal for performance applications as well as installations with various bends
Gen II Controls

897978A40

Premium throttle and shift build with stranded wire with SS armor wrap- 40 ft (12.2 m)
Brass ends with plating.
Ideal for performance applications as well as installations with various bends
Gen II Controls

897978A42

Premium throttle and shift build with stranded wire with SS armor wrap- 42 ft (12.8 m)
Brass ends with plating.
Ideal for performance applications as well as installations with various bends
Gen II Controls

897978A44

Premium throttle and shift build with stranded wire with SS armor wrap- 44 ft (13.4 m)
Brass ends with plating.
Ideal for performance applications as well as installations with various bends
Gen II Controls

897978A46

Premium throttle and shift build with stranded wire with SS armor wrap- 46 ft (14.0 m)
Brass ends with plating.
Ideal for performance applications as well as installations with various bends
Gen II Controls

897978A48

Premium throttle and shift build with stranded wire with SS armor wrap- 48 ft (14.6 m)
Brass ends with plating.
Ideal for performance applications as well as installations with various bends
Gen II Controls

897978A50

Premium throttle and shift build with stranded wire with SS armor wrap- 50 ft (15.2 m)
Brass ends with plating.
Ideal for performance applications as well as installations with various bends
Gen II Controls

897978B08

Premium throttle and shift build with stranded wire with SS armor wrap- 8 ft (2.4 m)
Brass ends with plating.
Ideal for performance applications as well as installations with various bends
Bulk package of 24 pcs
Gen II Controls

897978B09

Premium throttle and shift build with stranded wire with SS armor wrap- 9 ft (2.7 m)
Brass ends with plating.
Ideal for performance applications as well as installations with various bends
Bulk package of 24 pcs
Gen II Controls

897978B10

Premium throttle and shift build with stranded wire with SS armor wrap- 10 ft (3.0 m)
Brass ends with plating.
Ideal for performance applications as well as installations with various bends
Bulk package of 24 pcs
Gen II Controls

897978B11

Premium throttle and shift build with stranded wire with SS armor wrap- 11 ft (3.4 m)
Brass ends with plating.
Ideal for performance applications as well as installations with various bends
Bulk package of 24 pcs
Gen II Controls

897978B12

Premium throttle and shift build with stranded wire with SS armor wrap- 12 ft (3.7 m)
Brass ends with plating.
Ideal for performance applications as well as installations with various bends
Bulk package of 24 pcs
Gen II Controls

897978B13

Premium throttle and shift build with stranded wire with SS armor wrap- 13 ft (4.0 m)
Brass ends with plating.
Ideal for performance applications as well as installations with various bends
Bulk package of 24 pcs
Gen II Controls

897978B14

Premium throttle and shift build with stranded wire with SS armor wrap- 14 ft (4.3 m)
Brass ends with plating.
Ideal for performance applications as well as installations with various bends
Bulk package of 24 pcs
Gen II Controls

897978B15

Premium throttle and shift build with stranded wire with SS armor wrap- 15 ft (4.6 m)
Brass ends with plating.
Ideal for performance applications as well as installations with various bends
Bulk package of 24 pcs
Gen II Controls

897978B16

Premium throttle and shift build with stranded wire with SS armor wrap- 16 ft (4.9 m)
Brass ends with plating.
Ideal for performance applications as well as installations with various bends
Bulk package of 24 pcs
Gen II Controls

897978B17

Premium throttle and shift build with stranded wire with SS armor wrap- 17 ft (5.2 m)
Brass ends with plating.
Ideal for performance applications as well as installations with various bends
Bulk package of 24 pcs
Gen II Controls

897978B18

Premium throttle and shift build with stranded wire with SS armor wrap- 18 ft (5.5 m)
Brass ends with plating.
Ideal for performance applications as well as installations with various bends
Bulk package of 24 pcs
Gen II Controls

897978B19

Premium throttle and shift build with stranded wire with SS armor wrap- 19 ft (5.8 m)
Brass ends with plating.
Ideal for performance applications as well as installations with various bends
Bulk package of 24 pcs
Gen II Controls

897978B20

Premium throttle and shift build with stranded wire with SS armor wrap- 20 ft (6.1 m)
Brass ends with plating.
Ideal for performance applications as well as installations with various bends
Bulk package of 24 pcs
Gen II Controls

897978B22

Premium throttle and shift build with stranded wire with SS armor wrap- 22 ft (6.7 m)
Brass ends with plating.
Ideal for performance applications as well as installations with various bends
Gen II Controls
Priced individually, sold @ multiples of 24

897978B23

Premium throttle and shift build with stranded wire with SS armor wrap- 23 ft (7.0 m)
Brass ends with plating.
Ideal for performance applications as well as installations with various bends
Bulk package of 24 pcs
Gen II Controls

897978B24

Premium throttle and shift build with stranded wire with SS armor wrap- 24 ft (7.3 m)
Brass ends with plating.
Ideal for performance applications as well as installations with various bends
Bulk package of 24 pcs
Gen II Controls

897978B25

Premium throttle and shift build with stranded wire with SS armor wrap- 25 ft (7.6 m)
Brass ends with plating.
Ideal for performance applications as well as installations with various bends
Bulk package of 24 pcs
Gen II Controls

897978B26

Premium throttle and shift build with stranded wire with SS armor wrap- 26 ft (7.9 m)
Brass ends with plating.
Ideal for performance applications as well as installations with various bends
Bulk package of 24 pcs
Gen II Controls

PREMIUM T/S CABLES- SAE/SAE - 897979 SERIES

Exceeds Mercury's rigid performance standards
Armor-wrapped stainless steel around 7 - wire stainless inner core
Brass, nickel plated ends for improved corrosion protection
Ideal for difficult rigging installations

Platinum Cables (877774___ series)have been replaced by Premium Cables- Same Performance

PREMIUM T/S CABLE- SAE/SAE

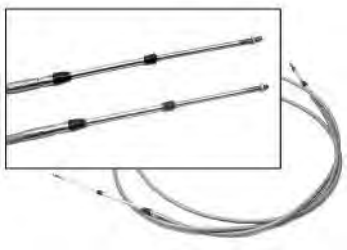

897979A03

Premium throttle and shift build with stranded wire with SS armor wrap- 3 ft (.92m)
Brass ends with plating.
Ideal for performance applications as well as installations with various bends

897979A04

Premium throttle and shift build with stranded wire with SS armor wrap- 4 ft (1.2 m)
Brass ends with plating.
Ideal for performance applications as well as installations with various bends

897979A05

Premium throttle and shift build with stranded wire with SS armor wrap- 5 ft (1.5 m)
Brass ends with plating.
Ideal for performance applications as well as installations with various bends

897979A06

Premium throttle and shift build with stranded wire with SS armor wrap- 6 ft (1.8 m)
Brass ends with plating.
Ideal for performance applications as well as installations with various bends

897979A07

Premium throttle and shift build with stranded wire with SS armor wrap- 7 ft (2.1 m)
Brass ends with plating.
Ideal for performance applications as well as installations with various bends

897979A08

Premium throttle and shift build with stranded wire with SS armor wrap- 8 ft (2.4 m)
Brass ends with plating.
Ideal for performance applications as well as installations with various bends

897979A09

Premium throttle and shift build with stranded wire with SS armor wrap- 9 ft (2.7 m)
Brass ends with plating.
Ideal for performance applications as well as installations with various bends

897979A10

Premium throttle and shift build with stranded wire with SS armor wrap- 10 ft (3.0 m)
Brass ends with plating.
Ideal for performance applications as well as installations with various bends

897979A11

Premium throttle and shift build with stranded wire with SS armor wrap- 11 ft (3.4 m)
Brass ends with plating.
Ideal for performance applications as well as installations with various bends

897979A12

Premium throttle and shift build with stranded wire with SS armor wrap- 12 ft (3.7 m)
Brass ends with plating.
Ideal for performance applications as well as installations with various bends

897979A13

Premium throttle and shift build with stranded wire with SS armor wrap- 13 ft (4.0 m)
Brass ends with plating.
Ideal for performance applications as well as installations with various bends

897979A14

Premium throttle and shift build with stranded wire with SS armor wrap- 14 ft (4.3 m)
Brass ends with plating.
Ideal for performance applications as well as installations with various bends

897979A15

Premium throttle and shift build with stranded wire with SS armor wrap- 15 ft (4.6 m)
Brass ends with plating.
Ideal for performance applications as well as installations with various bends

897979A16

Premium throttle and shift build with stranded wire with SS armor wrap- 16 ft (4.9 m)
Brass ends with plating.
Ideal for performance applications as well as installations with various bends

897979A17

Premium throttle and shift build with stranded wire with SS armor wrap- 17 ft (5.2 m)
Brass ends with plating.
Ideal for performance applications as well as installations with various bends

897979A18

Premium throttle and shift build with stranded wire with SS armor wrap- 18 ft (5.5 m)
Brass ends with plating.
Ideal for performance applications as well as installations with various bends

897979A19

Premium throttle and shift build with stranded wire with SS armor wrap- 19 ft (5.8 m)
Brass ends with plating.
Ideal for performance applications as well as installations with various bends

897979A20

Premium throttle and shift build with stranded wire with SS armor wrap- 20 ft (6.1 m)
Brass ends with plating.
Ideal for performance applications as well as installations with various bends

897979A21

Premium throttle and shift build with stranded wire with SS armor wrap- 21 ft (6.4 m)
Brass ends with plating.
Ideal for performance applications as well as installations with various bends

897979A22

Premium throttle and shift build with stranded wire with SS armor wrap- 22 ft (6.7 m)
Brass ends with plating.
Ideal for performance applications as well as installations with various bends

897979A23

Premium throttle and shift build with stranded wire with SS armor wrap- 23 ft (7.0 m)
Brass ends with plating.
Ideal for performance applications as well as installations with various bends

897979A24

Premium throttle and shift build with stranded wire with SS armor wrap- 24 ft (7.3 m)
Brass ends with plating.
Ideal for performance applications as well as installations with various bends

897979A25
Premium throttle and shift build with stranded wire with SS armor wrap- 25 ft (7.6 m)
Brass ends with plating.
Ideal for performance applications as well as installations with various bends

897979A26
Premium throttle and shift build with stranded wire with SS armor wrap- 26 ft (7.9 m)
Brass ends with plating.
Ideal for performance applications as well as installations with various bends

897979A27
Premium throttle and shift build with stranded wire with SS armor wrap- 27 ft (8.2 m)
Brass ends with plating.
Ideal for performance applications as well as installations with various bends

897979A28
Premium throttle and shift build with stranded wire with SS armor wrap- 28 ft (8.5 m)
Brass ends with plating.
Ideal for performance applications as well as installations with various bends

897979A29
Premium throttle and shift build with stranded wire with SS armor wrap- 29 ft (8.8 m)
Brass ends with plating.
Ideal for performance applications as well as installations with various bends

897979A30
Premium throttle and shift build with stranded wire with SS armor wrap- 30 ft (9.2 m)
Brass ends with plating.
Ideal for performance applications as well as installations with various bends

897979A32
Premium throttle and shift build with stranded wire with SS armor wrap- 32 ft (9.8 m)
Brass ends with plating.
Ideal for performance applications as well as installations with various bends

897979A34
Premium throttle and shift build with stranded wire with SS armor wrap- 34 ft (10.4 m)
Brass ends with plating.
Ideal for performance applications as well as installations with various bends

897979A36
Premium throttle and shift build with stranded wire with SS armor wrap- 36 ft (11.0 m)
Brass ends with plating.
Ideal for performance applications as well as installations with various bends

897979A38
Premium throttle and shift build with stranded wire with SS armor wrap- 38 ft (11.6 m)
Brass ends with plating.
Ideal for performance applications as well as installations with various bends

897979A40
Premium throttle and shift build with stranded wire with SS armor wrap- 40 ft (12.2 m)
Brass ends with plating.
Ideal for performance applications as well as installations with various bends

897979A42
Premium throttle and shift build with stranded wire with SS armor wrap- 42 ft (12.8 m)
Brass ends with plating.
Ideal for performance applications as well as installations with various bends

897979A44
Premium throttle and shift build with stranded wire with SS armor wrap- 44 ft (13.4 m)
Brass ends with plating.
Ideal for performance applications as well as installations with various bends

897979A46
Premium throttle and shift build with stranded wire with SS armor wrap- 46 ft (14.0 m)
Brass ends with plating.
Ideal for performance applications as well as installations with various bends

897979A50
Premium throttle and shift build with stranded wire with SS armor wrap- 50 ft (15.2 m)
Brass ends with plating.
Ideal for performance applications as well as installations with various bends

THROTTLE/SHIFT GEN I - XTREME CABLES

This performance throttle and shift cable was designed to improve durability and shift efficency. Improves the effort it takes to shift in and our of gear.

THROTTLE AND SHIFT CABLE - XTREME GEN I



8M0059882
New cable that has improved performance that reduces shift effort (5 Ft)
Use on the 150 4 Stroke

8M0059883
New cable that has improved performance that reduces shift effort (6 Ft)
Use on the 150 4 Stroke

8M0059884
New cable that has improved performance that reduces shift effort (7 Ft)
Use on the 150 4 Stroke

8M0059885
New cable that has improved performance that reduces shift effort (8 Ft)
Use on the 150 4 Stroke

8M0059886
New cable that has improved performance that reduces shift effort (9 Ft)
Use on the 150 4 Stroke

8M0059887
New cable that has improved performance that reduces shift effort (10 Ft)
Use on the 150 4 Stroke

8M0059888
New cable that has improved performance that reduces shift effort (11 Ft)
Use on the 150 4 Stroke

8M0059889
New cable that has improved performance that reduces shift effort (12 Ft)
Use on the 150 4 Stroke

8M0059890
New cable that has improved performance that reduces shift effort (13 Ft)
Use on the 150 4 Stroke

8M0059891
New cable that has improved performance that reduces shift effort (14 Ft)
Use on the 150 4 Stroke

8M0059892
New cable that has improved performance that reduces shift effort (15Ft)
Use on the 150 4 Stroke

8M0059893
New cable that has improved performance that reduces shift effort (16 Ft)
Use on the 150 4 Stroke

8M0059894
New cable that has improved performance that reduces shift effort (17 Ft)
Use on the 150 4 Stroke

8M0059895
New cable that has improved performance that reduces shift effort (18 Ft)
Use on the 150 4 Stroke

8M0059896
New cable that has improved performance that reduces shift effort (19 Ft)
Use on the 150 4 Stroke

8M0059897
New cable that has improved performance that reduces shift effort (20 Ft)
Use on the 150 4 Stroke

8M0059898
New cable that has improved performance that reduces shift effort (21 Ft)
Use on the 150 4 Stroke

8M0059899
New cable that has improved performance that reduces shift effort (22 Ft)
Use on the 150 4 Stroke

THROTTLE AND SHIFT CABLE - XTREME GEN I



8M0059900
New cable that has improved performance that reduces shift effort (23 Ft)
Use on the 150 4 Stroke

8M0059901
New cable that has improved performance that reduces shift effort (24 Ft)
Use on the 150 4 Stroke

8M0059902
New cable that has improved performance that reduces shift effort (25 Ft)
Use on the 150 4 Stroke

8M0059903
New cable that has improved performance that reduces shift effort (40 Ft)
Use on the 150 4 Stroke

8M0059904
New cable that has improved performance that reduces shift effort (27 Ft)
Use on the 150 4 Stroke

8M0059905
New cable that has improved performance that reduces shift effort (28 Ft)
Use on the 150 4 Stroke

8M0059906
New cable that has improved performance that reduces shift effort (29 Ft)
Use on the 150 4 Stroke

8M0059907
New cable that has improved performance that reduces shift effort (30 Ft)
Use on the 150 4 Stroke

8M0059908
New cable that has improved performance that reduces shift effort (32 Ft)
Use on the 150 4 Stroke

8M0059909
New cable that has improved performance that reduces shift effort (34 Ft)
Use on the 150 4 Stroke

8M0059910
New cable that has improved performance that reduces shift effort (36 Ft)
Use on the 150 4 Stroke

8M0059945
New cable that has improved performance that reduces shift effort (38 Ft)
Use on the 150 4 Stroke

8M0059946
New cable that has improved performance that reduces shift effort (40 Ft)
Use on the 150 4 Stroke

THROTTLE/SHIFT GEN II- XTREME CABLES

This performance throttle and shift cable was designed to improve durability and shift efficency. Improves the effort it takes to shift in and our of gear.

THROTTLE AND SHIFT CABLE - XTREME GEN II



8M0059850
New cable that has improved performance that reduces shift effort (5 Ft)
Use on the 150 4 Stroke

8M0059851
New cable that has improved performance that reduces shift effort (5 Ft)
Use on the 150 4 Stroke

8M0059852
New cable that has improved performance that reduces shift effort (7 Ft)
Use on the 150 4 Stroke

8M0059853
New cable that has improved performance that reduces shift effort (8 Ft)
Use on the 150 4 Stroke

8M0059854
New cable that has improved performance that reduces shift effort (9 Ft)
Use on the 150 4 Stroke

8M0059855
New cable that has improved performance that reduces shift effort (10 FT)
Use on the 150 4 Stroke

8M0059856
New cable that has improved performance that reduces shift effort (11 Ft)
Use on the 150 4 Stroke

8M0059857
New cable that has improved performance that reduces shift effort (12 Ft)
Use on the 150 4 Stroke

8M0059858
New cable that has improved performance that reduces shift effort (113 Ft)
Use on the 150 4 Stroke

8M0059859
New cable that has improved performance that reduces shift effort (14 Ft)
Use on the 150 4 Stroke

8M0059860
New cable that has improved performance that reduces shift effort (15 Ft)
Use on the 150 4 Stroke

8M0059861
New cable that has improved performance that reduces shift effort (16 Ft)
Use on the 150 4 Stroke

8M0059862
New cable that has improved performance that reduces shift effort (17 Ft)
Use on the 150 4 Stroke

8M0059863
New cable that has improved performance that reduces shift effort (18 Ft)
Use on the 150 4 Stroke

8M0059864
New cable that has improved performance that reduces shift effort (19 Ft)
Use on the 150 4 Stroke

8M0059865
New cable that has improved performance that reduces shift effort (20 Ft)
Use on the 150 4 Stroke

8M0059866
New cable that has improved performance that reduces shift effort (21 Ft)
Use on the 150 4 Stroke

8M0059867
New cable that has improved performance that reduces shift effort (522Ft)
Use on the 150 4 Stroke

8M0059868
New cable that has improved performance that reduces shift effort (23 Ft)
Use on the 150 4 Stroke

8M0059869
New cable that has improved performance that reduces shift effort (24 Ft)
Use on the 150 4 Stroke

8M0059870
New cable that has improved performance that reduces shift effort (25 Ft)
Use on the 150 4 Stroke

8M0059871
New cable that has improved performance that reduces shift effort (26 Ft)
Use on the 150 4 Stroke

8M0059872
New cable that has improved performance that reduces shift effort (27 Ft)
Use on the 150 4 Stroke

8M0059873
New cable that has improved performance that reduces shift effort (528Ft)
Use on the 150 4 Stroke

8M0059874
New cable that has improved performance that reduces shift effort (29 Ft)
Use on the 150 4 Stroke

8M0059875
New cable that has improved performance that reduces shift effort (30 Ft)
Use on the 150 4 Stroke

8M0059876
New cable that has improved performance that reduces shift effort (32 Ft)
Use on the 150 4 Stroke

8M0059877
New cable that has improved performance that reduces shift effort (34 Ft)
Use on the 150 4 Stroke

8M0059878
New cable that has improved performance that reduces shift effort (36 Ft)
Use on the 150 4 Stroke

8M0059879
New cable that has improved performance that reduces shift effort (38 Ft)
Use on the 150 4 Stroke

8M0059880
New cable that has improved performance that reduces shift effort (40 Ft)
Use on the 150 4 Stroke

MORSE 33C SERIES CABLE ADAPTERS

CABLE ADAPTER



82779
To convert control end of Morse 33C style cable to 64-809894- cable application.

ADAPTER KIT -MERCURY (T/S)



64-892790A01
Adapts 33C style cables for use with Mercury engines- Includes 2 sets of parts for two cables

ADAPTER KIT -JOHNSON/EVINRUDE (T/S)



64-892790A02
Adapts 33C style cables for use with Johnson/Evinrude engines. Includes 2 sets of parts for two cables

CABLE ADAPTER KIT



889355A 1
Adapts throttle/shift cables with 10/32 UNF threaded engine end for use with the 225 EFI FourStroke outboard.

CABLE ADAPTER KIT



898289A21
Converts an older SAE cable engine to accept Mercury style throttle/shift cables. Fits the 8/9.9 hp. FourStroke (209cc) outboard, serial number 0R192771 and prior.

F5H208/__ THROTTLE AND SHIFT CABLES

Available in 1 ft.(305 mm) increments up to 26 ft.(7.9 m). Packaged two cables per carton. Connectors are not shipped with cables and must be purchased separately. Fits Force outboards (1992 and prior)

FORCE THROTTLE AND SHIFT CABLE



F5H208/10
Cable end connectors not included
3.0 m (10 ft.)

F5H208/18
Cable end connectors not included
5.5 m (18 ft.)

F5H208/20
Cable end connectors not included
6.1 m (20 ft.)

F5H208/22
Cable end connectors not included
6.7 m (22 ft.)

FORCE 1992 AND PRIOR CABLE CONNECTORS

THROTTLE CABLE CONNECTOR



FA58976-1
Fits Force outboards (1992 and prior)

SHIFT CABLE CONNECTOR

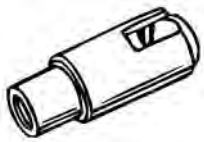

F58685-2
Fits Force outboards (1992 and prior)

820671A_ SERIES SHIFT CABLES

30 Series cable with 10/32 end threads.

SHIFT CABLE



820671A 8
30 series cable with 10/32 end threads.
Fits Sport-Jet 90/95/120 (1993-96)
2.4 m (8 ft.)

820671A10
30 series cable with 10/32 end threads.
Fits Sport-Jet 90/95/120 (1993-96)
3.0 m (10 ft.)

820671A12
30 series cable with 10/32 end threads.
Fits Sport-Jet 90/95/120 (1993-96)
3.7 m (12 ft.)

820671A14
30 series cable with 10/32 end threads.
Fits Sport-Jet 90/95/120 (1993-96)
4.3 m (14 ft.)

820671A16
30 series cable with 10/32 end threads.
Fits Sport-Jet 90/95/120 (1993-96)
4.9 m (16 ft.)

820671A18
30 series cable with 10/32 end threads.
Fits Sport-Jet 90/95/120 (1993-96)
5.5 m (18 ft.)

64-853951A_ SERIES SHIFT CABLES

SHIFT CABLE



64-853951A10
40 series cable with 1/4-28 end threads. Includes shift cable bellows kit.
Fits Sport-Jet 175 (1997 thru 1999) and can also be used for 90/95/120 when used with optional Remote Control and Conversion Kit 850698A 1.
3.0 m (10 ft.)

64-853951A12
40 series cable with 1/4-28 end threads. Includes shift cable bellows kit.
Fits Sport-Jet 175 (1997 thru 1999) and can also be used for 90/95/120 when used with optional Remote Control and Conversion Kit 850698A 1.
3.7 m (12 ft.)

64-853951A14

40 series cable with 1/4-28 end threads. Includes shift cable bellows kit.

Fits Sport-Jet 175 (1997 thru 1999) and can also be used for 90/95/120 when used with optional Remote Control and Conversion Kit 850698A 1.

4.3 m (14 ft.)

64-853951A16

40 series cable with 1/4-28 end threads. Includes shift cable bellows kit.

Fits Sport-Jet 175 (1997 thru 1999) and can also be used for 90/95/120 when used with optional Remote Control and Conversion Kit 850698A 1.

4.9 m (16 ft.)

64-853951A18

40 series cable with 1/4-28 end threads. Includes shift cable bellows kit.

Fits Sport-Jet 175 (1997 thru 1999) and can also be used for 90/95/120 when used with optional Remote Control and Conversion Kit 850698A 1.

5.5 m (18 ft.)

858342A_ SERIES SHIFT CABLES

SHIFT CABLE



858342A 8

40 series cable with cable end connector. Includes shift cable bellows kit.

Fits Sport-Jet 120XR2 (1999 and newer) and 175 (2000 and newer). Also fits 200 OptiMax, 210 & 240 EFI Jet Drives.

2.4 m (8 ft.)

858342A10

40 series cable with cable end connector. Includes shift cable bellows kit.

Fits Sport-Jet 120XR2 (1999 and newer) and 175 (2000 and newer). Also fits 200 OptiMax, 210 & 240 EFI Jet Drives.

3.0 m (10 ft.)

858342A12

40 series cable with cable end connector. Includes shift cable bellows kit.

Fits Sport-Jet 120XR2 (1999 and newer) and 175 (2000 and newer). Also fits 200 OptiMax, 210 & 240 EFI Jet Drives.

3.7 m (12 ft.)

858342A14

40 series cable with cable end connector. Includes shift cable bellows kit.

Fits Sport-Jet 120XR2 (1999 and newer) and 175 (2000 and newer). Also fits 200 OptiMax, 210 & 240 EFI Jet Drives.

4.3 m (14 ft.)

858342A16

40 series cable with cable end connector. Includes shift cable bellows kit.

Fits Sport-Jet 120XR2 (1999 and newer) and 175 (2000 and newer). Also fits 200 OptiMax, 210 & 240 EFI Jet Drives.

4.9 m (16 ft.)

858342A18

40 series cable with cable end connector. Includes shift cable bellows kit.

Fits Sport-Jet 120XR2 (1999 and newer) and 175 (2000 and newer). Also fits 200 OptiMax, 210 & 240 EFI Jet Drives.

5.5 m (18 ft.)

858342A20

40 series cable with cable end connector. Includes shift cable bellows kit.

Fits Sport-Jet 120XR2 (1999 and newer) and 175 (2000 and newer). Also fits 200 OptiMax, 210 & 240 EFI Jet Drives.

6.1 m (20 ft.)

858342A22

40 series cable with cable end connector. Includes shift cable bellows kit.

Fits Sport-Jet 120XR2 (1999 and newer) and 175 (2000 and newer). Also fits 200 OptiMax, 210 & 240 EFI Jet Drives.

6.7 m (22 ft.)

TWO STATION THROTTLE & SHIFT CABLES ATTACHING KIT

For use with Dual station Two Lever Controls.

TWO STATION THROTTLE/SHIFT KIT



89645A34

For use in dual MerCruiser control stations. Includes hardware for attaching throttle and shift cables from both stations to the engine. Twin engines require two kits.

Fits MCM/MIE carburetor and EFI (TBI) models

TWO STATION THROTTLE/SHIFT KIT



89645A37

For use in dual MerCruiser control stations. Includes hardware for attaching throttle and shift cables from both stations to the engine. Twin engines require two kits.

Fits MCM/MIE MPI models, except 8.2L engines

TWO STATION THROTTLE/SHIFT KIT



8M0046250

For use in dual MerCruiser control stations. Includes hardware for attaching throttle and shift cables from both stations to the engine. Twin engines require two kits.

Fits MCM/MIE 8.2L models

BULKHEAD FITTINGS AND BELLOWS KITS

BULKHEAD COMPRESSION FITTINGS



820675

Fits Sport-Jet 90/95/120 and 175 with 40 series cables. Also fits 200 OptiMax, 210 & 240 EFI Jet Drives.

BULKHEAD COMPRESSION FITTINGS



820677A 1

For 30 series cable, use either Bulkhead Compression Fittings or Bulkhead Bellows Kits. Not for use together.

Fits Sport-Jet 90/95/120 with 30 series shift cables.

SHIFT CABLE BELLOWS



877581A 5

For 40 series cable, installs on cable outside of transom.

Fits Sport-Jet 120XR2 and 175 (2000 and newer) with 40 series shift cables. Also fits 200 OptiMax, 210 & 240 EFI Jet Drives.

BULKHEAD BELLOWS KIT



850697A 2

Fits Jet Drive models with 40 series cables

JOYSTICK RIGGING

JOYSTICK ASSEMBLY

Image not Available.

879365A21

The Joystick assembly is part of multiple Joystick Piloting kits to make boating easy.

The Joystick steering is offered across multiple engine systems. Joystick Piloting for Outboards (JPO), Joystick Piloting for Sterndrive (JPS) and ZEUS for Diesel.

HELM PANEL BOARD -AUXILIARY JOYSTICK

8M0071505

This panel board includes parts needed to add Auxiliary Joystick for SC 2.5 Twin (SC 2.5 - QSB)

INERTIAL MEASUREMENT UNIT

8M6002180

The Inertial Measurement Unit (IMU) contains software version 3.1.

The IMU is used with all Joystick Piloting applications - Outboard, Sterdrive and Zeus.

SMARTCRAFT GPS ANTENNA 400



8M0091565

SmartCraft GPS Antenna (4.0.12SC) Used with SmartTow Pro SC1000 gauges, MercMonitors, and VesselViews 4 and 7.

Sends CAN H and CAN P GPS data for use with GPS SmartTow and Joystick Piloting boats with Auto Pilot. Software 4.0.12SC

CAN H GATEWAY



8M0095543

Utilized in Joystick applications (typically included in the full rigging kit), provides an interface between CAN H GPS & IMU and the NMEA2000 device (approved chart plotter). Allows for adavanced features such at Waypoint Sequencing, AutoHeading and SkyHook

Can be used on any Joystick application as an interface between CAN H and NMEA0183 OR NMEA2000. Not required for systems with the VesselView 4 or 7 display RTM5 software release that are using a NMEA2000 approved chartplotter

JOYSTICK: MAIN POWER RELAY HARNESS - 20 FT.



84-897345T08

Powers CCMs and TVMs for Joystick installations. Used in addition to 5 amp clean power harness. (20 ft. long)

JOYSTICK: MAIN POWER RELAY HARNESS - 40 FT.



84-879172T85

Powers CCMs and TVMs for Joystick installations. Used in addition to 5 amp clean power harness. (40 ft. long)

JOYSTICK: MAIN POWER RELAY HARNESS - 60 FT.

84-879172T86

Powers CCMs and TVMs for Joystick installations. Used in addition to 5 amp clean power harness. 60 ft. long

MAIN POWER RELAY HARNESS (DUAL HELM)



84-8M0047753

Power for upper helm CCM for Joystick installations. Tees off of lower helm main power relay harness. (20 ft. long)

84-8M0047754

Power for upper helm CCM for Joystick installations. Tees off of lower helm main power relay harness. (40 ft. long)

84-8M0047755

Power for upper helm CCM for Joystick installations. Tees off of lower helm main power relay harness. (60 ft. long)

POWER STEERING HOSE KITS-JOYSTICK PILOTING

JOYSTICK PILOTING STEERING HOSES

Image not Available.

32-8M0078210

Kit includes two hoses of the same length (10 ft) for use on Joystick Piloting. The hoses will route from the pump to the bulk head fitting.

Can be used on Verado 250-350 HP and 400R Joystick installations.

JOYSTICK PILOTING HOSES

32-8M0078211

Kit includes two hoses of the same length (12 ft) for use on Joystick Piloting. The hoses will route from the pump to the bulk head fitting.

Can be used on Verado 250-350 HP and 400R Joystick installations.

32-8M0078212

Kit includes two hoses of the same length (14 ft) for use on Joystick Piloting. The hoses will route from the pump to the bulk head fitting.

Can be used on Verado 250-350 HP and 400R Joystick installations.

32-8M0078213

Kit includes two hoses of the same length (16 ft) for use on Joystick Piloting. The hoses will route from the pump to the bulk head fitting.

Can be used on Verado 250-350 HP and 400R Joystick installations.

32-8M0078214

Kit includes two hoses of the same length (18 ft) for use on Joystick Piloting. The hoses will route from the pump to the bulk head fitting.

Can be used on Verado 250-350 HP and 400R Joystick installations.

32-8M0078215

Kit includes two hoses of the same length (20 ft) for use on Joystick Piloting. The hoses will route from the pump to the bulk head fitting.

Can be used on Verado 250-350 HP and 400R Joystick installations.

32-8M0078216

Kit includes two hoses of the same length (22 ft) for use on Joystick Piloting. The hoses will route from the pump to the bulk head fitting.

Can be used on Verado 250-350 HP and 400R Joystick installations.

32-8M0078217

Kit includes two hoses of the same length (24 ft) for use on Joystick Piloting. The hoses will route from the pump to the bulk head fitting.

Can be used on Verado 250-350 HP and 400R Joystick installations.

32-8M0032520

Kit includes two hoses of same length (26 ft) for use on Joystick Piloting. The hoses will route from the pump to the bulk head fitting.

Can be used on Verado 250-350 HP and 400R Joystick installations.

32-8M0032530

Kit includes two hoses of the same length (28 ft) for use on Joystick Piloting. The hoses will route from the pump to the bulk head fitting.

Can be used on Verado 250-350 HP and 400R Joystick installations.

32-8M0032547

Kit includes two hoses of the same length (30 ft) for use on Joystick Piloting. The hoses will route from the pump to the bulk head fitting.

Can be used on Verado 250-350 HP and 400R Joystick installations.

32-8M0032630

Kit includes two hoses of the same length (32 ft) for use on Joystick Piloting. The hoses will route from the pump to the bulk head fitting.

Can be used on Verado 250-350 HP and 400R Joystick installations.

DTS RIGGING

SMARTCRAFT AND DTS APPLICATION INFORMATION

Mercury Marine strongly recommends that boat builders and dealers use only Mercury Marine brand SmartCraft and DTS accessories. The throttle and shift functions on a boat are safety critical components. Mercury Marine validated the design and manufacture of the various SmartCraft and DTS accessories sold by Mercury Marine through an extensive product qualification testing protocol. Each of the Mercury Marine accessories for these systems has pass through that qualification process. It is not possible for Mercury Marine to test its systems with all of the accessories manufactured and sold by other entities. As a result, if a boat builder or dealer chooses to disregard the recommendation that only Mercury Marine accessories be used, the boat builder or dealer should adhere to specifications provided by Mercury Marine for all non-Mercury Marine components which interface with the Mercury Marine SmartCraft and/or DTS System. Documentation exhibiting compliance with these specifications should be submitted and approved by Mercury Marine prior to the finished product being released for sale. The Mercury Marine Limited Warranty does not provide coverage for damage caused by the use of accessories or parts not manufactured or sold by Mercury Marine.

DTS RIGGING KITS

The DTS complete master rigging kits listed in this section are for the 2007 DTS engines and newer. The DTS kits for older engines can be found in the "DTS Command Module Kits" section of this book. Please note, when buying the "DTS Command Module Kits" the control will need to be purchased separately. The controls can be found in the "Digital Throttle and Shift Controls" section of this book.

RIGGING KIT- DTS / PANEL-CHROME ERC



892984K31

This kit includes Chrome Panel ERC, Command module kit, Four way junction box, Boat harness to connect fuel tanks and paddle wheel and the Accessory Power Relay harness.

This kit is for 2007 DTS Engines and newer. For MCM engines a serial number break is needed to define use.

RIGGING KIT- DTS / PANEL (BLACK ERC)



892984K32

This kit includes Black Panel ERC, Command module kit, Four way junction box, Boat harness to connect fuel tanks and paddle wheel and the Accessory Power Relay harness.

This kit is for 2007 DTS Engines and newer. For MCM engines a serial number break is needed to define use.

RIGGING KIT - DTS - SLIM CONSOLE



6946-8M0079498

This kit includes Slim Console ERC, Command module kit, Four way junction box, Boat harness to connect fuel tanks and paddle wheel and Accessory Power Relay harness. The CAN pad features engine Start/Stop button, Dock mode button, Helm transfer button, Throttle only button, and a Mercury global dimming button. The trim function is located on the port handle.

This kit is for 2007 DTS Engines and newer. For MCM engines a serial number break is needed to define use.

RIGGING KIT - DTS - CONSOLE DUAL



8M0079499

This kit includes Dual Console ERC, Command module kit, 2 Four way junction boxes, 2 Boat harness to connect fuel tanks and paddle wheel and 2 Accessory Power Relay Harnesses. The CAN pad features individual engine trim buttons, Dock mode button, Helm transfer button, Throttle only button, Sync button and Mercury global dimming button. The control also features a Trim-all engine function which is located on the port handle.

This kit is for 2007 DTS Engines and newer. For MCM engines a serial number break is needed to define use.

RIGGING KIT - DTS-SHADOW MODE - TRIPLE



8M0079500

This kit includes Dual Console Triple Shadow Mode ERC, Command module kit, 4 Four way junction boxes, 1 Adapter harness, 2 Boat harness to connect fuel tanks and paddle wheel, 1 CAN P, 1 CAN H, 3 link harnesses, 1 Triple start/stop kit, 1 Triple lanyard kit and 1 Accessory Power Relay Harness. The CAN pad features include individual engine trim buttons, Dock mode button, Helm transfer button, Throttle only button, Sync button and Mercury global dimming button. The control also features a Trim-all engine function which is located on the port handle.

This kit is for 2007 DTS Engines and newer. For MCM engines a serial number break is needed to define use.

RIGGING KIT - DTS-SHADOW MODE - QUAD



8M0079501

This kit includes Dual Console Quad Shadow Mode ERC, Command module kits with matched Keyswitch kit, 5 Four way junction boxes, 2 Boat harness to connect fuel tanks and paddle wheel, 1 Adapter, 1 Lanyard quad kit, 1 CAN H link harness, 1 Starboard and 1 Port start/stop kit, and 1 Accessory Power Relay Harness. The CAN pad features individual engine trim buttons, Dock mode button, Helm transfer button, Throttle only button, Sync button and a Mercury global dimming button. The control also features a Trim-all engine function which is located on the port handle.

This kit is for 2007 DTS Engines and newer. For MCM engines a serial number break is needed to define use.

DTS COMMAND MODULE AND HARNESS KITS

The "DTS Command Module Kits" include: Command module(s), command module harness(es), and Key switch(es). These kits are listed in this section from most current model year and back to 2004 (where still supported). **Controls are sold separately** Controls can be found in the "Digital Throttle and Shift Controls" section of this book.

PANEL MOUNT / SLIM BINNACLE - DTS COMMAND MODULE KIT



84-893377K04

SmartCraft DTS Command Module required for Gen I (2007) and newer DTS systems. Includes DTS Command Module (891661T10), panel mount harness (893377T03), key switch and mounting hardware. Used with 892984A01 and 892984A02 Panel Mount Controls, and 8M0079290 and 8M0079291 Slim Binnacle Controls.

Gen I (2007) DTS Engines and newer. MCM requires serial number break to define use.

PANEL MOUNT CONTROL- DTS COMMAND MODULE KIT



84-893377K03

SmartCraft DTS Command Module (891661T05) required for 2006 DTS systems. Includes DTS Command Module, panel mount harness, key switch and mounting hardware. Used with 892984A01 and 892984A02 Panel Mount Controls.

2006 DTS engines only

PANEL MOUNT CONTROL- DTS COMMAND MODULE KIT



84-893377K01

SmartCraft DTS Command Module required for 2005 DTS systems. Includes DTS Command Module (891661T03), panel mount harness, key switch and mounting hardware. Used with 892984A01 and 892984A02 Panel Mount Controls. (uses 891661T03)

2005 DTS engines

PANEL ERC FOOT THROTTLE- DTS COMMAND MODULE KIT



84-893377K02

SmartCraft DTS Command Module required for 2005 DTS systems. Includes DTS Command Module (891661T04) for Foot Throttle, Panel Mount Harness, Key Switch and mounting hardware. Used with 892984A01 and 892984A02 Panel Mount Controls with special Foot Throttle Software.

2005 DTS engines only

PANEL MOUNT DTS COMMAND MODULE KIT



84-891926K01

SmartCraft DTS Command Module required for 2004 DTS systems. Includes DTS Command Module (891661T01), key switch and mounting hardware. Used with 883465a 1 and 883465a2 Panel Mount Controls.

2004 OptiMax 225 DTS outboards and 8.1L/496 Mag MerCruiser DTS sterndrive engines.

SLIM BINNACLE - COMMAND MODULE KIT



84-896372K02

Smartcraft Command Module used on Gen I (2007) DTS engines- Includes command module (891661T10) and command module harness (896372a01), keyswitch (893353A03) and mounting hardware. Used with ERC Slim Binnacle 896609A01

Gen I (2007) DTS Engines and newer. MCM requires serial number break to define use.

SLIM BINNACLE - COMMAND MODULE KIT



84-896372K01

Smartcraft Command Module used on 2006 DTS engines- Includes command module (891661T05) and harness, keyswitch and mounting hardware. Used with ERC Slim Binnacle 896609A01

2006 DTS engines only

SINGLE CONSOLE/ZERO EFFORT COMMAND MODULE KIT

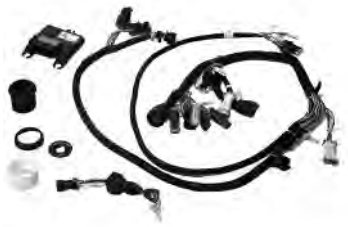

84-892955K04

Smartcraft Command Module used on 2007 (Gen I) DTS engines- Includes command module (891661T06) and command module harness (892955A02), keyswitch(893353A03) and mounting hardware. Used with 877775A08, A10, A12, ERC's and Zero Effort 840712A__ series controls

Gen I (2007) DTS Engines and newer

SINGLE CONSOLE/ZERO EFFORT COMMAND MODULE KIT



84-892955K03

Smartcraft Command Module used on 2006 DTS engines- Includes command module and harness, keyswitch and mounting hardware. Used with 877775A08, A10, A12, ERC's and Zero Effort 840712A__ series controls Does not backfit. (uses 891661005)

2006 DTS engines only

SINGLE CONSOLE/ZERO EFFORT COMMAND MODULE KIT



84-892955K01

Smartcraft Command Module used on 2005 DTS engines- Includes command module and harness, keyswitch and mounting hardware. Used with 877775A08, A10, A12, ERC's and Zero Effort 840712A__ series controls Does not backfit. (uses 891661003)

2005 DTS outboards and 8.1L/496 Mag DTS MCM/ MIE
Serial number OW040000 thru 0W649999

SINGLE CONSOLE/ZERO EFFORT DTS COMMAND MODULE KIT

84-891924K01

SmartCraft DTS Command Module required for 2004 DTS systems. Includes DTS Command Module, key switch and mounting hardware. Used with 877775a2, 877775a4, 877774a6 Single Handle Console Mount Controls or Single engine Zero Effort controls- 840712a1 thru a8

2004 OptiMax 225 DTS outboards and 8.1L/496 Mag MerCruiser DTS sterndrive and inboard engines.

DUAL CONSOLE/ZERO EFFORT DTS COMMAND MODULE KIT



84-893378K04

SmartCraft DTS Command Module required for 2007 (Gen I) DTS systems. Includes DTS Command Module(2 each- 891661T06),matched key switch (1 each-893353A04)),command module harness (893378A02) and mounting hardware. Used with 877775a07, 877775a11, 877775a09 Dual Engine Console Mount Controls or Dual Engine Zero Effort Controls 840714A__ series

Gen I (2007) DTS Engines and newer

DUAL CONSOLE/ZERO EFFORT DTS COMMAND MODULE KIT



84-893378K03

SmartCraft DTS Command Module required for 2006 DTS systems. Includes DTS Command Module(2), key switch(2), harness and mounting hardware. Used with 877775a07, 877775a11, 877775a09 Dual Engine Console Mount Controls or Dual Engine Zero Effort Controls 840714A__ series

2006 DTS engines only

DUAL CONSOLE/ZERO EFFORT DTS COMMAND MODULE KIT



84-893378K01

SmartCraft DTS Command Module required for 2005 DTS systems. Includes DTS Command Module(2), key switch(2), harness and mounting hardware. Used with 877775a07, 877775a11, 877774a09 Dual Engine Console Mount Controls or Dual Engine Zero Effort Controls 840714A__ series

2005 DTS outboards and 8.1L/496 Mag DTS MCM/ MIE
Serial Number OW 040000 thru 0W649999

COMMAND MODULE TRIPLE



892955K32

This DTS Rigging Kit includes 1 Command Module Kits with matched keys (892955K06 with 3 each 891661T10 and 893353A05 matched keyswitch), 1 Triple Engine Lanyard harness Kit (895725A04), 1 Triple Engine Start/Stop Kit (887767K03), 4 four way junction boxes (878492K14), 2 Boat Harnesses (859743T03),1 Link Cable (84-893452A01), Triple Engine DTS Link Harness (84-896206T15), 4 position dash mounted trim switch, (897635K01), adapter harness (84-896394T01) and 1 Accessory/Relay Harnesses (889611K01). Zero Effort Control and data Harness (892451T/B__ - one per engines to correct length) must be ordered separately.

Gen I (2007) DTS Engines and newer. MCM requires serial number break to define use. For products using Zero Effort Controls

COMMAND MODULE TRIPLE



892955K22

This DTS Rigging Kit includes 3 Command Module Kits with keys (892955K03), 1 Triple Engine Lanyard harness Kit (895725A01), 1 Triple Engine Start/Stop Kit (887767K03), 3 four way junction boxes (878492K14), 3 Boat Harnesses (859743T03), Triple Engine DTS Link Harness (84-896206T15), 4 position dash mounted trim switch, (897635K01), adapter harness (84-896394T01) and 1 Accessory/Relay Harnesses (889611K01). Zero Effort Control and data Harness (892451T/B__ - one per engines to correct length) must be ordered separately.

2006 DTS engines

DUAL CONSOLE/ZERO EFFORT DTS COMMAND MODULE KIT



84-891925K01

SmartCraft DTS Command Module required for 2004 DTS systems. Includes DTS Command Module(2), key switch(2), harness and mounting hardware. Used with 877775a1, 877775a3, 877774a5 Dual Engine Console Mount Controls or Dual Engine Zero Effort Controls 840714A__ series

2004 OptiMax 225 DTS outboards and 8.1L/496 Mag MerCruiser DTS sterndrive and inboard engines.

DTS RIGGING KIT-TRIPLE W/O ZE CONTROL



892955K02

This DTS Rigging Kit includes 3 Command Module Kits with keys (892955K01), 1 Triple Engine Lanyard harness Kit (895725A01), 1 Triple Engine Start/Stop Kit (887767K03), 3 fourway junction boxes (878492K 4), 3 Boat Harnesses (859743T 2), Triple Engine DTS Link Harness (84-896206T01), CAN 1 Link Harness Assy (84-893452A01), and 3 Accessory/Relay Harnesses (889611K01). Zero Effort Control and data Harness (892451T/B__ - one per engines to correct length) must be ordered separately.

2005 DTS engines

COMMAND MODULE KIT- DTS (TRIPLE) SHADOW



84-896377K02

SmartCraft DTS Command Module required for Gen I (2007) and newer DTS systems. Includes DTS Command Module(3) (891661T06),matches key switch kit(1) (893353A05),command module harness(896377t02), DTS link adapter(893452A01) and mounting hardware. Used with ERC 877775A21

Gen I (2007) DTS Engines and newer. MCM requires serial number break to define use.

TRIPLE ENGINE SHADOW MODE DTS COMMAND MODULE KIT



84-896377K01

SmartCraft DTS Command Module required for 2006 DTS systems. Includes DTS Command Module(3), key switch(3). Used with ERC 877775A15

2006 DTS engines

COMMAND MODULE KIT- DTS (QUAD)



84-896377K03

*** ALSO NEED 892955K05 FOR COMPLETE QUAD INSTALL ***
SmartCraft DTS Command Module required for 2007 (Gen I) DTS systems. Includes DTS Command Module(3-891661T10),matches key switch kit(1-893353A06) command Module harness (896377T02), DTs link adapter (893452A01) and mounting hardware. Used with ERC 877775A21.

Gen I (2007) DTS Engines and newer

DTS HELM BOARD KITS (HELM BOARDS ONLY)

HELM BOARD DTS KIT



899859K01

Kit includes J-Box, Command Module Harness, Command Module, Accessory Power Relay and Terminal Strip all components come pre-mounted on plastic board includes mounting hardware for vessel install.

For Dual ERC. DTS GEN I and newer.

HELM BOARD DTS KIT - SLIM



899859K02

Kit includes J-Box, Command Module Harness, Command Module, Accessory Power Relay and Terminal Strip all components come pre-mounted on plastic board includes mounting hardware for vessel install

For Slim Binnacle ERC. DTS GEN I and newer.

HELM BOARD DTS KIT - PANEL / SLIM BINNACLE



899859K03

Kit includes J-Box, Command Module Harness, Command Module, Accessory Power Relay and Terminal Strip all components come pre-mounted on plastic board includes mounting hardware for vessel install

For Single Panel Mount and GEN 2 Slim Binnacle ERC. DTS GEN I and newer.

DTS COMPONENTS

COMMAND MODULE KIT



78-8M0063866

Command Module Kit software version 77. The module can be reprogramed using the CDS - G3 service tool

Match the software version needed with engine feature requirements

77-8M0109482

Command Module Kit software version 80. The module can be reprogramed using the CDS - G3 service tool

Match the software version needed with engine feature requirements

HARDWARE BAG ASSEMBLY



56-820386A85

DIESEL RIGGING

2.0L ENGINE RIGGING KITS

2.0L RIGGING KIT - MECHANCIAL ALPHA

Image not Available.

8M0106703

Rigging kit includes VIP panel, 20 foot power harness, 10 foot vessel extension harness, fuel level harness, e-stop harness, diagnostic port and harness, fuel filter, sterndrive harness, transom hardware, helm harness and 4 way junction box

2.0L Diesel Mechanical Sterndrive (Alpha)

2.0L RIGGING KIT - MECHANICAL BRAVO

8M0106704

Rigging kit includes VIP panel, 20 foot power harness, 10 foot vessel extension harness, fuel level harness, e-stop harness, diagnostic port and harness, fuel filter, sterndrive harness, transom hardware, helm harness and 4 way junction box

2.0L Diesel Mechanical Sterndrive (Bravo)

2.0L RIGGING KIT - DTS BRAVO

8M0106702

Rigging kit includes VIP panel, 20 foot power harness, 10 foot vessel extension harness, fuel level harness, e-stop harness, diagnostic port and harness, fuel filter, sterndrive harness, transom hardware and shift plate

2.0L Diesel DTS Sterndrive (Bravo)

2.0L RIGGING KIT - DTS INBOARD

8M0106705

Rigging kit includes VIP panel, 20 foot power harness, 10 foot vessel extension harness, fuel level harness, e-stop harness, diagnostic port and harness, inboard harness, fuel filter, sea water filter, thru hull fitting and hose

2.0L Diesel DTS Inboard

2.0L RIGGING KIT - MECHANICAL INBOARD

8M0106706

Rigging kit includes VIP panel, 20 foot power harness, 10 foot vessel extension harness, fuel level harness, e-stop harness, diagnostic port and harness, inboard harness, fuel filter, sea water filter, thru hull fitting and hose, helm harness and 4 way junction box

2.0L Diesel Mechanical Inboard

PANELS DTS

TDI 3.0L 260 HP ENGINE ASSEMBLY KIT - DTS STERNDRIVE

98-8M0078877

Engine Assembly Kit includes Drive Lube Monitor,MerCathode,Shift Actuator, Fuel Module, Exhaust Bullhorn, Literature Kit, Vessel Adapter Assembly and Vessel Sensor Harness.
Must be used with the correct engine during installation

Mercury Diesel TDI 3.0L 260 HP DTS Sterndrive

TDI 4.2L 335 HP ENGINE ASSEMBLY KIT - DTS STERNDRIVE

98-8M0078875

Engine Assembly Kit includes Drive Lube Monitor,MerCathode,Shift Actuator, Fuel Module, Exhaust Bullhorn, Literature Kit, Vessel Adapter Assembly and Vessel Sensor Harness.
Must be used with the correct engine during installation

Mercury Diesel TDI 4.2L 335 HP DTS Sterndrive

TDI 4.2L 370 HP ENGINE ASSEMBLY KIT - DTS STERNDRIVE

98-8M0078873

Engine Assembly Kit includes Drive Lube Monitor,MerCathode,Shift Actuator, Fuel Module, Exhaust Bullhorn, Literature Kit, Vessel Adapter Assembly and Vessel Sensor Harness.
Must be used with the correct engine during installation

Mercury Diesel TDI 4.2L 370 HP DTS Sterndrive

TDI 3.0L 260 HP ENGINE ASSEMBLY KIT - DTS INBOARD

98-8M0078885

Engine Assembly Kit includes Fuel Module, Literature Kit, Vessel Adapter Assembly, Vessel Sensor Harness, Drive Application Harness and Gear Actuation Harness. Must be used with the correct engine during installation

Mercury Diesel TDI 3.0L 260 HP DTS Inboard

TDI 4.2L 335 HP ENGINE ASSEMBLY KIT - DTS INBOARD

98-8M0078884

Engine Assembly Kit includes Fuel Module, Literature Kit, Vessel Adapter Assembly, Vessel Sensor Harness, Drive Application Harness and Gear Actuation Harness. Must be used with the correct engine during installation

Mercury Diesel TDI 4.2L 335 HP DTS Inboard

TDI 4.2L 370 HP ENGINE ASSEMBLY KIT - DTS INBOARD

98-8M0078883

Engine Assembly Kit includes Fuel Module, Literature Kit, Vessel Adapter Assembly, Vessel Sensor Harness, Drive Application Harness and Gear Actuation Harness. Must be used with the correct engine during installation

Mercury Diesel TDI 4.2L 370 HP DTS Inboard

PANELS NON DTS

TDI 3.0L 260 HP ENGINE ASSEMBLY KIT - MECH STERNDRIVE

98-8M0078878

Engine Assembly Kit includes - Drive Lube Monitor, MerCathode, Shift Actuator, Exhaust Bullhorn, Literature Kit, Vessel Adapter Assembly and Vessel Sensor Harness.
Must be used with the correct engine during installation

Mercury Diesel TDI 3.0L 260 HP Mechanical Sterndrive

TDI 4.2L 335 HP ENGINE ASSEMBLY KIT - MECH STERNDRIVE

98-8M0078876

Engine Assembly Kit includes - Drive Lube Monitor, MerCathode, Shift Actuator, Exhaust Bullhorn, Literature Kit, Vessel Adapter Assembly and Vessel Sensor Harness.
Must be used with the correct engine during installation

Mercury Diesel TDI 4.2L 335 HP Mechanical Sterndrive

TDI 4.2L 370 HP ENGINE ASSEMBLY KIT - MECH STERNDRIVE

98-8M0078874

Engine Assembly Kit includes - Drive Lube Monitor, MerCathode, Shift Actuator, Exhaust Bullhorn, Literature Kit, Vessel Adapter Assembly and Vessel Sensor Harness.
Must be used with the correct engine during installation

Mercury Diesel TDI 4.2L 370 HP Mechanical Sterndrive

TDI 3.0L 260 HP ENGINE ASSEMBLY KIT - MECH INBOARD

98-8M0078886

Engine Assembly Kit includes- Literature Kit, Vessel Adapter Assembly, Vessel Sensor Harness, Drive Application Harness and Gear Actuation Harness. Must be used with the correct engine during installation

Mercury Diesel TDI 3.0L 260 HP Mechanical Inboard

MERCURY DIESEL MECHANICAL HELM HARNESS



84-8M0084296

Non DTS Helm Harness

Mercury Diesel: Mechanical versions of TDI 3.0L and 4.2L, Tier 2 and Tier 3 (use one per engine at the helm)

DIESEL TDI RIGGING

MERCURY DIESEL TDI STERNDRIVE HARNESS KIT

8M0099152

Kit to simplify ordering engine rigging components specific to a TDI Sterndrive application - contains a 3 meter engine to VAA harness, 20 foot engine unswitched power harness, 10 foot vessel sensor extension harness, fuel level harness, 10 foot trim pump/sender extension harness, a diagnostic port and a 3 foot diagnostic yellow CAN cable. Does not include helm rigging (control, harnessing, gauges, etc).

Can be used on all Mercury Diesel TDI sterndrive packages.

MERCURY DIESEL TDI AXIUS HARNESS KIT



8M0099153

Kit to simplify ordering engine rigging components specific to a TDI Axius application - contains a 3 meter engine to VAA harness, 20 foot engine unswitched power harness, 10 foot vessel sensor extension harness, fuel level harness, 10 foot trim pump/sender extension harness, a 3 foot diagnostic yellow CAN cable, TVM to VAA cable, 40 foot helm clean power harness, key switch kit and two Axius adapter harnesses. Does not include helm rigging (control, harnessing, gauges, etc).

Use only on Mercury Diesel TDI Axius applications

MERCURY DIESEL TDI INBOARD HARNESS KIT



8M0099154

Kit to simplify ordering engine rigging components specific to a TDI Inboard application - contains a 3 meter engine to VAA harness, 20 foot engine unswitched power harness, 10 foot vessel sensor extension harness, fuel level harness, 10 foot drive application extension harness, a diagnostic port and a 3 foot diagnostic yellow CAN cable. Does not include helm rigging (control, harnessing, gauges, etc).

Can be used on all Mercury Diesel TDI inboard packages.

SIMS MODULE



77-8M0086461

Sim module(Service) with unique software for the engine 100 DTS Sterndrive TDI - V6

77-8M0086455

Sim module(Service) with unique software for the engine 260 DTS Sterndrive TDI - V6

77-8M0086462

Sim module(Service) with unique software for the engine 100 Mech Sterndrive TDI - V6

77-8M0086456

Sim module(Service) with unique software for the engine 230 DTS Sterndrive TDI - V6

77-8M0086459

Sim module(Service) with unique software for the engine 230 Mech Sterndrive TDI - V6

77-8M0086454

Sim module(Service) with unique software for the engine 260 DTS Sterndrive TDI - V6

77-8M0086465

Sim module(Service) with unique software for the engine 230 DTS Inboard TDI - V6 (4000 RPM)

77-8M0086467

Sim module(Service) with unique software for the engine 230 Mech Inboard TDI - V6 (4000 RPM)

77-8M0086469

Sim module(Service) with unique software for the engine 230 Mech Inboard TDI - V6 (3500 RPM)

77-8M0086463

Sim module(Service) with unique software for the engine 260 DTS Inboard TDI - V6

77-8M0086464

Sim module(Service) with unique software for the engine 260 Mech Inboard TDI - V6

77-8M0041733

Sim module(Service) with unique software for the engine
335 DTS Sterndrive TDI - V8

77-8M0041757

Sim module(Service) with unique software for the engine
335 Mech Sterndrive TDI - V8

77-8M0041718

Sim module(Service) with unique software for the engine
370 DTS Sterndrive TDI - V8

77-8M0041734

Sim module(Service) with unique software for the engine
370 Mech Sterndrive TDI - V8

77-8M0041674

Sim module(Service) with unique software for the engine
335 DTS Inboard TDI - V8

77-8M0041671

Sim module(Service) with unique software for the engine
370 DTS Inboard TDI - V8

MERCURY DIESEL TDI ENGINE HARNESS - ENGINE TO VAA



84-8M0066846

2 meter engine to VAA harness
Mercury Diesel TDI 3.0L and 4.2L Engines

8M0066847

3 meter engine to VAA harness
Mercury Diesel TDI 3.0L and 4.2L Engines

8M0066848

4 meter engine to VAA harness
Mercury Diesel TDI 3.0L and 4.2L Engines

MERCURY DIESEL TDI MECHANICAL JOHNNY THROTTLE EXTENSION HARNESS



84-8M0079850

Extension harness - Throttle Mechanical - 10 ft
Mercury Diesel TDI 3.0L and 4.2L Diesels, inlcuded in the mechanical engine assembly kit

84-8M0079851

Extension harness - Throttle Mechanical - 20 ft
Mercury Diesel TDI 3.0L and 4.2L Diesels, inlcuded in the mechanical engine assembly kit

MERCURY DIESEL TDI LIFT PUMP HARNESS EXTENSION



84-8M0079847

Extension Harness, 20 ft.
Used in conjunction with off engine Racor lift pump, included in mechanical engine assembly kits

MERCURY DIESEL TDI VESSEL SENSOR HARNESS



8M0079848

Harness - Vessel Sensor
Mercury Diesel TDI 3.0L and 4.2L Diesels, included in the engine assembly kit

MERCURY DIESEL MECHANICAL HELM HARNESS



84-8M0084296

Non DTS Helm Harness
Mercury Diesel: Mechanical versions of TDI 3.0L and 4.2L, Tier 2 and Tier 3 (use one per engine at the helm)

MERCURY DIESEL TDI DRIVE APPLICATION EXTENSION HARNESS



84-8M0080191

5 foot TDI Drive Application Extension Harness
Mercury Diesel TDI 3.0L and 4.2L Engines

MERCURY DIESEL TDI DRIVE APPLICATION EXTENSION HARNESS

84-8M0080192

10 foot TDI Drive Application Extension Harness
Mercury Diesel TDI 3.0L and 4.2L Engines

MERCURY DIESEL TDI DRIVE APPLICATION EXTENSION HARNESS



84-8M0080193

15 foot TDI Drive Application Extension Harness
Mercury Diesel TDI 3.0L and 4.2L Engines

84-8M0080194

20 foot TDI Drive Application Extension Harness
Mercury Diesel TDI 3.0L and 4.2L Engines

POWER HARNESS



84-899887T13

Engine unswitched power harness (10 ft)
All diesels - both Non DTS and DTS

84-899887T14

Engine unswitched power harness (20 ft)
All diesels - both Non DTS and DTS

VESSEL SENSOR EXTENSION HARNESS



84-899888T21

Vessel sensor extension harness (Optional) 5 feet
All Diesel products Non DTS and DTS including Axius

84-899888T22

Vessel sensor extension harness (Optional) 10 feet
All Diesel products Non DTS and DTS including Axius

84-899888T23

Vessel sensor extension harness (Optional) 15 feet
All Diesel products Non DTS and DTS including Axius

84-899887T17

Vessel sensor extension harness (Optional) 20 feet
All Diesel products Non DTS and DTS including Axius

MERCURY DIESEL TDI AXIUS HARNESS ADAPTER



84-8M0079849

Harness adapter Axius
Mercury Diesel TDI 3.0L and 4.2L Sterndrive

MERCURY DIESEL TDI DRIVE LUBE MONITOR EXTENSION HARNESS



84-8M0080787

Harness Extension - Drive Lube Monitor
Mercury Diesel TDI 3.0L and 4.2L Sterndrive

SHIFT ACTUATOR HARNESS



84-879312T12

Shift actuation harness.
Sterndrive harness extension

EXTENSION HARNESS- NEUTRAL SAFETY



84-899887T01

Harness extension used with neutral safety switch. (DTS Shift Actuator)
Sterndrives (DTS)

SWITCH EMERGENCY STOP



8M0068875
E-Stop switch for emergency stop
All diesel engines

SWITCH EMERGENCY STOP



84-8M6000699
E-Stop switch for emergency stop
All diesel engines (SC 2.5)

KEYSWITCH EXTENSION HARNESS



84-879312T77
Keyswitch Extension Harness - 20 feet
All Diesel engines

84-879312T78
Keyswitch Extension Harness - 30 feet
All Diesel engines

84-879312T79
Keyswitch Extension Harness - 40 feet
All Diesel engines

84-879312T80
Keyswitch Extension Harness - 50 feet
All Diesel engines

84-879312T81
Keyswitch Extension Harness - 60 feet
All Diesel engines

84-879312T82
Keyswitch Extension Harness - 70 feet
All Diesel engines

84-879312T83
Keyswitch Extension Harness - 80 feet
All Diesel engines

VESSEL PANELS DTS

VESSEL INTERFACE PANEL



84-8M0070056
Vessel interface Panel for QSB/QSC/QSL/QSM diesel engines that includes a SIM and loaded software for a specific engine family. (White Box)
VIP communicates diesel engine data
DTS Inboard (SC 2.2)

8M0086566
Vessel interface panel for QSB/QSC/QSL/QSM diesel engines that includes a SIM and loaded software for a specific engine family. (White Box)
VIP communicates diesel engine data
DTS Inboard (SC 2.5)

84-8M0070058
Vessel interface panel for QSB/QSC/QSL/QSM diesel engines that includes a SIM and loaded software for a specific engine family. (White Box)
VIP communicates diesel engine data
DTS Inboard + Troll (SC 2.2)

8M0086567
Vessel interface panel for QSB/QSC/QSL/QSM diesel engines that includes a SIM and loaded software for a specific engine family. (White Box)
VIP communicates diesel engine data
DTS Inboard + Troll (SC 2.5)

VESSEL INTERFACE PANEL - QSB/QSC/QSL/QSM

84-8M0070060
Vessel interface panel for QSB/QSC/QSL/QSM diesel engines that includes a SIM and loaded software for a specific engine family. (White Box)
VIP communicates diesel engine data.
NON-DTS Inboard (SC 2.2), QSB/QSC/QSL/QSM

VESSEL PANEL -VIP - QSB/QSC/QSL/QSM

8M0086565
Vessel interface panel for QSB/QSC/QSL/QSM diesel engines that includes a SIM and loaded software for a specific engine family. (White Box)
VIP communicates diesel engine data
NON-DTS Inboard (SC 2.5)

84-8M0070062
Vessel interface panel for QSB/QSC/QSL/QSM diesel engines that includes a SIM and loaded software for a specific engine family. (White Box)
VIP communicates diesel engine data
DTS Sterndrive (SC 2.2)

77-8M0078038
Vessel interface panel for QSB/QSC/QSL/QSM diesel engines that includes a SIM and loaded software for a specific engine family. (White Box)
VIP communicates diesel engine data
DTS Sterndrive (SC 2.5)

VESSEL INTERFACE PANEL - QSB/QSC/QSL/QSM

84-8M0070063
Vessel interface panel for QSB/QSC/QSL/QSM diesel engines that includes a SIM and loaded software for a specific engine family. (White Box)
VIP communicates diesel engine data
NON-DTS Sterndrive (SC 2.2), QSB/QSC/QSL/QSM

VESSEL PANEL -VIP - QSB/QSC/QSL/QSM

77-8M0078039
Vessel interface panel for QSB/QSC/QSL/QSM diesel engines that includes a SIM and loaded software for a specific engine family. (White Box)
VIP communicates diesel engine data
NON-DTS Sterndrive (SC 2.5)

VESSEL PANEL KIT



8M0070435

VIP Kit with Harness, VIP and Operations Manual Flashed with software. (Includes 8M0070064)

Zeus Twin (SC 2.2)

VESSEL PANEL KIT



8M0072599

VIP Kit with Harness, VIP and Operations Manual Flashed with software. (Includes 8M00787774)

Zeus Twin (SC 2.5)

VESSEL PANEL -VIP - QSB/QSC/QSL/QSM



84-8M0070064

Vessel integration panel for QSB/QSC/QSL/QSM diesel engines that includes a SIM and loaded software for a specific engine family. (White Box)
VIP communicates diesel engine data

Zeus (SC 2.2)

8M0088792

Vessel integration panel for QSB/QSC/QSL/QSM diesel engines that includes a SIM and loaded software for a specific engine family. (White Box)
VIP communicates diesel engine data

Zeus (SC 2.5)

VESSEL INTERFACE PANEL

84-8M0070055

Vessel integration panel for QSB/QSC/QSL/QSM diesel engines that includes a SIM and loaded software for a specific engine family. (White Box)
VIP communicates diesel engine data .

DTS Hydra Triple Zeus (SC 3.0)

VESSEL PANEL -VIP - QSB/QSC/QSL/QSM

84-8M0070053

Vessel integration panel for QSB/QSC/QSL/QSM diesel engines that includes a SIM and loaded software for a specific engine family. (White Box)
VIP communicates diesel engine data

DTS Hydra Quad Zeus (SC 3.0)

VESSEL INTERFACE PANEL - NO SIM

84-8M6001456

Service Vessel interface panel without Sim. Used to service all VIP boxes for single and twin models. (White Box)

QSB/QSC/QSL/QSM Single and Twin engines (Inboard, Sterndrive and Zeus)

84-8M6001455

Service Vessel interface panel without Sim. Used to service all VIP boxes for triple models. (White Box)

QSB/QSC/QSL/QSM Triple engines (Zeus)

84-8M6001454

Service Vessel interface panel without Sim. Used to service all VIP boxes for Quad models. (White Box)

QSB/QSC/QSL/QSM Quad engines (Zeus)

PANELS DTS

MERCURY DIESEL VESSEL INTERFACE PANEL - DTS INBOARD



84-8M0070066

Vessel Inteface Panel: includes a SIM and loaded software for a specific engine family. (White Box)
VIP communicates diesel engine data

Mercury Diesel - DTS Inboard (SC 2.2), Tier 2 (2.0L, 2.8L and 4.2L inline engines)

MERCURY DIESEL VESSEL INTERFACE PANEL - DTS INBOARD (TROLL)

84-8M0070068

Vessel Interface Panel: includes a SIM and loaded software for a specific engine family. (White Box)
VIP communicates diesel engine data.

Mercury Diesel - DTS Inboard + Troll (SC 2.2), Tier 2 (2.0L, 2.8L and 4.2L inline engines)

MERCURY DIESEL VESSEL INTERFACE PANEL - DTS STERNDRIVE

84-8M0070069

Vessel Interface Panel: includes a SIM and loaded software for a specific engine family. (White Box)
VIP communicates diesel engine data

Mercury Diesel - DTS Sterndrive (SC 2.2), Tier 2 (2.0L, 2.8L and 4.2L inline engines)

MERCURY DIESEL VESSEL INTERFACE PANEL - AXIUS GEN II

84-8M0070070

Vessel Interface Panel: includes a SIM and loaded software for a specific engine family. (White Box)
VIP communicates diesel engine data

Mercury Diesel - Axius Gen II (SC 2.5), Tier 2 (2.0L, 2.8L and 4.2L inline engines)

VESSEL INTERFACE PANEL - NO SIM

84-8M6000701

service Vessel Interface Panel without Sim. Used to service all VIP boxes DTS models. (White Box)

DTS QSD engines (Inboard, Sterndrive and Axius)

PANELS NON DTS

VESSEL INTERFACE PANEL - QSB/QSC/QSL/QSM



84-8M0070060

Vessel interface panel for QSB/QSC/QSL/QSM diesel engines that includes a SIM and loaded software for a specific engine family. (White Box)
VIP communicates diesel engine data.

NON-DTS Inboard (SC 2.2), QSB/QSC/QSL/QSM

VESSEL PANEL -VIP - QSB/QSC/QSL/QSM

8M0086565

Vessel interface panel for QSB/QSC/QSL/QSM diesel engines that includes a SIM and loaded software for a specific engine family. (White Box)
VIP communicates diesel engine data

NON-DTS Inboard (SC 2.5)

VESSEL INTERFACE PANEL - QSB/QSC/QSL/QSM

84-8M0070063

Vessel interface panel for QSB/QSC/QSL/QSM diesel engines that includes a SIM and loaded software for a specific engine family. (White Box)
VIP communicates diesel engine data

NON-DTS Sterndrive (SC 2.2), QSB/QSC/QSL/QSM

VESSEL INTERFACE PANEL - NO SIM

84-8M6001456

Service Vessel interface panel without Sim. Used to service all VIP boxes for single and twin models. (White Box)

QSB/QSC/QSL/QSM Single and Twin engines (Inboard, Sterndrive and Zeus)

SIM MODULE - SERVICE ONLY



8M0050264

Module (48 Sim) for service replacement for vessel interface panels (VIP) Has service only start up software.

All Diesel Current VIP (QSD/QSB/QSC/QSL/QSM)

MERCURY DIESEL VESSEL INTERFACE PANEL - MECH INBOARD



84-8M0070071

Vessel Interface Panel: includes a SIM and loaded software for a specific engine family. (White Box)
VIP communicates diesel engine data

Mercury Diesel - Mechanical Inboard (SC 2.2), Tier 2 (2.0L, 2.8L and 4.2L inline engines)

MERCURY DIESEL VESSEL INTERFACE PANEL - MECH STERNDRIVE

84-8M0070072

Vessel Interface Panel: includes a SIM and loaded software for a specific engine family. (White Box)
VIP communicates diesel engine data

Mercury Diesel - Mechanical Sterndrive (SC 2.2), Tier 2 (2.0L, 2.8L and 4.2L inline engines)

VESSEL INTERFACE PANEL - NO SIM

84-8M6000703

Service Vessel Interface Panel without Sim. Used to service all VIP boxes for Non DTS models. (White Box)

Non DTS QSD engines (Inboard and Sterndrives)

VESSEL INTEGRATION PANEL (VIP)- SERVICE



8M2004361

Service Panel with SIMS (service software)

QSD Non DTS -Inboard and Sterndrive

SIMS MODULE- SERVICE

8M2004362

Sims Only with software (service software)

QSD Non DTS - Inboard (SC 2.0)

8M2004360

Sims Only with software (service software)

QSD Non DTS - Sterndrive (SC 2.0)

VESSEL INTEGRATION PANEL (VIP)- NO SIMS



8M2004358
Service replacement - with complete software loaded
QSD Non DTS-Inboard / Jet (non current - SC 2.0)

VESSEL INTEGRATION PANEL (VIP)- SERVICE



8M2004359
Service replacement - with complete software loaded
QSD Non DTS - Sterndrive (non current SC 2.0)

VIP MODULES -INTERFACE PANELS

VIP MODULE WITH SOFTWARE



77-8M0075826
VIP Module loaded with specific software
QSD Inboard SC 2.2 DTS and QSB, QSC and QSM Inboard SC 2.2 DTS

8M0089513
VIP Module loaded with specific software
QSB, QSC, QSM Inboard SC 2.5 DTS

77-8M0075829
VIP Module loaded with specific software
QSD Inboard Plus Troll SC 2.2 DTS and QSB,QSC,QSM Inboard Plus Troll SC 2.2 DTS

8M0089514
VIP Module loaded with specific software
QSB,QSC,QSM Inboard Plus Troll SC 2.5 DTS

77-8M0075831
VIP Module loaded with specific software
QSB,QSC, QSM Inboard SC 2.2 Non DTS

8M0089515
VIP Module loaded with specific software
QSB,QSC,QSM Inboard SC 2.5 Non DTS

77-8M0075833
VIP Module loaded with specific software
QSD Sterndrive SC 2.2 DTS and QASB,QSC,QSM Sterndrive SC 2.2 DTS

VIP MODULE

77-8M0078044
VIP Modules with Software
QSB/QSC/QSL/QSM Sterndrive DTS SC 2.5

VIP MODULE STERNDRIVE NON DTS SC 2.5

77-8M0078045
VIP Modules with Software
QSB/QSC/QSL/QSM Sterndrive Non DTS SC 2.5

VIP MODULE WITH SOFTWARE

77-8M0075836
VIP Module loaded with specific software
QSB,QSC,QSM Zeus SC 2.2 DTS

8M0089516
VIP Module loaded with specific software
QSB,QSC,QSM Zeus SC 2.5 DTS

77-8M0075824
VIP Module loaded with specific software
Zeus Hydra Triple and Quad SC 3.0 DTS

MERCURY DIESEL VESSEL INTERFACE PANEL - MECH INBOARD



84-8M0070071
Vessel Interface Panel: includes a SIM and loaded software for a specific engine family. (White Box)
VIP communicates diesel engine data
Mercury Diesel - Mechanical Inboard (SC 2.2), Tier 2 (2.0L, 2.8L and 4.2L inline engines)

VIP MODULE WITH SOFTWARE



77-8M0075826
VIP Module loaded with specific software
QSD Inboard SC 2.2 DTS and QSB, QSC and QSM Inboard SC 2.2 DTS

77-8M0075829
VIP Module loaded with specific software
QSD Inboard Plus Troll SC 2.2 DTS and QSB,QSC,QSM Inboard Plus Troll SC 2.2 DTS

77-8M0075833
VIP Module loaded with specific software
QSD Sterndrive SC 2.2 DTS and QASB,QSC,QSM Sterndrive SC 2.2 DTS

77-8M0075841
VIP Module loaded with specific software
QSD Axius Gen I SC 2.2 DTS

77-8M0075842

VIP Module loaded with specific software
QSD Axius Gen II SC 2.5 DTS

77-8M0075843

VIP Module loaded with specific software
QSD Inboard SC 2.2 Non DTS

77-8M0075835

VIP Module loaded with specific software
QSD Sterndrive SC 2.2 Non DTS

MERCURY DIESEL 2.0L VESSEL INTERFACE PANEL - DTS INBOARD



8M0089492

Vessel Interface Panel: loaded with software specific to this application.
Mercury Diesel 2.0L - DTS Inboard, Tier 3

MERCURY DIESEL 2.0L VESSEL INTERFACE PANEL - DTS STERNDRIVE

8M0089494

Vessel Interface Panel: loaded with software specific to this application.
Mercury Diesel 2.0L - DTS Sterndrive, Tier 3

MERCURY DIESEL 2.0LVESSEL INTERFACE PANEL - MECH INBOARD

8M0089495

Vessel Interface Panel: loaded with software specific to this application.
Mercury Diesel 2.0L - Mechanical Inboard, Tier 3

MERCURY DIESEL 2.0L VESSEL INTERFACE PANEL - MECH STERNDRIVE (ALPHA)

8M0089496

Vessel Interface Panel: loaded with software specific to this application.
Mercury Diesel 2.0L - Mechanical Sterndrive (Alpha), Tier 3

MERCURY DIESEL 2.0L VESSEL INTERFACE PANEL - MECH STERNDRIVE (BRAVO)



8M0091581

Vessel Interface Panel: loaded with software specific to this application.
Mercury Diesel 2.0L - Mechanical Sterndrive (Bravo), Tier 3

HELM PANEL DTS - MAIN STATION

MERCURY DIESEL SINGLE ENGINE SINGLE HELM PANEL DTS KIT



8M0071418

This helm panel kit is used for the main station for single engine DTS diesel applications. It includes the helm board with CCM loaded software, hardware, helm harness, start/stop switch and hardware

Mercury Diesel Tier 2: Single engine DTS applications (Inboards, Inboards +Troll and Sterndrive - Uses CCM 48)

MERCURY DIESEL DUAL ENGINE SINGLE HELM PANEL DTS KIT



8M0070429

This helm panel kit is used for the main station for dual engine DTS diesel applications. It includes the helm board with CCM loaded software, hardware, helm harness, start/stop switch and hardware

Mercury Diesel Tier 2: Dual engine DTS applications (Inboards, Inboards +Troll and Sterndrive - Uses CCM 48)

HELM PANEL - MAIN STATION KIT

Image not Available.

8M0070430

This is the main station helm panel. It includes assemblied board with CCM units that are programed for specific engine applications. Also includes hardware, Vessel View and steering components. (SC 2.2) Key switches need to ordered separately.

Used on Zeus Twin Engine Installations DTS - SC 2.2

HELM PANEL BOARD

8M0071493

This helm board includes CCM, harness, and hardware used to install DTS Single engine applications

Cummins Single DTS

MERCURY DIESEL SINGLE ENGINE SINGLE HELM PANEL DTS BOARD



84-8M0071357

This helm board includes CCM, harness and hardware needed to install DTS on single applications.

Mercury Diesel Tier 2: Single engine DTS applications (Inboards and Sterndrives (SC 2.2))

HELM PANEL BOARD

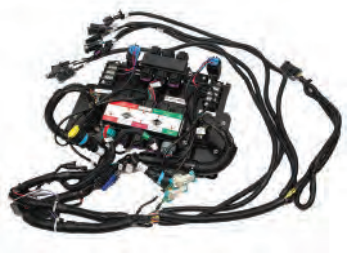

98-8M0070953

This helm board includes CCM, harness, and hardware used to install DTS Twin engine applications

QSB, QSC, QSL,QSM and QSD Inboard, Inboard, Inboard + Troll and Sterndrives (SC 2.2)

HELM PANEL BOARD

8M0071494

This helm board includes CCM, harness, and hardware used to install DTS Twin engine applications

Cummins Dual DTS

MERCURY DIESEL TDI AXIUS GEN II

8M0071130

BASIC Axius Gen II Main Helm Kit

Mercury Diesel TDI 3.0L and 4.2L DTS engines (not 3.0L 150 HP)

MERCURY DIESEL HELM PANEL BOARD - AXIUS GEN II

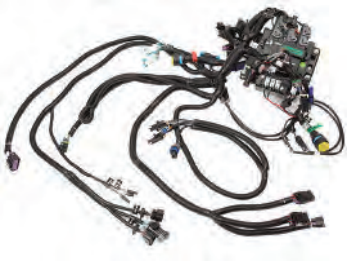

8M3800000

This helm board will include CCM's, Harness and Hardware needed to Gen II Axius on diesle DTS engines (specific application)

Mercury Diesel Axius Gen II (SC 2.5) on Tier 2 4.2L engine

ZEUS HELM BOARD

Image not Available.

8M0104775

Zeus Helm Board for 2.5 applications

Zeus dual engine only

HELM PANEL DTS - SECOND STATION

MERCURY DIESEL SINGLE ENGINE SECOND HELM PANEL DTS KIT



8M0071419

This helm panel kit is used for the second helm station for single diesel engine applications. It includes the helm board with CCM loaded software, hardware, helm harness, start/stop switch and hardware

Mercury Diesel Tier 2: Single DTS engine (Inboards, Inboards +Troll and Sterndrive - Uses CCM 48)

MERCURY DIESEL DUAL ENGINE SECOND HELM PANEL DTS KIT

8M0071420

This helm panel kit is used for the second helm station for dual diesel engine applications. It includes the helm board with CCM loaded software, hardware, harness, start/stop switch and hardware.

Mercury Diesel Tier 2: Dual DTS engine (Inboards, Inboards +Troll and Sterndrive - Uses CCM 48)

HELM PANEL - SECOND STATION KIT

Image not Available.

8M0071378

This is the second station helm panel. It includes assemblied board with CCM units that are programed for specific engine applications. Also includes hardware and Vessel View (SC 2.2) Key switches need to ordered separately.

Used on Zeus Twin Engine Installations DTS - SC 2.2

MERCURY DIESEL TDI AXIUS GEN II - SECOND HELM

8M0071131

BASIC Axius Gen II Second Helm Kit

Mercury Diesel TDI 3.0L and 4.2L DTS engines (not 3.0L 150 HP)

AXIUS GEN II PREMIER UPGRADE KIT



8M2800008

Upgrades a dual station Axius Basic package to a dual station Premier package.
8.2 MAG, 8.2 MAG H.O., 5.0 MPI. 350 MAG, 377 MAG, QSD 2.8, QSD 4.2

HELM PANEL NON-DTS MAIN STATION

Non DTS installations need to order the loose parts. See Helm hardware Section. No panels are sold for these models

HARNESS NON DTS



84-8M0052672

This Non DTS main helm harness is used on diesel product. Order 1 for singles engine and 2 for twin engine installs
No Keys
Non DTS QSB,QSC,QSL,QSM and QSD diesel Installations

CCM SERVICE MODULES

CCM MODULE SC 2.5



77-8M0075773

CCM Module with Software (CCM10)
QSB,QSC,QSL,QSM Inboard, Inboard plus Troll and Sterndrive CCM Module SC 2.5

CCM MODULE SC 2.2 STBD



77-8M0075786

CCM Module with Software (CCM 48)
QSB,QSC,QSM Zeus CCM Module SC 2.2

CCM MODULE SC 2.2 PORT

77-8M0075787

CCM Module with Software (CCM 48)
QSB,QSC,QSM Zeus CCM Module SC 2.2

CCM MODULE SC 2.2

77-8M0075795

CCM Module with Software (CCM 48)
QSB, QSC, QSM, QSD Inboards and Sterndrives - CCM Module SC 2.2

CCM MODULE - ZEUS HYDRA



77-8M0075767

CCM Module with Software (CCM10)
Multiple Engine Zeus Hydra - Triple and Quad

CCM MODULE SC 2.2



77-8M0075809

CCM Module with Software (CCM 48)
QSD,QSB,QSC,QSM AutoPilot Module

CCM MODULE - ZEUS HYDRA

8M0107056

CCM Module with 3.0 Software (Auto Pilot Module)
Multiple Engine Zeus Hydra - Triple and Quad

CCM MODULE AXIUS GEN II



77-8M0075769

CCM Module with Software (CCM10)
QSD Axius Gen II SC 2.5 (CCM 10) Twin Engines

CCM MODULE SC 2.2 PORT



77-8M0075794

CCM Module with Software (CCM 48)
QSD Axius Gen I - CCM Module SC 2.2

CCM MODULE SC 2.2

77-8M0075795

CCM Module with Software (CCM 48)
QSB, QSC, QSM, QSD Inboards and Sterndrives - CCM Module SC 2.2

ADAPTERS AND HARNESSES

SHIFT ACTUATOR HARNESS



84-879312T12

Shift actuation harness.
Sterndrive harness extension

VESSEL SENSOR HARNESS



84-879312T13

Vessel sensor harness with neutral safety.

EXTENSION HARNESS- NEUTRAL SAFETY



84-899887T01

Harness extension used with neutral safety switch. (DTS Shift Actuator)
Sterndrives (DTS)

GEAR ACTUATOR HARNESS



84-879312T10

Gear actuator harness.
On/Off
Forward/Reverse.
Inboard with DIN connector.

GEAR ACTUATOR EXTENSION HARNESS



84-879312T11

Actuator extension harness DTS Troll with DIN Connector
Gear On/Off, Forward/Reverse
Twin Disc gear actuation

GEAR ACTUATOR HARNESS



84-879312T23

DTS Inboard with fuel injector connector (ZF gear actuation)

ACTUATOR WIRING HARNESS



84-879312T09

Gear forward/reverse.

Sterndrive
DTS Troll with fuel injector connector.

HARNESS MERCATHODE 12 V



84-879148T41

Harness for 12 volt MerCathode installation
Zeus QSB/QSC EA 9164 QSM SV 2709

HARNESS MERCATHODE 24 V



84-897345T63

Harness used with MerCathode 24 volt
Zeus QSB/QSC EA 9165 QSM SV2709

HARNESS SKYHOOK



84-879150A33

Harness to connect to Skyhook Warning System
Zeus Optional EA 8314

HARNESS -DRIVE APPLCIATION KIT

Image not Available.

84-8M0071504

This kit includes the trim relay harnness and the gear lube level harness
All Sterndrives (Both DTS and Non DTS) Harness kit is included as part of the Zeus TR Driveshaft option (ref EA 8718)

MUS ID JUMPER



84-8M2004357

MUS ID Jumper - assigns the City ID to be used for a diesel engine
Used to identify the Port Outer diesel engine in a dual, triple or quad application

84-8M0069106

MUS ID Jumper - assigns the City ID to be used for a diesel engine
Used to identify the Port Inner diesel engine in a quad application

84-8M0109294

MUS ID Jumper - assigns the City ID to be used for a diesel engine
Used to identify the Starboard Inner diesel engine in a triple or quad application

84-8M0109337

MUS ID Jumper - assigns the City ID to be used for a diesel engine
Used to identify the Starboard Outer diesel engine in a single, dual, triple or quad application

HARNESS ASSEMBLY



84-899887T02

Mercury Diesel Inboards (both DTS and Mechanical)

DRIVE APPLICATION HARNESS EXTENSION

Image not Available.

84-879172T90

5 foot drive application extension harness

Zeus applications

HARNESS EXTENSION - ENGINE TO VIP



84-879345T61

Harness extension used to extend length from engine to VIP 5 ft

Mercury Diesel - Sterndrives and Inboards (DTS and Mechanical) - does not apply to TDI

84-879345T62

Harness extension used to extend length from engine to VIP 10 ft

Mercury Diesel - Sterndrives and Inboards (DTS and Mechanical) - does not apply to TDI

84-879345T63

Harness extension used to extend length from engine to VIP 15 ft

Mercury Diesel - Sterndrives and Inboards (DTS and Mechanical) - does not apply to TDI

84-879345T64

Harness extension used to extend length from engine to VIP 20 ft

Mercury Diesel - Sterndrives and Inboards (DTS and Mechanical) - does not apply to TDI

POWER HARNESS



84-899887T13

Engine unswitched power harness (10 ft)

All diesels - both Non DTS and DTS

84-899887T14

Engine unswitched power harness (20 ft)

All diesels - both Non DTS and DTS

VESSEL SENSOR HARNESS STERNDRIVE



84-899887T07

Harness used to vessel sensors - Optional

All Sterndrive Diesels Non DTS and DTS Including Axius (not for TDI)

VESSEL SENSOR HARNESS - INBOARDS



84-899887T08

Harness used to vessel sensors - Optional

All Inboards Diesels Non DTS and DTS (not for TDI)

VESSEL SENSOR KIT



84-899887T09

Vessel sensor Connector Kit for building your own harness (optional)

All Diesel products

VESSEL SENSOR EXTENSION HARNESS



84-899888T21

Vessel sensor extension harness (Optional) 5 feet

All Diesel products Non DTS and DTS including Axius

84-899888T22

Vessel sensor extension harness (Optional) 10 feet

All Diesel products Non DTS and DTS including Axius

84-899888T23

Vessel sensor extension harness (Optional) 15 feet

All Diesel products Non DTS and DTS including Axius

84-899888T23

Vessel sensor extension harness (Optional) 15 feet

All Diesel products Non DTS and DTS including Axius

84-899887T17

Vessel sensor extension harness (Optional) 20 feet

All Diesel products Non DTS and DTS including Axius

HARNESS ADAPTER HALON



84-879312T20

This adapter harness (halon) is used on non DTS diesel installations. Order 1 for singles and 2 for twin engine installs.

Mercury Diesel Mechanical engines

HARNESS ADAPTER LANYARD



84-879312T21

This lanyard adapter harness is used in the helm station for Non DTS Diesel engines. Order 1 for singles and 2 for twin engine installs

Non DTS QSB,QSC,QSL,QSM and QSD helm stations

84-879312T22

This lanyard adapter harness is used in the helm station for Non DTS Diesel engines. Order 1 for singles and 2 for twin engine installs

Non DTS QSB,QSC,QSL,QSM and QSD helm stations

HARNESS NON DTS



84-8M0052672

This Non DTS main helm harness is used on diesel product. Order 1 for singles engine and 2 for twin engine installs

No Keys

Non DTS QSB,QSC,QSL,QSM and QSD diesel Installations

HARNESS -ADAPTOR- GENSET CONVERTER



84-879312T08

Converts SCv1 Genset to SCv2 connector

All Diesels

JOYSTICK: MAIN POWER RELAY HARNESS - 20 FT.



84-897345T08

Powers CCMs and TVMs for Joystick installations. Used in addition to 5 amp clean power harness. (20 ft. long)

JOYSTICK: MAIN POWER RELAY HARNESS - 40 FT.



84-879172T85

Powers CCMs and TVMs for Joystick installations. Used in addition to 5 amp clean power harness. (40 ft. long)

JOYSTICK: MAIN POWER RELAY HARNESS - 60 FT.

84-879172T86

Powers CCMs and TVMs for Joystick installations. Used in addition to 5 amp clean power harness. 60 ft. long

FUEL LEVEL HARNESS



84-8M0089989

4 pin fuel level harness used in conjunction with the applicable diesel vessel sensor harness to get up to two tank inputs per diesel engine.

Applies to all diesel applications from calendar year 2014 and later. Number of available tank inputs are specific to each diesel engine application (typically 1 to 2 per engine).

MISCELLANEOUS ACCESSORIES

These electrical accessories are for Diesel Installations

SHIFT ACTUATOR ASY



8M2010067

DTS Shift Actuator
Diesel Sterndrives (DTS) (Ref GA 8001)

CONVERTER - 12 TO 24 VOLT



8M0069711

This product will convert voltage from 12 V to 24 V 25 Amp
DTS Inboards and Sterndrives

VIBRATION ISOLATOR KIT



8M2011935

Vibration isolator kit
For mounting a Mercury ECU (which does need vibration isolation)

MATCHED KEY SWITCH KIT

Image not Available.

87-8M3001384

Matched pair of 4 position key switches and keys along with the switch housings.
Any dual engine application which utilizes the 6 pin key switch connectors at the helm

SMARTCRAFT RIGGING

ACTIVE TRIM KITS



Active Trim is Mercury Marine's patented GPS-based automatic engine trim system. This intuitive, hands-free system continually adjusts engine trim for changes in operating conditions to improve performance, fuel economy, and ease of operation. It responds to boat maneuvers with precision and delivers a better overall driving experience.

ACTIVE TRIM - DTS

Image not Available.

8M0111544

The Active Trim Kit includes Active Trim pad, ECU, harness and if necessary, digital trim sender. Active Trim part numbers are specific to engine families. Ensure correct kit is ordered. Additional parts may be required dependent on boat rigging.

Single - Quad Engine Verado 200-400HP and Single & Dual Engine DTS/JPS MerCruiser Sterndrive

ACTIVE TRIM - MECHANICAL MERCRUISER - SINGLE ENGINE

8M0111550

The Active Trim Kit includes Active Trim pad, ECU, harness and if necessary, digital trim sender. Active Trim part numbers are specific to engine families. Ensure correct kit is ordered. Additional parts may be required dependent on boat rigging.

Single Engine Mechanical Sterndrive 4.5L and 6.2L 300-350HP Only

ACTIVE TRIM - MECHANICAL MERCRUISER - DUAL ENGINE

8M0111554

The Active Trim Kit includes Active Trim pad, ECU, harness and if necessary, digital trim sender. Active Trim part numbers are specific to engine families. Ensure correct kit is ordered. Additional parts may be required dependent on boat rigging.

Dual Engine Mechanical Sterndrive 4.5L and 6.2L 300 & 350HP only

ACTIVE TRIM - 150HP FOURSTROKE, OPTIMAX 150-250HP - SINGLE ENGINE

8M0111545

The Active Trim Kit includes Active Trim pad, ECU, harness and if necessary, digital trim sender. Active Trim part numbers are specific to engine families. Ensure correct kit is ordered. Additional parts may be required dependent on boat rigging.

Single Engine 150HP FourStroke and Optimax 150-250HP

ACTIVE TRIM - 150HP FOURSTROKE, OPTIMAX 150-250HP - DUAL ENGINE

8M0111552

The Active Trim Kit includes Active Trim pad, ECU, harness and if necessary, digital trim sender. Active Trim part numbers are specific to engine families. Ensure correct kit is ordered. Additional parts may be required dependent on boat rigging.

Dual Engine 150HP FourStroke and Optimax 150-250HP

ACTIVE TRIM - 75-115HP FOURSTROKE - SINGLE ENGINE

8M0111546

The Active Trim Kit includes Active Trim pad, ECU, harness and if necessary, digital trim sender. Active Trim part numbers are specific to engine families. Ensure correct kit is ordered. Additional parts may be required dependent on boat rigging.

Single Engine 75-115HP FourStroke

ACTIVE TRIM - 75-115HP FOURSTROKE - DUAL ENGINE

8M0111553

The Active Trim Kit includes Active Trim pad, ECU, harness and if necessary, digital trim sender. Active Trim part numbers are specific to engine families. Ensure correct kit is ordered. Additional parts may be required dependent on boat rigging.

Dual Engine 75-115HP FourStroke

ACTIVE TRIM - 40-60HP FOURSTROKE - SINGLE ENGINE

8M0111547

The Active Trim Kit includes Active Trim pad, ECU, harness and if necessary, digital trim sender. Active Trim part numbers are specific to engine families. Ensure correct kit is ordered. Additional parts may be required dependent on boat rigging.

Single Engine (2016+) 40-60HP FourStroke

ACTIVE TRIM - RACE DTS

8M0113442

The Active Trim Kit includes Active Trim pad, ECU, harness and if necessary, digital trim sender. Active Trim part numbers are specific to engine families. Ensure correct kit is ordered. Additional parts may be required dependent on boat rigging.

Greater than 70 mph Single - Quad Engine Verado 200-400HP and Single - Dual Engine DTS/JPS MerCruiser Sterndrive boats

ACTIVE TRIM - PAD ONLY

8M0112041

Active trim pad for second helm and/or service replacement

DIGITAL TRIM SENDER KIT - 40-60HP FOURSTROKE

8M0109720

Digital Trim Sender Kit

40-60HP FourStroke

DIGITAL TRIM SENDER KIT - 75-115HP FOURSTROKE

8M0109722

Digital Trim Sender Kit

75-115HP FourStroke

DIGITAL TO ANALOG CONVERTER

8M0111837

Enables use of analog trim gauge with digital trim sender

All SmartCraft compatible engine

ACTIVE TRIM SIDE MOUNT ADAPTER KIT

84-8M0114502

Kit contains bullet to Molex connector to make Active Trim compatible with mechanical side mount control

Only required on boats utilizing mechanical side mount control

ACTIVE TRIM ECM BRACKET

8M0113978

Replacement bracket for installing Active Trim ECM. Bracket included in all Active Trim kits

SMARTCRAFT RIGGING

ACTIVE TRIM ECU MODULE

77-8M0111847

Active trim ECU module for service replacement

JUNCTION BOXES/JUNCTION BOX ACCESSORIES

SMARTCRAFT JUNCTION BOX



878492K14

4-Way SmartCraft Junction Box with (2) weather caps.

Provides connection/distribution point for multiple components on CAN Bus system.

878492T14

4-Way SmartCraft Junction Box without weather caps.

Provides connection/distribution point for multiple components on CAN Bus system.

878492B14

4-Way SmartCraft Junction Box without weather caps.

Provides connection/distribution point for multiple components on CAN Bus system.

Priced individually, sold @ multiples of 24

SMARTCRAFT JUNCTION BOX



878492K16

6-Way SmartCraft Junction Box with (3) weather caps.

Provides connection/distribution point for multiple components on CAN Bus system. Order 1 for single and 2 for twin engine installs.

878492T16

6-Way SmartCraft Junction Box without weather caps.

Provides connection/distribution point for multiple components on CAN Bus system.

878492B16

6-Way SmartCraft Junction Box without weather caps.

Provides connection/distribution point for multiple components on CAN Bus system.

Priced individually, sold @ multiples of 24

SMARTCRAFT JUNCTION BOX



878492K18

8-Way SmartCraft Junction Box with (4) weather caps.

Provides connection/distribution point for multiple components on CAN Bus system.

878492T18

8-Way SmartCraft Junction Box without weather caps.

Provides connection/distribution point for multiple components on CAN Bus system.

SMARTCRAFT WEATHER CAP



859318T 2

Weather Cap for SmartCraft Junction Box

Provides weather protection at unused junction box connection points

859318B 2

Weather Cap for SmartCraft Junction Box

Provides weather protection at unused junction box connection points

Priced individually, sold @ multiples of 24

10 PIN WEATHER CAP



888507T

10 pin weather cap with mounting tab.

Used for harnessing that could plug into a Junction Box.

SMARTCRAFT J-BOX TERMINATOR/RESISTOR



859318T 1

SmartCraft Yellow 10-pin Terminator/Resistor

Provides CAN Bus termination for CAN P network.

859318B 1

SmartCraft Junction Box Terminator/Resistor

Provides CAN Bus termination where installed

Priced individually, sold @ multiples of 24

TERMINATOR ASSEMBLY



8M0055652

SmartCraft Terminator Can 1/P & H

RESISTOR- TERMINATION- 2 PIN



893388A01

Blue 2-pin terminator/resistor

Provides CAN bus termination for CAN Networks.

HELM MPR 2 PIN WEATHER CAP



86-8M0054244

GT280 2 pin male weather cap.

Used on Joystick (Zeus, Axius and JPO) applications for the Helm MPR connection harness 8M2021476.

PLUG ASY DIAGNOSTIC PORT



8M0046339

10 pin diagnostic port for use on any SmartCraft application.

Used as a 10 pin diagnostic port for connecting Mercury Computer Diagnostic System (CDS) junction box connection. Typically gets mounted at the helm, out of line of site so that a technician does not have to disassemble helm to plug into a 10 pin connection. Requires a harness from back of diagnostic port to a 10 pin SmartCraft connection in the rigging.

SMARTCRAFT GAUGE HARNESSES

SC1000 SYSTEM TACHOMETER HARNESS



84-879979T11

3 ft. (.9 meters) Tachometer Harness

Provides connection to SC1000 System Tachometer, horn and SC100 Series Gauges. Requires the use of SmartCraft Junction Boxes listed in SC1000 Section.

SC1000 SYSTEM SPEEDOMETER HARNESS



84-879978T11

3 ft. (.9 meters) Speedometer Harness

Provides connection to SC1000 System Speedometer, air temp, GPS (0183) and horn. Requires the use of SmartCraft Junction Boxes listed in SC1000 Section. See SC1000 System Speedometer product in SC1000 Section.

SMARTCRAFT RIGGING

3 FT. SMARTCRAFT GAUGE EXTENSION HARNESS



84-898160T01

Used to extend the mounting of gauges up to three additional feet from J Box. CAN P Only

HARNESS EXTENSION- 10 PIN



84-8M0058668

This harness extension will allow you to increase the length by 6 feet of the 10 pin drop for instruments. The extension will work with Side Mount controls as well as any 896537 series main engine / boat harness.

DIAGNOSTIC HARNESS ADAPTOR



84-859316T 1

Service replacement harness for SmartTach communication. Plugs between diagnostic port and engine harness

DUAL ENGINE INSTRUMENT ADAPTER



84-892323T01

Allows gauges to be powered from any key switch on dual applications
Works with all SmartCraft compatible engines

TRIPLE ENGINE INSTRUMENT ADAPTER

84-892323T08

Allows gauges to be powered from any key switch on triple applications.
Works with all SmartCraft compatible engines

QUAD ENGINE INSTRUMENT ADAPTER



84-898284T01

Allows gauges to be powered from any key switch on triple applications.
Works with all SmartCraft compatible engines.

SC 100 LINK HARNESSES

SYSTEM LINK RESET HARNESS



898289T42

Resets SC 100 gauges in the event of voltage drops due to starting engine with a low/weak battery. Use in conjunction with System Link Harness (84-892821K01)
SmartCraft SC 100 gauges

SC 100 DATA HARNESS



84-880756T05

6 in. SmartCraft Extension Harness
Provides data link extension between SC100 Series products.

SC 100 DATA HARNESS



84-880756T 1

1 ft. (.3 meters) SmartCraft Extension Harness
Provides data link extension between SC100 Series products.

84-880756T 3
3 ft. (.9 meters) SmartCraft Extension Harness
Provides data link extension between SC100 Series products.

84-880756B 3
3 ft. (.9 meters) SmartCraft Extension Harness
Provides data link extension between SC100 Series products.
Priced individually, sold @ multiples of 12

84-880756T10
10 ft. (3.0 meters) SmartCraft Extension Harness
Provides data link extension between SC100 Series products.

84-880756T30
30 ft. (9.1 meters) SmartCraft Extension Harness
Provides data link extension between SC100 Series products.

84-880756B30
30 ft. (9.1 meters) SmartCraft Extension Harness
Provides data link extension between SC100 Series products.
Priced individually, sold @ multiples of 12

10 PIN (YELLOW) DATA HARNESSES

CAN DATA HARNESS - 10 PIN - NO RESISTORS DTS (YELLOW)



84-879312T44
Contains CAN 1,2, and 3. 1 ft. (0.3 meter) SmartCraft data harness without resistors
Provides data link between SmartCraft System CAN Bus components on DTS applications (Digital Throttle & Shift)

84-879312T45
Contains CAN 1,2, and 3. 2 ft. (0.6 meter) SmartCraft data harness without resistors
Provides data link between SmartCraft System CAN Bus components on DTS applications (Digital Throttle & Shift)

879312T46
Contains CAN 1,2, and 3. 3 ft. (0.9 meter) SmartCraft data harness without resistors
Provides data link between SmartCraft System CAN Bus components on DTS applications (Digital Throttle & Shift)

84-879312T47
Contains CAN 1,2, and 3. 4 ft. (1.2 meter) SmartCraft data harness without resistors
Provides data link between SmartCraft System CAN Bus components on DTS applications (Digital Throttle & Shift)

CAN DATA HARNESS - 10 PIN - NO RESISTORS (YELLOW)



84-879969T 6
6 ft. (1.8 meter) SmartCraft data harness without resistors
Provides data link between SmartCraft CAN P, X and H components.

84-879969B 6
6 ft. (1.8 meter) SmartCraft data harness without resistors
Provides data link between SmartCraft CAN P, X and H components.
Priced individually, sold @ multiples of 6

84-879969T10
10 ft. (3.0 meter) SmartCraft data harness without resistors
Provides data link between SmartCraft CAN P, X and H components.

84-879969B10
10 ft. (3.0 meter) SmartCraft data harness without resistors
Provides data link between SmartCraft CAN P, X and H components.
Priced individually, sold @ multiples of 6

84-879969T15
15 ft. (4.6 meter) SmartCraft data harness without resistors
Provides data link between SmartCraft CAN P, X and H components.

84-879969T20
20 ft. (6.1 meter) SmartCraft data harness without resistors
Provides data link between SmartCraft CAN P, X and H components.

84-879969T30
30 ft. (9.1 meter) SmartCraft data harness without resistors
Provides data link between SmartCraft CAN P, X and H components.

CAN DATA HARNESS - 10 PIN WITH ONE RESISTOR (YELLOW)



84-879980T10
10 ft. (3.0 meter) SmartCraft data harness with one resistor
Provides data link between SmartCraft CAN P, X and H components.

84-879980B10
10 ft. (3.0 meter) SmartCraft data harness with one resistor
Provides data link between SmartCraft CAN P, X and H components.
Priced individually, sold @ multiples of 12

84-879980T15
15 ft. (4.6 meter) SmartCraft data harness with one resistor
Provides data link between SmartCraft CAN P, X and H components.

84-879980B15
15 ft. (4.6 meter) SmartCraft data harness with one resistor
Provides data link between SmartCraft CAN P, X and H components.
Priced individually, sold @ multiples of 6

84-879980T20
20 ft. (6.1 meter) SmartCraft data harness with one resistor
Provides data link between SmartCraft CAN P, X and H components.

84-879980T30

30 ft. (9.1 meter) SmartCraft data harness with one resistor

Provides data link between SmartCraft CAN P, X and H components.

84-879980B30

30 ft. (9.1 meter) SmartCraft data harness with one resistor

Provides data link between SmartCraft CAN P, X and H components.

Priced individually, sold @ multiples of 12

10 PIN (BLUE) DATA HARNESSES

CAN DATA HARNESS - 10 PIN NON DTS WITH RESISTORS (BLUE)



84-879982T20

20 ft. (6.1 meter) SmartCraft data harness with (2) termination resistors

Includes connections for horn and link gauge. Provides data link between SmartCraft CAN P Components.

84-879982B20

20 ft. (6.1 meter) SmartCraft data harness with (2) termination resistors

Includes connections for horn and link gauge. Provides data link between SmartCraft CAN P Components.

Priced individually, sold @ multiples of 12

84-879982T25

25 ft. (7.6 meter) SmartCraft data harness with (2) termination resistors

Includes connections for horn and link gauge. Provides data link between SmartCraft CAN P Components.

84-879982T30

30 ft. (9.1 meter) SmartCraft data harness with (2) termination resistors

Includes connections for horn and link gauge. Provides data link between SmartCraft CAN P Components.

84-879982B30

30 ft. (9.1 meter) SmartCraft data harness with (2) termination resistors

Includes connections for horn and link gauge. Provides data link between SmartCraft CAN P Components.

Priced individually, sold @ multiples of 12

CAN DATA HARNESS - 10 PIN - NO RESISTORS NON DTS (BLUE)



84-879968T 6

6 ft. (1.8 meter) SmartCraft data harness without resistors and no additional connections

Provides data link between SmartCraft CAN P Components.

84-879968B 6

6 ft. (1.8 meter) SmartCraft data harness without resistors and no additional connections

Provides data link between SmartCraft CAN P Components.

Priced individually, sold @ multiples of 12

84-879968T10

10 ft. (3.0 meter) SmartCraft data harness without resistors and no additional connections

Includes connections for horn and link gauge. Provides data link between SmartCraft CAN P Components.

84-879968B10

10 ft. (3.0 meter) SmartCraft data harness without resistors and no additional connections

Provides data link between SmartCraft System CAN Bus Components

Priced individually, sold @ multiples of 12

84-879968T15

15 ft. (4.6 meter) SmartCraft data harness without resistors and no additional connections

Provides data link between SmartCraft System CAN Bus Components

84-879968T20

20 ft. (6.1 meter) SmartCraft data harness without resistors and no additional connections

Provides data link between SmartCraft System CAN Bus Components

84-879968T25

25 ft. (7.6 meter) SmartCraft data harness without resistors and no additional connections

Provides data link between SmartCraft System CAN Bus Components

84-879968T30

30 ft. (9.1 meter) SmartCraft data harness without resistors and no additional connections

Provides data link between SmartCraft System CAN Bus Components

84-879968B30

30 ft. (9.1 meter) SmartCraft data harness without resistors and no additional connections

Provides data link between SmartCraft System CAN Bus Components

Priced individually, sold @ multiples of 12

84-879968T50

50 ft (15.2 meter) SmartCraft data harness without resistors and no additional connections

Provides data link between SmartCraft System CAN Bus Components

84-879968T80

80 ft (24.4 meter) SmartCraft data harness without resistors and no additional connections

Provides data link between SmartCraft System CAN Bus Components

CAN DATA HARNESS - 10 PIN - ONE RESISTOR NON DTS (BLUE)



84-879981T10

10 ft. (3.0 meter) SmartCraft data harness with one resistor

Provides data link between SmartCraft System CAN Bus Components

84-879981T15

15 ft. (4.6 meter) SmartCraft data harness with one resistor

Provides data link between SmartCraft System CAN Bus Components

84-879981T20

20 ft. (6.1 meter) SmartCraft data harness with one resistor

Provides data link between SmartCraft System CAN Bus Components

84-879981B20

20 ft. (6.1 meter) SmartCraft data harness with one resistor

Provides data link between SmartCraft System CAN Bus Components

Priced individually, sold @ multiples of 12

84-879981T25

25 ft. (7.6 meter) SmartCraft data harness with one resistor

Provides data link between SmartCraft System CAN Bus Components

84-879981T30

30 ft. (9.1 meter) SmartCraft data harness with one resistor
Provides data link between SmartCraft System CAN Bus Components

84-879981T50

50 ft. (15.2 meter) SmartCraft data harness with one resistor
Provides data link between SmartCraft System CAN Bus Components

84-879981T80

80 ft. (24.4 meter) SmartCraft data harness with one resistor
Provides data link between SmartCraft System CAN Bus Components

ADAPTER HARNESSES - 10 PIN

ADAPTER-10 PIN



84-892452T01

Used to adapt a 10-pin female connector to another 10-pin female connector

ADAPTER-10 PIN



84-892453A01

Used to adapt a 10-pin male connector to another 10-pin male connector.

"Y" ADAPTER HARNESS - LINK ADAPTER



84-8M0082859

Used on DTS engines that require extend length CAN networks.
Used for long data run multi-engine applications, primarily those utilizing CAN H.

TRIPLE/QUAD DTS LINK HARNESS



84-8M0077124

Allows multiple DTS engine connections to link systems to communicate with each command module. 15 ft
2005 - Present DTS engines CAN P and CAN H Data

84-8M0077125

Allows multiple DTS engine connections to link systems to communicate with each command module. 20 ft
2005 - Present DTS engines CAN P and CAN H Data

TRIPLE/QUAD DTS LINK HARNESS



84-896206T10

Allows multiple DTS engine connections to link systems to communicate with each command module. 10 ft.
Used on DTS engines.

84-896206T15

Allows multiple DTS engine connections to link systems to communicate with each command module. 15 ft.
Used on DTS engines.

CAN P LINK HARNESS ASSEMBLY



84-891957K01

Link cable in connected between junction boxes to allow communication between port and starboard systems in dual applications.

ADAPTER HARNESSES - 2 PIN

2 PIN LINK HARNESS- CAN



84-893452A01

Used to link CAN Networks together.

2 PIN "Y" ADAPTER HARNESS - LINK ADAPTER



84-896370T01

Used on DTS engines that require extended length CAN networks.

ADD-ON SENSOR HARNESSES

BOAT HARNESS - FUEL/PADDLE



84-8M0075945

6-Pin male harness connects tanks and paddle wheel to SmartCraft system

For all Verado and 2006 and newer SmartCraft compatible outboard engines 75 HP and above. Also fits MCM/MIE engines (s/n 0W650000 and above).

84-859743T04

6-Pin Female harness connects tanks and paddle wheel to SmartCraft system.

Fits 2002 - 2005 V6 EFI and Optimax engines. Also fits MCM/MIE engines (s/n 0W649999 and below).

BOAT HARNESS ADAPTER- 6 PIN F- 6 PIN F 6"



84-898285T01

Needed in order to adapt newer engines that are equipped with a female 6-pin connector to a 6-pin female boat harness

BOAT HARNESS ADAPTER- 6 PIN F- 6 PIN F 6'



84-883459T01

Needed in order to adapt newer engines that are equipped with a female 6-pin connector to connect to a 6-pin female boat harness.

EXTENSION- PADDLE WHEEL HARNESS



84-864988

Paddle Wheel extension harness

SMARTCRAFT TANK HARNESS



84-898289T75

120 inch Harness needed to connect tank senders to the 350 Verado SCI

84-898289T76

240 inch Harness needed to connect fuel tank senders to the 350 Verado SCI

VESSEL ADAPTER HARNESS



84-898289T74

Harness is used to connect the traditional 6pin SmartCraft boat harness to the Verado 350 SCI to communicate with tank sensors

OIL PRESSURE SENSOR

OIL PRESSURE SENSOR KIT



866814A01

Required when SmartCraft is installed on 3.0L MPI & Vazer engines. Replaces the original analog oil pressure sensor with a digital sensor.

Fits MCM 3.0L MPI & Vazer engines

BLOCK WATER PRESSURE SENDER

BLOCK WATER PRESSURE DIGITAL KIT



8M0089111

Digital sensor to provide block water pressure on SmartCraft gauges.

2.1L F75-115 Four Stroke

FUEL SENDERS

FUEL GAUGE SENDING UNIT



851052Q

Designed for tanks that have a 5 screw flange. Use with 12 volt system. 33-240 ohm. Adjusts from 4 in.(10.2 cm) to 24 in.(60.7 cm)

Quicksilver Branded, Clamshell Package Point of Sale Packaged.

TRIM SENSORS

POWER TRIM SENDER



891777A01

Starboard Mounted. Required for digital gauge applications.

Fits SmartCraft compatible engines.

SENSOR ASSEMBLY- TRIM



8M0095310

Fits all SmartCraft compatible MerCruiser and Mercury Racing product when these models have the 555 ECM.

SENSOR KIT- TRIM



863187A 2

Fits all SmartCraft compatible MerCruiser and Mercury Racing product when these models have the 555 ECM. Also used on CMD engines

SMARTCRAFT RIGGING

ROTOR KIT



805134A 6

Optional rotor required when using SmartCraft instumentation with the analog trim senders on 2001-2002 MPI engines.
Note: In May of 2002, the ECM 555 controller was modified to allow use of the standard rotor 805134A4 for use with SmartCraft instrumentation which has eliminated the need to swap out the standard H1 rotor with this optional J1 rotor.

For use on 2001-2002 MCM 4.3L, 5.0L, 350 Mag & 6.2L MPI engines with SmartCraft instrumentation. (s/n 0M300000-0M362927)

TRANSOM MOUNT TRANSDUCERS

DEPTH/SPEED/TEMP TRANSDUCER - TRANSOM MOUNT



79-8M0075628

Mounts to boat's transom and provides depth/speed/temp input to SmartCraft instruments.

Fits SmartCraft compatible engines

Mercury Branded

ADAPTER - HARNESS/SENSOR



84-881244A 1

2 to 4 pin adapter with power leads to connect depth transducers to 2002-2005 V6 EFI and OptiMax. This harness is included in the depth transducer kits(879295A01, 881933A11, 884207A11).

SPEED/TEMPERATURE SENSOR



859223A01

Single unit which measures boat speed via paddle wheel as well as water temperature.

Fits SmartCraft compatible engines.

859223B21

Fits SmartCraft compatible engines. BULK KIT

Priced individually, sold @ multiples of 24

TRANSOM MOUNT TRANSDUCER BRACKETS

BRACKET-TRANSDUCER



859223001

Bracket only, used with the 859223 Speed/Temp sender.

TRANSDUCERS THRU HULL

TRANSDUCER INSERT HOUSING - THRU HULL



879296T01

This part is a housing that mounts thru boat's hull allows the insert of a speed/temp transducer (879296T02) or a speed/depth/temp transducer (879296T03). Must be used with either an 879296T02 or 879296T03.

SPEED TEMP TRANSDUCER INSERT - THRU HULL



879296T02

Mounts thru boat's hull, provides speed/temp data input to SmartCraft instruments.

*Must be used with transducer housing part# 879296T01. *This is not a stand alone part.

DEPTH/SPEED/TEMP TRANSDUCER INSERT - THRU HULL



79-8M6001946

Mounts thru boat's hull, provides speed/depth/temp data input to SmartCraft instruments.

*Must be used with transducer housing part# 879296T01. *This is not a stand alone part.

DEPTH/TEMP SENSOR/ THRU HULL/ 10 FT



79-8M0075629

10 foot thru hull depth. Fits 2002 and newer SmartCraft engines

79-8M0075631

10 foot thru hull depth. Fits 2002 and newer SmartCraft engines. BULK KIT - Priced individually, sold @ multiples of 12

DEPTH/TEMP SENSOR/ THRU HULL/ 19 FT

79-8M0075630

Fits 2001 and newer OptiMax, 2002 and newer V-6 EFI & 30-60 EFI FourStroke and MerCruiser engines having the 555 ECM.

79-8M0075632

Fits 2001 and newer OptiMax, 2002 and newer V-6 EFI & 30-60 EFI FourStroke and MerCruiser engines having the 555 ECM.

Priced individually, sold @ multiples of 12

SPEED SENSOR & TEMP /THRU HULL



883090A01

19 ft.

Fits 2002 and newer SmartCraft engines

SPEED SENSOR & TEMP/ THRU HULL

883090B 1

19 ft.

Fits 2001 and newer OptiMax, 2002 and newer V-6 EFI & 30-60 EFI FourStroke and MerCruiser engines having the 555 ECM.

Priced individually, sold @ multiples of 12

TRANSDUCERS IN-HULL

DEPTH FINDER TRANSDUCER - IN HULL



79-8M0075627

Mounts in boat's hull and provides depth input to SmartCraft instruments. Plastic body.

Fits 2002 and newer OptiMax, V-6 EFI & 30-60 EFI FourStroke and MerCruiser engines having the 555 ECM.

PITOT KITS

PITOT/SPEED SENSOR KIT



881879A 2

100 PSI for speeds less than 80 mph. Mounts to either the MerCruiser sterndrive transom bracket or to the boat near the engine. All parts required for mounting and connecting the sensor are included in the kit.

Fits all SmartCraft compatible MerCruiser and Mercury Racing product.

SMARTCRAFT RIGGING

PITOT/SPEED SENSOR KIT



881879A 3

200 PSI for speeds greater than 80 mph. Mounts to either the MerCruiser sterndrive transom bracket or to the boat near the engine. All parts required for mounting and connecting the sensor are included in the kit.

Fits all SmartCraft compatible MerCruiser and Mercury Racing product.

PITOT/SPEED SENSOR KIT



881879A22

This kit provides a hose hook up from the gearcase to a sensor to be engine mounted, allowing SmartCraft (digital) applications for a speedometer to receive a signal from the engine.

Fits the 75/90/115hp. (1.5L) OptiMax outboard engines, Model Year 2004 and newer.

PITOT/SPEED SENSOR KIT



881879A13

100 PSI for speeds less than 80 mph. Mounts to either the MerCruiser sterndrive transom bracket or to the boat near the engine. All parts required for mounting and connecting the sensor are included in the kit. Includes 84-863931 harness (flat 4 pin to transom 10 pin) and 84-863737 harness (round 3 pin to flat 4 pin). Used on current 10 pin harness applications only.

Fits all SmartCraft compatible MerCruiser and Mercury Racing product.

PITOT/SPEED SENSOR KIT



881879A15

100 PSI for speeds less than 80 mph. Mounts to either the MerCruiser sterndrive transom bracket or to the boat near the engine. All parts required for mounting and connecting the sensor are included in the kit. Only includes the 84-863737 harness (round 3 pin to flat 4 pin)

Fits all SmartCraft compatible MerCruiser and Mercury Racing product.

SMARTCRAFT PITOT SENSOR KIT



8M0090447

Pitot sensor kit provides speed information for SmartCraft gauges.

2.1L F75-115 Four Stroke

SMARTCRAFT PITOT SENSOR (SPEED)



8M0103315

100 psi SmartCraft Pitot sensor for speed input

Verado Gen 5 350 HP engine only, all other Gen 5 Verado engines come with Pitot speed sensor

PRESSURE TRANSDUCER KIT



859210A 1

Speed pressure transducer is either mounted to the transom bracket or a location near the engine. 100 PSI sensor is plumbed to a speed pickup tube and then wired to the engine sensor plug included with SmartCraft Gauges.

Fits 2002 and newer OptiMax outboard engines at speeds less than 80 mph.

GPS KITS

SMARTCRAFT GPS ANTENNA 400



8M0091565

SmartCraft GPS Antenna (4.0.12SC) Used with SmartTow Pro SC1000 gauges, MercMonitors, and VesselViews 4 and 7.

Sends CAN H and CAN P GPS data for use with GPS SmartTow and Joystick Piloting boats with Auto Pilot. Software 4.0.12SC

GPS EXTENSION CABLE



84-879171T21

3.2 foot extension cable to be used with GPS Kit (8M0024918)

CAN P GPS signal for non Auto Pilot equipped boats

84-879171T22

6.6 foot extension cable to be used with GPS Kit (8M0024918)

CAN P GPS signal for non Auto Pilot equipped boats

84-879171T23

9.8 foot extension cable to be used with GPS Kit (8M0024918)

CAN P GPS signal for non Auto Pilot equipped boats

MALE - FEMALE 5-PIN EXTENSION HARNESS



84-879171T01

0.5 meter long harness to extend any NMEA 2000 backbone or Mercury CAN H bus for IMU/GPS signal.

84-879171T02

1 meter long harness to extend any NMEA 2000 backbone or Mercury CAN H bus for IMU/GPS signal.

84-879171T03

2 meter long harness to extend any NMEA 2000 backbone or Mercury CAN H bus for IMU/GPS signal.

84-879171T04

3 meter long harness to extend any NMEA 2000 backbone or Mercury CAN H bus for IMU/GPS signal.

84-879171T05

4 meter long harness to extend any NMEA 2000 backbone or Mercury CAN H bus for IMU/GPS signal.

84-879171T06

5 meter long harness to extend any NMEA 2000 backbone or Mercury CAN H bus for IMU/GPS signal.

84-879171T07

6 meter long harness to extend any NMEA 2000 backbone or Mercury CAN H bus for IMU/GPS signal.

84-879171T08

7 meter long harness to extend any NMEA 2000 backbone or Mercury CAN H bus for IMU/GPS signal.

84-879171T09

8 meter long harness to extend any NMEA 2000 backbone or Mercury CAN H bus for IMU/GPS signal.

84-879171T10

9 meter long harness to extend any NMEA 2000 backbone or Mercury CAN H bus for IMU/GPS signal.

84-879171T11

10 meter long harness to extend any NMEA 2000 backbone or Mercury CAN H bus for IMU/GPS signal.

NMEA 2000 POWER HARNESS

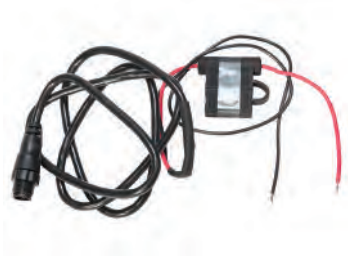

84-8M0083249

NMEA 2000 power harness. Overmolded NMEA 2000 connector with fused harness.

Used to provide power to the NMEA 2000 bus.

NMEA 2000 "T" CONNECTOR



8M6002266

NMEA 2000 "T" Connector

VesselView 4 & 7, Mercury Gateway, MercMonitor and all NMEA 2000 capable chartplotter and product installations.

NMEA 2000 RESISTOR CAP - FEMALE



879346T60

NMEA 2000 Resistor Cap - Female Pins

VesselView 4 & 7, Mercury Gateway, MercMonitor and all NMEA 2000 capable chartplotter and product installations.

NMEA 2000 RESISTOR CAP - MALE



8M6002270

NMEA 2000 Resistor Cap - Male Pins

VesselView 4 & 7, Mercury Gateway, MercMonitor and all NMEA 2000 capable chartplotter and product installations.

NMEA 2000 WEATHER CAP



86-8M6000708

NMEA 2000 weather cap (male thread in).

Used to cap an open connection on NMEA 2000 network.

SMARTCRAFT RIGGING KITS

SMARTCRAFT RIGGING KIT



8M0056278

Kit contains the following:

1257- 8742A21 Oil Tanks with Oil Senders (2)
859223 Speed/Temperature Sensor (1)
84-859743T 1 Haness to oil, fuel and paddle wheel (2)
84-879981T30 SC1000R-30, 30 ft. (9.1 meter) Data Harnesses (2)
878492A16, 6-Plug J Box (1)
859318T 2 Weather Caps (2)
881175A 1 Male Connector Cap (1)
881176A 1 Female Connector Cap (1)

For dual application. Fits 2001-2005 OptiMax Outboards, 2002-2005 V-6 EFI Outboards and Pro Max Mercury Racing Outboards (when equipped with the 555 Electronic Control Module). The oil tank bracket may only be used as a floor mounted application.

SMARTCRAFT ENGINE DATA KIT



8M0056279

Kit contains the following:
1257- 8742A22 Oil Tank without Oil Sender (1)
79-879896K21 Front Mount SC1000 System Monitor
Data Harness removed for 2006 (84-879982A30) - use new 14 pin harness with 84-896537 series which eliminates the data harness - 10 pin is part of primary engine to helm harness
The oil tank bracket may only be used as a floor mounted application.

Fits 2006 and newer OptiMax Outboards when using new 14 pin harness

ANALOG TO DIGITAL CONVERSION KIT



859648A 2

Converts an analog to a digital OptiMax. Contains the sensors, harnesses and instructions needed.

Fits 2000 and newer OptiMax 2.5L engines.

ANALOG TO DIGITAL CONVERSION KIT



859649A 2

Converts an analog to a digital OptiMax. Contains the sensors, harnesses and instructions needed.

Fits 2000 OptiMax 3.0L engines.

OPTIMAX MY2001 ANALOG RIGGING KIT



8M0078157

Contains necessary components allowing a digital OptiMax to operate analog speedometer, tachometer and water pressure gauges.

Fits OptiMax engines, model year 2001 and newer.

REMOTE 3.0 US GAL (11 L) OIL TANK



1257- 8742A21

Remote 3.0 US gal (11 L) Oil Tank with sender, complete with tank, lines, floor mounting bracket and all hardware.

REMOTE 3.0 US GAL (11 L) OIL TANK



1257- 8742A22

Remote 3.0 US gal (11 L) Oil Tank without sender, complete with tank, lines, floor mounting bracket and all hardware.

Optional tank size for Mercury/Mariner 2 cycle outboards, to be used wherever a pressurized oil reservoir system is already in use. This tank and bracket assembly is only used in floor mounted applications.

REMOTE 3.0 US GAL (11 L) OIL TANK



1257- 8742A23

Remote 3.0 US gal (11 L) Oil Tank without sender, complete with tank, lines, mounting bracket and all hardware. Old Bracket Design

Optional tank size for Mercury/Mariner 2 cycle outboards, to be used wherever a pressurized oil reservoir system is already in use. This tank and bracket assembly may be optionally floor or wall mounted.

RIGGING KIT - 1.5L OPTI



891954A24

White - This kit will allow you to experience all the SmartCraft features as if the engine was SmartCraft ready from the factory. Experience the SmartCraft difference. 3-3/8 in. (85 MM) diameter hole. Removed data harness. New 14 pin harness has drop down lead with 10 pin eliminating need for separate data harness.

1.5L Opti models. Add this kit to 2 stroke engines that do not come with sensors as standard equipment. Includes trim sensor, fuel line and SC1000 Round System Monitor. 2006 M/Y (Use with 14 Pin harness 84-896537 series)

MECHANICAL SMARTTOW HELM KIT



8M0101650

SmartTow and Cruise are now available on MerCruiser gas engine platforms that utilize mechanical throttle and shift controls! What was previously only available on DTS applications can now be used on the latest gas engine platforms from MerCruiser

This helm kit requires an engine to helm harness and can be utilized on the applicable marine-specific MerCruiser gas engine platforms developed by Mercury. Also requires a gauge that is Cruise/SmartTow capable. Can be used with Zero Off capable gauges when Zero Off Security token is added. Sinlge engine applications only

SMARTCRAFT RIGGING

SMARTTOW: ENGINE TO HELM HARNESS



84-8M0101640

Connects the marine-specific MerCruiser gas engine to the helm kit for Cruise/ SmartTow functionality on mechanical engines. Harness is 10 feet

Single engine only marine-specific MerCruiser gas engine applications

84-8M0101641

Connects the marine-specific MerCruiser gas engine to the helm kit for Cruise/ SmartTow functionality on mechanical engines. Harness is 15 feet

Single engine only marine-specific MerCruiser gas engine applications

84-8M0101642

Connects the marine-specific MerCruiser gas engine to the helm kit for Cruise/ SmartTow functionality on mechanical engines. Harness is 20 feet

Single engine only marine-specific MerCruiser gas engine applications

84-8M0101643

Connects the marine-specific MerCruiser gas engine to the helm kit for Cruise/ SmartTow functionality on mechanical engines. Harness is 25 feet

Single engine only marine-specific MerCruiser gas engine applications

84-8M0101644

Connects the marine-specific MerCruiser gas engine to the helm kit for Cruise/ SmartTow functionality on mechanical engines. Harness is 30 feet

Single engine only marine-specific MerCruiser gas engine applications

SMARTCRAFT AUTHENTICATION DEVICE



8M0105518

Now you can operate applicable MerCruiser engines (mechanical and DTS) with applicable gauges (Medallion, FW Murphy, etc) by using this authentication interface device to enable advanced SmartCraft features.

Mechanical marine-specific MerCruiser gas engines and all DTS engines in conjunction with an applicable third-party SmartCraft gauge that is specifically compatible with this authentication interface device.

ADD-ON SENSOR RIGGING KITS - MCM

RIGGING KIT - MCM W/O STEERING SENSOR



891954A05

This kit will allow you to experience all the Smartcraft features.

MCM 4.3L, 5.0L, 350 Mag, and MX6.2 MPI
Includes Pitot kit, Depth/Temp sensor and boat harness.

RIGGING KIT - MCM W/ STEERING SENSOR



891954A06

This kit will allow you to experience all the Smartcraft features.

MCM 4.3L, 5.0L, 350 Mag, and MX6.2 MPI
Includes Pitot kit, Depth/Temp Sensor, Steering Sensor and boat harness.

SPEEDO-PITOT HARNESS



84-863737T

Required for newer engines that do not have the speedo-pitot harness included with engine harness.

Fits non-DTS smallblock and V-6 MerCruiser engines prior to serial 0W600000.

STEERING/SPEEDO-PITOT HARNESS



84-863736T

Required for engines that do not have the steering/speedo-pitot harness included with engine harness.

Fits all SmartCraft compatible MerCruiser and Mercury Racing products.

TRIM TAB INTERFACE KIT



8M8024589

Shows digital K-Plane trim on SmartCraft instrumentation.
For use with digital K-Plane kits and SmartCraft instrumentation.

ADD-ON SENSOR HARNESSES - MCM

PADDLE WHEEL HARNESS



84-864553T

Harness connects paddle wheel to SmartCraft system.
Fits non-DTS smallblock and V-6 MerCruiser engines prior to serial 0W600000.

TRANSOM HARNESS



84-863931A 1

Used to connect Steering/Speedo Sensor Kit 863188A 3 to MCM 4.3L, 5.0L, 5.7L (350Mag) and 6.2L MPI sterndrive engines.
Fits non-DTS smallblock and V-6 MerCruiser engines prior to serial 0W600000.

3-PIN TANK HARNESS



84-864218

Fits older MCM/MIE mechanical engines that are equipped with a 3-pin tank harness connector.

STEERING ANGLE SENSORS

STEERING/SPEEDO SENSOR KIT



863188A 3

Provides steering angle and degrees, and speed to SmartCraft instruments so gauge can display steering position and speed - useful when docking. Includes steering/speedo-pitot harness P/N 84-863736, required for newer engines that do not have the steering/speedo-pitot harness included with engine harness.
Fits all SmartCraft compatible MerCruiser and Mercury Racing products.

STEERING SENSOR KIT



863188T 4

Provides steering angle and degrees to SmartCraft instruments so gauge can display steering position - useful when docking.
Fits all SmartCraft compatible MerCruiser and Mercury Racing products.

STEERING SENSOR KIT



863188A 5

Provides steering angle and degrees to SmartCraft instruments so gauge can display steering position - useful when docking. Includes steering harness 84-864219 & 84-863931
Fits all SmartCraft compatible MerCruiser and Mercury Racing product . Also used on CMD engines

SMARTCRAFT K-PLANES - HARNESSES

K-PLANE Y HARNESS



84-895820T02

K-Plane Tab Y harness for dual tabs.

Harness from bullet tab sensor to 4 pin tab interface.

HARNESS ASSEMBLY



84-898059T15

Tab extension, 15 feet.

Used to extend the harness included with Digital Trim Tabs to plug directly into the harness included with SystemView Race Edition. REQUIRED for all installations with Digital Tabs and SystemView Race Edition EXCEPT Mercury Racing Sterndrives with New Style 14-Pin Engine Harness connector.

84-898059T20

Tab extension, 20 feet.

Used to extend the harness included with Digital Trim Tabs to plug directly into the harness included with SystemView Race Edition. REQUIRED for all installations with Digital Tabs and SystemView Race Edition EXCEPT Mercury Racing Sterndrives with New Style 14-Pin Engine Harness connector.

84-898059T25

Tab extension, 25 feet.

Used to extend the harness included with Digital Trim Tabs to plug directly into the harness included with SystemView Race Edition. REQUIRED for all installations with Digital Tabs and SystemView Race Edition EXCEPT Mercury Racing Sterndrives with New Style 14-Pin Engine Harness connector.

84-898059T30

Tab extension, 30 feet.

Used to extend the harness included with Digital Trim Tabs to plug directly into the harness included with SystemView Race Edition. REQUIRED for all installations with Digital Tabs and SystemView Race Edition EXCEPT Mercury Racing Sterndrives with New Style 14-Pin Engine Harness connector.

ELECTRICAL

SMARTCRAFT GAUGE HARNESSES

SC1000 SYSTEM TACHOMETER HARNESS



84-879979T11

3 ft. (.9 meters) Tachometer Harness

Provides connection to SC1000 System Tachometer, horn and SC100 Series Gauges. Requires the use of SmartCraft Junction Boxes listed in SC1000 Section.

SC1000 SYSTEM SPEEDOMETER HARNESS



84-879978T11

3 ft. (.9 meters) Speedometer Harness

Provides connection to SC1000 System Speedometer, air temp, GPS (0183) and horn. Requires the use of SmartCraft Junction Boxes listed in SC1000 Section. See SC1000 System Speedometer product in SC1000 Section.

3 FT. SMARTCRAFT GAUGE EXTENSION HARNESS



84-898160T01

Used to extend the mounting of gauges up to three additional feet from J Box. CAN P Only

HARNESS EXTENSION- 10 PIN



84-8M0058668

This harness extension will allow you to increase the length by 6 feet of the 10 pin drop for instruments. The extension will work with Side Mount controls as well as any 896537 series main engine / boat harness.

DIAGNOSTIC HARNESS ADAPTOR



84-859316T 1

Service replacement harness for SmartTach communication. Plugs between diagnostic port and engine harness

DUAL ENGINE INSTRUMENT ADAPTER



84-892323T01

Allows gauges to be powered from any key switch on dual applications

Works with all SmartCraft compatible engines

TRIPLE ENGINE INSTRUMENT ADAPTER

84-892323T08

Allows gauges to be powered from any key switch on triple applications.

Works with all SmartCraft compatible engines

QUAD ENGINE INSTRUMENT ADAPTER



84-898284T01

Allows gauges to be powered from any key switch on triple applications.
Works with all SmartCraft compatible engines.

SC 100 LINK HARNESSES

SYSTEM LINK RESET HARNESS



898289T42

Resets SC 100 gauges in the event of voltage drops due to starting engine with a low/weak battery. Use in conjunction with System Link Harness (84-892821K01)
SmartCraft SC 100 gauges

SC 100 DATA HARNESS



84-880756T05

6 in. SmartCraft Extension Harness
Provides data link extension between SC100 Series products.

SC 100 DATA HARNESS



84-880756T 1

1 ft. (.3 meters) SmartCraft Extension Harness
Provides data link extension between SC100 Series products.

84-880756T 3

3 ft. (.9 meters) SmartCraft Extension Harness
Provides data link extension between SC100 Series products.

84-880756B 3

3 ft. (.9 meters) SmartCraft Extension Harness
Provides data link extension between SC100 Series products.
Priced individually, sold @ multiples of 12

84-880756T10

10 ft. (3.0 meters) SmartCraft Extension Harness
Provides data link extension between SC100 Series products.

84-880756T30

30 ft. (9.1 meters) SmartCraft Extension Harness
Provides data link extension between SC100 Series products.

84-880756B30

30 ft. (9.1 meters) SmartCraft Extension Harness
Provides data link extension between SC100 Series products.
Priced individually, sold @ multiples of 12

INSTRUMENT HARNESSES

Harnesses have ring terminal leads bundled for each gauge.

IGNITION HARNESS - NON DTS 14 PIN

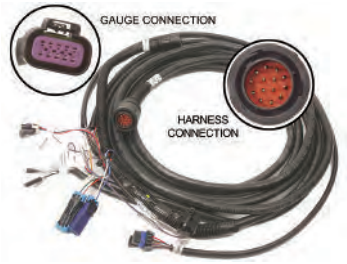

84-896537T02

2 ft. harness (896537A02) with new 14 pin connector for the engine and additional connectors that allow easy quick connect solutions to the rigging process. Loose harness.
Analog gauges also require the use of harness 84-892990T01, T10 or T15.
2006 and newer Non DTS Outboards from 25 Hp to 250 HP- 14 Pin Connectors
All MCM / MIE engines equiped with 14 pin connectors

84-896537T08

8 ft. harness (896537A08) with new 14 pin connector for the engine and additional connectors that allow easy quick connect solutions to the rigging process. Loose harness.
Analog gauges also require the use of harness 84-892990T01, T10 or T15.
2006 and newer Non DTS Outboards from 25 Hp to 250 HP- 14 Pin Connectors
All MCM / MIE engines equiped with 14 pin connectors

84-896537T11

11 ft. harness (896537A11) with new 14 pin connector for the engine and additional connectors that allow easy quick connect solutions to the rigging process. Loose harness.
Analog gauges also require the use of harness 84-892990T01, T10 or T15.
2006 and newer Non DTS Outboards from 25 Hp to 250 HP- 14 Pin Connectors
All MCM / MIE engines equiped with 14 pin connectors

84-896537T15

15 ft. harness (896537A15) with new 14 pin connector for the engine and additional connectors that allow easy quick connect solutions to the rigging process. Loose harness.
Analog gauges also require the use of harness 84-892990T01, T10 or T15.
2006 and newer Non DTS Outboards from 25 Hp to 250 HP- 14 Pin Connectors
All MCM / MIE engines equiped with 14 pin connectors

84-896537T20

20 ft. harness (896537A20) with new 14 pin connector for the engine and additional connectors that allow easy quick connect solutions to the rigging process. Loose harness.
Analog gauges also require the use of harness 84-892990T01, T10 or T15.
2006 and newer Non DTS Outboards from 25 Hp to 250 HP- 14 Pin Connectors
All MCM / MIE engines equiped with 14 pin connectors

84-896537T24

25 ft. harness (896537A24) with new 14 pin connector for the engine and additional connectors that allow easy quick connect solutions to the rigging process. Loose harness.
Analog gauges also require the use of harness 84-892990T01, T10 or T15.

2006 and newer Non DTS Outboards from 25 Hp to 250 HP- 14 Pin Connectors
All MCM / MIE engines equiped with 14 pin connectors

84-896537T29

30 ft. harness (896537A29) with new 14 pin connector for the engine and additional connectors that allow easy quick connect solutions to the rigging process. Loose harness.
Analog gauges also require the use of harness 84-892990T01, T10 or T15.

2006 and newer Non DTS Outboards from 25 Hp to 250 HP- 14 Pin Connectors
All MCM / MIE engines equiped with 14 pin connectors

84-896537T40

40 ft. harness (896537A40) with new 14 pin connector for the engine and additional connectors that allow easy quick connect solutions to the rigging process. Loose harness.
Analog gauges also require the use of harness 84-892990T01, T10 or T15.

2006 and newer Non DTS Outboards from 25 Hp to 250 HP- 14 Pin Connectors
All MCM / MIE engines equiped with 14 pin connectors

HARNESS - NON DTS 14 PIN- ANALOG GAUGE



84-892990T01

This harness will connect directly to the non DTS harness at the helm. It will allow you to connect to analog gauges on the dash and allows the choke function to work on the 8/9.9/15/20 FourStroke carbureted outboards with serial numbers beginning with "0R". 5 ft long Used with 84-896537__ harness

2006 and newer Non DTS Outboards from 25 Hp to 250 HP- 14 Pin Connectors
All MCM / MIE engines equiped with 14 pin connectors

84-892990T10

This harness will connect directly to the non DTS harness at the helm. It will allow you to connect to analog gauges on the dash. 10 ft long Used with 84-896537__ harness

2006 and newer Non DTS Outboards from 25 Hp to 250 HP- 14 Pin Connectors
All MCM / MIE engines equiped with 14 pin connectors

84-892990T15

This harness will connect directly to the non DTS harness at the helm. It will allow you to connect to analog gauges on the dash. 15 ft long Used with 84-896537__ harness

2006 and newer Non DTS Outboards from 25 Hp to 250 HP- 14 Pin Connectors
All MCM / MIE engines equiped with 14 pin connectors

HARNESS EXTENSION- 10 PIN



84-8M0058668

This harness extension will allow you to increase the length by 6 feet of the 10 pin drop for instruments. The extension will work with Side Mount controls as well as any 896537 series main engine / boat harness.

CHOKE HARNESS



84-896537T99

Allows a 14 pin harness to provide choke function for a carbureted engine when a remote control is used. Use this harness only if there are no gauges to be hooked up.

INSTRUMENT HARNESS



84-812475A 3

3 ft.(915 mm) 10 pin harness
Fits 1986 and newer MCM/MIE gasoline engines.

84-812475A20

20 ft.(6.1 m) 10 pin harness
Fits 1986 and newer MCM/MIE gasoline engines.

84-812475A25

25 ft.(7.62 m) 10 pin harness
Fits 1986 and newer MCM/MIE gasoline engines.

INSTRUMENT HARNESS



84-860618

1 m (3.3 ft.) harness, 21 pin Deutsch connector.
Fits all diesel models.

LIGHT - DASH MOUNTED - CATALYST MALFUNCTION



8M0046481

Light will go on indicating that a malfunction has ocurred with your catalyst on your engine. This means you will need to get your engine serviced soon. Works similar to your check Engine light in your truck or car. (harness to be sold seperately) Harness numbers for single helms (M0048049,8M0048054,8M0048055,8M0048056,8M0048057, 8M0048058,8M0048059)

Mercruiser products that are equipped with a catalyst

OBDN ADAPTER HARNESS (EC)



84-8M0053083

Adapter harness for installation of the OBDM light kit

This adapter is needed for EC engines prior to the base engine harness change. 3.0 Alpha MPI EC (serial number 1A610609 and below), 5.0 Brave DTS MPI EC (serial number 1A612238 and below), 5.0 Alpha MPI EC (serial number 1A610409 and below),350 Mag Bravo EC (serial number 1A610686 and below) and 350 Mag Bravo DTS EC (serial number 1A610698)

HARNESS - MALFUNCTION LIGHT



84-8M0048049

This harness is to connect the OBDM malfunction light for single helm applications. 10 ft.

All Mercruiser engines that have a catalyst

84-8M0048054

This harness is to connect the OBDM malfunction light for single helm applications. 15 ft.

All Mercruiser engines that have a catalyst

84-8M0048055

This harness is to connect the OBDM malfunction light for single helm applications. 20 ft.

All Mercruiser engines that have a catalyst

84-8M0048056

This harness is to connect the OBDM malfunction light for single helm applications. 25 ft.

All Mercruiser engines that have a catalyst

84-8M0048057

This harness is to connect the OBDM malfunction light for single helm applications. 30 ft.

All Mercruiser engines that have a catalyst

84-8M0048058

This harness is to connect the OBDM malfunction light for single helm applications. 40 ft.

All Mercruiser engines that have a catalyst

84-8M0048059

This harness is to connect the OBDM malfunction light for single helm applications. 50 ft.

All Mercruiser engines that have a catalyst

HARNESS - MALFUNCTION LIGHT



84-8M0048040

This harness is to connect the OBDM malfunction light for dual helm applications. 10 ft.

All Mercruiser engines that have a catalyst

84-8M0048043

This harness is to connect the OBDM malfunction light for dual helm applications. 15 ft.

All Mercruiser engines that have a catalyst

84-8M0048044

This harness is to connect the OBDM malfunction light for dual helm applications. 20 ft.

All Mercruiser engines that have a catalyst

84-8M0048045

This harness is to connect the OBDM malfunction light for dual helm applications. 25 ft.

All Mercruiser engines that have a catalyst

84-8M0048046

This harness is to connect the OBDM malfunction light for dual helm applications. 30 ft.

All Mercruiser engines that have a catalyst

84-8M0048047

This harness is to connect the OBDM malfunction light for dual helm applications. 40 ft.

All Mercruiser engines that have a catalyst

84-8M0048048

This harness is to connect the OBDM malfunction light for dual helm applications. 50 ft.

All Mercruiser engines that have a catalyst

INSTRUMENT EXTENSION HARNESSES (GAS ENGINES)

Fits 1986 and newer MCM/MIE gasoline engines.

INSTRUMENT EXTENSION HARNESS



84-812441A10

10 ft.(3.05 m) harness, 9 lead harness.
Used as harness extension or to complete two station installations.

84-812441A15

15 ft.(4.57 m) harness, 9 lead harness.
Used as harness extension or to complete two station installations.

84-812441A20

20 ft.(6.1 m) harness, 9 lead harness.
Used as harness extension or to complete two station installations.

84-812835A30

30 ft.(9.14 m) harness, 9 lead harness.
Used as harness extension or to complete two station installations.

84-812835A45

45 ft.(13.72 m) harness, 9 lead harness.
Used as harness extension or to complete two station installations.

EXTENSION HARNESS - 14 PIN



84-892451T06

6 ft. (1.8 meter) data harness. Provides data link between DTS engine and command module harness.

Works with all engines equipped with 14-pin connectors.

84-892451T10

10 ft. (3.0 meter) data harness. Provides data link between DTS engine and command module harness.

Works with all engines equipped with 14-pin connectors.

84-892451T15

15 ft. (4.6 meter) data harness. Provides data link between DTS engine and command module harness.

Works with all engines equipped with 14-pin connectors.

84-892451T20

20 ft. (6.1 meter) data harness. Provides data link between DTS engine and command module harness.

Works with all engines equipped with 14-pin connectors.

84-892451T25

25 ft. (7.6 meter) data harness. Provides data link between DTS engine and command module harness.

Works with all engines equipped with 14-pin connectors.

84-892451T30

30 ft. (9.1 meter) data harness. Provides data link between DTS engine and command module harness.

Works with all engines equipped with 14-pin connectors.

84-892451T40

40 ft. (12.21 meter) data harness. Provides data link between DTS engine and command module harness.

Works with all engines equipped with 14-pin connectors.

INSTRUMENT EXTENSION HARNESSES (DIESEL)

All 1994-2000 MCM/MIE diesel models (except D-Tronic models) require both an 8 lead and a 9 lead extension harness to connect instumentation to the engine.

EXTENSION HARNESS



84- 17829A10

10 ft.(3.05 m) harness, 8 lead harness.
Used as harness extension or to complete two station installations.

84- 17829A20

20 ft.(6.1 m) harness, 8 lead harness.
Used as harness extension or to complete two station installations.

INSTRUMENT EXTENSION HARNESS



84-812441A10

10 ft.(3.05 m) harness, 9 lead harness.
Used as harness extension or to complete two station installations.

84-812441A15

15 ft.(4.57 m) harness, 9 lead harness.
Used as harness extension or to complete two station installations.

84-812441A20

20 ft.(6.1 m) harness, 9 lead harness.
Used as harness extension or to complete two station installations.

INSTRUMENT EXTENSION HARNESS



84-855390

20 ft.(6 m) harness

Fits (1997-2000) D2.8L and D4.2L Electronic diesel models

INSTRUMENT EXTENSION HARNESS



84-860615002

4 m (13.2 ft.) harness, 21 pin Deutsch connector

Fits D1.7L , 2001 and newer D4.2L, D2.8L and 4.2L ES and EI; 1997 and newer D7.3L ES diesel models.

84-860616002

8 m (26.3 ft.) harness, 21 pin Deutsch connector

Fits MCM/MIE D1.7L ; also 2001 and newer D4.2L, D2.8L and 4.2L ES & EI diesel models; also fits 1997 and newer D7.3L Electronic diesel models

HARNESS ADAPTER



84-860622

21 pin female Deutsche connector to 8 pin & 9 pin female connector

Adapts newer diesel engines with 21 pin Deutsch connector engine harnesses to older diesel engines instrument harness with the 8 pin & 9 pin connectors.

HARNESS ADAPTER



84-860623

Adapts extension harnesses 84-860615 or 84-860616 to instrument harness 84-855389 (used on 1997-2000 D2.8L and 4.2L D-Tronic diesel models).

HARNESS ADAPTER



84-860624

Adapts engine harness 84-806389A 2 (used on 1994-1997 D3.0L, D3.6L and D4.2L diesel models) to extension harnesses 84-860615 or 84-860616.

HARNESS ADAPTER



84-860625

Adapts engine harness 84-855509 or 84-803626 (used on 1997 & up D2.8L and D4.2L ES and EI diesel models) to extension harnesses 84-860615 or 84-860616. 21 pin to 17 pin connector

14 PIN DATA HARNESSES

EXTENSION HARNESS - 14 PIN



84-892451T06

6 ft. (1.8 meter) data harness. Provides data link between DTS engine and command module harness.

Works with all engines equipped with 14-pin connectors.

84-892451T10

10 ft. (3.0 meter) data harness. Provides data link between DTS engine and command module harness.

Works with all engines equipped with 14-pin connectors.

84-892451T15

15 ft. (4.6 meter) data harness. Provides data link between DTS engine and command module harness.

Works with all engines equipped with 14-pin connectors.

84-892451T20

20 ft. (6.1 meter) data harness. Provides data link between DTS engine and command module harness.

Works with all engines equipped with 14-pin connectors.

84-892451B20

20 ft. (6.1 meter) data harness. Provides data link between DTS engine and command module harness.
Bulk Pack - 6 harnesses to a box.

Works with all engines equipped with 14-pin connectors.

Priced individually, sold @ multiples of 6

84-892451T25

25 ft. (7.6 meter) data harness. Provides data link between DTS engine and command module harness.

Works with all engines equipped with 14-pin connectors.

84-892451B25

25 ft. (7.6 meter) data harness. Provides data link between DTS engine and command module harness.
Bulk Pack -6 harnesses to a box.

Works with all engines equipped with 14-pin connectors.

Priced individually, sold @ multiples of 6

84-892451T30

30 ft. (9.1 meter) data harness. Provides data link between DTS engine and command module harness.

Works with all engines equipped with 14-pin connectors.

84-892451T40

40 ft. (12.21 meter) data harness. Provides data link between DTS engine and command module harness.

Works with all engines equipped with 14-pin connectors.

14 PIN EXTENSION HARNESS



84-899889T05

5 ft. 14-pin Extension Harness

All Diesel Engines

84-899889T10

10 ft. 14-pin Extension Harness

All Diesel Products

84-899889T15

15 ft. 14-pin Extension Harness

All Diesel Engines

84-899889T20

20 ft. 14-pin Extension Harness

All Diesel Engines

14 PIN EXTENSION HARNESS



84-899889T25

25 ft. 14-pin Extension Harness

All Diesel Engines

84-899889T30

30 ft. 14-pin Extension Harness

All Diesel Engines

84-899889T35

35 ft. 14-pin Extension Harness

All Diesel Engines

84-899889T40

40 ft. 14-pin Extension Harness

All Diesel Engines

14 PIN EXTENSION HARNESS



84-899889T45

45 ft. 14-pin Extension Harness

All Diesel Engines

84-899889T50

50 ft. 14-pin Extension Harness

All Diesel Engines

84-899889T55

55 ft. 14-pin Extension Harness

All Diesel Engines

84-899889T60

60 ft. 14-pin Extension Harness

All Diesel Engines

DATA HARNESS- 14 PIN (LOW LOSS)



84-898138T70

Data harness built for long run installations (10 gage wire - internal power/wake) 70 ft. Provides data link between DTS engine and command module harness.

All 2005 and newer DTS engines (Verado/OptiMax/MCM)

84-898138T80

Data harness built for long run installations (10 gage wire - internal power/wake) 80 ft. Provides data link between DTS engine and command module harness.

All 2005 and newer DTS engines (Verado/OptiMax/MCM)

84-898138T90

Data harness built for long run installations (10 gage wire - internal power/wake) 90 ft. Provides data link between DTS engine and command module harness.

All 2005 and newer DTS engines (Verado/OptiMax/MCM)

84-898138T10

Data harness built for long run installations (10 gage wire - internal power/wake) 100 ft. Provides data link between DTS engine and command module harness.

All 2005 and newer DTS engines (Verado/OptiMax/MCM)

84-898138T11

Data harness built for long run installations (10 gage wire - internal power/wake) 110 ft. Provides data link between DTS engine and command module harness.

All 2005 and newer DTS engines (Verado/OptiMax/MCM)

84-898138T12

Data harness built for long run installations (10 gage wire - internal power/wake) 120 ft. Provides data link between DTS engine and command module harness.

All 2005 and newer DTS engines (Verado/OptiMax/MCM)

10 PIN (YELLOW) DATA HARNESSES

CAN DATA HARNESS - 10 PIN - NO RESISTORS DTS (YELLOW)



84-879312T44
Contains CAN 1,2, and 3. 1 ft. (0.3 meter) SmartCraft data harness without resistors
Provides data link between SmartCraft System CAN Bus components on DTS applications (Digital Throttle & Shift)

84-879312T45
Contains CAN 1,2, and 3. 2 ft. (0.6 meter) SmartCraft data harness without resistors
Provides data link between SmartCraft System CAN Bus components on DTS applications (Digital Throttle & Shift)

879312T46
Contains CAN 1,2, and 3. 3 ft. (0.9 meter) SmartCraft data harness without resistors
Provides data link between SmartCraft System CAN Bus components on DTS applications (Digital Throttle & Shift)

84-879312T47
Contains CAN 1,2, and 3. 4 ft. (1.2 meter) SmartCraft data harness without resistors
Provides data link between SmartCraft System CAN Bus components on DTS applications (Digital Throttle & Shift)

CAN DATA HARNESS - 10 PIN - NO RESISTORS (YELLOW)



84-879969T 6
6 ft. (1.8 meter) SmartCraft data harness without resistors
Provides data link between SmartCraft CAN P, X and H components.

84-879969B 6
6 ft. (1.8 meter) SmartCraft data harness without resistors
Provides data link between SmartCraft CAN P, X and H components.
Priced individually, sold @ multiples of 6

84-879969T10
10 ft. (3.0 meter) SmartCraft data harness without resistors
Provides data link between SmartCraft CAN P, X and H components.

84-879969B10
10 ft. (3.0 meter) SmartCraft data harness without resistors
Provides data link between SmartCraft CAN P, X and H components.
Priced individually, sold @ multiples of 6

84-879969T15
15 ft. (4.6 meter) SmartCraft data harness without resistors
Provides data link between SmartCraft CAN P, X and H components.

84-879969T20
20 ft. (6.1 meter) SmartCraft data harness without resistors
Provides data link between SmartCraft CAN P, X and H components.

84-879969T30
30 ft. (9.1 meter) SmartCraft data harness without resistors
Provides data link between SmartCraft CAN P, X and H components.

CAN DATA HARNESS - 10 PIN WITH ONE RESISTOR (YELLOW)



84-879980T10
10 ft. (3.0 meter) SmartCraft data harness with one resistor
Provides data link between SmartCraft CAN P, X and H components.

84-879980B10
10 ft. (3.0 meter) SmartCraft data harness with one resistor
Provides data link between SmartCraft CAN P, X and H components.
Priced individually, sold @ multiples of 12

84-879980T15
15 ft. (4.6 meter) SmartCraft data harness with one resistor
Provides data link between SmartCraft CAN P, X and H components.

84-879980B15
15 ft. (4.6 meter) SmartCraft data harness with one resistor
Provides data link between SmartCraft CAN P, X and H components.
Priced individually, sold @ multiples of 6

84-879980T20
20 ft. (6.1 meter) SmartCraft data harness with one resistor
Provides data link between SmartCraft CAN P, X and H components.

84-879980T30
30 ft. (9.1 meter) SmartCraft data harness with one resistor
Provides data link between SmartCraft CAN P, X and H components.

84-879980B30
30 ft. (9.1 meter) SmartCraft data harness with one resistor
Provides data link between SmartCraft CAN P, X and H components.
Priced individually, sold @ multiples of 12

10 PIN (BLUE) DATA HARNESSES

CAN DATA HARNESS - 10 PIN NON DTS WITH RESISTORS (BLUE)



84-879982T20
20 ft. (6.1 meter) SmartCraft data harness with (2) termination resistors
Includes connections for horn and link gauge. Provides data link between SmartCraft CAN P Components.

84-879982B20

20 ft. (6.1 meter) SmartCraft data harness with (2) termination resistors

Includes connections for horn and link gauge. Provides data link between SmartCraft CAN P Components.

Priced individually, sold @ multiples of 12

84-879982T25

25 ft. (7.6 meter) SmartCraft data harness with (2) termination resistors

Includes connections for horn and link gauge. Provides data link between SmartCraft CAN P Components.

84-879982T30

30 ft. (9.1 meter) SmartCraft data harness with (2) termination resistors

Includes connections for horn and link gauge. Provides data link between SmartCraft CAN P Components.

84-879982B30

30 ft. (9.1 meter) SmartCraft data harness with (2) termination resistors

Includes connections for horn and link gauge. Provides data link between SmartCraft CAN P Components.

Priced individually, sold @ multiples of 12

CAN DATA HARNESS - 10 PIN - NO RESISTORS NON DTS (BLUE)



84-879968T 6

6 ft. (1.8 meter) SmartCraft data harness without resistors and no additional connections

Provides data link between SmartCraft CAN P Components.

84-879968B 6

6 ft. (1.8 meter) SmartCraft data harness without resistors and no additional connections

Provides data link between SmartCraft CAN P Components.

Priced individually, sold @ multiples of 12

84-879968T10

10 ft. (3.0 meter) SmartCraft data harness without resistors and no additional connections

Includes connections for horn and link gauge. Provides data link between SmartCraft CAN P Components.

84-879968B10

10 ft. (3.0 meter) SmartCraft data harness without resistors and no additional connections

Provides data link between SmartCraft System CAN Bus Components

Priced individually, sold @ multiples of 12

84-879968T15

15 ft. (4.6 meter) SmartCraft data harness without resistors and no additional connections

Provides data link between SmartCraft System CAN Bus Components

84-879968T20

20 ft. (6.1 meter) SmartCraft data harness without resistors and no additional connections

Provides data link between SmartCraft System CAN Bus Components

84-879968T25

25 ft. (7.6 meter) SmartCraft data harness without resistors and no additional connections

Provides data link between SmartCraft System CAN Bus Components

84-879968T30

30 ft. (9.1 meter) SmartCraft data harness without resistors and no additional connections

Provides data link between SmartCraft System CAN Bus Components

84-879968B30

30 ft. (9.1 meter) SmartCraft data harness without resistors and no additional connections

Provides data link between SmartCraft System CAN Bus Components

Priced individually, sold @ multiples of 12

84-879968T50

50 ft (15.2 meter) SmartCraft data harness without resistors and no additional connections

Provides data link between SmartCraft System CAN Bus Components

84-879968T80

80 ft (24.4 meter) SmartCraft data harness without resistors and no additional connections

Provides data link between SmartCraft System CAN Bus Components

CAN DATA HARNESS - 10 PIN - ONE RESISTOR NON DTS (BLUE)



84-879981T10

10 ft. (3.0 meter) SmartCraft data harness with one resistor

Provides data link between SmartCraft System CAN Bus Components

84-879981T15

15 ft. (4.6 meter) SmartCraft data harness with one resistor

Provides data link between SmartCraft System CAN Bus Components

84-879981T20

20 ft. (6.1 meter) SmartCraft data harness with one resistor

Provides data link between SmartCraft System CAN Bus Components

84-879981B20

20 ft. (6.1 meter) SmartCraft data harness with one resistor

Provides data link between SmartCraft System CAN Bus Components

Priced individually, sold @ multiples of 12

84-879981T25

25 ft. (7.6 meter) SmartCraft data harness with one resistor

Provides data link between SmartCraft System CAN Bus Components

84-879981T30

30 ft. (9.1 meter) SmartCraft data harness with one resistor

Provides data link between SmartCraft System CAN Bus Components

84-879981T50

50 ft. (15.2 meter) SmartCraft data harness with one resistor

Provides data link between SmartCraft System CAN Bus Components

84-879981T80

80 ft. (24.4 meter) SmartCraft data harness with one resistor

Provides data link between SmartCraft System CAN Bus Components

ADAPTER HARNESSES - 14 PIN

DUAL HELM ADAPTER KIT- DTS



84-893330K01

Used with dual stations/ dual helms - Requires one for single-engine installation and two for dual-engine installation. Adapts primary 14-pin data harness to dual helms.

ADAPTER HARNESSES - 2 PIN

2 PIN LINK HARNESS- CAN



84-893452A01

Used to link CAN Networks together.

2 PIN "Y" ADAPTER HARNESS - LINK ADAPTER



84-896370T01

Used on DTS engines that require extended length CAN networks.

ADAPTER HARNESSES

ADAPTER - NON DTS 14 PIN TO 8 PIN

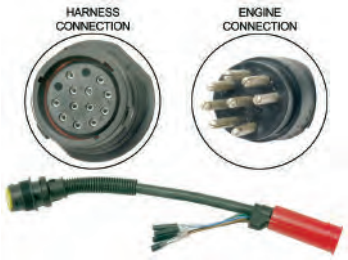

84-896539T01

1 ft adapter that allows you to connect a 14 pin (Female) boat harness to an 8 pin (Male) engine connection. Includes bracket and screws

2006 and newer Non DTS Outboards from 25 Hp to 250 HP- 14 Pin Connectors

84-896539T05

5 ft adapter that allows you to connect a 14 pin (Female) boat harness to a 8 pin (Male) engine connection. Includes bracket and screws

2006 Non DTS Outboards from 25 Hp to 250 HP- 14 pin connector

84-896539T08

8 ft adapter that allows you to connect a 14 pin (Female) boat harness to a 8 pin (Male) engine connection. Includes bracket and screws

2006 Non DTS Outboards from 25 Hp to 250 HP- 14 pin connector

ADAPTER - NON DTS 8 PIN TO 14 PIN

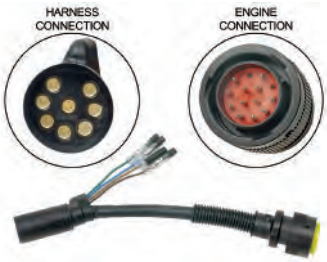

84-896542T01

1 ft adapter that allows you to connect 8 pin (Female) boat harness to the 14 pin (Male) engine connection. Includes bracket and screws

2006 Non DTS Outboards from 25 Hp to 250 HP- 14 pin connector

84-896542T05

5 ft adapter that allows you to connect 8 pin (Female) boat harness to the 14 pin (Male) engine connection. Includes bracket and screws

2006 Non DTS Outboards from 25 Hp to 250 HP- 14 pin connector

ADAPTER - NON DTS 8 PIN TO 14 PIN

84-896542T08

8 ft adapter that allows you to connect 8 pin (Female) boat harness to the 14 pin (Male) engine connection. Includes bracket and screws

2006 Non DTS Outboards from 25 Hp to 250 HP- 14 pin connector

ADAPTER - NON DTS 10 PIN TO 14 PIN



84-858740T06

6 ft adapter that allows you to connect 10 pin (Female) boat harness to the 14 pin (Female) engine connection.

2006 Non DTS 75, 90, 115 HP 4 stroke EFI

ADAPTER - NON DTS 8 PIN TO 14 PIN

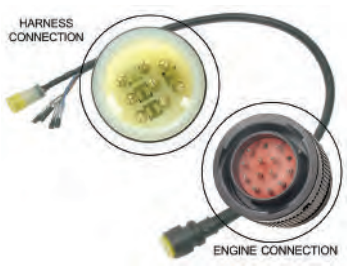

84-896540T01

3 ft adapter that allows you to connect 8 pin (Male) boat harness to the 14 pin (Male) engine connection.

2005, 2006 - 8/9.9 HP 4 stroke and newer

ADAPTER - NON DTS 14 PIN TO 8 PIN



84-896541T01

3 ft adapter that allows you to connect 14 pin (Female) boat harness to the 8 pin (Female) engine connection.

2005, 2006 - 8/9.9 HP 4 stroke and newer

ADAPTER - NON DTS 14 PIN TO 8 PIN

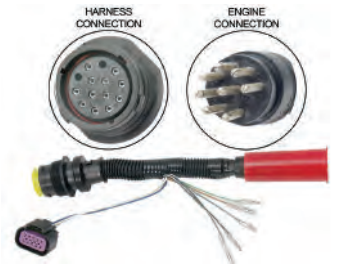

84-892092T01

1 ft adapter that allows you to connect 14 pin (Female) boat harness to the 8 pin (Male) engine connection.

Older Outboards that are SmartCraft compatible engines

ADAPTER - NON DTS 10 PIN TO 14 PIN



84-892444T02

Adapter that allows you to connect engines that have the older 10 pin engine harness to the newer 14 pin helm harness

MCM/MIE engines that have the 10 pin engine harness.

ADAPTER - NON DTS 14 PIN TO 10 PIN

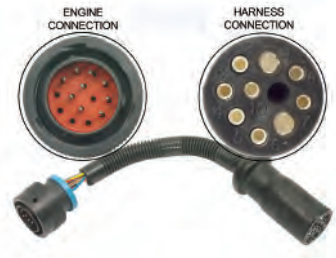

84-866337T01

Adapter that allows you to connect engines that have the newer 14 pin engine harness to the older 10 pin helm harness

MCM/MIE engines that have the 14 pin engine harness. Also used on Race product (outboards only) that have a 14 pin engine harness being connected to a 10 pin helm harness.

ADAPTER HARNESS- ANALOG GAUGE - MCM



84-866377T01

Mounts between the 14 pin Command Module harness and the data harness

DTS- MCM only

ACCESSORY HARNESSES

SC HARNESS ASSEMBLY- POWER HARNESS-HELM



84-888416T08

10 ft. harness. Used to reduce voltage drop when battery is located near the helm of the boat. Connects to junction box at the helm.

Used on all DTS engines.

84-888416T07

14 ft. harness. Used to reduce voltage drop when battery is located near the helm of the boat. Connects to junction box at the helm.

Used on all DTS engines.

HARNESS- 25 FT CLEAN POWER



84-896333T25

25 ft. harness. Used to reduce voltage drop when battery is located near the helm of the boat. Connects to junction box at the helm.

Used on all DTS Engines

POWER HARNESS-ENGINE



84-888416T04

14 ft. harness. Used to reduce voltage drop when battery is located near the helm of the boat. Connects to junction box at the helm.

All L4 SC Verados, 200/225 Opti DTS, 20 in. L6 Verados and MCM DTS and EC engines have this harness as part of the engine package. Must order loose for 25 in. and 30 in. L6 Verados.

HARNESS - POWER 25 FT



84-889244T01

25 ft Clean Power harness with heavy gauge (10 ga) wire for lower voltage drop. Use from crank battery to 2 pin connector on engine. DTS and MCM EC engines.

ACCESSORY POWER HARNESS / RELAY HARNESS KIT



84-899785K15

Used to provide accessory power to auxiliary loads when the keyswitch is in the "Run" or "Accessory" positions. Includes 40 amp relay, harness and 15 ft power cable with 40 amp fuse and three pole terminal block.

Used on 14-pin boat harnesses that have a 3-pin accessory power relay connector.

ACCESSORY POWER HARNESS / RELAY HARNESS KIT



84-899785K30

Used to provide accessory power to auxiliary loads when the keyswitch is in the "Run" or "Accessory" positions. Includes 40 amp relay, harness and 30 ft power cable with 40 amp fuse and three pole terminal block.

Used on 14-pin boat harnesses that have a 3-pin accessory power relay connector.

ACCESSORY POWER HARNESS KIT



84-899785K04

Accessory power cable is designed to connect battery to terminal block to provide connection point and power auxiliary loads. Includes 30 ft power cable with 40 amp fuse and 3 pole terminal block.

Used on 14-pin boat harnesses that have a 3-pin accessory power relay connector.

ACCESSORY POWER HARNESS KIT



84-899785K02

Accessory power cable is designed to connect battery to terminal block to provide connection point and power auxiliary loads. Includes 15 ft power cable with 40 amp fuse and 3 pole terminal block.

Used on 14-pin boat harness's that have a 3-pin accessory power relay connector.

ACCESSORY RELAY KIT



84-888429K11

Used in conjunction with accessory power harness to provide power to auxiliary loads.

Used on 14-pin boat harness's that have a 3-pin accessory power relay connector.

ACCESSORY RELAY HARNESS KIT



84-888429K12

Used to provide accessory power to auxiliary loads. Cable is connected to the junction box and provides power to loads when the key switch in in the "Run" position. Includes 40 amp relay and harness and 3 pole terminal block.

TVS NOISE SUPPRESSION HARNESS



84-8M0072192

Reduce noisy voltage spikes from Mercury solenoid coils (trim & tab).

Kit contains 2 harnesses that are used across solenoid coils to help reduce electrical noise.

JACKPLATE HARNESS ASSEMBLY

Image not Available.

84-881133T 1

Two 5 pin connector harness to 4 bullet (2 male, 2 female) connectors and 3 ring terminals

For jackplate control

IGNITION KEY SWITCHES

KEY SWITCH ASSEMBLY



54212A 7

3 ft.(915 mm) harness with ring terminals. Mounts in a 2-1/8 in.(54 mm) hole

Fits all MCM/MIE gasoline and diesel engines.

KEY SWITCH ASSEMBLY



F5H268

For dash mount installations in panels up to 1/2 in.(12.7 mm). "Push to choke" feature.

Fits all electric start Force outboards.

KEY SWITCH ASSEMBLY



F5H078

For dash mount installations in panels up to 1-7/16 in.(36 mm). "Push to choke" feature.

Fits all electric start Force outboards.

KEY SWITCH ASSEMBLY WITH CHOKE



87- 88107A13

3 ft.(915 mm) harness without audio warning horn. Has 6 pin connector that adapts to harness 84-896537K_ 14 pin harness. 3/4 inch cut out with housing

Used with 2 cycle engines that require push to choke feature.

KEY SWITCH -4 POSITION



87-893353A02

Four position keyswitch (Off, Accessory, Run and Start) Loose switch only. 7/8 in. cut out

Can be used on DTS as well as non DTS installations

KEY SWITCH KIT - 4 POSITION W/MOUNTING HARDWARE



87-893353A03

Four position keyswitch (Off, Accessory, Run and Start) Includes keyswitch , key cover, bezel, 2 1/8 in. Dia. mounting housing and mounting hardware. 7/8 in. cut out

Can be used on DTS as well as non DTS installations

KEY SWITCH KIT - 4 POSITION MATCHED KEYS-DUALS



87-893353A04

Four position keyswitch- dual engines (Off, Accessory, Run and Start) Includes matched keyswitch , key cover, bezel, 2 1/8 in. Dia. mounting housing and mounting hardware. 7/8 in. cut out.

Dual engine - matched key set. Can be used on DTS as well as non DTS installations

KEY SWITCH KIT - 4 POSITION MATCHED KEYS-DUALS



87-893353T04

Four position keyswitch- dual engines (Off, Accessory, Run and Start) Includes matched keyswitch and mounting hardware. 7/8 in. cut out. Does not include housing

Dual engine - matched key set. Can be used on DTS as well as non DTS installations

KEY SWITCH KIT - 4 POSITION MATCHED KEYS-TRIPLES



87-893353A05

Four position keyswitch- triple engines (Off, Accessory, Run and Start) Includes matched keyswitch , key cover, bezel, 2 1/8 in. Dia. mounting housing and mounting hardware. 7/8 in. cut out.

Triple engine - matched key set

KEY SWITCH KIT - 4 POSITION MATCHED KEYS-QUADS



87-893353A06

Four position keyswitch-Quad engines (Off, Accessory, Run and Start) Includes matched keyswitch , key cover, bezel, 2 1/8 in. Dia. mounting housing and mounting hardware. 7/8 in. cut out.

Quad engine - matched key set

KEY SWITCH -3 POSITION WITH DECAL/WASHER



87-897716K01

Three position keyswitch with shorter key and mounting length (Off, Run and Start) Loose switch only. 3/4 in. cut out. Includes switch with decal and washer.

Can be used on DTS as well as Non DTS installations.

KEY SWITCH -3 POSITION WITH DECAL/WASHER



87-897716K02

Three position keyswitch with shorter key and mounting length (Off, Run and Start) Loose switch only. 3/4 in. cut out. Includes switch with decal and washer. Matched set for dual engine installs

Can be used on DTS as well as Non DTS installations. Matched keyswitches for dual installations

KEY SWITCH -3 POSITION WITH DECAL/WASHER



87-897716K03

Three position keyswitch with shorter key and mounting length (Off, Run and Start) Loose switch only. 3/4 in. cut out. Includes switch with decal and washer. Matched Key set for Triple engine installs

Can be used on DTS as well as Non DTS installations. Matched keyswitches for Triple installations

KEY SWITCH -3 POSITION WITH DECAL/WASHER



87-897716K04

Three position keyswitch with shorter key and mounting length (Off, Run and Start) Loose switch only. 3/4 in. cut out. Includes switch with decal and washer. Matched Key set for Quad engine installs

Can be used on DTS as well as Non DTS installations. Matched keyswitches for Quad installations

KEY SWITCH -3 POSITION HOUSING



879305A01

New keyswitch housing kit for 897716 series 3 position keyswitch. Kit includes 2 inch (52 MM) housing with mounting disc and bezel. Spin nut included in kit for easy mounting. (Key Switch is not included in this kit)

Can be used on DTS as well as Non DTS installations.

DECAL/WASHER KIT- 3 POSITION KEY SWITCH



899203A01

Used with 87-897716 when not supplied in harness kit

KEY SWITCH ASSEMBLY



87- 88107A 3

3 ft.(915 mm) harness without audio warning horn. Has bullet connectors that adapt to harness 84-84711M.

Fits (Japanese origin) Mariner 30, 40 (2 cyl. - w/o integral oil injection) and 55 (2 cyl.) outboards used with optional remote controls.

HARNESS ASSEMBLY



84- 84711M

16 ft.(4.87 m) 7-wire harness. Has bullet connectors that adapt to key switch 87-88107A 3.

Fits (Japanese origin) Mariner 30, 40 (2 cyl. - w/o integral oil injection) and 55 (2 cyl.) outboards used with optional remote controls.

KEY SWITCH KIT



87- 88107A 5

KEY SWITCH KIT



87- 88107A10

Three position keyswitch (Off, Run and Start) Includes keyswitch and mounting hardware.

2004 OptiMax 225 DTS outboards and 496 Mag MerCruiser DTS sterndrive and inboard engines.

KEY SWITCH KIT



87- 88107T09

Three position keyswitch (Off, Run and Start) Push to choke Keyswitch

2004 OptiMax 225 DTS outboards and 496 Mag MerCruiser DTS sterndrive and inboard engines.

KEY SWITCH ASSEMBLY WITH CHOKE



87- 88107A13

3 ft.(915 mm) harness without audio warning horn. Has 6 pin connector that adapts to harness 84-896537K_ 14 pin harness. 3/4 inch cut out with housing

Used with 2 cycle engines that require push to choke feature.

KEY SWITCH KIT



87- 88107T12

Three position keyswitch (Off, Run and Start) Push to Choke Keyswitch
Used with 2 cycle engines that require push to choke feature.

KEY SWITCH KIT

Image not Available.

87-893449T01

3 position Key Switch Kit

IGNITION KEY SWITCH WITH HARNESSES

Mounts in a 2-1/8 in.(54 mm) hole. Includes warning horn and electrical connections for power trim, instrumentation and lanyard stop switch.

KEY SWITCH W/ HARNESS



84-816626A 2

2 ft.(610 mm) harness with audio warning horn.

Fits Mercury/Mariner 6 hp. and Higher (2 cycle, USA & BEL Origin) outboards, Mariner 30/40 hp. with oil injection (2 cycle, Japanese Origin), all Mercury / Mariner 4-Stroke (USA Origin) outboards, Force 40 hp. and Higher (1993 and Newer) and Mercury Jet Drives. When used with MY2005 and newer 8/9.9 hp. FourStroke outboards an adapter harness 892473A01 is required.

84-816626A 8

8 ft.(2.44 m) harness with audio warning horn.

Fits Mercury/Mariner 6 hp. and Higher (2 cycle, USA & BEL Origin) outboards, Mariner 30/40 hp. with oil injection (2 cycle, Japanese Origin), all Mercury/Mariner 4-Stroke (USA Origin) outboards, Force 40 hp. and Higher (1993 and Newer) and Mercury Jet Drives. When used with MY2005 and newer 8/9.9 hp. FourStroke outboards an adapter harness 892473A01 is required.

84-816626A11

11 ft.(3.35 m) harness with audio warning horn.

Fits Mercury/Mariner 6 hp. and Higher (2 cycle, USA & BEL Origin) outboards, Mariner 30/40 hp. with oil injection (2 cycle, Japanese Origin), all Mercury/Mariner 4-Stroke (USA Origin) outboards, Force 40 hp. and Higher (1993 and Newer) and Mercury Jet Drives. When used with MY2005 and newer 8/9.9 hp. FourStroke outboards an adapter harness 892473A01 is required.

84-816626A15

15 ft.(4.57 m) harness with audio warning horn.

Fits Mercury/Mariner 6 hp. and Higher (2 cycle, USA & BEL Origin) outboards, Mariner 30/40 hp. with oil injection (2 cycle, Japanese Origin), all Mercury/Mariner 4-Stroke (USA Origin) outboards, Force 40 hp. and Higher (1993 and Newer) and Mercury Jet Drives. When used with MY2005 and newer 8/9.9 hp. FourStroke outboards an adapter harness 892473A01 is required.

84-816626A20

20 ft.(6.1 m) harness with audio warning horn.

Fits Mercury/Mariner 6 hp. and Higher (2 cycle, USA & BEL Origin) outboards, Mariner 30/40 hp. with oil injection (2 cycle, Japanese Origin), all Mercury/Mariner 4-Stroke (USA Origin) outboards, Force 40 hp. and Higher (1993 and Newer) and Mercury Jet Drives. When used with MY2005 and newer 8/9.9 hp. FourStroke outboards an adapter harness 892473A01 is required.

84-816626A24

25 ft.(7.6 m) harness with audio warning horn.

Fits Mercury / Mariner 6 hp. and Higher (2 cycle, USA & BEL Origin) outboards, Mariner 30/40 hp. with oil injection (2 cycle, Japanese Origin), all Mercury / Mariner 4-Stroke (USA Origin) outboards, Force 40 hp. and Higher (1993 and Newer) and Mercury Jet Drives. When used with MY2005 and newer 8/9.9 hp. FourStroke outboards an adapter harness 892473A01 is required.

84-816626A25

25 ft.(7.6 m) harnesses with audio warning horn. Packaged with 2 harnesses with matched keys for dual engine applications.

Fits Mercury / Mariner 6 hp. and Higher (2 cycle, USA & BEL Origin) outboards, Mariner 30/40 hp. with oil injection (2 cycle, Japanese Origin), all Mercury / Mariner 4-Stroke (USA Origin) outboards, Force 40 hp. and Higher (1993 and Newer) and Mercury Jet Drives.

84-816626A29

30 ft.(9.1 m) harnesses with audio warning horn.

Fits Mercury / Mariner 6 hp. and Higher (2 cycle, USA & BEL Origin) outboards, Mariner 30/40 hp. with oil injection (2 cycle, Japanese Origin), all Mercury / Mariner 4-Stroke (USA Origin) outboards, Force 40 hp. and Higher (1993 and Newer) and Mercury Jet Drives.

84-816626A30

30 ft.(9.1 m) harnesses with audio warning horn. Packaged with 2 harnesses with matched keys for dual engine applications.

Fits Mercury / Mariner 6 hp. and Higher (2 cycle, USA & BEL Origin) outboards, Mariner 30/40 hp. with oil injection (2 cycle, Japanese Origin), all Mercury / Mariner 4-Stroke (USA Origin) outboards, Force 40 hp. and Higher (1993 and Newer) and Mercury Jet Drives.

KEY SWITCH W/ HARNESS - NON DTS 14 PIN



84-896537K02

2 ft. harness (896537A02) with new 14 pin connector for the engine and additional connectors that allow easy quick connect solutions to the rigging process. Included in this kit is also the new 3 position water-proof high quality keyswitch. (897716)

2006 and newer Non DTS Outboards from 25 Hp to 250 HP- 14 Pin Connectors All MCM / MIE engines equiped with 14 pin connectors

84-896537K08

8 ft. harness (896537A08) with new 14 pin connector for the engine and additional connectors that allow easy quick connect solutions to the rigging process. Included in this kit is also the new 3 position water-proof high quality keyswitch. (897716)

2006 and newer Non DTS Outboards from 25 Hp to 250 HP- 14 Pin Connectors All MCM / MIE engines equiped with 14 pin connectors.

84-896537K11

11 ft. harness (896537A11) with new 14 pin connector for the engine and additional connectors that allow easy quick connect solutions to the rigging process. Included in this kit is also the new 3 position water-proof high quality keyswitch. (897716)

2006 and newer Non DTS Outboards from 25 Hp to 250 HP- 14 Pin Connectors All MCM / MIE engines equiped with 14 pin connectors.

84-896537K15

15 ft. harness (896537A15) with new 14 pin connector for the engine and additional connectors that allow easy quick connect solutions to the rigging process. Included in this kit is also the new 3 position water-proof high quality keyswitch. (897716)

2006 and newer Non DTS Outboards from 25 Hp to 250 HP- 14 Pin Connectors All MCM / MIE engines equiped with 14 pin connectors.

84-896537K20

20 ft. harness (896537A20) with new 14 pin connector for the engine and additional connectors that allow easy quick connect solutions to the rigging process. Included in this kit is also the new 3 position water-proof high quality keyswitch. (897716)

2006 and newer Non DTS Outboards from 25 Hp to 250 HP- 14 Pin Connectors All MCM / MIE engines equiped with 14 pin connectors

84-896537K24

25 ft. harness (896537A24) with new 14 pin connector for the engine and additional connectors that allow easy quick connect solutions to the rigging process. Included in this kit is also the new 3 position water-proof high quality keyswitch. (897716)

2006 and newer Non DTS Outboards from 25 Hp to 250 HP- 14 Pin Connectors All MCM / MIE engines equiped with 14 pin connectors

84-896537K25

2 each of 25 ft. harness (896537A24) with new 14 pin connector for the dual engine applications and additional connectors that allow easy quick connect solutions to the rigging process. Included in this kit is also the new 3 position water-proof high quality keyswitch (Matched keyswitch for dual engine applications). (897716K02)

2006 and newer Non DTS Outboards from 25 Hp to 250 HP- 14 Pin Connectors All MCM / MIE engines equiped with 14 pin connectors

84-896537K29

30 ft. harness (896537A29) with new 14 pin connector for the engine and additional connectors that allow easy quick connect solutions to the rigging process. Included in this kit is also the new 3 position water-proof high quality keyswitch. (897716)

2006 and newer Non DTS Outboards from 25 Hp to 250 HP- 14 Pin Connectors All MCM / MIE engines equiped with 14 pin connectors

84-896537K30

2 each of 30 ft. harness (896537A29) with new 14 pin connector for the dual engine applications and additional connectors that allow easy quick connect solutions to the rigging process. Included in this kit is also the new 3 position water-proof high quality keyswitch (Matched keyswitch for dual engine applications). (897716K02)

2006 and newer Non DTS Outboards from 25 Hp to 250 HP- 14 Pin Connectors All MCM / MIE engines equiped with 14 pin connectors

84-896537K40

40 ft. harness (896537A40) with new 14 pin connector for the engine and additional connectors that allow easy quick connect solutions to the rigging process. Included in this kit is also the new 3 position water-proof high quality keyswitch. (897716)

2006 and newer Non DTS Outboards from 25 Hp to 250 HP- 14 Pin Connectors All MCM / MIE engines equiped with 14 pin connectors

IGNITION HARNESS - NON DTS 14 PIN

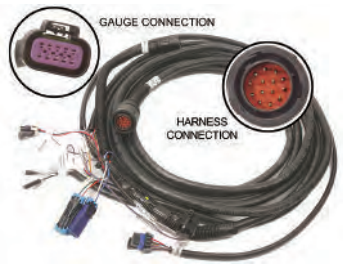

84-896537T02

2 ft. harness (896537A02) with new 14 pin connector for the engine and additional connectors that allow easy quick connect solutions to the rigging process. Loose harness.
Analog gauges also require the use of harness 84-892990T01, T10 or T15.

2006 and newer Non DTS Outboards from 25 Hp to 250 HP- 14 Pin Connectors All MCM / MIE engines equiped with 14 pin connectors

84-896537T08

8 ft. harness (896537A08) with new 14 pin connector for the engine and additional connectors that allow easy quick connect solutions to the rigging process. Loose harness.
Analog gauges also require the use of harness 84-892990T01, T10 or T15.

2006 and newer Non DTS Outboards from 25 Hp to 250 HP- 14 Pin Connectors All MCM / MIE engines equiped with 14 pin connectors

84-896537T11

11 ft. harness (896537A11) with new 14 pin connector for the engine and additional connectors that allow easy quick connect solutions to the rigging process. Loose harness.
Analog gauges also require the use of harness 84-892990T01, T10 or T15.

2006 and newer Non DTS Outboards from 25 Hp to 250 HP- 14 Pin Connectors All MCM / MIE engines equiped with 14 pin connectors

84-896537T15

15 ft. harness (896537A15) with new 14 pin connector for the engine and additional connectors that allow easy quick connect solutions to the rigging process. Loose harness.
Analog gauges also require the use of harness 84-892990T01, T10 or T15.

2006 and newer Non DTS Outboards from 25 Hp to 250 HP- 14 Pin Connectors All MCM / MIE engines equiped with 14 pin connectors

84-896537T20

20 ft. harness (896537A20) with new 14 pin connector for the engine and additional connectors that allow easy quick connect solutions to the rigging process. Loose harness.
Analog gauges also require the use of harness 84-892990T01, T10 or T15.

2006 and newer Non DTS Outboards from 25 Hp to 250 HP- 14 Pin Connectors All MCM / MIE engines equiped with 14 pin connectors

84-896537T24

25 ft. harness (896537A24) with new 14 pin connector for the engine and additional connectors that allow easy quick connect solutions to the rigging process. Loose harness.
Analog gauges also require the use of harness 84-892990T01, T10 or T15.

2006 and newer Non DTS Outboards from 25 Hp to 250 HP- 14 Pin Connectors All MCM / MIE engines equiped with 14 pin connectors

84-896537T29

30 ft. harness (896537A29) with new 14 pin connector for the engine and additional connectors that allow easy quick connect solutions to the rigging process. Loose harness.
Analog gauges also require the use of harness 84-892990T01, T10 or T15.

2006 and newer Non DTS Outboards from 25 Hp to 250 HP- 14 Pin Connectors All MCM / MIE engines equiped with 14 pin connectors

84-896537T40

40 ft. harness (896537A40) with new 14 pin connector for the engine and additional connectors that allow easy quick connect solutions to the rigging process. Loose harness.
Analog gauges also require the use of harness 84-892990T01, T10 or T15.

2006 and newer Non DTS Outboards from 25 Hp to 250 HP- 14 Pin Connectors All MCM / MIE engines equiped with 14 pin connectors

HARNESS - NON DTS 14 PIN- ANALOG GAUGE



84-892990T01

This harness will connect directly to the non DTS harness at the helm. It will allow you to connect to analog gauges on the dash and allows the choke function to work on the 8/9.9/15/20 FourStroke carbureted outboards with serial numbers beginning with "0R". 5 ft long Used with 84-896537__ harness

2006 and newer Non DTS Outboards from 25 Hp to 250 HP- 14 Pin Connectors All MCM / MIE engines equiped with 14 pin connectors

84-892990T10

This harness will connect directly to the non DTS harness at the helm. It will allow you to connect to analog gauges on the dash. 10 ft long Used with 84-896537__ harness

2006 and newer Non DTS Outboards from 25 Hp to 250 HP- 14 Pin Connectors All MCM / MIE engines equiped with 14 pin connectors

84-892990T15

This harness will connect directly to the non DTS harness at the helm. It will allow you to connect to analog gauges on the dash. 15 ft long Used with 84-896537__ harness

2006 and newer Non DTS Outboards from 25 Hp to 250 HP- 14 Pin Connectors All MCM / MIE engines equiped with 14 pin connectors

HARNESS EXTENSION- 10 PIN



84-8M0058668

This harness extension will allow you to increase the length by 6 feet of the 10 pin drop for instruments. The extension will work with Side Mount controls as well as any 896537 series main engine / boat harness.

TRANSOM MOUNTED IGNITION KEYSWITCH

A transom mounted keyswitch allowing for activation of the starter solenoid, a choke or enrichner valve.

TRANSOM MOUNTED IGNITION KEYSWITCH



15000A 7

Includes a push-to-choke function and a warning horn. Has a 6 ft. (182 cm) cable length. Has an 8 pin engine connector.

Fits many varying outboards and applications through Model Year 2005 where a keyswitch with warning horn and choke (enrichner) function is desired. Outboards require a remote control engine harness be used in conjunction with this switch in order for it to function. Warning horn feature is not present on all model outboards.

TRANSOM MOUNTED IGNITION KEYSWITCH



15000A14

Includes a push-to-choke function and a warning horn. Has a 6 ft. (182 cm) cable length. Has the 14 pin engine connector.

Fits many varying outboards and applications beginning in Model Year 2006 where a keyswitch with warning horn and choke (enrichner) function is desired. Outboards require a remote control engine harness be used in conjunction with this switch in order for it to function. Warning horn feature is not present on all model outboards.

TRANSOM MOUNTED IGNITION KEYSWITCH



47974A10

Has key start and choke functions but no warning horn circuit. Cable length is 5 ft. (152 cm).

Fits the 30/40 hp. 2 cycle outboards of Japanese origin that do not have oil injection.

TRANSOM MOUNTED IGNITION KEYSWITCH



87-8M0090402

Includes a key function and a warning horn. Has a 6 ft. (182 cm) cable length. Has a 14 pin engine connector.

Fits EFI outboards and applications after Model Year 2006 where a keyswitch with warning horn is desired. Outboards require a remote control engine harness be used in conjunction with this switch in order for it to function. Warning horn feature is not present on all model outboards. For EFI models only (14 pin connector engine) DOES NOT HAVE PUSH TO CHOKE

START / STOP SWITCHES

SINGLE ENGINE START/STOP SWITCH KIT



887767K01

Single engine start/stop kit which allows start and stop of engine with keyswitch in the RUN position.

Used on all DTS engines

DUAL ENGINE START/STOP SWITCH KIT



887767K02

Dual engine start/stop switch which allows engine to start/stop with the keyswitch in the run position.

Used on all DTS engines.

TRIPLE ENGINE START/STOP SWITCH KIT



887767K03

Triple engine switch allows engine to start/stop when key is in the run position.

Used on all DTS engines.

ENGINE START/STOP SWITCH KIT- QUAD STRBD



887767K04

Quad engine switch allows engine to start/stop when key is in the run position. Used for two Strbd engines. Must order 887767K05 for Port engines

Used on all DTS engines.

ENGINE START/STOP SWITCH KIT- QUAD PORT



887767K05

Quad engine switch allows engine to start/stop when key is in the run position. Used for two Port engines. Must order 887767K04 for Strbd engines

Used on all DTS engines.

START/STOP SWITCH PAD



87-879302A01

Single engine flush mount.

Used on all DTS engines.

START/STOP SWITCH PAD



87-879302A02

Dual engine flush mount.

Used on all DTS engines.

START/STOP SWITCH PAD



87-879302A03

Triple engine flush mount.

Used on all DTS engines.

START/STOP SWITCH PAD



87-879302A04

Quad application flush mount. (Startboard Center and Starboard)

Used on all DTS engines.

START/STOP SWITCH PAD



87-879302A05

Quad application flush mount. (Port and Port Center)
Used on all DTS engines.

BEZEL



879315T01

Black
Start/Stop switch kit, flush mount. For single, dual, triple and quad application.

BEZEL



879315T02

White
Start/Stop switch kit, flush mount. For single, dual, triple and quad application.

BEZEL



879315T03

Chrome
Start/Stop switch kit, flush mount. For single, dual, triple and quad application.

BEZEL



879315T04

Grey
Start/Stop switch kit, flush mount. For single, dual, triple and quad application.

START/STOP EXTENSION HARNESS



84-896380T05

5 ft. Allows you to extend the harness an extra 5 ft from the start/stop button
Used on all DTS engines.

KEY SWITCHES

KEY SWITCH -3 POSITION WITH DECAL/WASHER



87-897716K01

Three position keyswitch with shorter key and mounting length (Off, Run and Start)
Loose switch only. 3/4 in. cut out. Includes switch with decal and washer.
Can be used on DTS as well as Non DTS installations.

KEY SWITCH -3 POSITION WITH DECAL/WASHER



87-897716K02

Three position keyswitch with shorter key and mounting length (Off, Run and Start)
Loose switch only. 3/4 in. cut out. Includes switch with decal and washer.
Matched set for dual engine installs
Can be used on DTS as well as Non DTS installations. Matched keyswitches for dual installations

KEY SWITCH -4 POSITION



87-893353A02

Four position keyswitch (Off, Accessory, Run and Start) Loose switch only. 7/8 in. cut out

Can be used on DTS as well as non DTS installations

KEY SWITCH KIT - 4 POSITION W/MOUNTING HARDWARE



87-893353A03

Four position keyswitch (Off, Accessory, Run and Start) Includes keyswitch , key cover, bezel, 2 1/8 in. Dia. mounting housing and mounting hardware. 7/8 in. cut out

Can be used on DTS as well as non DTS installations

KEY SWITCH KIT - 4 POSITION MATCHED KEYS-DUALS



87-893353A04

Four position keyswitch- dual engines (Off, Accessory, Run and Start) Includes matched keyswitch , key cover, bezel, 2 1/8 in. Dia. mounting housing and mounting hardware. 7/8 in. cut out.

Dual engine - matched key set. Can be used on DTS as well as non DTS installations

KEY SWITCH KIT - 4 POSITION MATCHED KEYS-TRIPLES



87-893353A05

Four position keyswitch- triple engines (Off, Accessory, Run and Start) Includes matched keyswitch , key cover, bezel, 2 1/8 in. Dia. mounting housing and mounting hardware. 7/8 in. cut out.

Triple engine - matched key set

KEY SWITCH KIT - 4 POSITION MATCHED KEYS-QUADS



87-893353A06

Four position keyswitch-Quad engines (Off, Accessory, Run and Start) Includes matched keyswitch , key cover, bezel, 2 1/8 in. Dia. mounting housing and mounting hardware. 7/8 in. cut out.

Quad engine - matched key set

KEY SWITCH KIT - 4 POSITION MATCHED KEYS - QUINTS



87-8M0077850

Four position keyswitch-Quint engines (Off, Accessory, Run and Start) Includes matched keyswitch , key cover, bezel, 2 1/8 in. Dia. mounting housing and mounting hardware. 7/8 in. cut out.

Quint engine - matched key set

KEYSWITCH EXTENSION-NO CRANK WIRE



84-896691T05

This extension is used when the KeySwitch does not require starting . Only has off/on functions- 5 ft length

Used on all DTS engines.

84-896691T10

This extension is used when the KeySwitch does not require starting . Only has off/on functions- 10 ft length

Used on all DTS engines.

896691T15

This extension is used when the KeySwitch does not require starting . Only has off/on functions- 15 ft length

Used on all DTS engines.

IGNITION KEYS - NUMERIC

To order correct key, convert the number stamped on your key to a part number.

REPLACEMENT IGNITION KEY



30431104

Key stamped with "104"

Priced individually, sold @ multiples of 2

30431106

Key stamped with "106"

Priced individually, sold @ multiples of 2

30431108

Key stamped with "108"

Priced individually, sold @ multiples of 2

30431123

Key stamped with "123"

Priced individually, sold @ multiples of 2

30431124

Key stamped with "124"

Priced individually, sold @ multiples of 2

30431125

Key stamped with "125"

Priced individually, sold @ multiples of 2

30431126

Key stamped with "126"

Priced individually, sold @ multiples of 2

30431127

Key stamped with "127"

Priced individually, sold @ multiples of 2

30431128

Key stamped with "128"

Priced individually, sold @ multiples of 2

30431129

Key stamped with "129"

Priced individually, sold @ multiples of 2

30431130

Key stamped with "130"

Priced individually, sold @ multiples of 2

30431131

Key stamped with "131"

Priced individually, sold @ multiples of 2

30431132

Key stamped with "132"

Priced individually, sold @ multiples of 2

30431133

Key stamped with "133"

Priced individually, sold @ multiples of 2

30431134

Key stamped with "134"

Priced individually, sold @ multiples of 2

ALPHA/NUMERIC KEY CHART

Key Chart A - Alpha/Numeric Keys

Key Number	Part Number	Status
1A	89491 1	Active
1B	89491 2	Active
1C	89491 3	Active
1D	89491 4	Active
1E	89491 5	Active
1F	89491 6	Active
2A	89491 7	Active
2B	89491 8	Active
2C	89491 9	Active
2D	89491 10	Active
2E	89491 11	Active
2F	89491 12	Active

IGNITION KEYS - 4 POSITION - BASE NUMBER 893353 KEY SWITCH

To order correct key, convert the number stamped on your separate plate for part number.

REPLACEMENT IGNITION KEY



896919951

Replacement for new 4 position Key switch (893353A__ series) Number is on metal plate that comes with keys- #951

896919952
Replacement for new 4 position Key switch (893353A__ series) Number is on metal plate that comes with keys- #952

896919953
Replacement for new 4 position Key switch (893353A__ series) Number is on metal plate that comes with keys- #953

896919954
Replacement for new 4 position Key switch (893353A__ series) Number is on metal plate that comes with keys- #954

896919955
Replacement for new 4 position Key switch (893353A__ series) Number is on metal plate that comes with keys- #955

896919956
Replacement for new 4 position Key switch (893353A__ series) Number is on metal plate that comes with keys- #956

896919957
Replacement for new 4 position Key switch (893353A__ series) Number is on metal plate that comes with keys- #957

896919958
Replacement for new 4 position Key switch (893353A__ series) Number is on metal plate that comes with keys- #958

896919959
Replacement for new 4 position Key switch (893353A__ series) Number is on metal plate that comes with keys- #959

896919960
Replacement for new 4 position Key switch (893353A__ series) Number is on metal plate that comes with keys- #960

896919961
Replacement for new 4 position Key switch (893353A__ series) Number is on metal plate that comes with keys- #961

896919962
Replacement for new 4 position Key switch (893353A__ series) Number is on metal plate that comes with keys- #962

896919963
Replacement for new 4 position Key switch (893353A__ series) Number is on metal plate that comes with keys- #963

896919964
Replacement for new 4 position Key switch (893353A__ series) Number is on metal plate that comes with keys- #964

896919965
Replacement for new 4 position Key switch (893353A__ series) Number is on metal plate that comes with keys- #965

896919966
Replacement for new 4 position Key switch (893353A__ series) Number is on metal plate that comes with keys- #966

896919967
Replacement for new 4 position Key switch (893353A__ series) Number is on metal plate that comes with keys- #967

896919968
Replacement for new 4 position Key switch (893353A__ series) Number is on metal plate that comes with keys- #968

896919969
Replacement for new 4 position Key switch (893353A__ series) Number is on metal plate that comes with keys- #969

896919970
Replacement for new 4 position Key switch (893353A__ series) Number is on metal plate that comes with keys- #970

IGNITION KEYS - 3 POSITION - BASE NUMBER 897716 KEY SWITCH

To order correct key, convert the number stamped on your key to a part number.

REPLACEMENT IGNITION KEYS



87-897716451
Replacement keys for 3 position 87-897716 key switch. Number is on plate that comes with original keys

87-897716457
Replacement keys for 3 position 87-897716 key switch. Number is on plate that comes with original keys #457

87-897716460
Replacement keys for 3 position 87-897716 key switch. Number is on plate that comes with original keys #460

87-897716461
Replacement keys for 3 position 87-897716 key switch. Number is on plate that comes with original keys #461

87-897716462
Replacement keys for 3 position 87-897716 key switch. Number is on plate that comes with original keys #462

87-897716463
Replacement keys for 3 position 87-897716 key switch. Number is on plate that comes with original keys #463

87-897716821
Replacement keys for 3 position 87-897716 key switch. Number is on plate that comes with original keys #821

87-897716827
Replacement keys for 3 position 87-897716 key switch. Number is on plate that comes with original keys #827

87-897716830
Replacement keys for 3 position 87-897716 key switch. Number is on plate that comes with original keys #830

87-897716831
Replacement keys for 3 position 87-897716 key switch. Number is on plate that comes with original keys #831

87-897716832
Replacement keys for 3 position 87-897716 key switch. Number is on plate that comes with original keys #832

87-897716833
Replacement keys for 3 position 87-897716 key switch. Number is on plate that comes with original keys #833

87-897716841
Replacement keys for 3 position 87-897716 key switch. Number is on plate that comes with original keys #841

87-897716847
Replacement keys for 3 position 87-897716 key switch. Number is on plate that comes with original keys #847

87-897716850
Replacement keys for 3 position 87-897716 key switch. Number is on plate that comes with original keys #850

87-897716851
Replacement keys for 3 position 87-897716 key switch. Number is on plate that comes with original keys #851

87-897716852

Replacement keys for 3 position 87-897716 key switch. Number is on plate that comes with original keys #852

87-897716853

Replacement keys for 3 position 87-897716 key switch. Number is on plate that comes with original keys #853

NUMERIC KEY CHART

Key Chart B - Numeric Keys

Key Number	Part Number	Status
101	30431101	N.L.A.
102	30431102	N.L.A.
103	30431103	N.L.A.
104	30431104	Active
105	30431105	Active
106	30431106	Active
107	30431107	N.L.A.
108	30431108	Active
109	30431109	Active
110	30431110	N.L.A.
111	30431111	N.L.A.
112	30431112	N.L.A.
113	30431113	Active
114	30431114	N.L.A.
115	30431115	N.L.A.
116	30431116	Active
117	30431117	Active
118	30431118	Active
119	30431119	Active
120	30431120	Active
121	30431121	N.L.A.
122	30431122	Active
123	30431123	Active
124	30431124	Active
125	30431125	Active
126	30431126	Active
127	30431127	Active
128	30431128	Active
129	30431129	Active
130	30431130	Active
131	30431131	Active
132	30431132	Active
133	30431133	Active
134	30431134	Active

MARINER UNIQUE IGNITION KEYS

To order correct key, convert the number stamped on your key to a Quicksilver part number. Fits Mariner (Japanese Origin) dash mounted key panels

REPLACEMENT IGNITION KEY



13294451

Key stamped with "451"
Priced individually, sold @ multiples of 2

13294452

Key stamped with "452"
Priced individually, sold @ multiples of 2

13294457

Key stamped with "457"
Priced individually, sold @ multiples of 2

MARINER UNIQUE IGNITION KEY CHART

Key Chart C

Key Number	Part Number	Status
111	93092M	N.L.A.
112	93093M	N.L.A.
113	93094M	N.L.A.
121	93095M	Active
122	93096M	N.L.A.
123	93097M	Active
221	93078M	N.L.A.
222	93079M	N.L.A.
223	93080M	N.L.A.
224	93081M	N.L.A.
225	93082M	N.L.A.
226	93083M	N.L.A.
227	93084M	N.L.A.
228	93085M	N.L.A.
229	93086M	N.L.A.
230	93087M	N.L.A.
231	93088M	N.L.A.
232	93089M	N.L.A.
233	93090M	N.L.A.
234	93091M	N.L.A.
451	13294451	Active
452	13294452	Active
453	13294453	Active
454	13294454	N.L.A.
455	13294455	Active
456	13294456	Active
457	13294457	Active

Key Number	Part Number	Status
458	13294458	Active
459	13294459	Active
460	13294460	N.L.A.
461	13294461	Active
462	13294462	Active
463	13294463	Active
464	13294464	Active
465	13294465	Active
466	13294466	Active
467	13294467	N.L.A.
468	13294468	Active
469	13294469	N.L.A.
470	13294470	Active

FORCE UNIQUE IGNITION KEYS

To order correct key, convert the number stamped on your key to a Quicksilver part number. Fits Force Ignition switches 1992 and prior.

REPLACEMENT IGNITION KEY



817782 1
Key stamped with "A" or not stamped with anything.

817883 1
Key stamped with "B"

817891 1
Key stamped with "C"

817928 1
Key stamped with "D"

817929 1
Key stamped with "E"

819012
Key stamped with "51"

819013
Key stamped with "55"

819014
Key stamped with "65"

819015
Key stamped with "66"

819016
Key stamped with "67"

FORCE UNIQUE IGNITION KEY CHART

Key Chart D

Key Number	Part Number	Status
Not Stamped	817782 1	Active
A	817782 1	Active
B	817883 1	Active
C	817891 1	Active
D	817928 1	Active
E	817929 1	Active
51	819012	Active
55	819013	Active
65	819014	Active
66	819015	Active
67	819016	Active

IGNITION KEY COVER

BLACK PLASTIC KEY COVER



90468A 1
Fits most ignition switch keys

LANYARD STOP SWITCHES

Lanyard cord attaches to the toggle switch or cap and boat driver. When switch toggles or cap pulls off switch, the ignition is interrupted and the engine shuts down.

LANYARD STOP SWITCH



87- 19674A05
5 ft.(1.53 m) harness. Surface mount or flush mount. Used when mounting controls with no lanyard switch included
MCM/MIE engines. Do not use on DTS engines

LANYARD STOP SWITCH



87- 19674A06

5 ft.(1.53 m) harness. 2 inch cut out with Black bezel. Used when mounting controls with no lanyard switch included.
Chrome bezel optional - order separate.

MCM/MIE engines. Do not use on DTS engines

LANYARD STOP SWITCH



87- 19674A07

5 ft.(1.53 m) harness. Surface or Flush mount. Used when mounting controls with no lanyard switch included

Used on Outboards and DTS engines

LANYARD STOP SWITCH



87- 19674A08

5 ft.(1.53 m) harness. 2 inch cut out with Black bezel. Used when mounting controls with no lanyard switch included.
Chrome bezel optional - order separate.

Used on Outboards and DTS engines

LANYARD STOP SWITCH - DUAL FLUSH MOUNT



87-814324A 2

Dual engine kit. 5 ft.(1.53 m) harness. Surface mount or flush mount. Used when mounting controls with no lanyard switch included

Used on Non DTS MCM/MIE Engine - See 87-19674A12 and A13 for OB/DTS Installations

LANYARD STOP SWITCH

87-814324B 2

Dual engine kit. 5 ft.(1.53 m) harness. Surface mount or flush mount. (Bulk) Used when mounting controls with no lanyard switch included

Priced individually, sold @ multiples of 24

LANYARD STOP SWITCH -DUAL FLUSH MOUNT



87- 19674A12

5 ft.(1.53 m) harness. Surface or Flush mount. Used for Dual Engine installations

Used on Outboards and DTS engines

LANYARD STOP SWITCH -DUAL BEZEL 2 INCH



87- 19674A13

5 ft.(1.53 m) harness. 2 inch cut out with Black bezel. Used with dual engine installations.
Chrome bezel optional - order separate.

Used on Outboards and DTS engines

TRIPLE ENGINE LANYARD HARNESS KIT



84-895725A04

Multiple engine connections to lanyard switches- Use on triple engine installations

Used on Non DTS MCMMIE engines - See 87-19674A14 and A15 for OB and DTS installations

QUAD ENGINE LANYARD HARNESS KIT



84-895725A03

Multiple engine connections to lanyard switches. Use for Quad engine installations

Used on Non DTS MCM/MIE Engines - See 87-19674A14 and A15 for OB and DTS installations

LANYARD STOP SWITCH- TRIPLE/QUAD FLUSH MOUNT



87- 19674A14

5 ft.(1.53 m) harness. Surface or Flush mount. Used with triple/Quad engine installations. For quint engine applications also purchase 898289A72

Used on Outboards and DTS engines

LANYARD STOP SWITCH-TRIPLE/QUAD BEZEL 2 INCH



87- 19674A15

5 ft.(1.53 m) harness. 2 inch cut out with Black bezel. Used with triple/quad engine installations. For quint engine applications also purchase 898289A72. Chrome bezel optional - order separate.

Used on Outboards and DTS engines

LANYARD STOP SWITCH



87-823037A04

Fits Mercury/Mariner 2.5, 3.3, 4, 5 hp (U.S. S/N 0A809601 and above; Belgium S/N 9589154 and above) and 4/5/6 FourStroke.

LANYARD STOP SWITCH



87-856654A 2

3-1/2 in.(89 mm) wires, does not include cap. Normally closed switch

Fits Mercury/Mariner outboards.

LANYARD STOP SWITCH



87-856654A 4

20 ft.(6.2 m) harness. Includes 2 caps.

Fits Mercury/Mariner outboards and MCM/MIE engines.

LANYARD DIODE KIT



84-898289A72

This kit is dual engine adapter that is required when connecting one lanyard stop switch to two engines. Without this kit the engines would not be able to start or stop independently.

Fits Mercury / Mariner outboards.

LANYARD STOP SWITCH CAP



75095T 2

Replacement cap for (65503A__ and 856654A__ series) Lanyard Stop Switches.

Fits Mercury/Mariner outboards and MCM/MIE engines.

Priced individually, sold @ multiples of 2

Mercury Branded, Clamshell Package Point of Sale Packaged.

75095Q 2

Replacement cap for (65503A__ and 856654A__ series) Lanyard Stop Switches.
Fits Mercury/Mariner outboards and MCM/MIE engines.
Priced individually, sold @ multiples of 2
Quicksilver Branded, Clamshell Package Point of Sale Packaged.

LANYARD CORD - 54 INCH



8M0092849

Lanyard cord with new ergonomic plastic clip, 54 inches in length.
Can be utilized on any Mercury Marine/Quicksilver lanyard stop switch at the helm. Does not work with engine mounted stop switches.

Priced individually, sold @ multiples of 2
Mercury Branded, Clamshell Package Point of Sale Packaged.

LANYARD CORD - 54 INCH



8M0092850

Lanyard cord with new ergonomic plastic clip, 54 inches in length.
Can be utilized on any Mercury Marine/Quicksilver lanyard stop switch at the helm. Does not work with engine mounted stop switches.

Priced individually, sold @ multiples of 2
Quicksilver Branded, Clamshell Package Point of Sale Packaged.

LANYARD COUNTER DISPLAY KIT



8M0092854

Contains 12 Mercury Point-of-Sale packaged Lanyards for counter display.
Mercury Branded

LANYARD CORD - 70 INCH



8M0092851

Lanyard cord with improved ergonomic plastic clip, 70 inches in length.
Intended for use on Big Tiller applications.
Quicksilver Branded

LANYARD CORD



823054

Fork style lanyard used with the engine mounted stop switch on the 2.5, 3.3, 4/5 HP (2-cycle), 4/5/6 (FourStroke) outboard engines.

823054Q

Fork style lanyard used with the engine mounted stop switch on the 2.5, 3.3, 4/5 HP (2-cycle), 4/5/6 (FourStroke) outboard engines.
Priced individually, sold @ multiples of 2
Quicksilver Branded, Clamshell Package Point of Sale Packaged.

LANYARD SWITCHES

LANYARD STOP SWITCH



87- 19674A08

5 ft.(1.53 m) harness. 2 inch cut out with Black bezel. Used when mounting controls with no lanyard switch included.
Chrome bezel optional - order separate.
Used on Outboards and DTS engines

LANYARD STOP SWITCH -DUAL BEZEL 2 INCH



87- 19674A13

5 ft.(1.53 m) harness. 2 inch cut out with Black bezel. Used with dual engine installations.
Chrome bezel optional - order separate.

Used on Outboards and DTS engines

LANYARD STOP SWITCH -DUAL FLUSH MOUNT



87- 19674A12

5 ft.(1.53 m) harness. Surface or Flush mount. Used for Dual Engine installations

Used on Outboards and DTS engines

LANYARD STOP SWITCH-TRIPLE/QUAD BEZEL 2 INCH



87- 19674A15

5 ft.(1.53 m) harness. 2 inch cut out with Black bezel. Used with triple/quad engine installations. For quint engine applications also purchase 898289A72.
Chrome bezel optional - order separate.

Used on Outboards and DTS engines

LANYARD STOP SWITCH- TRIPLE/QUAD FLUSH MOUNT



87- 19674A14

5 ft.(1.53 m) harness. Surface or Flush mount. Used with triple/Quad engine installations. For quint engine applications also purchase 898289A72

Used on Outboards and DTS engines

SHADOW RESISTOR PACKS

RESISTOR PACK- DTS SHADOW MODE



898091T01

Resistor pack used with DTS Shadow Mode applications. (#93) Included with the harness for this versions Helm 1, Starboard 2

Triple engine / single helm applications 2006 models and newer

RESISTOR PACK #94 - QUAD DTS SHADOW MODE

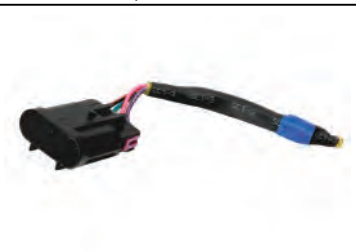

898091T02

Resistor pack #94 used on Quad DTS Shadow control single helm applications. Helm 1, Port 2

Quad engine / single helm applications 2006 models and newer

RESISTOR PACK- DTS SHADOW MODE



898091T03

Resistor pack used with DTS Shadow Mode applications. (#97) Helm 2, Starboard 2
Included in lower or primary helm for dual helm installs (895816A, 895817A, 895818A, and 895819A series helms)

Triple engine / dual helm applications 2006 models and newer.

RESISTOR PACK #98 ASSEMBLY - QUAD SHADOW MODE



898091T04

Resistor pack #98 used with Quad DTS Shadow control dual helm applications. (#98) Helm 2, Port 2

Quad engine / dual helm applications 2006 models and newer.

JUNCTION BOXES/JUNCTION BOX ACCESSORIES

SMARTCRAFT JUNCTION BOX



878492K14

4-Way SmartCraft Junction Box with (2) weather caps.

Provides connection/distribution point for multiple components on CAN Bus system.

878492T14

4-Way SmartCraft Junction Box without weather caps.

Provides connection/distribution point for multiple components on CAN Bus system.

878492B14

4-Way SmartCraft Junction Box without weather caps.

Provides connection/distribution point for multiple components on CAN Bus system.

Priced individually, sold @ multiples of 24

SMARTCRAFT JUNCTION BOX



878492K16

6-Way SmartCraft Junction Box with (3) weather caps.

Provides connection/distribution point for multiple components on CAN Bus system. Order 1 for single and 2 for twin engine installs.

878492T16

6-Way SmartCraft Junction Box without weather caps.

Provides connection/distribution point for multiple components on CAN Bus system.

878492B16

6-Way SmartCraft Junction Box without weather caps.

Provides connection/distribution point for multiple components on CAN Bus system.

Priced individually, sold @ multiples of 24

SMARTCRAFT JUNCTION BOX



878492K18

8-Way SmartCraft Junction Box with (4) weather caps.

Provides connection/distribution point for multiple components on CAN Bus system.

878492T18

8-Way SmartCraft Junction Box without weather caps.

Provides connection/distribution point for multiple components on CAN Bus system.

SMARTCRAFT WEATHER CAP



859318T 2

Weather Cap for SmartCraft Junction Box

Provides weather protection at unused junction box connection points

859318B 2

Weather Cap for SmartCraft Junction Box

Provides weather protection at unused junction box connection points

Priced individually, sold @ multiples of 24

10 PIN WEATHER CAP



888507T

10 pin weather cap with mounting tab.

Used for harnessing that could plug into a Junction Box.

SMARTCRAFT J-BOX TERMINATOR/RESISTOR



859318T 1

SmartCraft Yellow 10-pin Terminator/Resistor

Provides CAN Bus termination for CAN P network.

859318B 1

SmartCraft Junction Box Terminator/Resistor

Provides CAN Bus termination where installed

Priced individually, sold @ multiples of 24

TERMINATOR ASSEMBLY



8M0055652

SmartCraft Terminator Can 1/P & H

RESISTOR- TERMINATION- 2 PIN



893388A01

Blue 2-pin terminator/resistor

Provides CAN bus termination for CAN Networks.

HELM MPR 2 PIN WEATHER CAP



86-8M0054244

GT280 2 pin male weather cap.

Used on Joystick (Zeus, Axius and JPO) applications for the Helm MPR connection harness 8M2021476.

PLUG ASY DIAGNOSTIC PORT



8M0046339

10 pin diagnostic port for use on any SmartCraft application.

Used as a 10 pin diagnostic port for connecting Mercury Computer Diagnostic System (CDS) junction box connection. Typically gets mounted at the helm, out of line of site so that a technician does not have to disassemble helm to plug into a 10 pin connection. Requires a harness from back of diagnostic port to a 10 pin SmartCraft connection in the rigging.

SECURITY SYSTEMS

This section will include security devices that will help protect your engine against theft..

MERCURY THEFT DETERRENT SYSTEM (TDS) STAGE 1



8M0057383

Mercurys TDS improves boat and engine security and provides owner ease of mind. The system immobolizes the engine until the Fob is inserted. (Limit to approximately 2000 RPM) Once the Fob is inserted into the docking station; the user will experience normal engine performance. Red or green lights on the docking station indicates lock or unlock condition.

Can be used on all 40-60 4 stroke engines (serial # break is 1C173334) and the new 150 4 Stroke engine.
Can also be used on Verado and all MCM DTS (2007 and newer -Serial # 1B381712))as well as Racing DTS (Need Version 77 Micro Chi)

MERCURY TDS- PREMIUM



98-8M0065146

Kit that allows tracking of a boat using a satellite communication system. This system notifies the owner via email or text if the boat has left its location or exceeded the user definiable Geo Fence (which can be set to notify if it leaves a known good area or notify it it enters a known bad area). It also allows you to use a unique website that you can track the boat. Included in the kit is the immobilizer that limits power if the fob is not engaged. (includes both the 8M0057383 Immobilizer kit and the 8M059374 Premium Satelite Tracking Kit). System is CE certified and can be installed in Europe.

Can be used on all 40-60 4 stroke engines (serial # break is 1C173334) and the new 150 4 Stroke engine. Can also be used on Verado and all MCM DTS 2007 (serial number 1B381712 and above) and newer as well as Racing DTS . (Need Version 0077 Micro Chi)

CONTROL MODULE THEFT - MERCURY TDS



8M0056987

Control Module that communicates information as part of the Mercury TDS (Theft Deterrent System) Service replacement part

Used in kit 8M0057383 See Kit for applications

FOB -MERCURY TDS (THEFT DETERRENT SYSTEM)



8M0056988

Fob replacement kit to activateTheft Deterrent System as part of the Mercury TDS (Theft Deterrent System) Service replacement part

Used in kit 8M0057383 See Kit for applications

DOCKING STATION - THEFT - MERCURY TDS



8M0056994

Docking station that communicates information as part of the Mercury TDS (Theft Deterrent System) Service replacement part

Used in kit 8M0057383 See Kit for applications

WIRING HARNESS - THEFT - MERCURY TDS



84-8M0056993

Service replacement part.
Main harness that connects docking station and module as part of the Mercury TDS (Theft Deterrent System)

Used in kit 8M0057383 See Kit for applications

DECAL THEFT - MERCURY TDS



37-8M0035724

Mercury TDS (Theft Deterrent System) Anti theft Decal - 2 each

Used with Mercury TDS kits

BEZEL



8M6002359

Chrome - 52 mm

Fits small 2-1/8 in.(52 mm) O.D. SC100 System Link gauges

Priced individually, sold @ multiples of 2

MODULE AND SOFTWARE



8M0059432

Module with software used in the Mercury TDS - Premium security system.
Mercury TDS - Premium Kits

IRIDIUM SATELLITE ANTENNA



8M0059430

Iridium Satellite antenna used in the Mercury TDS - Premium security system.
Mercury TDS - Premium Kits

ADHESIVE PAD, SQUARE

8M0059439

Adhesive square (Iridium) used in the Mercury TDS - Premium security system.
Mercury TDS - Premium Kits

GPS ANTENNA



8M0059429

GPS antenna used in the Mercury TDS - Premium security system.
Mercury TDS - Premium Kits

ADHESIVE PAD , OVAL

8M0059438

Adhesive oval pad (GPS) used in the Mercury TDS - Premium security system.
Mercury TDS - Premium Kits

POWER HARNESS



8M0059434

Power cord used in the Mercury TDS - Premium security system.
Mercury TDS - Premium Kits

J-BOX EXTENSION



8M0059435

J-Box extension used in the Mercury TDS - Premium security system.
Mercury TDS - Premium Kits

OUTBOARD MOTOR LOCK - BASIC



67-8M0054123

Outboard Motor Lock for added security and protection for your Outboard.
Features heavy carbon steel desing, recessed solid brass lock and noise dampening to reduce rattle.
Good security protection at a good value.
Outboards that use turnbuckle (thumb screw) mounting bolts

OUTBOARD MOTOR LOCK - HIGH SECURITY



67-8M0054122

High Strength Outboard Motor Lock for added security that fits most turnbuckle design bolts. This kit features anti drill protection from the hardened case, polished 316 stainless steel , noise dampening to reduce rattle and 2 security keys that can not be duplicated.
Outboards that use the turnbuckle (thumb screw) mounting bolts.

OUTBOARD MOTOR LOCK - TRANSOM



67-8M0054121

High Strength Outboard Motor Lock for added security and protection for your Outboard. Features 2 security keys that can not be duplicated, Anti-Drill hardened material to make it harder to saw or drill thru and will fuit up to 1/2 inch (12 MM) engine bolts

Outboards that use transom mounted bolts

TACHOMETER HARNESSES

TACHOMETER HARNESS



84- 46239A 1

Three blade style. Used with 61490A__ series controls and ignition/Choke panels 77777A 2 and A 4.

TACHOMETER HARNESS



84- 69108A 5

Four pin style. Used with 84-87364A__ series harnesses, 65640A__ series controls and 76334A__ series controls.

TACHOMETER HARNESS



84- 86396A 8

Five pin style. 4 ft.(1.2 m). Used with Commander, Commander 2000 series & MSC 4000 (8 pin) series side mount controls and Ignition/Choke assemblies.

84- 86396A24

Five pin style. 13 ft.(4 m). Used with Commander, Commander 2000 series & MSC 4000 series side mount controls and Ignition/Choke assemblies.

TACHOMETER HARNESS



84-827593A 2

Bullet pin style.

Fits Mercury/Mariner 30 to 90 electric start tiller handle models.

REMOTE CONTROL ADAPTER HARNESSES

REMOTE CONTROL ADAPTER HARNESS



84-892473A01

Converts the traditional Mercury connector to an Amp 8-pin connector. Converts side mount controls 881170A 3, 15, 16 and the 816626A_ series ignition keyswitch harness to connect to the MY2005 and newer 8/9.9 hp. FourStroke outboard.

MY2005 and newer 8/9.9 hp. FourStroke outboard and the 15/20 hp. FourStroke (351cc) outboard when a 8 pin side mount control or keyswitch harness is used.

REMOTE CONTROL/IGNITION CHOKE EXTENSION HARNESSES

Fits Mercury / Mariner 6 hp. and Higher (2 cycle, USA & BEL Origin) outboards, Mariner 30/40 hp. with oil injection (2 cycle, Japanese Origin), all Mercury / Mariner 4-Stroke (USA Origin) outboards and Force 40 hp. and Higher (1993 and Newer). Various applications include 7,8 and 10 pin harnesses and 12 wire (8 pin plus 4 bullet connectors) used on side mount controls and ignition/choke assemblies.

EXTENSION HARNESS



84- 17829A 2

2 ft.(0.6 m) harness, 8 lead harness.

Used as harness extension or to complete two station installations.

84- 17829A10

10 ft.(3.05 m) harness, 8 lead harness.

Used as harness extension or to complete two station installations.

84- 17829A20

20 ft.(6.1 m) harness, 8 lead harness.
Used as harness extension or to complete two station installations.

OPTIONAL REMOTE CONTROL HARNESSES

REMOTE CONTROL HARNESS



84-819200T 1

15-1/2 ft.(4.7 m) ten-wire cable for large boats when standard remote control cable is too short.

Fits Force (1992 and prior) outboards with 10-wire engine harnesses.

TWO STATION Y-HARNESSES

For boats with two station applications.

POWER TRIM "Y" HARNESS



58366T 2

Used with Trim Control Panels and Extension Harnesses (46838__ series.

Fits MCM engines and Mercury/Mariner outboards with power trim.

TWO STATION "Y" HARNESS



84- 91942A 4

Used with Instrument Harness (84-812475A3 or 84-812476A 3), Instrument Extension Harness (84-812441A__ series or 84-812835A__ series), Stop/Start Panel (76426A 9) and Ignition Switch (54212A 7). Includes two station sending units.

Fits 1986 and newer MCM/MIE gasoline engines and 1994 and newer MCM/MIE diesel engines (except D-Tronic D2.8L,D4.2L and D7.3L diesels).

TWO STATION "Y" HARNESS



84- 93347A 3

38 in.(96 cm) harness. Used with Ignition/Choke Assembly (84-816626A 2), Start/Stop Panel (76426A 7) and Remote Control Extension Harness (84-17829A__ series).

Fits Mercury/Mariner outboards with 8 pin engine harnesses.

TWO STATION "Y" HARNESS



84-850782

Fits 1997-2000 D2.8L and D4.2L Electronic models

TWO STATION "Y" HARNESS



84-860617

21 pin Deutsch connector.

Fits all diesel models.

DUAL STATION SENDERS

Replaces factory installed sender on engine. For use with dual station instrumentation.

ENGINE OIL PRESSURE SENDER



37293T

Fits MCM/MIE gasoline engines

ENGINE WATER TEMPERATURE SENDER



49734

For dual station installations, used for temperature gauge

Fits MCM/MIE engines

ENGINE OIL PRESSURE SENDER



87-805268

For dual station installations

Fits 1994 and newer MCM/MIE Diesel engines

TWO STATION START/STOP PANELS

Mounts in a 3-3/8 in.(86 mm) hole.

TWO STATION START/STOP PANEL



76426A 9

3 ft.(910 mm) harness connects in place of ignition switch.

Fits MCM/MIE gasoline Carb engines (0W650000 and below).

8M0078892

3 ft.(910 mm) harness connects in place of ignition switch.

Used on Outboard installations that have Mechanical Non DTS requirements for Remote Start/Stop. Uses 6 Pin connection and services second station installations. Similar to 76426A 9 MCM version.

POWER TRIM CONTROL PANELS

POWER TRIM CONTROL PANEL



55642A13

3 button style with 20 ft.(6.1 m) harness.

Fits all Mercury/Mariner and MCM models with power trim.

POWER TRIM CONTROL PANEL



78408A 5

Toggle switch style with 20 ft.(6.1 m) harness. Mounts in a 3-3/8 in.(86 mm) hole. One panel required for each sterndrive.

Fits all Mercury/Mariner and MCM models with remote mounted power trim pump.

DUAL ENGINE POWER TRIM CONTROL



90362A 3

Toggle switch style with 20 ft.(6.1 m) harness and circuit control box. Mounts in a 3-3/8 in.(86 mm) hole. Designed for dual engine installations equipped with externally mounted tie bars. Simultaneously tilts both drives with a single toggle switch.

Fits Alpha & Bravo sterndrives that are not equipped with Auto Trim.

TRIM SWITCHES

TRIM SWITCH ASSEMBLY

Image not Available.

87-18286A46

3 wire trim switch assembly with "Up" "Down" rocker switch

Three bullet connector trim switch

4 POSITION TRIM SWITCH FOR DTS- TRIPLE ENGINES



87-897635K01

Dash Mounted Trim Switch for triples

2006 DTS engines and newer

QUAD TRIM PANEL-DASH MOUNT



87-899180K01

Dash mounted trim switch that allows the operator to trim each engine separately or all at the same time.

Gen I (2007 and newer) DTS Quad engines

FLUSH MOUNT TRIM PAD DUAL



87-879303A02

Flush mounted dash mounted trim switch that allows the operator to trim each engine seperately or all at the same time.

Gen1 (2007 and newer) DTS Dual engines

TRIM PAD



87-879303A03

Flush mounted dash mounted trim switch that allows the operator to trim each engine seperately or all at the same time.

Gen I (2007 and newer) DTS triple engines

TRIM PAD



87-879303A04

Flush mounted dash mounted trim switch that allows the operator to trim each engine seperately or all at the same time.

Gen I (2007 and newer) DTS Quad engines

BEZEL



879315T08

White

Trim switch, triple/quad.

BEZEL



879315T09

Chrome

Trim switch, triple/quad.

BEZEL



879315T05

Grey

Trim switch, triple/quad.

BEZEL



879315T07

Black

Trim switch, triple/quad.

AUXILIARY TRIM HARNESS



84-895388T02

Allows connection of trim wires for use of a helm trim lever or secondary trim devise.

2004 and newer DTS engines with panel mount remote control

BOW TRIM HARNESS

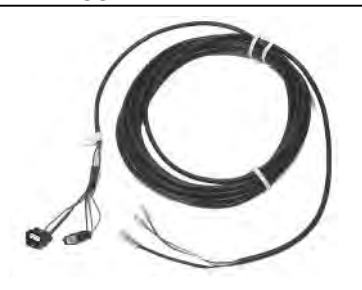

84-895093T03

Allows connection of trim wires for use of a bow mounted trim button. Harness runs from bow trim switch to engine cowl trim switch.

2004 and newer DTS engines

HARNESS-AUXILIARY DASH SWITCH- DUALS



84-866704T01

This harness allows the connection to a auxiliary trim switch.
Mounts between the 8 pin trim connector and the command module harness

DTS engines

TRIM ALL ADAPTER HARNESS



84-8M0094269

Harness allows for use of "trim all" switch on dual console ERCs when retrofitting with previous generation helm harnessing

Should only be used in a repower situation where "trim all" handle switch in dual ERC does not match up with existing DTS helm harnessing

4 POSITION TRIM SWITCH ADAPTER



84-896394T01

Used with all dash mounted triple and quad trim switches to adapt to Zero Effort Controls
Triple/Quad engines

2006 / 2007 (Gen II) DTS engines

TRIPLE ENGINE TRIM HARNESS KIT-DTS



84-895744A02

Allows connection of multiple DTS engines to trim switches (triple engine with Zero Effort Controls-included in kit)

QUAD ENGINE TRIM HARNESS KIT-DTS



84-895744A04

Allows connection of multiple DTS engines to trim switches (Quad engines with Zero Effort Controls-included in kit)

QUINT ENGINE TRIM HARNESS KIT-DTS



84-8M0072808

Allows connection of multiple DTS engines to trim switches (Quint engines with Zero Effort Controls-included in kit))

2005 Verado, 200/225 OptiMax DTS and DTS 8.1L / 496 Mag MCM/MIE engines

TRIM LIMIT KITS

Trim limit kits available to adjust trim up limits

TRIM LIMIT SWITCH KIT



899625K02

Limits the up travel of the power trim to minimize potential interferences when fully tilted. This is an analog device.

Fits the Mercury/Mariner Opti Max 1.5L (75-115), 2.5L (135,150,175 and 3.0L (200-300) Can also be used in 75-115 4 stroke engines (Serial number 1B366823-2B094955.)

TRIM LIMIT SWITCH KIT



899625K04

Limits the up travel of the power trim to minimize potential interferences when fully tilted. This is a digital device.

Fits the Mercury/Mariner Opti Max 1.5L (75-115), 2.5L (135,150,1750 and 3.0L (200-250) Can also be used in 75-115 4 stroke engines (Serial number 1B366823 and above. (ref 14 Pin Harness)

TRIM LIMIT SWITCH KIT



899625K05

Limits the up travel of the power trim to minimize potential interferences when fully tilted. This is an digital device.

Fits the Mercury Verado 4 cylinder (135-175)

TRIM LIMIT SWITCH KIT



899625K06

Limits the up travel of the power trim to minimize potential interferences when fully tilted. This is an digital device.

Fits the Mercury Verado 6 cylinder (200-275)

TRIM LIMIT SWITCH KIT



899625K07

Limits the up travel of the power trim to minimize potential interferences when fully tilted.

Fits the Mercury/Mariner 90 HP 2 cycle outboard

899625K08

Limits the up travel of the power trim to minimize potential interferences when fully tilted.

Fits the Mercury/Mariner 40-60 4 Stroke outboard

TRIM CONVERTER AND TILT UP LIMIT KIT



8M0087542

This kit allows the conversion of the trim signal from the analog sender to a digital output for Smartcraft gauge applications. The kit also has an additional feature that allows the max tilt up positon to be set to avoid interference when tilting the engine completely up.

2.1L F75-115 Four Stroke

TRIM LIMIT SWITCH KIT



8M0059532

Limits the up travel of the power trim to minimize potential interferences when fully tilted. This is an digital device.

Fits the 150 HP 4 Stroke only

TRANSOM MOUNTED POWER TILT PANEL

TRANSOM MOUNTED POWER TILT PANEL



87-815200A 1

Rocker switch style with 6 ft.(1.8 m) harness and bullet connectors. Provides tilt control from the outside of the boat when trailering and launching. "T" harness (included in kit) connects directly to trim pump with traditional 3 blade connector.

Fits MCM models with power trim having the traditional 3 blade connector.

TRANSOM MOUNTED POWER TILT PANEL



87-815200A02

Rocker switch style with 6 ft.(1.8 m) harness and bullet connectors. Provides tilt control from the outside of the boat when trailering and launching. "T" harness (included in kit) connects directly to trim pump with 3 pin Packard connector.

Fits MCM models with newer power trim having the 3 pin Packard connector.

OUTBOARD POWER TRIM SWITCH KITS

POWER TRIM SWITCH KIT



87- 14645A 4

Toggle switch style. Tiller handle mounted.

Fits Mercury/Mariner 40 JET and 50/60 hp. outboards and operates the power trim kit added to a base ELHO model engine. See Tiller application chart for specific engine models.

POWER TRIM CONTROL PANEL



15301A 1

Toggle switch style with 3 ft.(915 mm) harness with bullet connectors.

Fits Mariner 40 (Japanese origin) with 10 pin electrical harness (84-14738M)

POWER TRIM SWITCH KIT



87- 18286A17

Rocker switch style with 10 ft.(3.05 m) harness and 3 blade connector. Installation requires power trim "Y" harness (58366A 2). Provides tilt control from the bow or transom location.

Fits Mercury/Mariner models equipped with remote mounted trim pump.

POWER TRIM SWITCH KIT



87- 18286A18

Rocker style switch with 10 ft. harness and bullet connectors. Can be surface mounted or flush mounted. Provides tilt control from the bow or transom location.

Fits Mercury/Mariner models equipped with integral trim pump.

POWER TRIM SWITCH KIT



87- 18286A46

Rocker switch style with 25 ft.(7.62 m) harness and bullet connectors. Can be surface mounted or flush mounted. Provides tilt control from the bow or transom location.

Fits Mercury/Mariner 75-115 hp. FourStroke outboards beginning with serial number 1B366823-2B094955.

POWER TRIM SWITCH KIT



87- 18286A19

Rocker switch style with 25 ft.(7.62 m) harness and bullet connectors. Can be surface mounted or flush mounted. Provides tilt control from the bow or transom location.

Fits Mercury/Mariner models equipped with integral trim pump.

POWER TRIM SWITCH KIT



87- 18286A47

Rocker switch style with 10 ft.(3.0 m) harness and bullet connectors. Can be surface mounted or flush mounted. Provides tilt control from the bow or transom location.

Fits Mercury/Mariner 75-115 hp. FourStroke outboards beginning with serial number 1B366823-2B094955.

TRIM LIMIT SWITCH KIT



87-814407A 3

Kit includes a mercury switch to limit power trim travel and a new, shorter tilt bracket.

Fits all Mercury/Mariner V-6 outboard applications which use engine mounted power trim solenoids.

TRIM SWITCH Y-HARNESS



84-889295T

Allows for tee-in of bow power trim switch with remote controls.

Fits the F75-90-115 hp. FourStroke outboard, 1B366823 and above.

TROLL CONTROL

TROLL CONTROL- DASH MOUNTED- J BOX SMARTCRAFT INSTALLATIONS



87-8M0083438

Troll Control will allow you to have the same functions that you get from the SmartCraft Digital gauges and adjust the speed of the boat. By pushing the button up or down, you can feather your speed every 10 RPM. Go from idle to 1000 RPM or anywhere in between. (some engine can actually go lower than idle (75-115 4 stroke(Walleye), 135-200 HP Verado 4 cylinder and 3.0L Optimax) This kit will be used in Smartcraft gauge installations that have a J Box installed. . RPM will reset to idle when more than 2-3% movement occurs at the throttle (TPS)

Can be used with any Analog Gauge installation without a J Box. "Y" harness is included in kit to connect to main engine hanress. This kit can be used with any SmartCraft compatable Mercury Engine.

TROLL CONTROL- DASH MOUNTED- ANALOG

87-8M0083439

Troll Control will allow you to have the same functions that you get from the SmartCraft Digital gauges and adjust the speed of the boat. By pushing the button up or down, you can feather your speed every 10 RPM. Go from idle to 1000 RPM or anywhere in between. (some engine can actually go lower than idle (75-115 4 stroke(Walleye), 135-200 HP Verado 4 cylinder and 3.0L Optimax) This kit will be used in analog gauge installations. RPM will reset to idle when more than 2-3% movement occurs at the throttle (TPS)

Can be used with any Analog Gauge installation without a J Box. "Y" harness is included in kit to connect to main engine hanress. This kit can be used with any SmartCraft compatable Mercury Engine.

TROLL CONTROL Y HARNESS



84-8M0042976

Y hareness allows you to connect direct to main engine harness and the Troll Control kit without using a "J" box.

Used with Troll Control Kit 879365K08 (879365A08)

TROLL CONTROL KIT



87-8M0083437

RPM adjustment at your finger tips. This kit can be added to the Big Tiller Mechanical without P/S as an option

POWER TRIM EXTENSION HARNESSES

Plugs into remote control or trim panel with 3 blade connectors.

POWER TRIM EXTENSION HARNESS



46838A 4

10 ft.(3.05 m) harness and 3 blade connectors.

Fits Mercury/Mariner and MCM models with power trim.

46838A 6

20 ft.(6.1 m) harness and 3 blade connectors. Note: Use with dual solenoid trim pump only.

Fits Mercury/Mariner and MCM models with power trim.

POWER TRIM EXTENSION HARNESS



84-817659T01

16 ft.(4.88 m) harness.
This harness connects the remote control 4 pin Molex connector to the traditional 3 blade Mercury pump trim pump connector.

MCM/MIE

84-881125A 1

24 ft.(4.88 m) harness.
This harness connects the remote control 4 pin Molex connector to the traditional 3 blade Mercury pump trim pump connector.

MCM/MIE

POWER TRIM EXTENSION HARNESS



84-865772T01

16 ft.(4.88 m) harness.
This harness connects the remote control 4 pin Molex connector to the newer design 3 pin Packard pump trim pump connector.

MCM/MIE

POWER TRIM EXTENSION HARNESS



84-865772T02

24 ft.(4.88 m) harness.
This harness connects the remote control 4 pin Molex connector to the newer design 3 pin Packard pump trim pump connector.
MCM/MIE

POWER TRIM EXTENSION HOSE/HARNESS KIT

POWER TRIM EXTENSION HOSE/HARNESS KIT



32-865384A01

Includes a 6 ft (1.8M) harness and 4 ft (1.2M) hoses
Fits 1983 and newer MCM models

POWER TRIM ADAPTOR HARNESSES

POWER TRIM ADAPTOR HARNESS



84-865770A02

12 in.(305 mm) harness.
To convert older P/T pump with 3 blade connector to newer remote control harness with 3 pin Packard connector.

POWER TRIM ADAPTOR HARNESS



84-865771A02

12 in.(305 mm) harness.
To convert newer P/T pump with 3 pin Packard connector to older remote control harness with 3 blade connector.

POWER TRIM POWER SUPPLY CABLE

Recommend by the ABYC for use with MerCruiser power trim pumps installed in boats with batteries (or battery banks) rated more than 800 CCA or with a battery switch.

POWER TRIM CABLE ASSEMBLY



84-889282A01

102 cm (48 in.), Sheathed w/o fuse

POWER TRIM CABLE ASSEMBLY



84-889282A02

183 cm (72 in.), Fused and sheathed

BATTERY CABLES

BATTERY CABLE KIT



84- 88439A50

Pair of 12 ft.(3.7 m) cables, 1 red (+) Positive and 1 black (-) Negative, 4 gauge with ring terminals. This is an optional accessory kit and may not reflect the original cables on your engine. For original manufactured service part replacement, the Electronic Parts Catalog should always be used for each specific engine. For alternate length cables, consult the approriate service manual.

Fits Mercury/Mariner 75-V6 outboards and the new Verado.

BATTERY BAR - MULTIPLE CONNECTOR

BATTERY MULTIPLE CONDUCTOR KIT (WITH COVERS)



898289Q45

New Battery Bus Bar Kit allows multiple connection points that result in clean and direct connections for various electrical power needs. This will eliminate stacking of ring terminals and reduce corrosion and loose connections resulting in poor or faulty electrical connections.
Kit includes a 3/8 inch and a 5/16 inch mounting plate made of brass with all the fasteners needed for multiple connections. This kit also includes a positive (red) and negative (black) cover that snaps to the plate and provides protection to the battery connections. (ABYC compliant)

Any 12 volt battery that has a 3/8 inch and 5/16 inch pmounting stud

BATTERY MULTIPLE CONDUCTOR KIT (NO COVERS)



898289T47

New Battery Bus Bar Kit allows multiple connection points that result in clean and direct connections for various electrical power needs. This will eliminate stacking of ring terminals and reduce corrosion and loose connections resulting in poor or faulty electrical connections.
Kit includes a 3/8 inch and a 5/16 inch mounting plate made of brass with all the fasteners needed for multiple connections. This kit does not include plastic snap on covers (ABYC compliant)

Any 12 Volt battery with 3/8 inch and 5/16 inch studs

BATTERY COVER - RED/POSITIVE



898289045

Positive(Red) Snap on cover used with Battery Bus Bar kits
Any 12 volt battery that uses the new Bus Bar Kit

BATTERY COVER - BLACK/NEGATIVE



898289046

Negative (Black) Snap on cover used with Battery Bus Bar kits
Any 12 volt battery that uses the new Bus Bar Kit

BATTERY PLATE - 3/8 INCH (WITH FASTENERS)



898289A71

Multiple Conductor Battery Plate 3/8 inch (with fasteners) Clean up your battery solutions with direct isolated connections

BATTERY PLATE - 5/16 INCH (WITH FASTENERS)

898289A48

Multiple Conductor Battery Plate with fasteners (No Covers)
Clean up your battery solutions with direct isolated connections

BATTERY ISOLATORS

Multi-battery drain occurs when there are two or more batteries in a charging system. Without a battery isolator, accessories attached to one battery will draw power from all other batteries in the circuit, leaving them seriously rundown, or even dead. The Quicksilver Battery Isolator is an electric current controlling device which isolates each battery in the circuit. Each battery then discharges and charges accordingly. Never does the load on one battery drain power from other batteries in the system.

BATTERY ISOLATOR



8M6001342

70 amp rated, for 1 permanent magnet generator (requiring regulator sensing) and 3 batteries.

Fits 2 cycle & 4-Stroke Mercury/Mariner outboards (except OptiMax) with 16, dual 20 or 40 amp stator (permanent magnet generator) and a voltage regulator.

BATTERY ISOLATOR



8M6001343

95 amp rated, for 1 alternator (requiring regulator sensing) and 2 batteries. Wire kit 84-8M0045743 is required to complete installation on the F75-115 FourStroke outboard 1B366823-2B094995 besides our standard Battery Isolator Harness Kit.

Fits MCM/MIE engines; and also fits Mercury/Mariner outboard engines that are equipped with a belt driven Delco or Nippondenso alternator system.

BATTERY ISOLATOR



8M0085595

120 amp rated for use with 2 batteries Check for proper battery cable applications per ABYC/CFR regulations

Fits MCM/MIE engines; and also fits Mercury/Mariner outboard engines Recommended for Verado engine applications

BATTERY ISOLATOR HARNESS KIT



84-8M0094239

Allows the connection of any battery isolator to Mercury/Mariner outboard. Kit includes a 10 gauge red cable (8 ft.[2.44 m] length) that connects from the regulator output terminal to the battery isolator input terminal.

Fits Mercury/Mariner 50-125 hp. (2000 & prior) with high output (16 amp.) alternator and V-6 models (1999 & prior) equipped with 40 amp. alternator or dual 20-amp alternator systems and fits the F75-115 hp. (2.1L) FourStroke and the F150 EFI FourStroke outboard. Connections from battery isolator to the batteries are not included.

BATTERY ISOLATOR STARTER CABLE



84-8M0045743

Required in addition to the standard Battery Isolator Harness Kit.

Only required with the F75-115 FourStroke outboard 1B366823-2B094995.

CABLE/FUSE ASY - 90 AMP -BATTERY ISOLATOR



84-898180K01

Improved heat handling capacity cable used with battery isolators and Verado kits

VERADO KICKER ELECTRICAL KIT



897478K01

Battery isolated system that allows you to run your kicker engine and use the Power Steering system without you primary engine running. This system allows you to connect to a deep cell battery (not your starter battery) and the system will provide normal power steering from the wheel. The system will alert you when your auxiliary battery is below 9.5 volts. This signal means that you must start your primary engine to change the battery system. This kit will save the starting battery for primary starting use only. Gen 4 Verado and older application only.

Verado Power Steering systems with a kicker engine 200-300 Verado 2005 and newer

VERADO KICKER ELECTRICAL KIT



897478K02

Battery isolated system that allows you to run your kicker engine and use the Power Steering system without you primary engine running. This system allows you to connect to a deep cell battery (not your starter battery) and the system will provide normal power steering from the wheel. The system will alert you when your auxiliary battery is below 9.5 volts. This signal means that you must start your primary engine to change the battery system. This kit will save the starting battery for primary starting use only.

Verado Power Steering systems with a kicker engine 135-200 Verado

ELECTRICAL ISOLATOR KIT- DUAL OPTI



8M0073037

Used to add Power steering option to Dual OptiMax engines

Dual OptiMax Engines

ELECTRICAL ISOLATOR KIT- TRIPLE OPTI



8M0073038

Used to add Power steering option to Triple OptiMax engines

Triple OptiMax Engines

ELECTRICAL HARDWARE

ELECTRICAL HARDWARE KIT



86-813937A 2

Contains a broad selection of the electrical connectors used on Mercury/Mariner/ Force and MerCruiser products.

BULLET TERMINAL RECEPTACLE



86-813936T

.18 in.(5 mm) Dia.

Priced & packaged in qty. of 20

BULLET TERMINAL RECEPTACLE



86- 87223T

.156 in.(4 mm) Dia., two wire.

Priced & packaged in qty. of 20

BULLET TERMINAL RECEPTACLE



86-814433T
.156 in.(4 mm) Dia.
Priced & packaged in qty. of 20

BULLET TERMINAL



86-814434T
.156 in.(4 mm) Dia.
Priced & packaged in qty. of 20

BULLET TERMINAL



86-813937T
.18 in.(5 mm) Dia.
Priced & packaged in qty. of 20

RING TERMINAL



86- 60878T
#10
Priced & packaged in qty. of 20

RING TERMINAL



86- 98199T
#10 Self Locking
Priced & packaged in qty. of 20

RING TERMINAL



86- 60602T
.25 in.(6 mm) Dia.
Priced & packaged in qty. of 20

RING TERMINAL



86- 61606T
.312 in.(8 mm) Dia. ring terminal.
Priced & packaged in qty. of 20

BULLET TERMINAL RECEPTACLE INSULATOR



85- 17198
.156 in.(4 mm) Dia.
Priced individually, sold @ multiples of 20

BULLET TERMINAL RECEPTACLE INSULATOR



85- 17199
.156 in.(4 mm) Dia., one wire
Priced individually, sold @ multiples of 20

BULLET TERMINAL RECEPTACLE INSULATOR



85- 17200
.156 in.(4 mm) Dia., two wire
Priced individually, sold @ multiples of 20

HEAT SHRINK TUBING



57908 11
Heat Shrink Tubing. .25 in.(6 mm) Dia. x 10 inches long.

SPLICE CLIP



86- 60831T
Splice Clip.
Priced & packaged in qty. of 20

CRIMPING TOOL



91-808696
Crimps the electrical connector to the wire.

QUICKSILVER FUNNEL ENTRY VINYL TERMINALS

RING TERMINAL



67-851730
12-10 gauge, Ring #10
Priced & packaged in qty. of 20

67-851734
12-10 gauge, Ring 5/16 in.
Priced & packaged in qty. of 15

67-851737
12-10 gauge, Ring 3/8 in.
Priced & packaged in qty. of 65

FEMALE TAB DISCONNECT



67-851760
22-18 gauge, .187 in.
Priced & packaged in qty. of 25

67-851761
22-18 gauge, .187 in.
Priced & packaged in qty. of 100

67-851762
22-18 gauge, .250 in.
Priced & packaged in qty. of 25

67-851764
16-14 gauge, .187 in.
Priced & packaged in qty. of 25

67-851765
16-14 gauge, .187 in.
Priced & packaged in qty. of 100

67-851766
16-14 gauge, .250 in.
Priced & packaged in qty. of 25

67-851767
16-14 gauge, .250 in.
Priced & packaged in qty. of 75

67-851768
12-10 gauge, .250 in.
Priced & packaged in qty. of 20

MALE NYLON COUPLER

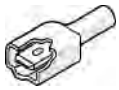

67-851773

16-14 gauge, .250 in.
Priced & packaged in qty. of 50

SELF-STRIPPING FEMALE T-TAP CONNECTORS



67-851794

18-14 Gauge
Priced & packaged in qty. of 25

MULTI-STACK DISCONNECT



67-851796

16-14 gauge .250" Tab
Priced & packaged in qty. of 30

DOUBLE MALE-FEMALE ADAPTER PB



67-851798

.250" Tab
Priced & packaged in qty. of 40

QUICKSILVER HEAT SHRINKABLE CONNECTORS AND TUBING

RING TERMINAL



67-851691

12-10 gauge #10
Priced & packaged in qty. of 10

MALE QUICK DISCONNECT



67-851706

16-14 gauge
Priced & packaged in qty. of 100

FEMALE QUICK DISCONNECT



67-851710

16-14 gauge
Priced & packaged in qty. of 100

SELF-IGNITING ULTRATORCH FLAMELESS HEAT TOOL



67-854274

This butane powered Heat Tool is completely portable and is perfect for soldering and heat shrink applications. It features a single slide ignition system - no matches or lighters required. With its adjustable temperature range and approximate operating time of 1.25 hours, this is the ideal heat tool for marine field service applications. It comes standard with soldering iron tip , heat tip and cap.

FUSES AND CIRCUIT BREAKERS

FUSE



88- 79091

20 amp
Priced individually, sold @ multiples of 5

FUSE HOLDER CABLE



84- 95084A10

Female connector

FUSE HOLDER CABLE



84- 95084A13

Male connector

FUSE



88-832969 2

2 amp mini fuse

FUSE



88-832969T05

5 amp mini fuse

FUSE



88-832969 10

10 amp mini fuse

Fits 1999 & newer V-6 & V-8 EFI engines with MEFI 3 ignition

FUSE



88-832969T15

15 amp mini fuse

Fits 1999 & newer V-6 & V-8 EFI engines with MEFI 3 ignition

FUSE



88-832969T20

20 amp mini fuse

FUSE



88-832969T25

25 amp mini fuse

FUSE



88-832969 30

30 amp mini fuse

FUSE



862646

5 amp

Among other applications, this fuse can be found in the DTS Power Harness.

FUSE



862647
10 amp fuse

FUSE



88-812619
20 amp fuse

FUSE ASSEMBLY



88- 79023T56
55 amp

88- 79023T90
90 amp with 5/16 in. (8 mm) diameter mounting hole

88- 79023A91
90 amp with 13/32 in. (10 mm) diameter mounting hole
Used on Verado power steering as well as various MerCruiser starter applications.

FUSE 50 AMP



88- 79023A94
50 Amp fuse used with Power Steering System. APS to Battery
Power Steering System

FUSE COVER ASY



879346T24
Used with Fuse/Harness asy for Power Steering Systems
Power Steering Systems

FUSE ASSEMBLY



88- 79023T10
110 amp

CIRCUIT BREAKER



88-8M0085705
20 amp for power trim pump

CIRCUIT BREAKER



88- 11178A01
50 amp w/ nut connections. Includes attaching hardware

CABLE TIES

CABLE TIE



69355

5-1/2 in. (140 mm) long, black color, 1/16 in. to 1-1/4 in. (1.6-32 mm) bundle diameter.

Priced individually, sold @ multiples of 100

CABLE TIE



54-816311T

8 in. (203 mm) long, black color, 3/8 in. to 1-3/4 in. (9.5-44 mm) bundle diameter, 60 lbs.(27 kg) minimum loop tensile strength

Priced individually, sold @ multiples of 100

STANDARD CABLE TIE



54-8M0064023

Standard 11 in. (280 mm) long, black color, 1/16 in.-3 in.(1.6-76 mm) bundle diameter, 50 lbs.(23 kg) minimum loop tensile strength, 1000 pcs./bag

Priced individually, sold @ multiples of 100

TOOLS

14 PIN DEPINNING TOOL



91-896352A01

Used to remove pins on 14 pin DTS and non-DTS harnesses

CABLE PULLER



888462A 1

Used to pull data harnesses thru rigging tubes

STEERING

STEERING WHEELS

STEERING WHEEL



67-829140A01

Legend Steering Wheel with soft grip and wheel center This product is a four-spoke wheel design.

Wheel Dia.: 13-1/2 inch
Dish: 3-7/8 inch

STEERING WHEEL-V60 BLACK



67-892762A05

This wheel is a great value with soft grip and great looks. This Steering Wheel is a three-spoke design with a black grip and black spokes. Thermoplastic antishock material. Meets with EN 28848 and ABYC P22 standards. (includes hub)

13.8 inch (350 mm) wheel diameter • Standard .75 inch (19 mm) taper

STEERING WHEEL-CORSE B/S



67-892762A01

This wheel is a great value with soft grip and great looks. This Steering Wheel is a three-spoke design with a soft black grip and silver spokes. Meets with EN 28848 and ABYC P22 standards. (includes hub).

13.8 inch (350 mm) wheel diameter • Standard .75 inch (19 mm) taper

STEERING WHEEL- NISIDA B/B



67-892762A02

This wheel is a great value with polyurethane grip and great looks. This Steering Wheel is a three-spoke design with a black leather look soft grip and black spokes. Meets with EN 28848 and ABYC P22 standards. (includes hub)

Wheel Dia.: 13.8 inch (350 mm)
Std 3/4 inch taper

STEERING WHEEL- SPARGI SS



67-892762A03

This wheel is a great value with polyurethane grip and great looks. This Steering Wheel is a three-spoke design with a air leather look with silver grip and silver Alum. spokes. Meets with EN 28848 and ABYC P22 standards. (includes hub)

13.8 inch (350 mm) wheel diameter • Standard .75 inch (19 mm) taper

STEERING WHEEL- SPARGI BR/S



67-892762A04

This wheel is a great value with polyurethane grip and great looks. This Steering Wheel is a three-spoke design with a air leather look with Burlwood grip and silver Alum. spokes. Meets with EN 28848 and ABYC P22 standards. (includes hub)

13.8 inch (350 mm) wheel diameter • Standard .75 inch (19 mm) taper

STEERING WHEEL- SPARGI TIT/BR



67-892762A07

This wheel is a great value with polyurethane grip and great looks. This Steering Wheel is a three-spoke design with a air leather look with brown grip and brown Alum. spokes. Meets with EN 28848 and ABYC P22 standards. (includes hub)

13.8 inch (350 mm) wheel diameter • Standard .75 inch (19 mm) taper

STEERING WHEEL- PONZI S/S



67-892762A06

This wheel is a great value and great looks. This Steering Wheel is a three-spoke design with Silver Spokes and Silver Grip. Meets with EN 28848 and ABYC P22 standards. (includes hub)

13.8 inch (350 mm) wheel diameter • Standard .75 inch (19 mm) taper

TILLER HANDLE STEERING- BIG TILLER

The Big Tiller has improved features and is designed to allow driving a large tiller Outboard engine easily, safely and is ergonomically friendly. The Big Tiller is used on large 40-115 HP FourStroke, 75-250 HP OptiMax, 135-200 HP 4 cylinder DTS Verado engines.

MECHANICAL TILLER WITH P/S



8M0094637

The Big Tiller is designed for optimal performance and ergonomic comfort. With improved friction adjustments, a hydraulic locking feature eliminating torque, easy access to the throttle shift handle and a trim button at the end of the handle the Big Tiller provides safe and effortless operation. The RPM Adjustment switch (Troll Control) is included as standard equipment on this model.

The LED light switch is available as an option on this model.

Power Steering is strongly recommended for 75 HP and above.
75-115 HP FourStroke
75-115 HP 1.5L OptiMax
Power Steering is required - 135-250 HP OptiMax (2.5.L and 3.0L)

DTS TILLER HANDLE WITH P/S



8M0098585

The Big Tiller is designed for optimal performance and ergonomic comfort. With improved friction adjustments, a hydraulic locking feature eliminating torque, easy access to the throttle and shift handle and a trim button at the end of the handle the Big Tiller provides safe and effortless operation.

The RPM Adjustment (Troll Control) and LED light switch are standard on this model.

Power Steering is required - 135-200 HP 4 Cylinder Verado.

MECHANICAL TILLER WITH P/S



8M0061721

The Big Tiller is designed for optimal performance and ergonomic comfort. With improved friction adjustments, a hydraulic locking feature eliminating torque, easy access to the throttle and shift handle and a trim button at the end of the handle the Big Tiller provides safe and effortless operation. The RPM adjustment switch (Troll Control) is included as standard equipment on this model.

The LED light switch is available as an option on this model.

Power Steering is strongly recommended for 75 HP and above.
The Big Tiller kit (Power Steering) with extra length and bent arm to attach to the 150 HP FourStroke engine.

MECHANICAL TILLER WITHOUT P/S



8M0093581

The Big Tiller is designed for optimal performance and ergonomic comfort. With improved friction adjustments, a hydraulic locking feature eliminating torque, easy access to the throttle and shift handle and a trim button at the end of the handle the Big Tiller provides safe and effortless operation.

The RPM Adjustment (Troll Control) and LED light switch are optional on this model.

Tiller is 3 inches shorter than previous model p/n 8M0074795.

Power Steering is strongly recommended for 75 HP and above.
75-115 HP FourStroke
75-115 HP 1.5L OptiMax

MECHANICAL TILLER WITHOUT P/S



879291A04

The Big Tiller is designed for optimal performance and ergonomic comfort. With improved friction adjustments, a hydraulic locking feature eliminating torque, easy access to the throttle and shift handle and a trim button at the end of the handle the Big Tiller provides safe and effortless operation.

The RPM Adjustment (Troll Control) and LED light are optional on this model.

T/S kit 40 - 60 HP not included

40-60 HP FourStroke used with ELPT generation change S/N 1C050252 and above.

MECHANICAL TILLER WITHOUT P/S



879291A05

The Big Tiller is designed for optimal performance and ergonomic comfort. With improved friction adjustments, a hydraulic locking feature eliminating torque, easy access to the throttle and shift handle and a trim button at the end of the handle the Big Tiller provides safe and effortless operation.

The RPM Adjustment (Troll Control) and LED light switch are optional on this model.

This is a conversion kit that allows installation of the Big Tiller on a current tiller handle model ELHPT 40 - 60 HP FourStroke with generation change S/N 1C050252 and above.
T/S kit 40 - 60 HP is not included.

THROTTLE AND SHIFT KIT- 40-60 FOURSTROKE



897978K04

The kit includes 2 - T/S cables. These cables are designed to provide best in class installation for this engine family.

The kit is designed to work with the 40 - 60 HP engines. This kit is not compatible with Jet Outboard engines.

THROTTLE AND SHIFT KIT- 75-115 FOURSTROKE TILLER



897978K01

The kit includes 2 - T/S cables. These cables are designed to provide the best in class installation for this engine family.

The kit is designed to work with the 75-115 HP FourStroke engines.

8M0082864

The kit includes 2 - T/S cables. These cables are designed to provide the best in class installation for this engine family.

The kit is designed to work with the 75-115 HP FourStroke engines. (Upgrade with no spacer Ref Tiller Arm 8M0093581).

THROTTLE AND SHIFT KIT- 150 FOURSTROKE



8M0061103

The kit includes 2 - T/S cables. These cables are designed to provide best in class installation for this engine family.

The kit is designed to work with 150 HP FourStroke engines.

THROTTLE AND SHIFT KIT- 75-115 1.5L OPTIMAX TILLER

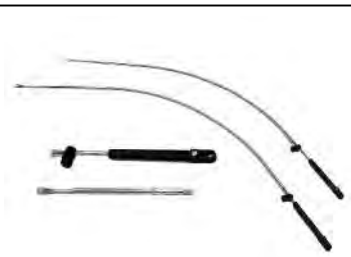

897978K02

The kit includes 2 - T/S cables. These cables are designed to provide the best in class installation for this engine family.

The kit is designed to work with 75 - 115 HP OptiMax engines.

8M0082867

The kit includes 2 - T/S cables. These cables are designed to provide the best in class installation for this engine family.

The kit is designed to work with the 75 - 115 HP OptiMax engines. (Upgrade with no spacer Ref Tiller Arm 8M0093581).

THROTTLE AND SHIFT KIT- 135-250 OPTIMAX



897978K03

The kit includes 2 - T/S cables. These cables are designed to provide the best in class installation for this engine family.

The kit is designed to work with the 135 - 250 HP OptiMax engines.

TROLL CONTROL KIT



87-8M0083437

RPM adjustment at your finger tips. This kit can be added to the Big Tiller Mechanical without P/S as an option

LED LIGHT AND SWITCH KIT



897978T02

New LED light and Switch Kit is an option on all Mechaincal Big Tiller units. Allows for easy installation on the new Big Tiller. Light up your boat with a soft Amber light to make night fishing or early morning fishing more fexible.

OUTBOARD STABILIZER CLIPS- TRAILERING



64-891762A04

Helps keep engine centered during trailering
Safety orange durable plastic material

Fits most cylinder rods on engines manufactured in 1997 and newer.
Snaps over outboard's hydraulic steering cylinder rods

POWER STEERING - SINGLE

STEERING KIT 40 CM3 STANDARD HELM



892380K05

Complete Power Steering Rigging Kit that includes the Power Steering Module (4 ft. lead) Std 40 CM3 Helm and engine signal harness 20 ft. in length. Hoses need to be ordered separately for Cylinder to Helm kit and Power Module to Helm Kit.

Multiple Engine 150 FourStrokes and Optimax (No Single engines), Verado 135-200 4 Cylinder, 200-350 HP Verado, 350 SCI and 400R.

892380K11

Complete Power Steering Rigging Kit that includes the Power Steering Module (12 ft. lead), Std 40 CM3 Helm and engine signal harness 20 ft. in length. Hoses need to be ordered separately Cylinder to Helm kit and Power Module to Helm Kit.

Multiple Engine 150 FourStrokes and Optimax (No Single engines), Verado 135-200 4 Cylinder, 200-350 HP Verado, 350 SCI and 400R.

892380K12

Complete Power Steering Rigging Kit that includes the Power Steering Module (24 ft. lead), Std 40 CM3 Helm and engine signal harness 20 ft. in length. Hoses need to be ordered separately Cylinder to helm kit and Power Module to Helm Kit.

Multiple Engine 150 FourStrokes and Optimax (No Single engines), Verado 135-200 4 Cylinder, 200-350 HP Verado, 350 SCI and 400R.

STEERING KIT 40 CM3 TILT



892560K35

Complete Power Steering Rigging Kit that includes the Power Steering Module (4 ft. lead), Tilt 40 CM3 Helm and engine signal harness 20 ft. in length. Hoses need to be ordered separately Cylinder to Helm kit and Power Module to Helm Kit.

Multiple Engine 150 FourStrokes and Optimax (No Single engines), Verado 135-200 4 Cylinder, 200-350 HP Verado, 350 SCI and 400R.

STEERING KIT 40 CM3 TILT



892560K31

Complete Power Steering Rigging Kit that includes the Power Steering Module (12 ft. lead), Tilt 40 CM3 Helm and engine signal harness 20 ft. in length. Hoses need to be ordered separately Cylinder to Helm kit and Power Module to Helm Kit.

Multiple Engine 150 FourStrokes and Optimax (No Single engines), Verado 135-200 4 Cylinder, 200-350 HP Verado, 350 SCI and 400R.

STEERING KIT 40 CM3 TILT

892560K32

Complete Power Steering Rigging Kit that includes the Power Steering Module (24 ft. lead), Tilt 40 CM3 Helm and engine signal harness 20 ft. in length. Hoses need to be ordered separately Cylinder to Helm kit and Power Module to Helm Kit.

Multiple Engine 150 FourStrokes and Optimax (No Single engines), Verado 135-200 4 Cylinder, 200-350 HP Verado, 350 SCI and 400R.

POWER STEERING - DUAL

STEERING KIT 40 CM3 STD HELM - DUAL



892380K36

Complete Power Steering Dual Rigging Kit that includes the Power Steering Module (4 ft. lead), Std 40 CM3 Helm, Dual engine adapter harness, Automatic Power switch and two engine signal harnesses 20 ft. in length. Hoses need to be ordered separately Cylinder to helm kit and Power Module to Helm Kit. When using 50 amp fuse product you will need to order a Fuse/Harness Assembly when installing more than one battery.

Multiple Engine 150 FourStrokes and Optimax (No Single engines), Verado 135-200 4 Cylinder and 200-350 HP Verado.

STEERING KIT 40 CM3 STD HELM

892380K33

Complete Power Steering Dual Rigging Kit that includes the Power Steering Module (12 ft. lead), Std 40 CM3 Helm, Dual engine adapter harness, Automatic Power switch and two engine signal harnesses 20 ft. in length. Hoses need to be ordered separately Cylinder to helm kit and Power Module to Helm Kit. When using 50 amp fuse product you will need to order a Fuse/Harness Assembly when installing more than one battery.

Multiple Engine 150 FourStrokes and Optimax (No Single engines), Verado 135-200 4 Cylinder and 200-350 HP Verado.

892380K34

Complete Power Steering Dual Rigging Kit that includes the Power Steering Module (24 ft. lead), Std 40 CM3 Helm, Dual engine adapter harness, Automatic Power Switch and two engine signal harnesses 20 ft. in length. Hoses need to be ordered separately Cylinder to helm kit and Power Module to Helm Kit. When using 50 amp fuse product you will need to order a Fuse/Harness Assembly when installing more than one battery.

Multiple Engine 150 FourStrokes and Optimax (No Single engines), Verado 135-200 4 Cylinder and 200-350 HP Verado.

STEERING KIT 40 CM3 TILT



892560K56

Complete Power Steering Dual Rigging Kit that includes the Power Steering Module (4 ft. lead), Tilt 40 CM3 Helm, Dual engine adapter harness, Automatic Power Switch and two engine signal harnesses 20 ft in length. Hoses need to be ordered separately Cylinder to Helm kit and Power Module to Helm Kit. When using 50 amp fuse product you will need to order a Fuse/Harness Assembly when installing more than one battery.

Multiple Engine 150 FourStrokes and Optimax (No Single engines), Verado 135-200 4 Cylinder and 200-350 HP Verado.

STEERING KIT 40 CM3 TILT



892560K53

Complete Power Steering Dual Rigging Kit that includes the Power Steering Module (12 ft. lead), Tilt 40 CM3 Helm, Dual engine adapter harness, Automatic Power Switch and two engine signal harnesses 20 ft. in length. Hoses need to be ordered separately Cylinder to Helm kit and Power Module to Helm Kit. When using 50 amp fuse product you will need to order a Fuse/Harness Assembly when installing more than one battery.

Multiple Engine 150 FourStrokes and Optimax (No Single engines), Verado 135-200 4 Cylinder and 200-350 HP Verado.

892560K54

Complete Power Steering Dual Rigging Kit that includes the Power Steering Module (24 ft. lead), Tilt 40 CM3 Helm, Dual engine adapter harness, Automatic Power switch and two engine signal harnesses 20 ft. in length. Hoses need to be ordered separately Cylinder to Helm kit and Power Module to Helm Kit. When using 50 amp fuse product you will need to order a Fuse/Harness Assembly when installing more than one battery.

Multiple Engine 150 FourStrokes and Optimax (No Single engines), Verado 135-200 4 Cylinder and 200-350 HP Verado.

POWER STEERING - TRIPLE

POWER STEERING 50 CM3 RIGGING KIT



892558K33

This Power Steering Triple Rigging Kit includes 1 50 CM3 Std Helm, 3 Signal harnesses 30 ft. connect each engine to Power Module, 1 Power Module with 4 ft. battery leads, Automatic Power Switch and a Triple Engine Power Module Adapter to connect the signal wires (Use when the power module and batteries are mounted under the console). Hose kits ordered separately. When using 50 amp fuse product you will need to order a Fuse/Harness Assembly when installing more than one battery.

Multiple Engine 150 FourStrokes and Optimax (No Single engines), Verado 135-200 4 Cylinder, 200-350 HP Verado, 350 SCI and 400R.

POWER STEERING RIGGING KIT

892558K31

This Power Steering Triple Rigging Kit includes 1 50 CM3 Std Helm, 3 Signal harnesses 30 ft. connect each engine to Power Module, 1 Power Module with 12 ft. leads, Automatic Power Switch and a Triple Engine Power Module Adapter to connect the signal wires (Use when the power module and batteries are mounted under the console). Hose kits ordered separately. When using 50 amp fuse product you will need to order a Fuse/Harness Assembly when installing more than one battery.

Multiple Engine 150 FourStrokes and Optimax (No Single engines), Verado 135-200 4 Cylinder, 200-350 HP Verado, 350 SCI and 400R.

892558K32

This Power Steering Triple Rigging Kit includes 1 50 CM3 Std Helm, 3 Signal harnesses 30 ft. connects each engine to Power Module, 1 Power Module with 24 ft. leads, Automatic Power Switch and a Triple Engine Power Module Adapter to connect the signal wires (Use when the power module is mounted in the back and the batteries are mounted under the console). Hose kits ordered separately. When using 50 amp fuse product you will need to order a Fuse/Harness Assembly when installing more than one battery.

Multiple Engine 150 FourStrokes and Optimax (No Single engines), Verado 135-200 4 Cylinder, 200-350 HP Verado, 350 SCI and 400R.

POWER STEERING RIGGING KIT



892516K53

This Power Steering Triple Rigging Kit includes 1 50 CM3 Tilt Helm, 3 Signal harnesses 30 ft long connect each engine to Power Module, 1 Power Module with 4 ft. leads, 2 each Automatic Power Switch and a Triple Engine Power Module Adapter to connect the signal wires (Use when the power module and the batteries are mounted under the console). Hose kits ordered separately. When using 50 amp fuse product you will need to order a Fuse/Harness Assembly when installing more than one battery.

Multiple Engine 150 FourStrokes and Optimax (No Single engines), Verado 135-200 4 Cylinder, 200-350 HP Verado, 350 SCI and 400R.

892516K51

This Power Steering Triple Rigging Kit includes 1 50 CM3 Tilt Helm, 3 Signal harnesses 30 ft. connect each engine to Power Module, 1 Power Module with 12 ft. leads, Automatic Power Switch and a Triple Engine Power Module Adapter to connect the signal wires (Use when the power module and the batteries are mounted under the console). Hose kits ordered separately. When using 50 amp fuse product you will need to order a Fuse/Harness Assembly when installing more than one battery.

Multiple Engine 150 FourStrokes and Optimax (No Single engines), Verado 135-200 4 Cylinder, 200-350 HP Verado, 350 SCI and 400R.

POWER STEERING TILT RIGGING KIT

892516K52

This Power Steering Triple Rigging Kit includes 1 50 CM3 Tilt Helm, 3 Signal harnesses 30 ft. connects each engine to Power Module, 1 Power Module with 24 ft. leads, Automatic Power Switch and a Triple Engine Power Module Adapter to connect the signal wires (Use when the power module is mounted in the back and the batteries are mounted under the console). Hose kits ordered separately. When using 50 amp fuse product you will need to order a Fuse/Harness Assembly when installing more than one battery.

Multiple Engine 150 FourStrokes and Optimax (No Single engines), Verado 135-200 4 Cylinder, 200-350 HP Verado, 350 SCI and 400R.

POWER STEERING - QUAD

POWER STEERING RIGGING KIT



892516K63

This Power Steering Quad Rigging Kit includes 1 50 CM3 Tilt Helm, 4 Signal harnesses 30 ft. connect each engine to Power Module, 1 Power Module with 4 ft. leads, 2 each Automatic Power Switch and a Quad Engine Power Module Adapter to connect the signal wires (Use when the power module and the batteries are mounted under the console). Hose kits ordered separately. When using 50 amp fuse product you will need to order a Fuse/Harness Assembly when installing more than one battery.

Multiple Engine 150 FourStrokes and Optimax (No Single engines), Verado 135-200 4 Cylinder, 200-350 HP Verado, 350 SCI and 400R.

POWER STEERING RIGGING KIT- QUAD

892516K61

This Power Steering Quad Rigging Kit includes 1 50 CM3 Tilt Helm, 4 Signal harnesses 30 ft. connect each engine to Power Module, 1 Power Module with 12 ft. leads, 2 each Automatic Power Switch and a Quad Engine Power Module Adapter to connect the signal wires (Use when the power module and the batteries are mounted under the console). Hose kits ordered separately. When using 50 amp fuse product you will need to order a Fuse/Harness Assembly when installing more than one battery.

Multiple Engine 150 FourStrokes and Optimax (No Single engines), Verado 135-200 4 Cylinder, 200-350 HP Verado, 350 SCI and 400R.

POWER STEERING RIGGING KIT

892516K62

This Power Steering Quad Rigging Kit includes 1 50 CM3 Tilt Helm, 4 Signal harnesses 30 ft. connects each engine to Power Module, 1 Power Module with 24 ft. leads, 2 Automatic Power Switch and a Quad Engine Power Module Adapter to connect the signal wires (Use when the power module is mounted in the back and the batteries are mounted under the console). Hose kits ordered separately. When using 50 amp fuse product you will need to order a Fuse/Harness Assembly when installing more than one battery.

Multiple Engine 150 FourStrokes and Optimax (No Single engines), Verado 135-200 4 Cylinder, 200-350 HP Verado, 350 SCI and 400R.

POWER STEERING COMPONENTS

HELM - POWER STEERING - STANDARD



892380A02

Power Steering helm with a fixed position mount. Includes cover, bracket and mounting hardware. (40 CM3) 4.1 turns lock to lock with one cylinder

Multiple Engine 150 4 strokes and Optimax (No Single engines) , Verado 135-200 4 cylinder, 200-300 Verado 6 cylinder, 350 SCI

HELM - POWER STEERING -TILT



8M0030272

Power Steering Helm 40 CM3 Tilt. Includes all brackets and hardware needed to install helm.
Provides 4.1 turns lock to lock with one cylinder

Multiple Engine 150 4 strokes and Optimax (No Single engines) , Verado 135-200 4 cylinder, 200-300 Verado 6 cylinder, 350 SCI

HELM - POWER STEERING - STANDARD



892558A02

Power Steering helm with a fixed position mount. Includes cover, bracket and mounting hardware.(50 CM3) Use with dual cylinder applications such as triple/ quad engine installations. (6.5 turns lock to lock with two cylinders)

Multiple Engine 150 4 strokes and Optimax (No Single engines), Verado 135-200 4 cylinder, 200-300 Verado 6 cylinder, 350 SCI

HELM - POWER STEERING -TILT



8M0030273

Power Steering Helm 50 CM3 Tilt. Includes all brackets and hardware needed to install helm.
Provides 6.5 turns lock to lock with two cylinders. Recommended for triple and quad engine installations.

Multiple Engine 150 4 strokes and Optimax (No Single engines), Verado 135-200 4 cylinder, 200-300 Verado 6 cylinder, 350 SCI

HELM - POWER STEERING - STANDARD



892557A02

Power Steering helm with a fixed position mount. Includes cover, bracket and mounting hardware. (32 CM3) Provides 5.1 turns lock to lock vs 4.1 turns lock to lock as option with one cylinder.

Multiple Engine 150 4 strokes and Optimax (No Single engines),Verado 135-200 4 cylinder, 200-300 Verado 6 cylinder, 350 SCI

HELM - POWER STEERING -TILT



8M0001589

Power Steering Helm 32 CM3 Tilt. Includes all brackets and hardware needed to install helm.
Provides 5.1 turns lock to lock vs 4.1 turns lock to lock as option with one cylinder

Verado 200- 300 HP- Optional on 135 to 200 HP
Multiple OptiMax Engines

HELM DUAL STATION - STANDARD



895816A02

Power Steering dual helm with a fixed position mount. Includes cover, bracket and mounting hardware.(40 CM3) Needs 32-892825___ hose to attach pressure lines (lengths come in 8 ft to 25 ft lengths). Use as primary station when using dual helms or stations. Use standard helm as the secondary station.

Multiple Engine 150 4 strokes and Optimax (No Single engines), Verado 135-200 4 cylinder, 200-300 Verado 6 cylinder, 350 SCI

HELM DUAL STATION - TILT



895818K12

Power Steering dual helm with a tilt position mount. Includes cover, bracket and mounting hardware. (40 CM3) Needs 32-892825___ hose to attach pressure lines (lengths come in 8 ft to 25 ft lengths) Use as primary station when using dual helms or stations. Use standard helm as the secondary station.

Multiple Engine 150 4 strokes and Optimax (No Single engines) , Verado 135-200 4 cylinder, 200-300 Verado 6 cylinder, 350 SCI

HELM DUAL STATION - STANDARD



895817A02

Power Steering dual helm with a fixed position mount. Includes cover, bracket and mounting hardware. (50 CM3) Needs 32-892825___ hose to attach pressure lines (lengths come in 8 ft to 25 ft lengths) Use as primary station when using dual helms or stations. Use standard helm as the secondary station.

Multiple Engine 150 4 strokes and Optimax (No Single engines) , Verado 135-200 4 cylinder, 200-300 Verado 6 cylinder, 350 SCI

HELM DUAL STATION - TILT



895819K12

Power Steering dual helm with a tilt position mount. Includes cover, bracket and mounting hardware. (50CM3) Needs 32-892825___ hose to attach pressure lines (lengths come in 8 ft to 25 ft lengths) Use as primary station when using dual helms or stations. Use standard helm as the secondary station.

Multiple Engine 150 4 strokes and Optimax (No Single engines) , Verado 135-200 4 cylinder, 200-300 Verado 6 cylinder, 350 SCI

POWER STEERING TILT



8M0001585

Replacement part for Power Steering Tilt System

All Power Steering Verado Systems

KEYWAY - POWER STEERING-SHORT KEY



28-893394002

Used with power steering to locate steering wheel hub.

2005 and newer Verado 200-275 and 2006 Verado 135-175 Power Steering installs

Priced individually, sold @ multiples of 2

CYLINDER - HYDRAULIC OR POWER STEERING



898349A11

Cylinder designed to meet all Power Steering strength and performance requirements. This cylinder is the most robust design in the market. Includes all hardware to mount this cylinder including the strongest bolts to attach to the engine.

Verado 175-200 - both Power Steering or Hydraulic V6/1.5 Opti Max Hydraulic - 1.5L Opti needs to order arm 898082A03 to provide clearance
75-150 4 stroke engines.

CYLINDER - HYDRAULIC OR P/S- COUNTER ROTATION



898349A14

Port ot counter rotation cylinder designed to meet all Power Steering strength and performance requirements. This cylinder is the most robust design in the market. Includes all hardware to mount this cylinder including the strongest bolts to attach to the engine

Verado 135-200 - both Power Steering or Hydraulic. Multiple Engines V6/1.5 Opti Max Hydraulic - 1.5L Opti needs to order arm 898082A03 to provide clearance 75-115 4 stroke engines Multiple OtiMax engines - P/S 150 4 Stroke engines.

CYLINDER - BIG TILLER



898349A15

Cylinder designed to meet all Power Steering strength and performance requirements. This cylinder is the most robust design in the market. Includes all hardware to mount this cylinder including the strongest bolts to attach to the engine.

Big Tiller Cylinder - 75-115 4 Stroke, 75-115 1.5L Opti, 135-250 2.5L/3.0L Opti and 135-200 4 Cylinder Verado

CYLINDER- POWER STEERING - BIG TILLER



8M0058944

This cylinder was released with a special bent arm that provides more clearance and is longer than the others. It is unique to the Big Tiller Power Steering . Used in complete Kit 8M0061721. 150 - 4S

150 HP 4 Stroke Big Tiller

POWER STEERING CYLINDER



896500A01

Used to add a cylinder to a counter rotation engine for multiple engine installations. Also used with liquid tie bar 893396A01 to add a cylinder to operate engines mounted more than 34 in. apart

2005 and newer Verado 200-300 L6 and 350 SCI

CYLINDER - SHORTER STROKE



8M0072601

This cylinder has s shorter stroke than the normal production cylinders. It is used for installations where engines are mounted inside the normal 26 inch distance. This cylinder reduces the chances of the engines hitting with these tight mounting options

Verado 6 Cylinder Power Steering applications for mounting engines closer that the normal tie bar 26 inch distance.

POWER STEERING MODULE



8M0080199

Power Steering pump and motor with 4 ft leads. Hoses sold separately (32-892438A__, lengths from 2 ft to 8 ft (one foot increments) and 10 ft to 24 ft (two foot increments). Also requires 84-893371T__(comes in 10, 20, and 30 ft lengths) to connect power module to engine. 50 Amp fuse used. When using this pump in multiple engine installations, you will need to order 898289T77, T78 or T79.

Multiple Engine 150 4 strokes and Optimax (No Single engines), Verado 135-200 4 cylinder, 200-300 Verado 6 cylinder, 350 SCI

POWER STEERING MODULE

8M0080200

Power Steering pump and motor with 12 ft leads. Hoses sold separately (32-892438A__, lengths from 2 ft to 8 ft (one foot increments) and 10 ft to 24 ft (two foot increments). Also requires 84-893371T__(comes in 10, 20, and 30 ft lengths) to connect power module to engine. 50 Amp fuse used. When using this pump in multiple engine installations, you will need to order 898289T77, T78 or T79 .

Multiple Engine 150 4 strokes and Optimax (No Single engines), Verado 135-200 4 cylinder, 200-300 Verado 6 cylinder, 350 SCI

POWER STEERING MODULE

8M0080201

Power Steering pump and motor with 24 ft leads. Hoses sold separately (32-892438A__, lengths from 2 ft to 8 ft (one foot increments) and 10 ft to 24 ft (two foot increments). Also requires 84-893371T__(comes in 10, 20, and 30 ft lengths) to connect power module to engine. 50 Amp fuse used. When using this pump in multiple engine installations, you will need to order 898289T77, T78 or T79.

Multiple Engine 150 4 strokes and Optimax (No Single engines), Verado 135-200 4 cylinder, 200-300 Verado 6 cylinder, 350 SCI

FUSE ASSEMBLY



88- 79023A93

90 amp with 13/32 in. (10 mm) diameter mounting hole

Used on Verado power steering as well as various MerCruiser starter applications.

FUSE 50 AMP



88- 79023A94

50 Amp fuse used with Power Steering System. APS to Battery

Power Steering System

FUSE COVER ASY



879346T24

Used with Fuse/Harness asy for Power Steering Systems

Power Steering Systems

FUSE/HARNESS ASSEMBLY



84-898289T77

New 3 FT fuse /harness asy will be used with the new 50 amp Power Steering circuit. It will coneect from the APS moudule to the battery. Used with Power Steering Pumps 892440A17,A18 and A19

Used on all Power Steering installations

84-898289T78

New 5 FT fuse /harness asy will be used with the new 50 amp Power Steering circuit. It will coneect from the APS moudule to the battery. Used with Power Steering Pumps 892440A17,A18 and A19

Used on all Power Steering installations

FUSE/HARNESS ASSEMBLY



84-898289T79

New 10 FT fuse /harness asy will be used with the new 50 amp Power Steering circuit. It will coneect from the APS moudule to the battery. Used with Power Steering Pumps 892440A17,A18 and A19

Used on all Power Steering installations

POWER STEERING KIT



861659A04

Uses the Verado style Power Steering Module & Helm in conjuction with the MCM CHS cylinder.

Fits Alpha and Bravo transoms for engines without power steering pumps.

POWER STEERING HOSE- DAMPENER



32-897643A01

Hose used to reduce noise of the power steering system

Multiple Engine 150 4 strokes and Optimax (No Single engines) , Verado 135-200 4 cylinder, 200-300 Verado 6 cylinder, 350 SCI

SYNTHETIC POWER STEERING FLUID SAE 0W-30



92-858076K01

Recommended for electric power steering systems such as Verado and Axius. Recommended for transmission and steering and actuator systems for Zeus drives

Priced individually, sold @ multiples of 12

236 ml (8 fl oz) plastic bottle

Mercury Branded

SYNTHETIC POWER STEERING FLUID SAE 0W-30



92-858077K01

Recommended for electric power steering systems such as Verado, JPO and Axius Gen II. Recommended for transmission and steering and actuator systems for Zeus drives

Priced individually, sold @ multiples of 6

946 ml (32 fl oz) plastic bottle

Mercury Branded

DUAL ENGINE ADAPTER-P/S "Y" HARNESS



84-892868T01

Used to connect two engines and two signal harnesses together to run both engine from one power module. "Y" harness

Verado Engines 200-300 HP and 350 SCI - Optional on 135-200 HP

TRIPLE ENGINE ADAPTER- P/S "Y" HARNESS



84-892868T02

Used to connect three engines and three signal harnesses together to run three engine from one power module. Each engine requires a signal harness hooked up to the Power Module.

2005 Verado Engines 200-300 HP and 350 SCI - Optional on 135-200 4 cylinder Verado

QUAD ENGINE ADAPTER- P/S "Y" HARNESS



84-892868T03

Used to connect four engines and four signal harnesses together to run Quad engines from one power module. Each engine requires a signal harness hooked up to the Power Module.

2006 Verado Engines 200-300 HP and 350 SCI - Optional on 135-200 4 cylinder verado

HARNESS- POWER STEERING - SIGNAL



84-893371T10

Connects the power steering module to the engine to allow the engine and power steering to work together. 10 ft length- Multiple engine installations require one harness per engine

Verado Engines 200-300 HP and 350 SCI - Optional on 135-200 HP

84-893371T20

Connects the power steering module to the engine to allow the engine and power steering to work together. 20 ft length- Multiple engine installations require one harness per engine

Verado Engines 200-300 HP and 350 SCI - Optional on 135-200 HP

84-893371T30

Connects the power steering module to the engine to allow the engine and power steering to work together. 30 ft length- Multiple engine installations require one harness per engine

Verado Engines 200-300 HP and 350 SCI - Optional on 135-200 HP

AUTOMATIC POWER SWITCH ASSEMBLY



87-895091K03

Used with multiple engine/ battery installations when a Power Steering Pump is required. Allows the Power Steering Pump to run off port or starboard batteries. Maximum of three batteries can be used.

Verado Engines 200-300 HP and 350 SCC - Optional on 135-200 HP

ELECTRICAL ISOLATOR KIT- DUAL OPTI



8M0073037

Used to add Power steering option to Dual OptiMax engines

Dual OptiMax Engines

ELECTRICAL ISOLATOR KIT- TRIPLE OPTI



8M0073038

Used to add Power steering option to Triple OptiMax engines

Triple OptiMax Engines

POWER STEERING PRIMER MODULE



91-895040K01

Used to prep the Power Steering system. Module allows pump to be run without starting engine. Allows bleeding and testing of power Steering system out of the water.

Verado Engines 200-300 HP- Optional on 135-200 HP

RUDDER SENSOR KIT- AUTOPILOT- VERADO



898399K01

This kit will allow you to attach any AutoPilot that can read 5v or 12 v signals. Kit includes all the necessary parts needed to attach it to the Verado steering system. It includes a complete specification regarding the hydraulic installation as well. Fitting for hydraulic interface are not included. If your tie bar bracket does not have the bosses to mount the magnet, you will need to order 892367T02 as well.

Verado 200-300 HP engines and 350 SCI

HOSE KIT- P/S AND MERCURY HYDRAULIC -CYL/HELM

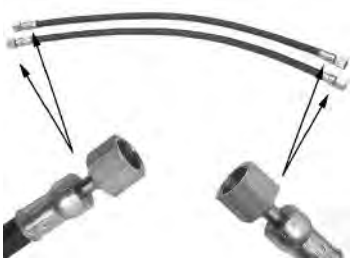

32-8M0046914

Kit includes two hoses of same length (2 ft) to connect the Helm to the Cylinder on the engine.

Verado Engines 200-300 HP- 135-200 HP (Power Steering and Mercury Hydraulic Steering) MCM Power Steering (879273A01/A02) 350 SCI

Mercury Branded

32-8M0046915

Kit includes two hoses of same length (3 ft) to connect the Helm to the Cylinder on the engine.

Verado Engines 200-300 HP- 135-200 HP (Power Steering and Mercury Hydraulic Steering) MCM Power Steering (879273A01/A02) 350 SCI

32-8M0046916

Kit includes two hoses of same length (4 ft) to connect the Helm to the Cylinder on the engine.

Verado Engines 200-300 HP- 135-200 HP (Power Steering and Mercury Hydraulic Steering) MCM Power Steering (879273A01/A02) 350 SCI

32-8M0046917

Kit includes two hoses of same length (5 ft) to connect the Helm to the Cylinder on the engine.

Verado Engines 200-300 HP- 135-200 HP (Power Steering and Mercury Hydraulic Steering) MCM Power Steering (879273A01/A02) 350 SCI

32-8M0046918

Kit includes two hoses of same length (6 ft) to connect the Helm to the Cylinder on the engine.

Verado Engines 200-300 HP- 135-200 HP (Power Steering and Mercury Hydraulic Steering) MCM Power Steering (879273A01/A02) 350 SCI

32-8M0046919

Kit includes two hoses of same length (7 ft) to connect the Helm to the Cylinder on the engine.

Verado Engines 200-300 HP- 135-200 HP (Power Steering and Mercury Hydraulic Steering) MCM Power Steering (879273A01/A02) 350 SCI

32-8M0046920

Kit includes two hoses of same length (8 ft) to connect the Helm to the Cylinder on the engine.

Verado Engines 200-300 HP- 135-200 HP (Power Steering and Mercury Hydraulic Steering) MCM Power Steering (879273A01/A02) 350 SCI

32-8M0046921

Kit includes two hoses of same length (10 ft) to connect the Helm to the Cylinder on the engine.

Verado Engines 200-300 HP- 135-200 HP (Power Steering and Mercury Hydraulic Steering) MCM Power Steering (879273A01/A02) 350 SCI

32-8M0046922

Kit includes two hoses of same length (12 ft) to connect the Helm to the Cylinder on the engine.

Verado Engines 200-300 HP- 135-200 HP (Power Steering and Mercury Hydraulic Steering) MCM Power Steering (879273A01/A02) 350 SCI

32-8M0046923

Kit includes two hoses of same length (14 ft) to connect the Helm to the Cylinder on the engine.

Verado Engines 200-300 HP- 135-200 HP (Power Steering and Mercury Hydraulic Steering) MCM Power Steering (879273A01/A02) 350 SCI

32-8M0046924

Kit includes two hoses of same length (16 ft) to connect the Helm to the Cylinder on the engine.

Verado Engines 200-300 HP- 135-200 HP (Power Steering and Mercury Hydraulic Steering) MCM Power Steering (879273A01/A02) 350 SCI

32-8M0046925

Kit includes two hoses of same length (18 ft) to connect the Helm to the Cylinder on the engine.

Verado Engines 200-300 HP- 135-200 HP (Power Steering and Mercury Hydraulic Steering) MCM Power Steering (879273A01/A02) 350 SCI

32-8M0046926

Kit includes two hoses of same length (20 ft) to connect the Helm to the Cylinder on the engine.

Verado Engines 200-300 HP- 135-200 HP (Power Steering and Mercury Hydraulic Steering) MCM Power Steering (879273A01/A02) 350 SCI

32-8M0046927

Kit includes two hoses of same length (22 ft) to connect the Helm to the Cylinder on the engine.

Verado Engines 200-300 HP- 135-200 HP (Power Steering and Mercury Hydraulic Steering) MCM Power Steering (879273A01/A02) 350 SCI

32-8M0046928

Kit includes two hoses of same length (24 ft) to connect the Helm to the Cylinder on the engine.

Verado Engines 200-300 HP- 135-200 HP (Power Steering and Mercury Hydraulic Steering) MCM Power Steering (879273A01/A02) 350 SCI

32-8M0046929

Kit includes two hoses of same length (26 ft) to connect the Helm to the Cylinder on the engine. (Power Steering)

Verado Engines 200-300 HP- 135-200 HP (Power Steering and Mercury Hydraulic Steering) MCM Power Steering (879273A01/A02) 350 SCI

32-8M0046930

Kit includes two hoses of same length (28 ft) to connect the Helm to the Cylinder on the engine.

Verado Engines 200-300 HP- 135-200 HP (Power Steering and Mercury Hydraulic Steering) MCM Power Steering (879273A01/A02) 350 SCI

32-8M0046931

Kit includes two hoses of same length (30 ft) to connect the Helm to the Cylinder on the engine.

Verado Engines 200-300 HP- 135-200 HP (Power Steering and Mercury Hydraulic Steering) MCM Power Steering (879273A01/A02) 350 SCI

32-8M0046932

Kit includes two hoses of same length (32 ft) to connect the Helm to the Cylinder on the engine.

Verado Engines 200-300 HP- 135-200 HP (Power Steering and Mercury Hydraulic Steering) MCM Power Steering (879273A01/A02) 350 SCI

POWER STEERING HOSE KIT- POWER MODULE TO HELM



32-892438K02

Kit includes two hoses of same length (2 ft) to connect the Power Module to the Helm.
(Power Steering)

Verado Engines 200-350 HP- 135-200 HP (Power Steering and Mercury Hydraulic Steering)

32-892438K03

Kit includes two hoses of same length (3 ft) to connect the Power Module to the Helm. (Power Steering)

Verado Engines 200-350 HP- 135-200 HP (Power Steering and Mercury Hydraulic Steering)

32-892438K04

Kit includes two hoses of same length (4 ft) to connect the Power Module to the helm. (Power Steering)

Verado Engines 200-350 HP- 135-200 HP (Power Steering and Mercury Hydraulic Steering)

32-892438K05

Kit includes two hoses of same length (5 ft) to connect the Power Module to the Helm. (Power Steering)

Verado Engines 200-350 HP- 135-200 HP (Power Steering and Mercury Hydraulic Steering)

32-892438K06

Kit includes two hoses of same length (6 ft) to connect the Power Module to the Helm. (Power Steering)

Verado Engines 200-350 HP- 135-200 HP (Power Steering and Mercury Hydraulic Steering)

32-892438K07

Kit includes two hoses of same length (7 ft) to connect the Power Module to the Helm. (Power Steering)

Verado Engines 200-350 HP- 135-200 HP (Power Steering and Mercury Hydraulic Steering)

32-892438K08

Kit includes two hoses of same length (8 ft) to connect the Power Module to the Helm. (Power Steering)

Verado Engines 200-350 HP- 135-200 HP (Power Steering and Mercury Hydraulic Steering)

32-892438K10

Kit includes two hoses of same length (10 ft) to connect the Power Module to the Helm. (Power Steering)

Verado Engines 200-350 HP- 135-200 HP (Power Steering and Mercury Hydraulic Steering)

32-892438K12

Kit includes two hoses of same length (12 ft) to connect the Power Module to the Helm. (Power Steering)

Verado Engines 200-350 HP- 135-200 HP (Power Steering and Mercury Hydraulic Steering)

32-892438K14

Kit includes two hoses of same length (14 ft) to connect the Power Module to the Helm. (Power Steering)

Verado Engines 200-350 HP- 135-200 HP (Power Steering and Mercury Hydraulic Steering)

32-892438K16

Kit includes two hoses of same length (16 ft) to connect the Power Module to the Helm. (Power Steering)

Verado Engines 200-350 HP- 135-200 HP (Power Steering and Mercury Hydraulic Steering)

32-892438K18

Kit includes two hoses of same length (18 ft) to connect the Power Module to the Helm. (Power Steering)

Verado Engines 200-350 HP- 135-200 HP (Power Steering and Mercury Hydraulic Steering)

32-892438K20

Kit includes two hoses of same length (20 ft) to connect the Power Module to the Helm.. (Power Steering)

Verado Engines 200-350 HP- 135-200 HP (Power Steering and Mercury Hydraulic Steering)

32-892438K22

Kit includes two hoses of same length (22 ft) to connect the Power Module to the Helm. (Power Steering)

Verado Engines 200-350 HP- 135-200 HP (Power Steering and Mercury Hydraulic Steering)

32-892438K24

Kit includes two hoses of same length (24 ft) to connect the Power Module to the Helm. (Power Steering)

Verado Engines 200-350 HP- 135-200 HP (Power Steering and Mercury Hydraulic Steering)

HOSE- PRESSURE- DUAL STATION



32-892825008

Used to connect dual station/ Helm together (8 ft) Power Steering

Verado Engines - 135 to 300 HP Power Steering Can also be used for MCM PS System

32-892825010

Used to connect dual station/ Helm together (10 ft) Power Steering

Verado Engines - 135 to 300 HP Power Steering Can also be used for MCM PS System

32-892825012

Used to connect dual station/ Helm together (12 ft) Power Steering

Verado Engines - 135 to 300 HP Power Steering Can also be used for MCM PS System

32-892825014

Used to connect dual station/ Helm together (14 ft) Power Steering

Verado Engines - 135 to 300 HP Power Steering Can also be used for MCM PS System

32-892825016

Used to connect dual station/ Helm together (16 ft) Power Steering

Verado Engines - 135 to 300 HP Power Steering Can also be used for MCM PS System

32-892825018

Used to connect dual station/ Helm together (18 ft) Power Steering

Verado Engines - 135 to 300 HP Power Steering Can also be used for MCM PS System

32-892825020

Used to connect dual station/ Helm together (20 ft) Power Steering

Verado Engines - 135 to 300 HP Power Steering Can also be used for MCM PS System

32-892825022

Used to connect dual station/ Helm together (22 ft) Power Steering

Verado Engines - 135 to 300 HP Power Steering Can also be used for MCM PS System

32-892825024

Used to connect dual station/ Helm together (24 ft) Power Steering

Verado Engines - 135 to 300 HP Power Steering Can also be used for MCM PS System

32-892825026

Used to connect dual station/ Helm together (26 ft) Power Steering

Verado Engines - 135 to 300 HP Power Steering Can also be used for MCM PS System

POWER STEERING HOSE- DAMPENER



32-897643A01

Hose used to reduce noise of the power steering system

Multiple Engine 150 4 strokes and Optimax (No Single engines) , Verado 135-200 4 cylinder, 200-300 Verado 6 cylinder, 350 SCI

FITTING - BULKHEAD 3/4 IN. MALE TO MALE



22-892517

Fitting - Bulkhead 3/4 in. Male To Male.

Used to install a bulkhead installation 0 in. to 3/4 in Maximum wall thickness grip length- Power Steering.

FITTING- BULKHEAD 3 IN. MALE TO MALE



22-892518

Fitting- Bulkhead 3 in. - Male To Male
Power Steering Fittings.

Used to install bulkhead installations 3/4 in. to 3 in. maximum wall thickness grip length.

STRAIGHT FITTING 9/16 IN.



22-892519

Fitting- Straight 9/16 in. to Cylinder - 6 to 4.
Power Steering fittings.

Allows straight cylinder hose connections at Outboard Steering cylinder vs 90 degree (replaces 889552)

TEE FITTING MALE 9/16 IN.



22-892520

Tee Fitting Male 9/16 in. Power Steering Fitting- Allows Tee connection of the cylinder hose ends

Verado Engines - 135 to 300 HP Power Steering

TEE FITTING FEMALE 9/16 IN.



22-892521

Tee Fitting Female 9/16 in. Power Steering Fitting- Allows "T" connection of 2 cylinder hoses ends with cylinder of helm fittings

Verado Engines - 135 to 300 HP Power Steering

CAP MALE 9/16 IN.



22-892522

Cap Brass 9/16 in. Male. Power Steering Fitting- allows you to cap cylinder hoses for service

CAP MALE 11/16 IN.



22-892523

Cap Brass 11/16 in. Male. Power Steering Fitting- allows you to cap pressure hoses for service

CAP FEMALE 9/16 IN.



22-892524

Cap Brass 9/16 in. Female. Power Steering Fittings- allows you to cap cylinder:helm (right and left) fittings for service

Verado Engines - 135 to 300 HP Power Steering

CAP BRASS FEMALE 11/16 IN.



22-892525

Cap Brass Female 11/16 in. Power Steering Fittings- Allows you to cap helm for service

UNION FITTING MALE TO MALE 9/16 IN.



22-892526

Union Fitting Male to Male 9/16 in. Power Steering Fittings-- For connecting 2 cylinder hoses end to end

UNION FITTING MALE TO MALE 11/16 IN.



22-892527

Union Fitting Male to Male 11/16 in. Power Steering Fittings- to connect 2 pressure hoses end to end

ELBOW FITTING FEMALE 9/16 IN.



22-892528

Elbow Fitting Female to Male 9/16 in.. Power Steering Fittings to allow 90 degree connection at helm (R&L port)

Verado Engines - 135 to 300 HP Power Steering

FITTING KIT BULKHEAD



64-8M0088973

Improved bulkhead fitting kit with chrome housing for multiple hose installations.

Multiple Hose Installations for Compression style hoses.

ELBOW- FEMALE TO MALE 11/16 IN.



22-897726

Power Steering Fittings- To allow 90 degree connection at helm (R&L port)

Power Steering Fittings

POWER STEERING HOSE KITS-JOYSTICK PILOTING

JOYSTICK PILOTING STEERING HOSES

Image not Available.

32-8M0078210

Kit includes two hoses of the same length (10 ft) for use on Joystick Piloting. The hoses will route from the pump to the bulk head fitting.

Can be used on Verado 250-350 HP and 400R Joystick installations.

JOYSTICK PILOTING HOSES

32-8M0078211

Kit includes two hoses of the same length (12 ft) for use on Joystick Piloting. The hoses will route from the pump to the bulk head fitting.

Can be used on Verado 250-350 HP and 400R Joystick installations.

32-8M0078212

Kit includes two hoses of the same length (14 ft) for use on Joystick Piloting. The hoses will route from the pump to the bulk head fitting.

Can be used on Verado 250-350 HP and 400R Joystick installations.

32-8M0078213

Kit includes two hoses of the same length (16 ft) for use on Joystick Piloting. The hoses will route from the pump to the bulk head fitting.

Can be used on Verado 250-350 HP and 400R Joystick installations.

32-8M0078214

Kit includes two hoses of the same length (18 ft) for use on Joystick Piloting. The hoses will route from the pump to the bulk head fitting.

Can be used on Verado 250-350 HP and 400R Joystick installations.

32-8M0078215

Kit includes two hoses of the same length (20 ft) for use on Joystick Piloting. The hoses will route from the pump to the bulk head fitting.

Can be used on Verado 250-350 HP and 400R Joystick installations.

32-8M0078216

Kit includes two hoses of the same length (22 ft) for use on Joystick Piloting. The hoses will route from the pump to the bulk head fitting.

Can be used on Verado 250-350 HP and 400R Joystick installations.

32-8M0078217

Kit includes two hoses of the same length (24 ft) for use on Joystick Piloting. The hoses will route from the pump to the bulk head fitting.

Can be used on Verado 250-350 HP and 400R Joystick installations.

32-8M0032520

Kit includes two hoses of same length (26 ft) for use on Joystick Piloting. The hoses will route from the pump to the bulk head fitting.

Can be used on Verado 250-350 HP and 400R Joystick installations.

32-8M0032530

Kit includes two hoses of the same length (28 ft) for use on Joystick Piloting. The hoses will route from the pump to the bulk head fitting.

Can be used on Verado 250-350 HP and 400R Joystick installations.

32-8M0032547

Kit includes two hoses of the same length (30 ft) for use on Joystick Piloting. The hoses will route from the pump to the bulk head fitting.

Can be used on Verado 250-350 HP and 400R Joystick installations.

32-8M0032630

Kit includes two hoses of the same length (32 ft) for use on Joystick Piloting. The hoses will route from the pump to the bulk head fitting.

Can be used on Verado 250-350 HP and 400R Joystick installations.

TIE BAR KITS

HEAVY DUTY TIE BAR KIT- DUAL



8M0096314

Heavy Duty 26 inch Tie Bar allows two engines to be attached together +/- 1.25 inches.
Tie Bar has been engineered for higher horse power applications with improved retaining design.
26 +/- 1.25 inches

L6 Verado Gen 5 Engines

8M0096315

Heavy Duty 28 inch Tie Bar allows two engines to be attached together +/- 1.25 inches.
Tie Bar has been engineered for higher horse power applications with improved retaining design.
28 +/- 1.25 inches

L6 Verado Gen 5 Engines

8M0096316

Heavy Duty 30 inch Tie Bar allows two engines to be attached together +/- 1.25 inches.
Tie Bar has been engineered for higher horse power applications with improved retaining design.
30 +/- 1.25 inches

L6 Verado Gen 5 Engines

8M0096317

Heavy Duty 32 inch Tie Bar allows two engines to be attached together +/- 1.25 inches.
Tie Bar has been engineered for higher horse power applications with improved retaining design.
32 +/- 1.25 inches

L6 Verado Gen 5 Engines

8M0096319

Heavy Duty 34 inch Tie Bar allows two engines to be attached together +/- 1.25 inches.
Tie Bar has been engineered for higher horse power applications with improved retaining design.
34 +/- 1.25 inches

L6 Verado Gen 5 Engines

8M0097267

Heavy Duty 36 inch Tie Bar allows two engines to be attached together +/- 1.25 inches.
Tie Bar has been engineered for higher horse power applications with improved retaining design.
36 +/- 1.25 inches

L6 Verado Gen 5 Engines

HEAVY DUTY TIE BAR ADD AN ENGINE KIT



8M0096320

Add An Engine 26 inch Tie Bar allows triple and quad engines to be attached together +/- 1.25 inches.
Tie Bar has been engineered for higher horse power applications with improved heavy duty design.
26 +/- 1.25 inches

L6 Verado Gen 5 Engines

8M0096321

Add An Engine 28 inch Tie Bar allows triple and quad engines to be attached together +/- 1.25 inches.
Tie Bar has been engineered for higher horse power applications with improved heavy duty design.
28 +/- 1.25 inches

L6 Verado Gen 5 Engines

8M0096322

Add An Engine 30 inch Tie Bar allows triple and quad engines to be attached together +/- 1.25 inches.
Tie Bar has been engineered for higher horse power applications with improved heavy duty design.
30 +/- 1.25 inches

L6 Verado Gen 5 Engines

8M0096323

Add An Engine 32 inch Tie Bar allows triple and quad engines to be attached together +/- 1.25 inches.
Tie Bar has been engineered for higher horse power applications with improved heavy duty design.
32 +/- 1.25 inches

L6 Verado Gen 5 Engines

8M0096324

Add An Engine 34 inch Tie Bar allows triple and quad engines to be attached together +/- 1.25 inches.
Tie Bar has been engineered for higher horse power applications with improved heavy duty design.
34 +/- 1.25 inches

L6 Verado Gen 5 Engines

8M0097268

Add An Engine 36 inch Tie Bar allows triple and quad engines to be attached together +/- 1.25 inches.
Tie Bar has been engineered for higher horse power applications with improved heavy duty design.
36 +/- 1.25 inches

L6 Verado Gen 5 Engines

TIE BAR KIT- DUAL



8M0088751

Allows two engines to be attached together 26" to 28 "
New Tie Bar has added plating for improved protection and new retaining design
Now comes in 2 inch increments

Verado Engines 200-300 HP and 350 SCI (5 inch maximum vertical offset between engines)

8M0088752

Allows two engines to be attached together 28" to 30 "
New Tie Bar has added plating for improved protection and new retaining design
Now comes in 2 inch increments

Verado Engines 200-300 HP and 350 SCI (5 inch maximum vertical offset between engines)

8M0088753

Allows two engines to be attached together 30" to 32 "
New Tie Bar has added plating for improved protection and new retaining design
Now comes in 2 inch increments

Verado Engines 200-300 HP and 350 SCI (5 inch maximum vertical offset between engines)

8M0088754

Allows two engines to be attached together 32" to 34 "
New Tie Bar has added plating for improved protection and new retaining design
Now comes in 2 inch increments

Verado Engines 200-300 HP and 350 SCI (5 inch maximum vertical offset between engines)

8M0088755

Allows two engines to be attached together 34" to 36 "
New Tie Bar has added plating for improved protection and new retaining design
Now comes in 2 inch increments

Verado Engines 200-300 HP and 350 SCI (5 inch maximum vertical offset between engines)

TIE BAR- ADD-AN-ENGINE KIT



8M0088756

Allows the attachment of additional engines. Must order Dual engine kit plus one additional kit for each engine. (26 in. to 28 in.)
New Tie Bar has added plating for improved protection and new retaining design
Now comes in 2 inch increments

Verado Engines 200-300 HP and 350 SCI (5 inch maximum vertical offset between engines)

8M0088757

Allows the attachment of additional engines. Must order Dual engine kit plus one additional kit for each engine. (28 in. to 30 in.)
New Tie Bar has added plating for improved protection and new retaining design
Now comes in 2 inch increments

Verado Engines 200-300 HP and 350 SCI (5 inch maximum vertical offset between engines)

8M0088758

Allows the attachment of additional engines. Must order Dual engine kit plus one additional kit for each engine. (30 in. to 32 in.)
New Tie Bar has added plating for improved protection and new retaining design
Now comes in 2 inch increments

Verado Engines 200-300 HP and 350 SCI (5 inch maximum vertical offset between engines)

899160A02

Allows the attachment of additional engines. Must order Dual engine kit plus one additional kit for each engine. (32" to 34 ")
New Tie Bar has added plating for improved protection and new retaining design
Now comes in 2 inch increments

Verado Engines 200-300 HP and 350 SCI (5 inch maximum vertical offset between engines)

8M0088761

Allows the attachment of additional engines. Must order Dual engine kit plus one additional kit for each engine. (34 in. to 36 in.)
New Tie Bar has added plating for improved protection and new retaining design
Now comes in 2 inch increments

Verado Engines 200-300 HP and 350 SCI (5 inch maximum vertical offset between engines)

TIE BAR- SINGLE CYLINDER DUAL ENGINE



64-8M0063473

This tie bar can be used on a dual installation with just one cylinder. 26 inch length
75-115 HP EFI 4 Stroke OB (s/n 1B366823 & above), 150 4 Stroke, 135-200 4 cylinder Verado and Opti Max . Use only with Mercury cylinders for dual engine applications

64-8M0063474

This tie bar can be used on a dual installation with just one cylinder. 28 inch length
75-115 HP EFI 4 Stroke OB (s/n 1B366823 & above), 150 4 Stroke, 135-200 4 cylinder Verado and Opti Max . Use only with Mercury cylinders for dual engine applications

64-8M0063475

This tie bar can be used on a dual installation with just one cylinder. 30 inch length 75-115 HP EFI 4 Stroke OB (s/n 1B366823 & above), 150 4 Stroke, 135-200 4 cylinder Verado and Opti Max . Use only with Mercury cylinders for dual engine applications

64-8M0063476

This tie bar can be used on a dual installation with just one cylinder. 32 inch length 75-115 HP EFI 4 Stroke OB (s/n 1B366823 & above), 150 4 Stroke, 135-200 4 cylinder Verado and Opti Max . Use only with Mercury cylinders for dual engine applications

64-8M0063477

This tie bar can be used on a dual installation with just one cylinder. 34 inch length 75-115 HP EFI 4 Stroke OB (s/n 1B366823 and above), 150 4 Stroke, 135-200 4 cylinder Verado and Opti Max . Use only with Mercury cylinders for dual engine applications

TIE BARS - DUAL ENGINES



64-892789Q22

26 Inches long
Outboard centerline spacing of 66.0 cm (26 in.)

For use with the 75-115 hp EFI FourStroke outboard (s/n 1B366823 & above) and the 135-200 Verado- V6 OptiMax- Up to 600 HP dual Install with one Counter Rotation Engine Also used on multiple 150 4 strokes

64-892789Q23

28 Inches long
Outboard centerline spacing of 71.1 cm (28 in.)

For use with the 75-115 hp EFI FourStroke outboard (s/n 1B366823 & above) and the 135-200 Verado- V6 OptiMax- Up to 600 HP dual Install with one Counter Rotation Engine. Also used on multiple 150 4 strokes

64-892789Q25

30 Inches long
Outboard centerline spacing of 76.2 cm (30 in.)

For use with the 75-115 hp EFI FourStroke outboard (s/n 1B366823 & above) and the 135-200 Verado- V6 OptiMax- Up to 600 HP dual Install with one Counter Rotation Engine. Also used on multiple 150 4 strokes

64-892789Q26

32 Inches long
Outboard centerline spacing of 81.3 cm (32 in.)

For use with the 75-115 hp EFI FourStroke outboard (s/n 1B366823 & above) and the 135-200 Verado- V6 OptiMax- Up to 600 HP dual Install with one Counter Rotation Engine. Also used on multiple 150 4 strokes

64-892789Q27

34 Inches long
Outboard centerline spacing of 86.4 cm (34 in.)

For use with the 75-115 hp EFI FourStroke outboard (s/n 1B366823 & above) and the 135-200 Verado- V6 OptiMax- Up to 600 HP dual Install with one Counter Rotation Engine. Also used on multiple 150 4 strokes

64-892789Q24

36 Inches long
Outboard centerline spacing of 91.5 cm (36 in.)

For use with the 75-115 hp EFI FourStroke outboard (s/n 1B366823 & above) and the 135-200 Verado- V6 OptiMax- Up to 600 HP dual Install with one Counter Rotation Engine. Also used on multiple 150 4 strokes

TIE BARS - TRIPLE ENGINES

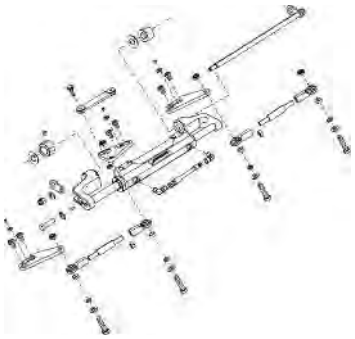

892789Q32

26 Inches long
Outboard centerline spacing of 66.0 cm (26 in.)

OptiMax Multiple Engines
135-200 Verado L4 Also used on multiple 150 4 strokes

892789Q33

28 Inches long
Outboard centerline spacing of 71.1 cm (28 in.)

OptiMax Multiple Engines
135-200 Verado L4 Also used on multiple 150 4 strokes

892789Q34

30 Inches long
Outboard centerline spacing of 71.1 cm (28 in.)

OptiMax Multiple Engines
135-200 Verado L4 Also used on multiple 150 4 strokes

VERADO KICKER ELECTRICAL KIT



8M0098553

Battery isolated system that allows you to run your kicker engine and use the Power Steering system without you primary engine running. This system allows you to connect to a deep cell battery (not your starter battery) and the system will provide normal power steering from the wheel. The system will alert you when your auxiliary battery is below 9.5 volts. This signal means that you must start your primary engine to change the battery system. This kit will save the starting battery for primary starting use only. Gen 5 Verado application only

Verado Power Steering systems with a kicker engine 200-300 Verado 2005 and newer

LIQUID TIE BAR KIT



893396A02

Sequence valve for use with dual engines mounted more than 34 " apart. With additional steering cylinder with wide dual engines , steering cylinders are connected in series . Valve allows for alignment / re-alignment. Add 896500a01 additional cylinder on counter rotation engines. (Verado 200-350 HP)

2005 and newer Verado Engines 135-350 HP, and can also be used with the 75-115 EFI FourStroke outboard (s/n 1B366823 & above).

BRACKET- TIE BAR (WITH BOSSES)



892367T03

Bracket that allows you to install the magnet on the Rudder Feedback Kit (898399K01).
Bracket with bosses needed to mount the magnet

Verado 200-300 HP engines.

TIE BAR KIT - PORT MOUNTED KICKER



898370A03

Tie bar for Manual Hydraulic Steering System to attach primary engine to kicker engine. Engine will be mounted on the Port side of the primary engine

Verado 135-200 HP as well as Mercury's bolt-on steering system for Opti max and 75-115 4 strokes

TIE BAR KIT - STARBOARD MOUNTED KICKER



898966A02

Tie bar for Manual Hydraulic Steering System to attach primary engine to kicker engine. Engine will be mounted on the Starboard side of the primary engine

Verado 135-200 HP as well as Mercury's bolt-on steering system for Opti max and 75-115 4 strokes

DRIVE BRACKET ONLY



67-892763A15

Heavy duty stainless steel bracket.
Bracket used on Panther Model 55-2700
Panther Model 55-2750

BRACKET-KICKER ENGINE ATTACHMENT



892822A02

Unique bracket used to hook up a kicker engine with Verado. Special bracket is attached to Verado engine to allow attachments.

2005 Verado Engines 200-300 HP

KICKER ENGINE BRACKET

8M0097850

Bracket is used to mount a kicker engine with a Verado engine.

Bracket is used on Gen 5 Verado engines

TROLLING MOTOR TIE BAR KIT WITHOUT DRIVE UNIT



67-892763A24

Heavy duty auxiliary steering kit connects an auxiliary trolling motor to your main motor. It is 1/2 inch thick. Ideal for large Walleye/ Great Lakes boats with rough water running conditions

Panther Model 55-2700

TROLLING MOTOR TIE BAR KIT



67-892763A14

Heavy duty auxiliary steering kit connects an auxiliary trolling motor to your main motor. It is 1/2 inch thick. Drive bracket is 100% stainless steel. Ideal for large Walleye/ Great Lakes boats with rough water running conditions

Panther Model 55-2700

VERADO KICKER ELECTRICAL KIT



897478K01

Battery isolated system that allows you to run your kicker engine and use the Power Steering system without you primary engine running. This system allows you to connect to a deep cell battery (not your starter battery) and the system will provide normal power steering from the wheel. The system will alert you when your auxiliary battery is below 9.5 volts. This signal means that you must start your primary engine to change the battery system. This kit will save the starting battery for primary starting use only. Gen 4 Verado and older application only.

Verado Power Steering systems with a kicker engine 200-300 Verado 2005 and newer

VERADO KICKER ELECTRICAL KIT



897478K02

Battery isolated system that allows you to run your kicker engine and use the Power Steering system without you primary engine running. This system allows you to connect to a deep cell battery (not your starter battery) and the system will provide normal power steering from the wheel. The system will alert you when your auxiliary battery is below 9.5 volts. This signal means that you must start your primary engine to change the battery system. This kit will save the starting battery for primary starting use only.

Verado Power Steering systems with a kicker engine 135-200 Verado

HYDRAULIC STEERING - BASIC AND HEAVY DUTY SYSTEMS

Both the Basic and the Heavy Duty Hydraulic Systems in this section will use the hoses listed. (8M0053474 to 8M0053492) Note that the Basic is for single engines only - 150 HP and below. The Heavy Duty systems are for single engines above 150 HP as well as multiple engines. Fittings are listed in this section that can be installed to the compression style connections.

CYLINDER - HYDRAULIC - STANDARD



8M0054993

This Basic hydraulic cylinder has the same robust performance design requirement as our heavy duty cylinder. It is qualified to the same 300,000 cycle as our other steering systems, has high strength fasteners, stainless steel arm, heavy duty triple seal cartridges for enhanced duribilty and longevity high quality fittings using swaged compression style hose connections.

All Single Outboard - 150 HP and below
(1.5L Opti engine requires the special arm - cylinder 8M0056619)

CYLINDER - HYDRAULIC - STANDARD



8M0056619

This Basic hydraulic cylinder has the same robust performance design requirement as our heavy duty cylinder. It is qualified to the same 300,000 cycle as our other steering systems, has high strength fasteners, stainless steel arm, with a special bend for clearance, heavy duty triple seal cartridges for enhanced duribilty and longevity. High quality fittings using swaged compression style hose connections.

Mercury OB - 1.5L OptiMax

HYDRAULIC HELM - BASIC SYSTEM



8M0050098

This hydraulic helm is a std 20 CC / 1.2 Cu Inch helm with compression style fittings. It is used with the 8M0054993 Basic cylinder. The shaft is anodized steel with a composite tank. The pressure relief is 1000 PSI for high torque applicactions for improved performance. (5.2 Lock to lock wheel turns).

Single engine 75-150 HP (includes new 150 HP 4 Stroke)

HYDRAULIC HELM - BASIC SYSTEM



8M0050099

This hydraulic helm is a Tilt 20 CC / 1.2 Cu Inch helm with compression style fittings. It is used with the 8M0054993 Basic cylinder. The shaft is anodized steel with a composite tank. The pressure relief is 1000 PSI for high torque applicactions for improved performance. (5.2 Lock to lock wheel turns).

Single engine 75-150 HP OB (Includes new 150 HP 4 stroke)

HYDRAULIC HELM AND CYLINDER- SMALL- STD W-O HOSES



8M0077699

This kit includes a small cylinder and a new 1.4 Cubic Inch Standard Helm. They do not come with hoses but you will need to order Compression Style fitting hoses 8M0053474 thru 8M0053491 hose kits (1000 PSI relief)

Used on any brand Single Engine Outboard 150 HP and below

HYDRAULIC HELM AND CYLINDER- SMALL- TILT W-O HOSES



8M0077701

This kit includes a small cylinder and a new 1.4 Cubic Inch Tilt Helm. They do not come with hoses but you will need to order Compression Style fitting hoses 8M0053474 thru 8M0053491 hose kits (1000 PSI relief)

Used on any brand Single Engine Outboard 150 HP and below

HYDRAULIC HELM AND CYLINDER- LARGE- STD W-O HOSES



8M0077703

This kit includes a large cylinder and a new 1.4 Cubic Inch Standard Helm. They do not come with hoses but you will need to order Compression Style fitting hoses 8M0053474 thru 8M0053491 hose kits (1000 PSI relief)

Used on any brand Single Engine Outboard 300 HP and below (Verado 6 cylinder engines excluded)

HYDRAULIC HELM AND CYLINDER- TILT - STD W-O HOSES



8M0077705

This kit includes a large cylinder and a new 1.4 Cubic Inch Tilt Helm. They do not come with hoses but you will need to order Compression Style fitting hoses 8M0053474 thru 8M0053491 hose kits (1000 PSI relief)

Used on any brand Single Engine Outboard 300 HP and below (Verado 6 cylinder engines excluded)

CYLINDER WITH COMPRESSION STYLE FITTINGS



8M0050097

Heavy Duty Hydraulic standard cylinder that uses compression hoses 8M0053474 - 8M005053491. This cylinder is tested to Mercury's rigid standards that include higher loads and cycle testing to 300,000 cycles. It includes machined, high strength fasteners, electro polished SS arm, and heavy duty triple seal cartridges for enhanced duribility and longevity

135-300 HP OPTI Max Outboards and 4 Cylinder Verado (Hydraulic only) Use on single, dual and triple installations

CYLINDER WITH COMPRESSION STYLE FITTINGS-PORT



8M0056145

Heavy Duty Hydraulic cylinder counter rotation that uses compression hoses 8M0053474 - 8M005053491. This cylinder is tested to Mercury's rigid standards that include higher loads and cycle testing to 300,000 cycles. It includes machined, high strength fasteners, electro polished SS arm, and heavy duty triple seal cartridges for enhanced duribility and longevity

135-300 HP OPTI Max Outboards and 4 Cylinder Verado (Hydraulic only) Use on dual and triple installations (Counter rotation)

HYDRAULIC HELM PUMP - COMPRESSION STYLE FITTINGS



8M0056139

Front Mount Standard helm - 1.5 cu in (25 CC.) displacement. Approximately 5 turns lock to lock on singles (Use Compression style fittings and hoses)
and 8 on dual cylinders
Compact design
Built-in valve for positive rudder lock
Integral relief valve for over pressure protection- 1500 PSI

Use with cylinder 8M0050097 and hoses 8M0053474 thru 8M0053492. Use on single or multiple OptiMax powered boats. Use on Verado 4 cylinder Hydraulic steering installation.

8M0056140

Front Mount Tilt helm - 1.5 cu in (25 CC.) displacement. Approximately 5 turns lock to lock on singles
and 8 on dual cylinders
Compact design
Built-in valve for positive rudder lock
Integral relief valve for over pressure protection - 1500 PSI (Use Compression style fittings and hoses)

Use with cylinder 8M0050097 and hoses 8M0053474 thru 8M0053492. Use on single or multiple OptiMax powered boats. Use on Verado 4 cylinder Hydraulic steering installation.

8M0056141

Front Mount Standard helm - 2.0 cu in (33CC.) displacement. Approximately 4.7 turns lock to lock on singles
and 7.3 on dual cylinders
Compact design
Built-in valve for positive rudder lock
Integral relief valve for over pressure protection - 1500 PSI (Use Compression style fittings and hoses)

Use with cylinder 8M0050097 and hoses 8M0053474 thru 8M0053492. Use on single or multiple OptiMax powered boats. Use on Verado 4 cylinder Hydraulic steering installation.

8M0056142

Front Mount Tilt helm - 2.0 cu in (33 CC.) displacement. Approximately 4.7 turns lock to lock on singles
and 7.3 on dual cylinders
Compact design
Built-in valve for positive rudder lock
Integral relief valve for over pressure protection - 1500 PSI (Use Compression style fittings and hoses)

Use with cylinder 8M0050097 and hoses 8M0053474 thru 8M0053492. Use on single or multiple OptiMax powered boats. Use on Verado 4 cylinder Hydraulic steering installation.

HYDRAULIC HELM PUMP -Q/S



8M0056143

Front Mount 2.4 cu in (39 CC) displacement. Approximately 3 turns lock to lock on singles (Use Compression style fittings and hoses)
and 6.5 on dual cylinders
Compact design
Built-in valve for positive rudder lock
Integral relief valve for over pressure protection

Hydraulic Steering for Verado 135 to 175-4 stroke engines
Also can be used on OptiMax with Mercury hydraulic cylinder and hoses. Also can be used on OptiMax with Mercury hydraulic cylinder and hoses Also can be used on 75-115 4 stroke and 1.5L opti 75-115 HP
Use cylinder 8M0050097 for Std and 8M0056145 for counter for multiple engine installs. Hose series is 8M0053474 thru 8M0053492

HYDRAULIC HELM PUMP -Q/S-TILT



8M0056144

Front Mount 2.4 cu in (39 CC) displacement. Approximately 3 turns lock to lock on singles (Use Compression style fittings and hoses)
and 6.5 on dual cylinders
Compact design
Tilt Range of 48 Deg and 5 locking positions
Built-in valve for positive rudder lock
Integral relief valve for over pressure protection

Hydraulic Steering for Verado 135 to 175-4 stroke engines
Also can be used on OptiMax with Mercury hydraulic cylinder and hoses. Also can be used on OptiMax with Mercury hydraulic cylinder and hoses Also can be used on 75-115 4 stroke and 1.5L opti 75-115 HP
Use cylinder 8M0050097 for Std and 8M0056145 for counter for multiple engine installs. Hose series is 8M0053474 thru 8M0053492

HYDRAULIC STEERING KIT -Q/S



8M0073922

Quicksilver 1.5 cu in displacemen Std Helm kit with Cylinder and Hoses. (14 ft) Approximately 5 turns lock to lock on a single engine

Hydraulic Steering - 75 HP engines and above (Use with Comptression type hoses 8M0053473 thru 8M0053449)

8M0073923

Quicksilver 1.5 cu in displacemen Std Helm kit with Cylinder and Hoses. (16 ft) Approximately 5 turns lock to lock on a single engine

Hydraulic Steering - 75 HP engines and above (Use with Comptression type hoses 8M0053473 thru 8M0053449)

8M0073924

Quicksilver 1.5 cu in displacemen Std Helm kit with Cylinder and Hoses. (18 ft) Approximately 5 turns lock to lock on a single engine

Hydraulic Steering - 75 HP engines and above (Use with Comptression type hoses 8M0053473 thru 8M0053449)

8M0073925

Quicksilver 1.5 cu in displacemen Std Helm kit with Cylinder and Hoses. (20 ft) Approximately 5 turns lock to lock on a single engine

Hydraulic Steering - 75 HP engines and above (Use with Comptression type hoses 8M0053473 thru 8M0053449)

8M0073927

Quicksilver 1.5 cu in displacemen Std Helm kit with Cylinder and Hoses. (22 ft) Approximately 5 turns lock to lock on a single engine

Hydraulic Steering - 75 HP engines and above (Use with Comptression type hoses 8M0053473 thru 8M0053449)

8M0073928

Quicksilver 1.5 cu in displacemen Std Helm kit with Cylinder and Hoses. (24 ft) Approximately 5 turns lock to lock on a single engine

Hydraulic Steering - 75 HP engines and above (Use with Comptression type hoses 8M0053473 thru 8M0053449)

HYDRAULIC HOSE - COMPRESSION STYLE FITTINGS



32-8M0053474

New high strength 1500 PSI hose with compression type fittings. Fittings are made of brass with a nickel plating for extra corrision resistance. (2 ft)

Used with 8M0054993/8M0056619 "Basic" Cylindersas well as the 8M0050097/8M0054145 "Heavy Duty" systems, Also match to helms 8M0050098/8M0050099 and 8M0056139 thru 8M0056144

32-8M0053475

New high strength 1500 PSI hose with compression type fittings. Fittings are made of brass with a nickel plating for extra corrision resistance. (3 ft)

Used with 8M0054993/8M0056619 Basic Cylinders as well as the 8M0050097/8M0054145 Heavy Duty systems, Also match to helms 8M0050098/8M0050099 and 8M0056139 thru 8M0056144

32-8M0053476

New high strength 1500 PSI hose with compression type fittings. Fittings are made of brass with a nickel plating for extra corrision resistance. (4 ft)

Used with 8M0054993/8M0056619 Basic Cylinders as well as the 8M0050097/8M0054145 Heavy Duty systems, Also match to helms 8M0050098/8M0050099 and 8M0056139 thru 8M0056144

32-8M0053477

New high strength 1500 PSI hose with compression type fittings. Fittings are made of brass with a nickel plating for extra corrision resistance. (5 ft)

Used with 8M0054993/8M0056619 Basic Cylinders as well as the 8M0050097/8M0054145 Heavy Duty systems, Also match to helms 8M0050098/8M0050099 and 8M0056139 thru 8M0056144

32-8M0053478

New high strength 1500 PSI hose with compression type fittings. Fittings are made of brass with a nickel plating for extra corrision resistance. (6 ft)

Used with 8M0054993/8M0056619 Basic Cylinders as well as the 8M0050097/8M0054145 Heavy Duty systems, Also match to helms 8M0050098/8M0050099 and 8M0056139 thru 8M0056144

32-8M0053479

New high strength 1500 PSI hose with compression type fittings. Fittings are made of brass with a nickel plating for extra corrision resistance. (7 ft)

Used with 8M0054993/8M0056619 Basic Cylinders as well as the 8M0050097/8M0054145 Heavy Duty systems, Also match to helms 8M0050098/8M0050099 and 8M0056139 thru 8M0056144

32-8M0053480

New high strength 1500 PSI hose with compression type fittings. Fittings are made of brass with a nickel plating for extra corrision resistance. (8 ft)

Used with 8M0054993/8M0056619 Basic Cylinders as well as the 8M0050097/8M0054145 Heavy Duty systems, Also match to helms 8M0050098/8M0050099 and 8M0056139 thru 8M0056144

32-8M0053481

New high strength 1500 PSI hose with compression type fittings. Fittings are made of brass with a nickel plating for extra corrision resistance. (10 ft)

Used with 8M0054993/8M0056619 Basic Cylinders as well as the 8M0050097/8M0054145 Heavy Duty systems, Also match to helms 8M0050098/8M0050099 and 8M0056139 thru 8M0056144

32-8M0053482

New high strength 1500 PSI hose with compression type fittings. Fittings are made of brass with a nickel plating for extra corrision resistance. (12 ft)

Used with 8M0054993/8M0056619 Basic Cylinders as well as the 8M0050097/8M0054145 Heavy Duty systems, Also match to helms 8M0050098/8M0050099 and 8M0056139 thru 8M0056144

32-8M0053483

New high strength 1500 PSI hose with compression type fittings. Fittings are made of brass with a nickel plating for extra corrision resistance. (14 ft)

Used with 8M0054993/8M0056619 Basic Cylinders as well as the 8M0050097/8M0054145 Heavy Duty systems, Also match to helms 8M0050098/8M0050099 and 8M0056139 thru 8M0056144

32-8M0053484

New high strength 1500 PSI hose with compression type fittings. Fittings are made of brass with a nickel plating for extra corrision resistance. (16 ft)

Used with 8M0054993/8M0056619 Basic Cylinders as well as the 8M0050097/8M0054145 Heavy Duty systems, Also match to helms 8M0050098/8M0050099 and 8M0056139 thru 8M0056144

32-8M0053485

New high strength 1500 PSI hose with compression type fittings. Fittings are made of brass with a nickel plating for extra corrision resistance. (18 ft)

Used with 8M0054993/8M0056619 Basic Cylinders as well as the 8M0050097/8M0054145 Heavy Duty systems, Also match to helms 8M0050098/8M0050099 and 8M0056139 thru 8M0056144

32-8M0053486

New high strength 1500 PSI hose with compression type fittings. Fittings are made of brass with a nickel plating for extra corrision resistance. (20 ft)

Used with 8M0054993/8M0056619 Basic Cylinders as well as the 8M0050097/8M0054145 Heavy Duty systems, Also match to helms 8M0050098/8M0050099 and 8M0056139 thru 8M0056144

32-8M0053487

New high strength 1500 PSI hose with compression type fittings. Fittings are made of brass with a nickel plating for extra corrision resistance. (22 ft)

Used with 8M0054993/8M0056619 Basic Cylinders as well as the 8M0050097/8M0054145 Heavy Duty systems, Also match to helms 8M0050098/8M0050099 and 8M0056139 thru 8M0056144

32-8M0053488

New high strength 1500 PSI hose with compression type fittings. Fittings are made of brass with a nickel plating for extra corrision resistance. (24 ft)

Used with 8M0054993/8M0056619 Basic Cylinders as well as the 8M0050097/8M0054145 Heavy Duty systems, Also match to helms 8M0050098/8M0050099 and 8M0056139 thru 8M0056144

32-8M0053489

New high strength 1500 PSI hose with compression type fittings. Fittings are made of brass with a nickel plating for extra corrision resistance. (26 ft)

Used with 8M0054993/8M0056619 Basic Cylinders as well as the 8M0050097/8M0054145 Heavy Duty systems, Also match to helms 8M0050098/8M0050099 and 8M0056139 thru 8M0056144

32-8M0053490

New high strength 1500 PSI hose with compression type fittings. Fittings are made of brass with a nickel plating for extra corrision resistance. (28 ft)

Used with 8M0054993/8M0056619 Basic Cylinders as well as the 8M0050097/8M0054145 Heavy Duty systems, Also match to helms 8M0050098/8M0050099 and 8M0056139 thru 8M0056144

32-8M0053491

New high strength 1500 PSI hose with compression type fittings. Fittings are made of brass with a nickel plating for extra corrision resistance. (30 ft)

Used with 8M0054993/8M0056619 Basic Cylinders as well as the 8M0050097/8M0054145 Heavy Duty systems, Also match to helms 8M0050098/8M0050099 and 8M0056139 thru 8M0056144

32-8M0053492

New high strength 1500 PSI hose with compression type fittings. Fittings are made of brass with a nickel plating for extra corrision resistance. (32 ft)

Used with 8M0054993/8M0056619 Basic Cylinders as well as the 8M0050097/8M0054145 Heavy Duty systems, Also match to helms 8M0050098/8M0050099 and 8M0056139 thru 8M0056144

VENTED HELM CAP-VCAP



64-891667Q01

VCAP Vented helm cap for use on Q/S helms 891665Q02 and 891666Q01

NON VENTED CAP



19-898432

Required for dual station installations-

REMOTE FILL KIT FOR HYDRAULIC STEERING



64-889934A05

Remote fill adapter for rear mount and tilt mount Hydraulic pumps

Hydraulic Steering for Verado 135 to 200-4 stroke engines
Also can be used on OptiMax with Mercury hydraulic cylinder and hoses

HYDRAULIC STEERING ARM



898082A03

This arm attaches the cylinder to the engine for 1.5L OptiMax engines. Remove existing arm on 898349A01 cylinder and replace it with this arm for proper clearances

1.5L OptiMax engines

VENTED HELM CAP-VCAP



64-891667Q01

VCAP Vented helm cap for use on Q/S helms 891665Q02 and 891666Q01

X52- TILT MECHANISM



64-889934A04

X52 Tilt- Used with T81 FC, T83 FC helms

ADAPTER FOR POWER PURGE



64-889934A06

Adapter for the Power Puge system

Hydraulic Steering for Verado 135 to 200-4 stroke engines
Also can be used on OptiMax with Mercury hydraulic cylinder and hoses

TIE BAR- SINGLE CYLINDER DUAL ENGINE



64-8M0063473

This tie bar can be used on a dual installation with just one cylinder. 26 inch length 75-115 HP EFI 4 Stroke OB (s/n 1B366823 & above), 150 4 Stroke, 135-200 4 cylinder Verado and Opti Max . Use only with Mercury cylinders for dual engine applications

64-8M0063474

This tie bar can be used on a dual installation with just one cylinder. 28 inch length 75-115 HP EFI 4 Stroke OB (s/n 1B366823 & above), 150 4 Stroke, 135-200 4 cylinder Verado and Opti Max . Use only with Mercury cylinders for dual engine applications

64-8M0063475

This tie bar can be used on a dual installation with just one cylinder. 30 inch length 75-115 HP EFI 4 Stroke OB (s/n 1B366823 & above), 150 4 Stroke, 135-200 4 cylinder Verado and Opti Max . Use only with Mercury cylinders for dual engine applications

64-8M0063476

This tie bar can be used on a dual installation with just one cylinder. 32 inch length 75-115 HP EFI 4 Stroke OB (s/n 1B366823 & above), 150 4 Stroke, 135-200 4 cylinder Verado and Opti Max . Use only with Mercury cylinders for dual engine applications

64-8M0063477

This tie bar can be used on a dual installation with just one cylinder. 34 inch length 75-115 HP EFI 4 Stroke OB (s/n 1B366823 and above), 150 4 Stroke, 135-200 4 cylinder Verado and Opti Max . Use only with Mercury cylinders for dual engine applications

TIE BARS - DUAL ENGINES



64-892789Q22

26 Inches long
Outboard centerline spacing of 66.0 cm (26 in.)

For use with the 75-115 hp EFI FourStroke outboard (s/n 1B366823 & above) and the 135-200 Verado- V6 OptiMax- Up to 600 HP dual Install with one Counter Rotation Engine Also used on multiple 150 4 strokes

64-892789Q23

28 Inches long
Outboard centerline spacing of 71.1 cm (28 in.)

For use with the 75-115 hp EFI FourStroke outboard (s/n 1B366823 & above) and the 135-200 Verado- V6 OptiMax- Up to 600 HP dual Install with one Counter Rotation Engine. Also used on multiple 150 4 strokes

64-892789Q25

30 Inches long
Outboard centerline spacing of 76.2 cm (30 in.)

For use with the 75-115 hp EFI FourStroke outboard (s/n 1B366823 & above) and the 135-200 Verado- V6 OptiMax- Up to 600 HP dual Install with one Counter Rotation Engine. Also used on multiple 150 4 strokes

64-892789Q26

32 Inches long
Outboard centerline spacing of 81.3 cm (32 in.)

For use with the 75-115 hp EFI FourStroke outboard (s/n 1B366823 & above) and the 135-200 Verado- V6 OptiMax- Up to 600 HP dual Install with one Counter Rotation Engine. Also used on multiple 150 4 strokes

64-892789Q27

34 Inches long
Outboard centerline spacing of 86.4 cm (34 in.)

For use with the 75-115 hp EFI FourStroke outboard (s/n 1B366823 & above) and the 135-200 Verado- V6 OptiMax- Up to 600 HP dual Install with one Counter Rotation Engine. Also used on multiple 150 4 strokes

64-892789Q24

36 Inches long
Outboard centerline spacing of 91.5 cm (36 in.)

For use with the 75-115 hp EFI FourStroke outboard (s/n 1B366823 & above) and the 135-200 Verado- V6 OptiMax- Up to 600 HP dual Install with one Counter Rotation Engine. Also used on multiple 150 4 strokes

TIE BARS - TRIPLE ENGINES

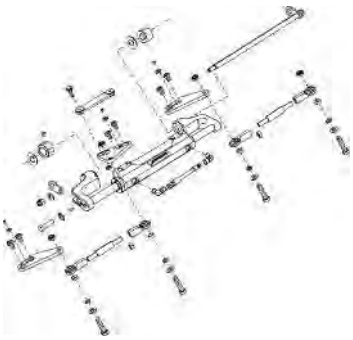

892789Q32

26 Inches long
Outboard centerline spacing of 66.0 cm (26 in.)

OptiMax Multiple Engines
135-200 Verado L4 Also used on multiple 150 4 strokes

892789Q33

28 Inches long
Outboard centerline spacing of 71.1 cm (28 in.)
OptiMax Multiple Engines
135-200 Verado L4 Also used on multiple 150 4 strokes

892789Q34

30 Inches long
Outboard centerline spacing of 71.1 cm (28 in.)
OptiMax Multiple Engines
135-200 Verado L4 Also used on multiple 150 4 strokes

FITTING - 90 DEGREE



22-8M6000760

90 degree fitting used with compression style hydraulic sytems (1/4 - 18 NPT to 3/8 compression)
Hydraulic Compression Steering systems

FITTING - TEE



22-8M6000771

Tee fitting used with compression style hydraulic sytem. (3/8 compression)
Hydraulic Compression Steering systems

FITTING - 1/4-18 NPTF TO 3/8 COMPRESSION



22-8M6000772

Fitting used with compression style hydraulic sytems (1/4 - 18 NPTF to 3/8 compression)
Hydraulic Compression Steering systems

BULKHEAD FITTING - COMPRESSION STYLE



22-8M6001381

Bulkhead fitting for Compression style Hydraulic Steering Systems
.375 x 2.50 inch
Compression Style Hydraulic Systems

FITTING-TEE BLEEDER 3/8 COMP X 6 ORFS



22-8M0041173

Tee fitting used on the compression style cylinders (1500 PSI)
8M0050097 and 8M0054993 cylinders

FITTING BULKHEAD 3 INCH



22-8M0055326

Bulkhead fitting used with compression style steering hoses (.375 inch compression X 3 inch LG)
Hydraulic Compression Steering Systems

FITTING KIT BULKHEAD



64-8M0088973

Improved bulkhead fitting kit with chrome housing for multiple hose installations.
Multiple Hose Installations for Compression style hoses.

FITTING - TEE



22-8M6001390

Used with Compression style hydraulic systems.
Tee - 3/8 in. Compression X 3/8 in. male

Hydraulic Compression style systems - Basic and Heavy Duty

FITTING - 90 DEGREE



22-8M6001392

Used with Compression style hydraulic systems.
90 degree- 3/8 in. Compression X 3/8 in.male

Hydraulic Compression style systems - Basic and Heavy Duty

HYDRAULIC STEERING - COMMON TO POWER STEERING SYSTEMS

These parts are used to install Hydraulic Steering with the Power Steering components. Use hoses 8M0046914 thru 8M0046932 are the hoses that go with these cylinders and helms. All fittings are Power steering fittings found in the Power Steering section.

CYLINDER - HYDRAULIC OR POWER STEERING



898349A11

Cylinder designed to meet all Power Steering strength and performance requirements. This cylinder is the most robust design in the market. Includes all hardware to mount this cylinder including the strongest bolts to attach to the engine.

Verado 175-200 - both Power Steering or Hydraulic V6/1.5 Opti Max Hydraulic - 1.5L Opti needs to order arm 898082A03 to provide clearance
75-150 4 stroke engines.

CYLINDER - HYDRAULIC OR P/S- COUNTER ROTATION



898349A14

Port ot counter rotation cylinder designed to meet all Power Steering strength and performance requirements. This cylinder is the most robust design in the market. Includes all hardware to mount this cylinder including the strongest bolts to attach to the engine

Verado 135-200 - both Power Steering or Hydraulic. Multiple Engines
V6/1.5 Opti Max Hydraulic - 1.5L Opti needs to order arm 898082A03 to provide clearance 75-115 4 stroke engines Multiple OtiMax engines - P/S 150 4 Stroke engines.

CYLINDER - BIG TILLER



898349A15

Cylinder designed to meet all Power Steering strength and performance requirements. This cylinder is the most robust design in the market. Includes all hardware to mount this cylinder including the strongest bolts to attach to the engine.

Big Tiller Cylinder - 75-115 4 Stroke, 75-115 1.5L Opti, 135-250 2.5L/3.0L Opti and 135-200 4 Cylinder Verado

HYDRAULIC HELM PUMP -Q/S



64-891665Q01

Front Mount 1.5 cu in displacement. Approximately 5 turns lock to lock on singles and 10 on dual cylinders
Compact design
Built-in valve for positive rudder lock
Integral relief valve for over pressure protection

Hydraulic Steering for Verado 135 to 175-4 stroke engines
Also can be used on OptiMax with Mercury hydraulic cylinder and hoses. Also can be used on OptiMax with Mercury hydraulic cylinder and hoses Also can be used on 75-115 4 stroke and 1.5L opti 75-115 HP

HYDRAULIC HELM PUMP -Q/S



64-891665Q04

Front Mount 2.0 cu in displacement. Approximately 4 turns lock to lock on singles and 8 on dual cylinders
Compact design
Built-in valve for positive rudder lock
Integral relief valve for over pressure protection

Hydraulic Steering for Verado 135 to 200-4 stroke engines
Also can be used on OptiMax with Mercury hydraulic cylinder and hoses

64-891665Q05

Front Mount 2.4 cu in displacement. Approximately 3 turns lock to lock on singles and 6.5 on dual cylinders
Compact design
Built-in valve for positive rudder lock
Integral relief valve for over pressure protection

Hydraulic Steering for Verado 135 to 200-4 stroke engines
Also can be used on OptiMax with Mercury hydraulic cylinder and hoses

HYDRAULIC HELM PUMP -Q/S-TILT



64-891666Q05

Front Mount 1.5 cu in displacement. Approximately 5 turns lock to lock for singles and 10 on dual cylinders
Compact design
Tilt Range of 48 Deg and 5 locking positions
Built-in valve for positive rudder lock
Integral relief valve for over pressure protection

Hydraulic Steering for Verado 135 to 175-4 stroke engines
Also can be used on OptiMax with Mercury hydraulic cylinder and hoses. Also can be used on OptiMax with Mercury hydraulic cylinder and hoses Also can be used on 75-115 4 stroke and 1.5L opti 75-115 HP

HYDRAULIC HELM PUMP -Q/S-TILT



64-891666Q03

Front Mount 2.0 cu in displacement. Approximately 4 turns lock to lock on singles and 8 on dual cylinders
Compact design
Tilt Range of 48 Deg and 5 locking positions
Built-in valve for positive rudder lock
Integral relief valve for over pressure protection

Hydraulic Steering for Verado 135 to 200-4 stroke engines
Also can be used on OptiMax with Mercury hydraulic cylinder and hoses

64-891666Q04

Front Mount 2.4 cu in displacement. Approximately 3 turns lock to lock on singles and 6.5 on dual cylinders
Compact design
Tilt Range of 48 Deg and 5 locking positions
Built-in valve for positive rudder lock
Integral relief valve for over pressure protection

Hydraulic Steering for Verado 135 to 200-4 stroke engines
Also can be used on OptiMax with Mercury hydraulic cylinder and hoses

MERCURY HYD BOLT-ON STEERING KIT- STD -W/O HOSES



898349A02

This kit includes a standard helm (1.5Cu Inch) with all the needed components to install the helm along with a bolt-on cylinder with hardware . This bolt-on kit is the most robust hydraulic system in the market. The cylinder was tested to all Verado standards for load and strength. The kit also includes high strength machined stainless steel screws that are used at each attachment point. Order Verado hoses 897982K__ series separately

Used on all Verado 135-200 L4 engines, 75-115 4 Cylinder 4 strokes , OptiMax 1/5L and V6 engines (order arm 898082A03 when used on 1.5L Opti) (Use with Power Steering Hoses 8M0046914 thru 8M00469932)

MERCURY HYD BOLT-ON STEERING KIT-TILT -W/O HOSES



898349A03

This kit includes a Tilt helm (1.5 Cu Inch) with all the needed components to install the helm along with a bolt-on cylinder with hardware and remote fill kit. This bolt-on kit is the most robust hydraulic system in the market. The cylinder was tested to all Verado standards for load and strength. The kit also includes high strength machined stainless steel screws that are used at each attachment point. Order Verado hoses (897982K__) separately

Used on all Verado 135-200 L4 engines, 75-115 4 Cylinder 4 strokes , OptiMax 1/5L and V6 engines (order arm 898082A03 when used on 1.5L Opti) (Use with Power Steering Hoses 8M0046914 thru 8M00469932)

VENTED HELM CAP-VCAP



64-891667Q01

VCAP Vented helm cap for use on Q/S helms 891665Q02 and 891666Q01

NON VENTED CAP



19-898432

Required for dual station installations-

REMOTE FILL KIT FOR HYDRAULIC STEERING



64-889934A05

Remote fill adapter for rear mount and tilt mount Hydraulic pumps

Hydraulic Steering for Verado 135 to 200-4 stroke engines
Also can be used on OptiMax with Mercury hydraulic cylinder and hoses

HYDRAULIC HELM STEERING FLUID



92-858078Q01

Meets H5606G military specifications

For use in non-power hydraulic steering systems such as, MerCruiser compact hydraulic helm steering systems and bolt-on steering systems such as SeaStar® by Teleflex®, Inc.

Priced individually, sold @ multiples of 6

946 mL (32 fl oz) plastic bottle

Quicksilver Branded

HYDRAULIC STEERING ARM



898082A03

This arm attaches the cylinder to the engine for 1.5L OptiMax engines. Remove existing arm on 898349A01 cylinder and replace it with this arm for proper clearances

1.5L OptiMax engines

VENTED HELM CAP-VCAP



64-891667Q01

VCAP Vented helm cap for use on Q/S helms 891665Q02 and 891666Q01

X52- TILT MECHANISM



64-889934A04

X52 Tilt- Used with T81 FC, T83 FC helms

ADAPTER FOR POWER PURGE



64-889934A06

Adapter for the Power Puge system

Hydraulic Steering for Verado 135 to 200-4 stroke engines
Also can be used on OptiMax with Mercury hydraulic cylinder and hoses

TIE BAR- SINGLE CYLINDER DUAL ENGINE



64-8M0063473

This tie bar can be used on a dual installation with just one cylinder. 26 inch length

75-115 HP EFI 4 Stroke OB (s/n 1B366823 & above), 150 4 Stroke, 135-200 4 cylinder Verado and Opti Max . Use only with Mercury cylinders for dual engine applications

64-8M0063474

This tie bar can be used on a dual installation with just one cylinder. 28 inch length

75-115 HP EFI 4 Stroke OB (s/n 1B366823 & above), 150 4 Stroke, 135-200 4 cylinder Verado and Opti Max . Use only with Mercury cylinders for dual engine applications

64-8M0063475

This tie bar can be used on a dual installation with just one cylinder. 30 inch length
75-115 HP EFI 4 Stroke OB (s/n 1B366823 & above), 150 4 Stroke, 135-200 4 cylinder Verado and Opti Max . Use only with Mercury cylinders for dual engine applications

64-8M0063476

This tie bar can be used on a dual installation with just one cylinder. 32 inch length
75-115 HP EFI 4 Stroke OB (s/n 1B366823 & above), 150 4 Stroke, 135-200 4 cylinder Verado and Opti Max . Use only with Mercury cylinders for dual engine applications

64-8M0063477

This tie bar can be used on a dual installation with just one cylinder. 34 inch length
75-115 HP EFI 4 Stroke OB (s/n 1B366823 and above), 150 4 Stroke, 135-200 4 cylinder Verado and Opti Max . Use only with Mercury cylinders for dual engine applications

TIE BARS - DUAL ENGINES



64-892789Q22

26 Inches long
Outboard centerline spacing of 66.0 cm (26 in.)
For use with the 75-115 hp EFI FourStroke outboard (s/n 1B366823 & above) and the 135-200 Verado- V6 OptiMax- Up to 600 HP dual Install with one Counter Rotation Engine Also used on multiple 150 4 strokes

64-892789Q23

28 Inches long
Outboard centerline spacing of 71.1 cm (28 in.)
For use with the 75-115 hp EFI FourStroke outboard (s/n 1B366823 & above) and the 135-200 Verado- V6 OptiMax- Up to 600 HP dual Install with one Counter Rotation Engine. Also used on multiple 150 4 strokes

64-892789Q25

30 Inches long
Outboard centerline spacing of 76.2 cm (30 in.)
For use with the 75-115 hp EFI FourStroke outboard (s/n 1B366823 & above) and the 135-200 Verado- V6 OptiMax- Up to 600 HP dual Install with one Counter Rotation Engine. Also used on multiple 150 4 strokes

64-892789Q26

32 Inches long
Outboard centerline spacing of 81.3 cm (32 in.)
For use with the 75-115 hp EFI FourStroke outboard (s/n 1B366823 & above) and the 135-200 Verado- V6 OptiMax- Up to 600 HP dual Install with one Counter Rotation Engine. Also used on multiple 150 4 strokes

64-892789Q27

34 Inches long
Outboard centerline spacing of 86.4 cm (34 in.)
For use with the 75-115 hp EFI FourStroke outboard (s/n 1B366823 & above) and the 135-200 Verado- V6 OptiMax- Up to 600 HP dual Install with one Counter Rotation Engine. Also used on multiple 150 4 strokes

64-892789Q24

36 Inches long
Outboard centerline spacing of 91.5 cm (36 in.)
For use with the 75-115 hp EFI FourStroke outboard (s/n 1B366823 & above) and the 135-200 Verado- V6 OptiMax- Up to 600 HP dual Install with one Counter Rotation Engine. Also used on multiple 150 4 strokes

TIE BARS - TRIPLE ENGINES

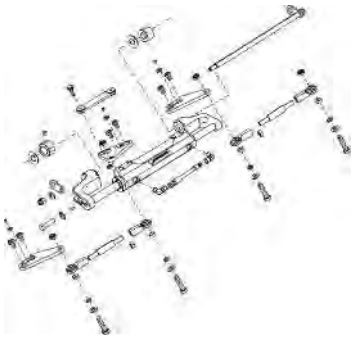

892789Q32

26 Inches long
Outboard centerline spacing of 66.0 cm (26 in.)
OptiMax Multiple Engines
135-200 Verado L4 Also used on multiple 150 4 strokes

892789Q33

28 Inches long
Outboard centerline spacing of 71.1 cm (28 in.)
OptiMax Multiple Engines
135-200 Verado L4 Also used on multiple 150 4 strokes

892789Q34

30 Inches long
Outboard centerline spacing of 71.1 cm (28 in.)
OptiMax Multiple Engines
135-200 Verado L4 Also used on multiple 150 4 strokes

TIE BAR KIT - PORT MOUNTED KICKER



898370A03

Tie bar for Manual Hydraulic Steering System to attach primary engine to kicker engine. Engine will be mounted on the Port side of the primary engine
Verado 135-200 HP as well as Mercury's bolt-on steering system for Opti max and 75-115 4 strokes

TIE BAR KIT - STARBOARD MOUNTED KICKER



898966A02

Tie bar for Manual Hydraulic Steering System to attach primary engine to kicker engine. Engine will be mounted on the Starboard side of the primary engine
Verado 135-200 HP as well as Mercury's bolt-on steering system for Opti max and 75-115 4 strokes

VERADO KICKER ELECTRICAL KIT



897478K02

Battery isolated system that allows you to run your kicker engine and use the Power Steering system without you primary engine running. This system allows you to connect to a deep cell battery (not your starter battery) and the system will provide normal power steering from the wheel. The system will alert you when your auxiliary battery is below 9.5 volts. This signal means that you must start your primary engine to change the battery system. This kit will save the starting battery for primary starting use only.

Verado Power Steering systems with a kicker engine 135-200 Verado

FITTING KIT BULKHEAD



64-8M0088973

Improved bulkhead fitting kit with chrome housing for multiple hose installations.

Multiple Hose Installations for Compression style hoses.

UFLEX STANDARD RACK STEERING SYSTEM

Racktech steering system. Kits will include a helm, x34 bezel and M86 steering cables. The cables have stainless steel output fitting ends, 3/4 " tapered shaft and can be mounted in multiple positions.

STANDARD RACK AND PINION STEERING SYSTEM



64-889935A08

8ft

Racktech 08 steering kit. Kit includes helm,90 degree bezel(X34) and a 8 ft steering cable (M86).

64-889935A09

9 ft

Racktech 09 steering kit. Kit includes helm,90 degree bezel(X34) and a 9 ft steering cable (M86).

64-889935A10

10 ft

Racktech 10 steering kit. Kit includes helm,90 degree bezel(X34) and a 10 ft steering cable (M86).

64-889935A11

11 ft

Racktech 11 steering kit. Kit includes helm,90 degree bezel(X34) and a 11 ft steering cable (M86).

64-889935A12

12 ft

Racktech 12 steering kit. Kit includes helm,90 degree bezel(X34) and a 12 ft steering cable (M86).

64-889935A13

13 ft

Racktech 13 steering kit. Kit includes helm,90 degree bezel(X34) and a 13 ft steering cable (M86).

64-889935A14

14 ft

Racktech 14 steering kit. Kit includes helm,90 degree bezel(X34) and a 14 ft steering cable (M86).

64-889935A15

15 ft

Racktech 15 steering kit. Kit includes helm,90 degree bezel(X34) and a 15 ft steering cable (M86).

64-889935A16

16 ft

Racktech 16 steering kit. Kit includes helm,90 degree bezel(X34) and a 16 ft steering cable (M86).

64-889935A17

17 ft

Racktech 17 steering kit. Kit includes helm,90 degree bezel(X34) and a 17 ft steering cable (M86).

64-889935A18

18 ft

Racktech 18 steering kit. Kit includes helm,90 degree bezel(X34) and a 18 ft steering cable (M86).

64-889935A19

19 ft

Racktech 19 steering kit. Kit includes helm,90 degree bezel(X34) and a 19 ft steering cable (M86).

64-889935A20

20 ft

Racktech 20 steering kit. Kit includes helm,90 degree bezel (X34) and a 20 ft steering cable (M86).

UFLEX STANDARD RACK STEERING SYSTEM / TILT

Racktech steering system. Kits include a helm, X52 tilt mechanism and M86 steering cables. Cables have stainless steel output fitting ends, 3/4 " tapered shaft and can be mounted in multiple positions.

STANDARD RACK STEERING SYSTEM-TILT



64-889936A08

8 ft

Rotech Tilt 08 kit. The kit includes helm, X52 tilt mechanism, and 8 ft steering cable(M86)

64-889936A09

9 ft

Rotech Tilt 09 kit. The kit includes helm, X52 tilt mechanism, and 9 ft steering cable(M86)

64-889936A10

10 ft

Rotech Tilt 10 kit. The kit includes helm, X52 tilt mechanism, and 10 ft steering cable(M86)

64-889936A11

11 ft

Rotech Tilt 11 kit. The kit includes helm, X52 tilt mechanism, and 11 ft steering cable(M86)

64-889936A12

12 ft

Rotech Tilt 12 kit. The kit includes helm, X52 tilt mechanism, and 12 ft steering cable(M86)

64-889936A13

13 ft

Rotech Tilt 13 kit. The kit includes helm, X52 tilt mechanism, and 13 ft steering cable(M86)

64-889936A14

14 ft

Rotech Tilt 14 kit. The kit includes helm, X52 tilt mechanism, and 14 ft steering cable(M86)

64-889936A15

15 ft

Rotech Tilt 15 kit. The kit includes helm, X52 tilt mechanism, and 15 ft steering cable(M86)

64-889936A16

16 ft

Rotech Tilt 16 kit. The kit includes helm, X52 tilt mechanism, and 16 ft steering cable(M86)

64-889936A17

17 ft

Rotech Tilt 17 kit. The kit includes helm, X52 tilt mechanism, and 17 ft steering cable(M86)

64-889936A18

18 ft

Rotech Tilt 18 kit. The kit includes helm, X52 tilt mechanism, and 18 ft steering cable(M86)

64-889936A19

19 ft

Rotech Tilt 19 kit. The kit includes helm, X52 tilt mechanism, and 19 ft steering cable(M86)

64-889936A20

20 ft

Rotech Tilt 20 kit. The kit includes helm, X52 tilt mechanism, and 20 ft steering cable(M86)

UFLEX ZEROTORQUE FEEDBACK RACK STEERING SYSTEM

Accutech Zero Torque Feedback steering system. Kits include a helm, X34 bezel and M86 steering cable. Cables have atainless steel output fitting ends, 3/4 " tapered shaft and can be mounted in multipe positions.

Ref Service Bulletin 2007-13 for Ride Guide replacement Information

ZERO TORQUE FEEDBACK RACK STEERING SYSTEM



64-889937Q08

8 ft Replaces Ride Guide System per Service Bulletin 2007-13
Accutech 08 kit. Kit includes helm, X34 bezel and 8 ft steering cable (M86)

64-889937Q09

9 ft Replaces Ride Guide System Ref to Service Bulletin 2007-13
Accutech 09 kit. Kit includes helm, X34 bezel and 9 ft steering cable (M86)

64-889937Q10

10 ft Replaces Ride Guide System Ref Service Bulliten 2007-13
Accutech 10 kit. Kit includes helm, X34 bezel and 10 ft steering cable (M86)

64-889937Q11

11 ft Replaces Ride Guide System Ref Service Bulletin 2007-13
Accutech 11 kit. Kit includes helm, X34 bezel and 11 ft steering cable (M86)

64-889937Q12

12 ft Replaces Ride Guide System Ref to Service Bulletin 2007-13
Accutech 12 kit. Kit includes helm, X34 bezel and 12 ft steering cable (M86)

64-889937Q13

13 ft Replaces Ride Guide System Ref Service Bulletin 2007-13
Accutech 13 kit. Kit includes helm, X34 bezel and 13 ft steering cable (M86)

64-889937Q14

14 ft
Replaces Ride Guide System Ref Service Bulletin 2007-13
Accutech 14 kit. Kit includes helm, X34 bezel and 14 ft steering cable (M86)

64-889937Q15

15 ft Repalces Ride Guide System Ref Service Bulletin 2007-13
Accutech 15 kit. Kit includes helm, X34 bezel and 15 ft steering cable (M86)

64-889937Q16

16 ft Replaces Ride Guide System Ref Service Bulletin 2007-13
Accutech 16 kit. Kit includes helm, X34 bezel and 16 ft steering cable (M86)

64-889937Q17

17 ft Replaces Ride Guide System Ref Service Bulletin 2007-13
Accutech 17 kit. Kit includes helm, X34 bezel and 17 ft steering cable (M86)

64-889937Q18

18 ft Replaces Ride Guide System Ref Service Bulletin 2007-13
Accutech 18 kit. Kit includes helm, X34 bezel and 18 ft steering cable (M86)

64-889937Q19

19 ft Replaces Ride Guide System Ref Service Bulletin 2007-13
Accutech 19 kit. Kit includes helm, X34 bezel and 19 ft steering cable (M86)

64-889937Q20

20 ft Replaces Ride Guide System Ref Service Bulletin 2007-13
Accutech 20 kit. Kit includes helm, X34 bezel and 20 ft steering cable (M86)

64-889937Q21

21 ft Replaces Ride Guide System Ref Service Bulletin 2007-13
Accutech 21 kit. Kit includes helm, X34 bezel and 21 ft steering cable (M86)

64-889937Q22
22 ft Replaces Ride Guide System Ref Service Bulletin 2007-13
Accutech 22 kit. Kit includes helm, X34 bezel and 22 ft steering cable (M86)

64-889937Q23
23 ft Replaces Ride Guide System Ref Service Bulletin 2007-13
Accutech 23 kit. Kit includes helm, X34 bezel and 23 ft steering cable (M86)

64-889937Q24
24 ft Replaces Ride Guide System Ref Service Bulletin 2007-13
Accutech 24 kit. Kit includes helm, X34 bezel and 24 ft steering cable (M86)

64-889937Q25
25 ft Replaces Ride Guide System Ref Service Bulletin 2007-13
Accutech 25 kit. Kit includes helm, X34 bezel and 25 ft steering cable (M86)

64-889937Q26
26 ft Replaces Ride Guide System Ref Service Bulletin 2007-13
Accutech 26 kit. Kit includes helm, X34 bezel and 20 ft steering cable (M86)

64-889937Q27
27 ft Replaces Ride Guide System Ref Service Bulletin 2007-13
Accutech 27 kit. Kit includes helm, X34 bezel and 27 ft steering cable (M86)

64-889937Q28
28 ft Replaces Ride Guide System Ref Service Bulletin 2007-13
Accutech 28 kit. Kit includes helm, X34 bezel and 28 ft steering cable (M86)

64-889937Q29
209ft Replaces Ride Guide System Ref Service Bulletin 2007-13
Accutech 29 kit. Kit includes helm, X34 bezel and 29 ft steering cable (M86)

64-889937Q30
30 ft Replaces Ride Guide System Ref Service Bulletin 2007-13
Accutech 30 kit. Kit includes helm, X34 bezel and 30 ft steering cable (M86)

64-889937Q32
32 ft Replaces Ride Guide System Ref Service Bulletin 2007-13
Accutech 232kit. Kit includes helm, X34 bezel and 32 ft steering cable (M86)

64-889937Q34
34 ft Replaces Ride Guide System Ref Service Bulletin 2007-13
Accutech 34 kit. Kit includes helm, X34 bezel and 34 ft steering cable (M86)

64-889937Q36
36 ft Replaces Ride Guide System Ref Service Bulletin 2007-13
Accutech 36 kit. Kit includes helm, X34 bezel and 36 ft steering cable (M86)

64-889937Q38
38 ft Replaces Ride Guide System Ref Service Bulletin 2007-13
Accutech 38 kit. Kit includes helm, X34 bezel and 38 ft steering cable (M86)

64-889937Q40
40 ft Replaces Ride Guide System Ref Service Bulletin 2007-13
Accutech 40 kit. Kit includes helm, X34 bezel and 40 ft steering cable (M86)

64-889937Q42
42 ft Replaces Ride Guide System Ref Service Bulletin 2007-13
Accutech 42 kit. Kit includes helm, X34 bezel and 42 ft steering cable (M86)

64-889937Q44
44 ft Replaces Ride Guide System Ref Service Bulletin 2007-13
Accutech 44 kit. Kit includes helm, X34 bezel and 44 ft steering cable (M86)

64-889937Q48
48 ft Replaces Ride Guide System Ref Service Bulletin 2007-13
Accutech 48 kit. Kit includes helm, X34 bezel and 48 ft steering cable (M86)

64-889937Q50
50 ft Replaces Ride Guide System Ref Service Bulletin 2007-13
Accutech 50 kit. Kit includes helm, X34 bezel and 50 ft steering cable (M86)

64-889937Q52
52 ft Replaces Ride Guide System Ref Service Bulletin 2007-13
Accutech 52 kit. Kit includes helm, X34 bezel and 52 ft steering cable (M86)

64-889937Q58
58 ft Replaces Ride Guide System Ref Service Bulletin 2007-13
Accutech 58 kit. Kit includes helm, X34 bezel and 58 ft steering cable (M86)

64-889937Q60
60 ft Replaces Ride Guide System Ref Service Bulletin 2007-13
Accutech 60 kit. Kit includes helm, X34 bezel and 60 ft steering cable (M86)

UFLEX ZEROTORQUE FEEDBACK RACK SYSTEM/ TILT

Accutech Zero Torque Feedback steering system. Kit includes a helm, X52 tilt mechanism and M86 steering cable. Cables have stainless steel output fitting ends, 3/4 " tapered shaft and can be mounted in multiple positions.

ZERO TORQUE FEEDBACK RACK TILT STEERING SYSTEM



64-889938A08
8 ft
Accutech Tilt 08 Kit. Kit includes helm, X52 tilt mechanism, and 8 ft Steering cable (M86).

64-889938A09
9 ft
Accutech Tilt 09 Kit. Kit includes helm, X52 tilt mechanism, and 9 ft Steering cable (M86).

64-889938A10
10 ft
Accutech Tilt 10 Kit. Kit includes helm, X52 tilt mechanism, and 10 ft Steering cable (M86).

64-889938A11
11 ft
Accutech Tilt 11 Kit. Kit includes helm, X52 tilt mechanism, and 11 ft Steering cable (M86).

64-889938A12
12 ft
Accutech Tilt 12 Kit. Kit includes helm, X52 tilt mechanism, and 12 ft Steering cable (M86).

64-889938A13
13 ft
Accutech Tilt 13 Kit. Kit includes helm, X52 tilt mechanism, and 13 ft Steering cable (M86).

64-889938A14
14 ft
Accutech Tilt 14 Kit. Kit includes helm, X52 tilt mechanism, and 14 ft Steering cable (M86).

64-889938A15
15 ft
Accutech Tilt 15 Kit. Kit includes helm, X52 tilt mechanism, and 15 ft Steering cable (M86).

64-889938A16
16 ft
Accutech Tilt 16 Kit. Kit includes helm, X52 tilt mechanism, and 16 ft Steering cable (M86).

64-889938A17
17 ft
Accutech Tilt 17 Kit. Kit includes helm, X52 tilt mechanism, and 17 ft Steering cable (M86).

64-889938A18
18 ft
Accutech Tilt 18 Kit. Kit includes helm, X52 tilt mechanism, and 18 ft Steering cable (M86).

64-889938A19

19 ft

Accutech Tilt 19 Kit. Kit includes helm, X52 tilt mechanism, and 19 ft Steering cable (M86).

64-889938A20

20 ft

Accutech Tilt 20 Kit. Kit includes helm, X52 tilt mechanism, and 20 ft Steering cable (M86).

UFLEX MECHANICAL STEERING CABLES

Replacement rack steering cable for Accutech and Racktech steering systems. Also replaces Morse Command 200 and teleflex "The Rack" cables.

RACK REPLACEMENT STEERING CABLE



64-889940A08

8 ft

M86x08

64-889940A09

9 ft

M86x09

64-889940A10

10 ft

M86x10

64-889940A11

11 ft

M86x11

64-889940A12

12 ft

M86x12

64-889940A13

13 ft

M86x13

64-889940A14

14 ft

M86x14

64-889940A15

15 ft

M86x15

64-889940A16

16 ft

M86x16

64-889940A17

17 ft

M86x17

64-889940A18

18 ft

M86x18

64-889940A19

19 ft

M86x19

64-889940A20

20 ft

M86x20

64-889940A21

21 ft

M86x21

64-889940A22

22 ft

M86x22

64-889940A23

23 ft

M86x23

64-889940A24

24 ft

M86x24

64-889940A25

25 ft

M86x25

64-889940A26

26 ft

M86x26

64-889940A27

27 ft

M86x27

64-889940A28

28 ft

M86x28

64-889940A29

29 ft

M86x29

64-889940A30

30 ft

M86x30

64-889940A32

32 ft

M86x32

64-889940A34

34 ft

M86x34

64-889940A36

36 ft

M86x36

64-889940A38

38 ft

M86x38

64-889940A40

40 ft

M86x40

64-889940A42

42 ft

M86x42

64-889940A44

44 ft

M86x44

64-889940A46

46 ft

M86x46

64-889940A48

48 ft

M86x48

64-889940A50

50 ft

M86x50

TELEFLEX NFB RACK SYSTEM

Single or dual cable. No feedback steering mechanism standard 3/4" tapered steering shaft.

NFB BACK MOUNT RACK SYSTEM SINGLE CABLE

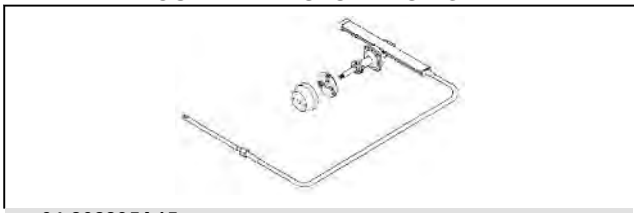

64-802895A15

15 ft. (4.6m)

TELEFLEX NON-NFB SAFE-T QC ROTARY STEERING SYSTEMS

Designed with standard 3/4 in.(19 mm) round taper steering shaft and stainless steel cable output ends for maximum corrosion resistance. Features cable with quick connect to steering helm. Three turns lock-to-lock for standard travel. 90 degree helm mount.

SAFE-T QUICK CONNECT STEERING SYSTEM



64-826472A 8

8 ft. (2.4m)

64-826472A 9

9 ft. (2.7m)

64-826472A10

10 ft. (3.0m)

64-826472A11

11 ft. (3.4m)

64-826472A12

12 ft. (3.7m)

64-826472A13

13 ft. (4.0m)

64-826472A14

14 ft. (4.3m)

64-826472A15

15 ft. (4.6m)

64-826472A16

16 ft. (4.9m)

64-826472A17

17 ft. (5.2m)

64-826472A18

18 ft. (5.5m)

64-826472A19

19 ft. (5.87m)

UFLEX STANDARD ROTARY STEERING SYSTEMS

Rotech steering system features planetary gear design for increased longevity, greater effidiency and smooth operation. Kits include T71 FC helm, X34 bezel and M66 steering cables. SS output fittings, 3/4 " tapered shaft and flexible mounting positions

STANDARD ROTARY STEERING SYSTEM



64-889930A08

8 ft

Rotech 08 kit. Kit includes T71 FC helm, X34 mounting bezel and 8 ft Steering cable (M66).

64-889930A09

9 ft

Rotech 09 kit. Kit includes T71 FC helm, X34 mounting bezel and 9 ft Steering cable (M66).

64-889930A10

10 ft

Rotech 10 kit. Kit includes T71 FC helm, X34 mounting bezel and 10 ft Steering cable (M66).

64-889930A11

11 ft

Rotech 11 kit. Kit includes T71 FC helm, X34 mounting bezel and 11 ft Steering cable (M66).

64-889930A12

12 ft

Rotech 12 kit. Kit includes T71 FC helm, X34 mounting bezel and 12 ft Steering cable (M66).

64-889930A13

13 ft

Rotech 13 kit. Kit includes T71 FC helm, X34 mounting bezel and 13 ft Steering cable (M66).

64-889930A14

14 ft

Rotech 14 kit. Kit includes T71 FC helm, X34 mounting bezel and 14 ft Steering cable (M66).

64-889930A15

15 ft

Rotech 15 kit. Kit includes T71 FC helm, X34 mounting bezel and 15 ft Steering cable (M66).

64-889930A16

16 ft

Rotech 16 kit. Kit includes T71 FC helm, X34 mounting bezel and 16 ft Steering cable (M66).

64-889930A17

17 ft

Rotech 17 kit. Kit includes T71 FC helm, X34 mounting bezel and 17 ft Steering cable (M66).

64-889930A18

18 ft

Rotech 18 kit. Kit includes T71 FC helm, X34 mounting bezel and 18 ft Steering cable (M66).

64-889930A19

19 ft

Rotech 19 kit. Kit includes T71 FC helm, X34 mounting bezel and 19 ft Steering cable (M66).

64-889930A20

20 ft

Rotech 20 kit. Kit includes T71 FC helm, X34 mounting bezel and 20 ft Steering cable (M66).

UFLEX STANDARD ROTARY STEERING SYSTEMS/ TILT

Rotech steering system features a planetary gear design for increased longevity, greater efficiency and smooth operation. Includes T81 FC helm, X52 tilt mechanism and M66 steering cables. Automotive style, 5 position tilt range.

STANDARD ROTARY STEERING SYSTEM TILT



64-889931A08

8 ft

Rotech Tilt 08 kit. Kit includes the T81 FC helm, X52 tilt mechanism and 8 ft steering cable (M66).

64-889931A09

9 ft

Rotech Tilt 09 kit. Kit includes the T81 FC helm, X52 tilt mechanism and 9 ft steering cable (M66).

64-889931A10

10 ft

Rotech Tilt 10 kit. Kit includes the T81 FC helm, X52 tilt mechanism and 10 ft steering cable (M66).

64-889931A11

11 ft

Rotech Tilt 11 kit. Kit includes the T81 FC helm, X52 tilt mechanism and 11 ft steering cable (M66).

64-889931A12

12 ft

Rotech Tilt 12 kit. Kit includes the T81 FC helm, X52 tilt mechanism and 12 ft steering cable (M66).

64-889931A13

13 ft

Rotech Tilt 13 kit. Kit includes the T81 FC helm, X52 tilt mechanism and 13 ft steering cable (M66).

64-889931A14

14 ft

Rotech Tilt 14 kit. Kit includes the T81 FC helm, X52 tilt mechanism and 14 ft steering cable (M66).

64-889931A15

15 ft

Rotech Tilt 15 kit. Kit includes the T81 FC helm, X52 tilt mechanism and 15 ft steering cable (M66).

64-889931A16

16 ft

Rotech Tilt 16 kit. Kit includes the T81 FC helm, X52 tilt mechanism and 16 ft steering cable (M66).

64-889931A17

17 ft

Rotech Tilt 17 kit. Kit includes the T81 FC helm, X52 tilt mechanism and 17 ft steering cable (M66).

64-889931A18

18 ft

Rotech Tilt 18 kit. Kit includes the T81 FC helm, X52 tilt mechanism and 18 ft steering cable (M66).

64-889931A19

19 ft

Rotech Tilt 19 kit. Kit includes the T81 FC helm, X52 tilt mechanism and 19 ft steering cable (M66).

64-889931A20

20 ft

Rotech Tilt 20 kit. Kit includes the T81 FC helm, X52 tilt mechanism and 20 ft steering cable (M66).

UFLEX STANDARD ROTARY STEERING SYSTEMS/ DUAL CABLE

Dual cable Rotech steering system. Features planetary gear design for longevity, greater efficiency and smoother operation. Includes T72 FC helm, X34 bezel and two M66 steering cables. SS ends, 3/4 " tapered shaft and flexible mounting positions.

STANDARD DUAL CABLE ROTARY STEERING SYSTEM



64-889932A08

8 ft

Rotech II 08 kit. Kit includes T72 FC helm, X34 bezel and 8 ft steering cable (M66).

64-889932A09

9 ft

Rotech II 09 kit. Kit includes T72 FC helm, X34 bezel and 9 ft steering cable (M66).

64-889932A10

10 ft

Rotech II 10 kit. Kit includes T72 FC helm, X34 bezel and 10 ft steering cable (M66).

64-889932A11

11 ft

Rotech II 11 kit. Kit includes T72 FC helm, X34 bezel and 11 ft steering cable (M66).

64-889932A12

12 ft

Rotech II 12 kit. Kit includes T72 FC helm, X34 bezel and 12 ft steering cable (M66).

64-889932A13

13 ft

Rotech II 13 kit. Kit includes T72 FC helm, X34 bezel and 13 ft steering cable (M66).

64-889932A14

14 ft

Rotech II 14 kit. Kit includes T72 FC helm, X34 bezel and 14 ft steering cable (M66).

64-889932A15

15 ft

Rotech II 15 kit. Kit includes T72 FC helm, X34 bezel and 15 ft steering cable (M66).

64-889932A16

16 ft

Rotech II 16 kit. Kit includes T72 FC helm, X34 bezel and 16 ft steering cable (M66).

64-889932A17

17 ft

Rotech II 17 kit. Kit includes T72 FC helm, X34 bezel and 17 ft steering cable (M66).

64-889932A18

18 ft

Rotech II 18 kit. Kit includes T72 FC helm, X34 bezel and 18 ft steering cable (M66).

64-889932A19

19 ft

Rotech II 19 kit. Kit includes T72 FC helm, X34 bezel and 19 ft steering cable (M66).

64-889932A20

20 ft

Rotech II 20 kit. Kit includes T72 FC helm, X34 bezel and 20 ft steering cable (M66).

TELEFLEX NFB ROTARY STEERING

No Feedback Steering Control. Used on Bass boats, runabouts, center consoles--virtually all of today's outboard boats with wheels to 16" diameter.
Replaces Teleflex Safe-T steering systems without dash modifications.

NFB 4.2 ROTARY SYSTEM SINGLE CABLE



64-851622A10

10 ft. (3.0m)

64-851622A11

11 ft. (3.4m)

64-851622A12

12 ft. (3.7m)

64-851622A13

13 ft. (4.0m)

64-851622A14

14 ft. (4.3m)

64-851622A15

15 ft. (4.6m)

64-851622A16

16 ft. (4.9m)

64-851622A17

17 ft. (5.2m)

64-851622A18

18 ft. (5.5m)

64-851622A19

19 ft. (5.8m)

64-851622A20

20 ft. (6.1m)

NFB 4.2 SINGLE HELM REPLACEMENT PARTS



64-851622A 1

NFB 4.2 Single Helm

NFB 4.2 ROTARY SYSTEM DUAL CABLE

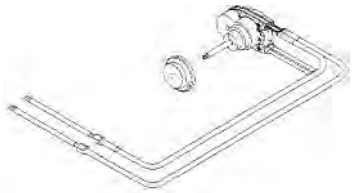

64-802894A12

12 ft. (3.7m)

64-802894A13

13 ft. (4.0m)

64-802894A14

14 ft. (4.3m)

64-802894A15

15 ft. (4.6m)

64-802894A16

16 ft. (4.9m)

NFB 4.2 DUAL HELM REPLACEMENT PART



64-851831A 1

NFB 4.2 Dual Helm

UFLEX ZEROTORQUE FEEDBACK ROTARY STEERING SYSTEM

Accura Zero Torque feedback steering systems features a clutch that eliminates rudder torque and a planetary gear design for increased longevity, greater efficiency and smooth operatiion. Kits include the T73 FC helm, X34 bezel and M66 steering cable.

Ref Service Bulletin 2007-13 for Ride Guide replacement Information

ZERO TORQUE FEEDBACK ROTARY STEERING SYSTEM



889933Q08

8 ft Replaces Ride Guide System Ref Service Bulletin 2007-13

Accura 8 kit. Kit includes helm, X34 bezel and 8 ft Steering cable (M66).

889933Q09

9 ft Replacement for Ride Guide System Ref to service Bulletin 2007-13

889933Q10

10 ft Replacement for Ride Guide System Ref to service Bulletin 2007-13

889933Q11

11 ft Replacement for Ride Guide System Ref to service Bulletin 2007-13

889933Q12

12 ft Replacement for Ride Guide System Ref to service Bulletin 2007-13

889933Q13

13 ft Replacement for Ride Guide System Ref to service Bulletin 2007-13

889933Q14

14 ft Replacement for Ride Guide System Ref to service Bulletin 2007-13

889933Q15

15 ft Replacement for Ride Guide System Ref to service Bulletin 2007-13

889933Q16

16 ft Replacement for Ride Guide System Ref to service Bulletin 2007-13

889933Q17

17 ft Replacement for Ride Guide System Ref to service Bulletin 2007-13

889933Q18

18 ft Replacement for Ride Guide System Ref to service Bulletin 2007-13

889933Q19

19 ft Replacement for Ride Guide System Ref to service Bulletin 2007-13

889933Q20

20 ft Replacement for Ride Guide System Ref to service Bulletin 2007-13

UFLEX ZEROTORQUE FEEDBACK ROTARY SYSTEMS / TILT

Accura Zero Tirque Feedback steering system features a clutch that eliminates rudder torque and a planetary gear design for increased longevity, greater efficiency and smooth operation. Kit includes the T73 FC helm, X52 tilt mechanism and the M66 cables.

ZERO TORQUE FEEDBACK ROTARY STEERING SYSTEM TILT



64-889934A08

8 ft

Accura Tilt 08 Kit includes T73 FC helm, X52 tilt mechanism and 8 ft Steering cable (M66).

64-889934A09

9 ft

Accura Tilt 09 Kit includes T73 FC helm, X52 tilt mechanism and 9 ft Steering cable (M66).

64-889934A10

10 ft

Accura Tilt 10 Kit includes T73 FC helm, X52 tilt mechanism and 10 ft Steering cable (M66).

64-889934A11

11 ft

Accura Tilt 11Kit includes T73 FC helm, X52 tilt mechanism and 11ft Steering cable (M66).

64-889934A12

12 ft

Accura Tilt 12Kit includes T73 FC helm, X52 tilt mechanism and 12ft Steering cable (M66).

64-889934A13

13 ft

Accura Tilt 13 kit Includes T73 FC helm, X52 tilt mechanism and 13 ft steering cable (M66).

64-889934A14

14 ft

Accura Tilt 14kit Includes T73 FC helm, X52 tilt mechanism and 14ft steering cable (M66).

64-889934A15

15 ft

Accura Tilt 15kit Includes T73 FC helm, X52 tilt mechanism and 15ft steering cable (M66).

64-889934A16

16 ft

Accura Tilt 16kit Includes T73 FC helm, X52 tilt mechanism and 16ft steering cable (M66).

64-889934A17

17 ft

Accura Tilt 17kit Includes T73 FC helm, X52 tilt mechanism and 17ft steering cable (M66).

64-889934A18

18 ft

Accura Tilt 18kit Includes T73 FC helm, X52 tilt mechanism and 18ft steering cable (M66).

64-889934A19

19 ft

Accura Tilt 19kit Includes T73 FC helm, X52 tilt mechanism and 19ft steering cable (M66).

64-889934A20

20 ft

Accura Tilt 20kit Includes T73 FC helm, X52 tilt mechanism and 20ft steering cable (M66).

UFLEX ROTARY STEERING CABLES

Replacement rotary steering cables for Rotech and Accura steering systems. Also replaces Morse Command 290 and Teleflex QC cables.

ROTARY STEERING CABLE (M66)



64-889939A08

8 ft

Replacement cable

64-889939A09

9 ft

Replacement cable

64-889939A10

10 ft

Replacement cable

64-889939A11

11 ft

Replacement cable

64-889939A12

12 ft

Replacement cable

64-889939A13

13 ft

Replacement cable

64-889939A14

14 ft

Replacement cable

64-889939A15

15 ft

Replacement cable

64-889939A16

16 ft

Replacement cable

64-889939A17

17 ft

Replacement cable

64-889939A18

18 ft

Replacement cable

64-889939A19

19 ft

Replacement cable

64-889939A20

20 ft

Replacement cable

ADAPTER KIT -M66 TO THREADED HELM



64-892790A04

Adapts M66 cable to threaded helms

ADAPTER KIT -M47 TO 290 HELM



64-892790A03

Adapts M47 steering cable to Morse D290 helm

UFLEX STEERING COMPONENTS-HELMS, BEZELS,TILT MECH.

X35- 20 DEGREE MOUNTING BEZEL



64-889930A03

Use to adjust helm angles

X35- Used with T71 FC, T72 FC, T73 FC, G22, G22 NR helms or Mercury Power Steering (2005 Verado)

X34- 90 DEGREE MOUNTING BEZEL



64-889930A02

Use with helms to adjust helm angles

X34- Used with T71 FC, T72 FC, T73 FC, G22, G22 NR helms or Mercury Power Steering (2005 Verado)

X52- TILT MECHANISM



64-889934A04

X52 Tilt- Used with T81 FC, T83 FC helms

STANDARD ROTARY STEERING HELM-T71 FC



64-889930A01

T71 FC helm

STANDARD DUAL CABLE ROTARY STEERING HELM-T72 FC



64-889932A01

T72 FC helm- Use for dual cable installations

ZERO TORQUE FEEDBACK STEERING HELM-T73 FC



64-889933A01

T73 FC helm-

STANDARD ROTARY STEERING HELM TILT-T81 FC



64-889931A01

T81 FC helm-Tilt

ZERO TORQUE FEEDBACK ROTARY STEERING HELM-TLIT-T83



64-889934A01

T83 FC helm-Zero Torque Feedback -Tilt

STANDARD RACK HELM- G86



64-889935A01

G86- Standard Rack Helm

STANDARD RACK HELM-TILT-G96



64-889936A01

G96- Standard Rack Helm- Tilt

ZERO TORQUE FEEDBACK RACK STEERING HELM-G88 NR



64-889937A01

G88 NR- Zero Torque Rack Helm

ZERO TORQUE FEEDBACK RACK HELM-TILT- G98 NR



64-889938A01

G98 NR- Zero Torque Rack Helm-Tilt

UFLEX MISC COMPONENTS

TIE BARS - DUAL ENGINES



64-892789Q22

26 Inches long
Outboard centerline spacing of 66.0 cm (26 in.)

For use with the 75-115 hp EFI FourStroke outboard (s/n 1B366823 & above) and the 135-200 Verado- V6 OptiMax- Up to 600 HP dual Install with one Counter Rotation Engine Also used on multiple 150 4 strokes

64-892789Q23

28 Inches long
Outboard centerline spacing of 71.1 cm (28 in.)

For use with the 75-115 hp EFI FourStroke outboard (s/n 1B366823 & above) and the 135-200 Verado- V6 OptiMax- Up to 600 HP dual Install with one Counter Rotation Engine. Also used on multiple 150 4 strokes

64-892789Q25

30 Inches long
Outboard centerline spacing of 76.2 cm (30 in.)

For use with the 75-115 hp EFI FourStroke outboard (s/n 1B366823 & above) and the 135-200 Verado- V6 OptiMax- Up to 600 HP dual Install with one Counter Rotation Engine. Also used on multiple 150 4 strokes

64-892789Q26

32 Inches long
Outboard centerline spacing of 81.3 cm (32 in.)

For use with the 75-115 hp EFI FourStroke outboard (s/n 1B366823 & above) and the 135-200 Verado- V6 OptiMax- Up to 600 HP dual Install with one Counter Rotation Engine. Also used on multiple 150 4 strokes

64-892789Q27

34 Inches long
Outboard centerline spacing of 86.4 cm (34 in.)

For use with the 75-115 hp EFI FourStroke outboard (s/n 1B366823 & above) and the 135-200 Verado- V6 OptiMax- Up to 600 HP dual Install with one Counter Rotation Engine. Also used on multiple 150 4 strokes

64-892789Q24

36 Inches long
Outboard centerline spacing of 91.5 cm (36 in.)

For use with the 75-115 hp EFI FourStroke outboard (s/n 1B366823 & above) and the 135-200 Verado- V6 OptiMax- Up to 600 HP dual Install with one Counter Rotation Engine. Also used on multiple 150 4 strokes

SECOND STATION HOSE AND FITTING KIT-KIT 95 2S



64-891667A03

Kit 95 2S- Hose and fitting kit for second station installations

3/8 IN. COPPER TUBE FITTING KIT



64-891667A04

Includes 2 1.6 ft nylon tubes and all necessary fitting for a single station.

ADAPTER KIT -M47 TO 290 HELM



64-892790A03

Adapts M47 steering cable to Morse D290 helm

ADAPTER KIT -M66 TO THREADED HELM



64-892790A04
Adapts M66 cable to threaded helms

TELEFLEX ROTARY STEERING CABLES

Will work with Non-NFB and NFB Rotary helms with quick connects.

REPLACEMENT CABLES



64-851621A 8
8 ft. (2.4m)

64-851621A 9
9 ft. (2.7m)

64-851621A10
10 ft. (3.0m)

64-851621A11
11 ft. (3.4m)

64-851621A12
12 ft. (3.7m)

64-851621A13
13 ft. (4.0m)

64-851621A14
14 ft. (4.3m)

64-851621A15
15 ft. (4.6m)

64-851621A16
16 ft. (4.9m)

64-851621A17
17 ft. (5.2m)

64-851621A18
18 ft. (5.5m)

64-851621A19
19 ft. (5.8m)

64-851621A20
20 ft. (6.1m)

TELEFLEX MECHANICAL STEERING HELMS

BIG-T STEERING HELM



64-826468A 1

SAFE-T "TS" STEERING HELM



64-826470A 1

SAFE-T QUICK CONNECT STEERING HELM



64-826472A 1
Standard equipment on Amanzi series boats or can be used for rotary steering systems with 3/4 in. diameter tapered shafts.

TELEFLEX BIG-T BEZEL KIT/MISC

BIG-T BEZEL KIT



64-809883A 1

20/90 Degree mount

BEZEL 90 DEG



64-826465

Bezel 90 deg. Safe-T QC

BEZEL 20 DEG



64-826464

Bezel 20 deg. 4.2 Rotary

TELEFLEX STEERING CONNECTION KITS



64-826449A 1

Clamp Block, Outboard Stainless steel

TELEFLEX NFB SEASTAR HYDRAULIC OUTBOARD STEERING

The most popular outboard hydraulic steering system offering smooth, super-efficient No FeedBack Steering designed for today's high performance hulls with single or multiple outboards up to 600 HP combined. SeaStar Steering systems are totally self-contained, non-power-assisted units that make steering a boat a truly enjoyable experience. Their super-efficient hydraulic operations produces an effect most people equate with "power steering". Although some dash modifications are required when you upgrade from a mechanical system, there are no pressure vessels or powers units to mount. 4.5 turns lock-to-lock. Packaged complete with helm, cylinder, hoses, fittings, oil, bleeder kit and detailed instruction sheet.

SEASTAR PACKAGE WITHOUT HOSES



64-802902A 1

Front pivot mount outboard steering package. Does not include hoses. Order the correct length hoses separately.

SEASTAR HELM



64-826501A 1

SEA STAR TILT HELM



862250

Sport tilt helm

Standard equipment used on MCM sterndrives w/ CHS

SEASTAR HELM MOUNT



64-826484

This kit is designed to mount a SeaStar and SeaStar Pro helm at a 20 degree angle to the mounting surface. Four possible mountings by varying wedge position. No helm modifications are required.

SEASTAR HELM BACK PLATE KIT



64-826483A 1

Allows SeaStar and SeaStar Pro helms retrofit into boats where the following helms were previously installed: SyTen, pre-1991 square SeaStar, or mechanical rotary steering. The kit also reduces helm protrusion by thickness of dash.

FRONT PIVOT MOUNT OUTBOARD CYLINDER



64-804378A 1

FRONT PIVOT MOUNT OUTBOARD CYLINDER



64-889457A01

Fits Mercury 225 EFI FourStroke outboard engine, model year 2002 and newer.

FRONT MOUNT OUTBOARD CYLINDER (STANDARD)



64-826491A 1

SEASTAR HOSE KIT



64-826513A14

2 hoses - 14 ft(4.3m)
Also fits MCM sterndrives w/ CHS

64-826513A16

2 hoses - 16 ft(4.9m)
Also fits MCM sterndrives w/ CHS

64-826513A18

2 hoses- 18 ft (5.5m)
Also fits MCM sterndrives w/ CHS

64-826513A20

2 hoses- 20 ft (6.1m)
Also fits MCM sterndrives w/ CHS

64-826513A22

2 hoses - 22 ft (6.7m)
Also fits MCM sterndrives w/ CHS

64-826513A24

2 hoses - 24 ft (7.3m)
Also fits MCM sterndrives w/ CHS

HOSE CONNECTION KIT



64-826497A 1

Connects 3/8 in.(9.5mm) diameter copper tubing to SeaStar Cylinders (using 3/8 in.[9.5 mm] diameter nylon tubing.

HOSE CONNECTION KIT



64-826498A 1

Connects 3/8 in.(9.5mm) diameter copper tubing to SeaStar Cylinders (using SeaStar Outboard Hoses)

FRONT PIVOT MOUNT CYLINDER CHART

Front Pivot Mount Outboard Cylinder

See Teleflex application guide for additional Information

Brand	Year Range	Model	Front Pivot Mount O/B Cylinder
Honda	1996 - 2016	75-90 HP	64-804378A 1
Honda	1998 - 2016	30-50 HP	64-804378A 1
Johnson/Evinrude	1997 - 2016	65-175 HP	64-804378A 1
Johnson/Evinrude	1991 - 2016	200-225 HP	64-804378A 1
Johnson/Evinrude	1991 - 2016	250-300 HP	64-804378A 1
Johnson/Evinrude	1996 - 2016	90-225 HP Ficht	64-804378A 1
Johnson/Evinrude	1998 - 2016	65-70 HP 4-Stroke	64-804378A 1
Mercury/Mariner	1984 - 1994	2.4/2,5 EFI	64-804378A 1
Mercury/Mariner	1989 - 2016	75-300 HP	64-804378A 1
Mercury/Mariner	1998 - 2016	30-60 HP	64-804378A 1
Mercury	2002 - 2016	225 EFI FourStroke	64-889457A01
Nissan/Tohatsu	1990 - 2016	90-140 HP	64-804378A 1
Suzuki	1986 - 2016	100 HP	64-804378A 1
Suzuki	1986 - 2016	115-140 HP	64-804378A 1
Suzuki	1986 - 2016	150-225 HP	64-804378A 1
Suzuki	1998 - 2016	65-70 HP 4-Stroke	64-804378A 1
U S Marine/Force	1996 - 2016	90-120 HP	64-804378A 1
Yamaha	1997 - 2016	100-225 HP	64-804378A 1
Yamaha	1987 - 2016	225HP	64-804378A 1
Yamaha	1990 - 2016	250 HP	64-804378A 1
Yamaha	1998 - 2016	40-50-60 HP	64-804378A 1
Yamaha	1998 - 2016	70and 90 HP	64-804378A 1
Yamaha	1994 - 2016	80,100 HP 4-Stroke	64-804378A 1

TELEFLEX NFB SEASTAR PRO HYDRAULIC O/B STEERING

The most popular outboard hydraulic steering system offering smooth, super-efficient No FeedBack Steering designed for today's high performance hulls with single or multiple outboards up to 600 HP combined. SeaStar Pro Steering systems are totally self-contained, non-power-assisted units that make steering a boat a truly enjoyable experience. Their super-efficient hydraulic operations produces an effect most people equate with "power steering". Although some dash modifications are required when you upgrade from a mechanical system, there are no pressure vessels or powers units to mount. 4.0 turns lock-to-lock. SeaStar Pro is suitable for use with jack plates and performance props. Packaged complete with helm, cylinder, fittings, oil, bleeder kit and detailed instruction sheet.

SEASTAR PRO PACKAGE WITHOUT HOSES



64-802903A 1

Front mount outboard steering package. Does not include hoses. Order the correct length hoses separately.

Recommended for applications anticipating speeds of 65 MPH or greater.

SEASTAR PRO HELM



64-851625A 1

SEASTAR PRO TILT HELM



64-853690A 1

SEASTAR HELM MOUNT



64-826484

This kit is designed to mount a SeaStar and SeaStar Pro helm at a 20 degree angle to the mounting surface. Four possible mountings by varying wedge position. No helm modifications are required.

SEASTAR HELM BACK PLATE KIT



64-826483A 1

Allows SeaStar and SeaStar Pro helms retrofit into boats where the following helms were previously installed: SyTen, pre-1991 square SeaStar, or mechanical rotary steering. The kit also reduces helm protrusion by thickness of dash.

FRONT PIVOT MOUNT OUTBOARD CYLINDER



64-804378A 1

FRONT PIVOT MOUNT OUTBOARD CYLINDER



64-889457A01

Fits Mercury 225 EFI FourStroke outboard engine, model year 2002 and newer.

FRONT MOUNT OUTBOARD CYLINDER (STANDARD)



64-826491A 1

SEASTAR PRO HOSE KIT



64-802905A14

2 hoses- 14ft(4.3m)

64-802905A16

2 hoses - 16 ft(4.9m)

64-802905A18

2 hoses - 18ft(5.3)

64-802905A20

2 hoses - 20ft(6.1m)

64-802905A22

2 hoses - 22ft(6.7m)

64-802905A24

2 hoses - 24ft(7.3m)

HOSE CONNECTION KIT



64-826497A 1

Connects 3/8 in.(9.5mm) diameter copper tubing to SeaStar Cylinders (using 3/8 in.[9.5 mm] diameter nylon tubing.

HOSE CONNECTION KIT



64-826498A 1

Connects 3/8 in.(9.5mm) diameter copper tubing to SeaStar Cylinders (using SeaStar Outboard Hoses)

FRONT PIVOT MOUNT CYLINDER CHART

Front Pivot Mount Outboard Cylinder

See Teleflex application guide for additional Information

Brand	Year Range	Model	Front Pivot Mount O/B Cylinder
Honda	1996 - 2016	75-90 HP	64-804378A 1
Honda	1998 - 2016	30-50 HP	64-804378A 1
Johnson/Evinrude	1997 - 2016	65-175 HP	64-804378A 1
Johnson/Evinrude	1991 - 2016	200-225 HP	64-804378A 1
Johnson/Evinrude	1991 - 2016	250-300 HP	64-804378A 1
Johnson/Evinrude	1996 - 2016	90-225 HP Ficht	64-804378A 1
Johnson/Evinrude	1998 - 2016	65-70 HP 4-Stroke	64-804378A 1
Mercury/Mariner	1984 - 1994	2.4/2,5 EFI	64-804378A 1
Mercury/Mariner	1989 - 2016	75-300 HP	64-804378A 1
Mercury/Mariner	1998 - 2016	30-60 HP	64-804378A 1
Mercury	2002 - 2016	225 EFI FourStroke	64-889457A01
Nissan/Tohatsu	1990 - 2016	90-140 HP	64-804378A 1
Suzuki	1986 - 2016	100 HP	64-804378A 1
Suzuki	1986 - 2016	115-140 HP	64-804378A 1
Suzuki	1986 - 2016	150-225 HP	64-804378A 1
Suzuki	1998 - 2016	65-70 HP 4-Stroke	64-804378A 1
U S Marine/Force	1996 - 2016	90-120 HP	64-804378A 1
Yamaha	1997 - 2016	100-225 HP	64-804378A 1
Yamaha	1987 - 2016	225HP	64-804378A 1
Yamaha	1990 - 2016	250 HP	64-804378A 1
Yamaha	1998 - 2016	40-50-60 HP	64-804378A 1
Yamaha	1998 - 2016	70and 90 HP	64-804378A 1
Yamaha	1994 - 2016	80,100 HP 4-Stroke	64-804378A 1

UFLEX OUTBOARD HYDRAULIC STEERING SYSTEMS

Universal front mount outboard steering systems. The most compact design avaiable in the market. Fits most 2 and 4 stroke outboards.

O/B HYDRAULIC STEERING WITHOUT HOSES- PROTECH



64-891665A01

Protech - Complete Front Mount Hydraulic Steering Package without hoses

UFLEX STEERING CYLINDERS, HELMS AND HOSES- MISC

HYDRAULIC HELM PUMP -UH28FM



64-891665A02

UH28FM Helm Pump

HYDRAULIC HOSE - COMPRESSION STYLE FITTINGS



32-8M0053483

New high strength 1500 PSI hose with compression type fittings. Fittings are made of brass with a nickel plating for extra corrision resistance. (14 ft)

Used with 8M0054993/8M0056619 Basic Cylinders as well as the 8M0050097/8M0054145 Heavy Duty systems, Also match to helms 8M0050098/8M0050099 and 8M0056139 thru 8M0056144

32-8M0053484

New high strength 1500 PSI hose with compression type fittings. Fittings are made of brass with a nickel plating for extra corrision resistance. (16 ft)

Used with 8M0054993/8M0056619 Basic Cylinders as well as the 8M0050097/8M0054145 Heavy Duty systems, Also match to helms 8M0050098/8M0050099 and 8M0056139 thru 8M0056144

32-8M0053485

New high strength 1500 PSI hose with compression type fittings. Fittings are made of brass with a nickel plating for extra corrision resistance. (18 ft)

Used with 8M0054993/8M0056619 Basic Cylinders as well as the 8M0050097/8M0054145 Heavy Duty systems, Also match to helms 8M0050098/8M0050099 and 8M0056139 thru 8M0056144

32-8M0053486

New high strength 1500 PSI hose with compression type fittings. Fittings are made of brass with a nickel plating for extra corrision resistance. (20 ft)

Used with 8M0054993/8M0056619 Basic Cylinders as well as the 8M0050097/8M0054145 Heavy Duty systems, Also match to helms 8M0050098/8M0050099 and 8M0056139 thru 8M0056144

32-8M0053487

New high strength 1500 PSI hose with compression type fittings. Fittings are made of brass with a nickel plating for extra corrision resistance. (22 ft)

Used with 8M0054993/8M0056619 Basic Cylinders as well as the 8M0050097/8M0054145 Heavy Duty systems, Also match to helms 8M0050098/8M0050099 and 8M0056139 thru 8M0056144

32-8M0053488

New high strength 1500 PSI hose with compression type fittings. Fittings are made of brass with a nickel plating for extra corrision resistance. (24 ft)

Used with 8M0054993/8M0056619 Basic Cylinders as well as the 8M0050097/8M0054145 Heavy Duty systems, Also match to helms 8M0050098/8M0050099 and 8M0056139 thru 8M0056144

32-8M0053489

New high strength 1500 PSI hose with compression type fittings. Fittings are made of brass with a nickel plating for extra corrision resistance. (26 ft)

Used with 8M0054993/8M0056619 Basic Cylinders as well as the 8M0050097/8M0054145 Heavy Duty systems, Also match to helms 8M0050098/8M0050099 and 8M0056139 thru 8M0056144

32-8M0053474

New high strength 1500 PSI hose with compression type fittings. Fittings are made of brass with a nickel plating for extra corrision resistance. (2 ft)

Used with 8M0054993/8M0056619 "Basic" Cylindersas well as the 8M0050097/8M0054145 "Heavy Duty" systems, Also match to helms 8M0050098/8M0050099 and 8M0056139 thru 8M0056144

HYDRAULIC HELM PUMP -Q/S-TILT



64-891666Q04

Front Mount 2.4 cu in displacement. Approximately 3 turns lock to lock on singles and 6.5 on dual cylinders
Compact design
Tilt Range of 48 Deg and 5 locking positions
Built-in valve for positive rudder lock
Integral relief valve for over pressure protection

Hydraulic Steering for Verado 135 to 200-4 stroke engines
Also can be used on OptiMax with Mercury hydraulic cylinder and hoses

VENTED HELM CAP-VCAP



64-891667Q01

VCAP Vented helm cap for use on Q/S helms 891665Q02 and 891666Q01

NON VENTED CAP



19-898432

Required for dual station installations-

SECOND STATION HOSE AND FITTING KIT-KIT 95 2S



64-891667A03

Kit 95 2S- Hose and fitting kit for second station installations

TELEFLEX NFB SEASTAR REPLACEMENT PARTS

HELM VENTED FILL PLUG



64-826523

Comes with every SeaStar helm. Must be used in all single steering station systems or on the uppermost helm in multiple steering stations.

HELM NON-VENTED FILL PLUG



64-826524

For use on lower station in multi-station systems only. Included with kit 64-826495A 1 (HK5501)

OUTBOARD ADD-A-STATION/AUTOPILOT KIT



64-826495A 1

Contains fittings for adding either a steering station or an autopilot system to an existing SeaStar outboard steering system. Includes 25 ft.(7.3 m) of SeaStar 3/8 in. (9.5 mm) diameter nylon tubing and non-vented fill plug for helm at lower most station.

STERN DRIVE ADD-A-STATION/AUTOPILOT KIT



64-826496A 1

Contains fittings for adding either a steering station or an autopilot system to an existing SeaStar stern drive steering system. Allows use of SeaStar nylon tubing (with SeaStar 1.7 helms only). Includes non-vented fill plug for helm at lower most station.

CYLINDER SEAL KIT



64-826532A 1

Replacement front seal for kit for SeaStar front mount cylinders (HC5340/HC5342/HC5365). Includes 2 seal glands, pin wrench and guide tool.

BOTTLE FILLER KIT



64-826525A 1

For filling and bleeding of the hydraulic system.

TELEFLEX NFB SEASTAR TIE BAR KITS

TIE BAR KIT



64-826507A 2

Includes the adapter plates, tie bar and hardware required to connect twin engines utilizing single or twin front mount outboard cylinder(s) p/n 64-826491A 1(HC5342).

Fits Mercury/Mariner V-6 135-200 HP (1989), 75-250 HP (1990), 75-275 HP (1991 and newer) and Hi-Perf 2.4/2.5L EFI (1995 and newer).

TIE BAR KIT

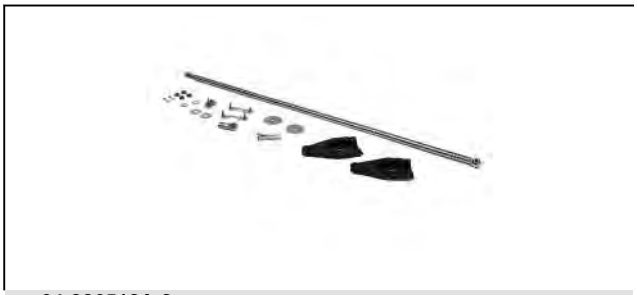

64-826512A 2

Includes the adapter plates, tie bar and hardware required to connect twin engines utilizing single or twin front mount outboard cylinder(s) p/n 64-826491A 1(HC5342).

Fits Mercury/Mariner 90-115 HP (1984), 115-220 (1985-1988), 100-115 (1989). Also fits Johnson/Evinrude 80-225 HP (1991 and newer)

TWIN ENGINE ADAPTER PLATE



64-826511A 2

Replacement adapter plate only. Used to connect twin engines utilizing single or twin front mount outboard cylinder(s) p/n 64-826491A 1(HC5342).

Fits Mercury/Mariner V-6 135-200 HP (1989), 75-250 HP (1990), 75-275 HP (1991 and newer) and Hi-Perf 2.4/2.5L EFI (1995 and newer).

SEASTAR TIE BAR KIT CHART

Tie Bar Kits

For use with old style front mount outboard cylinder 64-826491A 1

Brand	Year Range	Model	Tie Bar Kit - Plate Only
Johnson/Evinrude	2016	90-300 HP	N.L.A.
Johnson/Evinrude	2016	300 HP	N.L.A.
Johnson/Evinrude	2016	65-155 HP	N.L.A.
Johnson/Evinrude	2016	100-155 HP	N.L.A.
Johnson/Evinrude	2016	90-225 HP	64-826512A 2

Brand	Year Range	Model	Tie Bar Kit - Plate Only
Johnson/Evinrude	2016	150-175 HP	64-826512A 2
Johnson/Evinrude	2016	80-105 HP	64-826512A 2
Mercury/Mariner	2016	90-115 HP	64-826512A 2
Mercury/Mariner	2016	115-220 HP	64-826512A 2
Mercury/Marine	2016	135-250 HP	64-826507A 2
Mercury/Mariner	2016	100-115 HP	64-826512A 2
Mercury/Marine	2016	75-250 HP	64-826507A 2
Mercury/Marine	2016	75-250 HP	64-826507A 2
Mercury/Marine	2016	2.4/2,5 EFI(Perf)	64-826507A 2
Suzuki	2016	150-225 HP	N.L.A.
Suzuki	2016	100HP	N.L.A.

RIDEGUIDE ATTACHING KITS

Through tilt tube type. When converting tiller handle steering to remote steering, the existing co-pilot friction control should be disabled or removed.

STEERING LINK ROD KIT



11606A 1

Starboard cable entry.

Fits Mercury/Mariner 6/8/9.9/15 hp. (2 cyl.) 2 cycle outboards (USA 0A197112 and Newer, BEL 9461526 and Newer), 8 hp. 4-Stroke outboards (232 cc) and 9.9 hp. 4-Stroke outboards (0H000058-0H016909).

STEERING LINK ROD KIT



11606A 2

Port cable entry.

Fits Mercury/Mariner 6/8/9.9/15 hp. (2 cyl.) 2 cycle outboards (USA 0A197112 and Newer, BEL 9461526 and Newer), 8 hp. 4-Stroke outboards (232 cc) and 9.9 hp. 4-Stroke outboards (0H000058-0H016909).

STEERING LINK ROD KIT

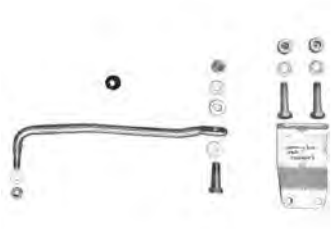

17024A03

Starboard cable entry.

Fits MY2005 & newer 8/9.9 Hp. FourStroke outboards.

STEERING ATTACHING KIT



19608A14

Starboard cable entry.

Fits various Mercury/Mariner 25 thru 60 hp. and Force 40/50 hp. outboards. See application chart for specific engine models.

STEERING ATTACHING KIT



19609A 6

Port cable entry.

Fits various Mercury/Mariner 25 thru 60 hp. and Force 40/50 hp. outboards. See application chart for specific engine models.

STEERING ATTACHING KIT



41323A03

For port or starboard entry.

Fits various Mercury/Mariner 8/9.9/15 hp. 4-Stroke (323 cc) and also fits the 20/25 2-cycle (1984 & newer) outboards.

Will also work as the port entry attaching kit for the Mercury/Mariner 8/9.9 hp. FourStroke (MY 2005 & newer) when used with the Ezy Glide stick steering system. Do not use this link rod with this engine when using the traditional rotary or rack steering systems.

STEERING ATTACHING KIT



89638A 3

Starboard cable entry.

Fits various Mercury/Mariner 35 thru 60 hp. outboards. See application chart for specific engine models.

STEERING LINK ROD KIT



92876A12

Link rod, screw, washers & nuts for use with a starboard entry attaching cable.

Fits Mercury/Mariner V-6 outboards USA 5464486 and above, Force 75-150 outboards 0E093700 and above, 75-115 FourStroke 1B366823 and above, and the 150 EFI FourStroke 1B905505 and above..

ATTACHING KIT



F5H094

For thru tilt tube steering only.

Fits Force 75-150 hp. outboards prior to serial number 0E093700.

STEERING LINK ROD

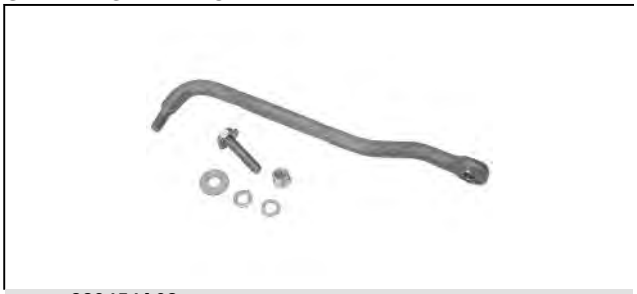

889454A02

Furnished standard with the engine, this kit uses the same link rod as the standard 2-cycle V-6 outboard, however, the attaching hardware is different and makes them not interchangeable.

Fits the 225 EFI FourStroke outboard engine.

STEERING LINK ROD KIT



853824A04

Fits the Mercury/Mariner 15hp. FourStroke outboard, s/n 0R235949 & above and the 20hp. FourStroke outboard, s/n 0R235168 & above.

STEERING LINK ROD KIT



898101A45

This link rod fits a starboard entry, thru-tilt tube mechanical system.

Fits the 25-30 Hp EFI FourStroke outboard (JPN- 0R106999 & above, BEL-0P401000 & above).

STEERING LINK ROD



898101045

Fits the 25-30 Hp EFI FourStroke outboard, serial number 0R106999 & above.

STEERING BRACKET



76535T

Converts manual tiller to remote steering.

Fits Mercury / Mariner 35/45 hp. manual outboards. See application chart for specific engine models.

STEERING BRACKETS

Used with RideGuide attaching kits to convert tiller handle models to remote steering. When converting tiller handle steering to remote steering, the existing co-pilot friction control should be disabled or removed.

STEERING BRACKET WITHOUT CARRYING HANDLE



816667A 2

Fits Mercury/Mariner 30/40 hp. (2 cyl.) 2 cycle outboards (USA 0G055314 and Newer, BEL 9854537 and Newer) and 25/30/40/45/50 hp. 4-Stroke outboards.

STEERING BRACKET



898101189

Part of the 898101A45 Sterring Link Rod Attaching Kit. Furnished standard on the remote models.

Fits the 25/30 EFI FourStroke outboards (JPN 0R106999 & above, BEL 0P401000 & above).

STEERING LINK ROD CHART

Steering Link Rod Attaching Kits

Model	Year Range	Model Notes	Country	Serial # Range	Stbd. Cable Entry Steering Link Rod Attaching Kit	Port Cable Entry Steering Link Rod Attaching Kit	Required Steering Bracket
8 FourStroke	2005 - 2016		JPN	0R042475 and up	17024A03	N/A(3)	N/A
8 FourStroke	2005 - 2016		BEL	0P325500 and up	17024A03	N/A(3)	N/A
9.9	1986 - 2016		USA	0A197112 and up	11606A 1	11606A 2	N/A
9.9	1986 - 2016		BEL	9461526 and up	11606A 1	11606A 2	N/A
9.9 FourStroke	2005 - 2016		JPN	0R042475 and up	17024A03	N/A(3)	N/A
9.9 FourStroke	2005 - 2016		BEL	0P325500 and up	17024A03	N/A(3)	N/A
15	1988 - 2016		USA	0B292414 and up	11606A 1	11606A 2	N/A
15	1988 - 2016		BEL	9542620 and up	11606A 1	11606A 2	N/A
15 FourStroke (Carb)	1998 - 2008	323 cc	USA	0G590000 and up	41323A03	41323A03	N/A
15 FourStroke	2008 - 2016		JPN	0R235949 and up	853824A04		898103138(2)
20 FourStroke	2008 - 2016		JPN	0R235168 and up	853824A04		898103138(2)
25 FourStroke (EFI)	2006 - 2016	Only manual start models require steering bracket	JPN	0R106999 and up	898101A45	N/A(4)	898101189(5)
25 FourStroke (EFI)	2006 - 2016	Only manual start models require steering bracket	BEL	0P401000 and up	898101A45	N/A(4)	898101189(5)

Model	Year Range	Model Notes	Country	Serial # Range	Stbd. Cable Entry Steering Link Rod Attaching Kit	Port Cable Entry Steering Link Rod Attaching Kit	Required Steering Bracket
30 FourStroke (EFI)	2006 - 2016	Only manual start models require steering bracket	JPN	0R106999 and up	898101A45	N/A(4)	898101189(5)
30 FourStroke (EFI)	2006 - 2016	Only manual start models require steering bracket	BEL	0P401000 and up	898101A45	N/A(4)	898101189(5)
40 FourStroke (3 cylinder)	1999 - 2007	Only manual start models require steering bracket	USA	0T409000 - 1B344398	19608A14		893696(2)
40 FourStroke (3 cylinder)	2007 - 2016	Only manual start models require steering bracket	CHN	1C000001 and up	19608A14		893696(2)
40 FourStroke (4 cylinder)	2001 - 2007	BigFoot gearcase 996 cc.	USA	0T178500 - 1B344306	19608A14	19609A 6	816667A 2(2)
40 FourStroke (4 cylinder)	2001 - 2007	BigFoot gearcase 996 cc.	BEL	0P094500 and up	19608A14	19609A 6	816667A 2(2)
40 FourStroke (4 cylinder)	2007 - 2016		CHN	1C000001 and up	19608A14	19609A 6	816667A 2(2)
50 FourStroke (4 cylinder)	2001 - 2007	996 cc.	USA	0T178500 - 1B344306	19608A14	19609A 6	816667A 2(2)
50 FourStroke (4 cylinder)	2001 - 2016	996 cc.	BEL	0P094500 and up	19608A14	19609A 6	816667A 2(2)
50 FourStroke (4 cylinder)	2007 - 2016		CHN	1C000001 and up	19608A14	19609A 6	816667A 2(2)
60 FourStroke	2001 - 2007	996 cc.	USA	0T178500 - 1B344306	19608A14	19609A 6	816667A 2(2)
60 FourStroke	2001 - 2016	996 cc.	BEL	0P094500 and up	19608A14	19609A 6	816667A 2(2)
60 FourStroke	2007 - 2016		CHN	1C000001 and up	19608A14	19609A 6	816667A 2(2)
75-115 FourStroke	2007 - 2016		USA	1B366823 and up	92876A12	N/A	N/A
75-115 FourStroke	2007 - 2016		BEL	0P401000 and up	92876A12	N/A	N/A
135 thru 275 (V-6)	1980 - 2016		USA	5464486 and up	92876A12	N/A	N/A
150 EFI FourStroke	2011 - 2016		USA	1B905505 and up	92876A12	N/A	N/A
135-200 Verado (4 cylinder)	2006 - 2016		USA	1B227001 and up	(6)		
200-300 Verado (6 cylinder)	2005 - 2016		USA	0T980000 and up	(7)		

(1) Bracket part number listed is without carrying handle.

(2) Bracket already furnished on remote models.

(3) When using port entry Ezy Glide stick steering, order attaching kit 41323A 2.

(4) When using port entry Ezy Glide stick steering, order attaching kit 899659A01.

(5) Steering bracket is part of the steering link rod attaching kit.

(6) Hydraulic Steering is standard.

(7) Power Steering is standard.

DUAL CABLE - SINGLE ENGINE ATTACHING KIT

Tension-compression only with both cables installed on the starboard side.

DUAL CABLE ATTACHING KIT



92876A 8

Fits Mercury / Mariner 70-300 hp. outboards (1985 and Newer) and Force 90/120 hp. outboards (1996 and Newer).

DUAL ENGINE TIE BAR KITS

Dual cables are required for installations of 80 hp. (combined total of 160 hp.) or higher.

TIE BAR EXTENSION



8M0026098

Standard Tie Bar Extension Coupler. 15 in.(381 mm). For clearance problems see optional extension couplers.

Fits Mercury/Mariner with standard cowling clearance. Outboard center line distance between 23-1/2 in. thru 27-1/2 in. (597 mm thru 699 mm)

TIE BAR EXTENSION



814951 4

Standard Tie Bar Extension Coupler. 18 in.(458 mm). For clearance problems see optional extension couplers.

Fits Mercury/Mariner with standard cowling clearance. Outboard center line distance between 26-1/2 in. thru 30-1/2 in. (673 mm thru 755 mm)

DUAL ENGINE TIE BAR



92876A 9

Includes 15 in. (381 mm) extension coupler. Adjusts from 22 in. (560 mm) to 26-1/2 in. (675 mm). See extension couplers for additional length.

Fits various Mercury/Mariner 70 thru 3.0 Litre outboards with two piece steering arms.

STEERING ARM EXTENSION KIT



17729A 1

Used with dual engine tie bar kits. Not designed for use with hydraulic or power steering systems or as a primary steering attachment point.

Fits Mercury/Mariner 70/75/80 hp. when installing a single cable-dual engine tie bar kit and included standard in a dual cable-dual engine tie bar kit.

CABLE SEAL KIT

SEAL KIT



19624A 1

Used in outboard applications.

Seals output end of tilt tube, helping to prevent corrosion of the RideGuide cable in a thru tube steering arrangement.

TRANSOM MOUNTED STEERING KITS

For single cable-single engine outboard applications.

CLEVIS KIT



70599A 5

For use with transom mounted bracket.

Fits Mercury 4,5 hp. and Mercury / Mariner 20, 25, 40 (3 cyl.) and 70 thru 200 hp. outboards. Also fits 50/55/60 hp. (3 cyl., USA 0D000750 and Newer, BEL 9682500 and Newer).

OUTBOARD CABLE AND PULLEY ATTACHING KITS

STEERING CABLE ATTACHMENT



12569A 1

Fits Mercury / Mariner 6 thru 15 hp. outboards.

STEERING CABLE ATTACHMENT



17024

Included with remote control attaching kit.

Fits Mercury/Mariner 4/5 hp. outboards (USA 0A855097 and Newer, BEL 9586000 and Newer).

STEERING CABLE ATTACHMENT



82776

Fits Mariner 4/5 hp. (6EO and 6E3 Models) and 15/30/40 hp. (2 cyl.) outboards.

STEERING ARM BRACKET



96186A 2

Used along with cable & pulley attaching kit.

Fits Mercury / Mariner 20/25(2 cyl.) outboards.

STEERING BRACKET



76535T

Converts manual tiller to remote steering.

Fits Mercury / Mariner 35/45 hp. manual outboards. See application chart for specific engine models.

MERCRUISER POWER STEERING KITS

POWER-ASSISTED STEERING KIT



864186A 1

Fits D1.7L diesel (s/n 0M055000-0M999999)

POWER-ASSISTED STEERING KIT



864186A04

Fits 1.7L MS 120 diesel (s/n 88108001 and up)

P/S CYLINDER ASSEMBLY



8M0063381

Power Steering Cylinder Assembly.

Fits 1983 to 1993 R/MR/Alpha One/Gen II & Bravo models

P/S CYLINDER ASSEMBLY



8M0063382

Power Steering Cylinder Assembly. DHB steering system.

Fits 1994 and newer Alpha One Gen II & Bravo models

P/S PUMP AND COOLER KIT



861481A 2

Power Steering Pump and Cooler Kit. For complete installation, order DHB power steering cylinder 866200A01 separately.

Fits 1995 and newer 3.0L/LX (S/N 0F353100 and up)

POWER STEERING KIT



861659A04

Uses the Verado style Power Steering Module & Helm in conjuction with the MCM CHS cylinder.

Fits Alpha and Bravo transoms for engines without power steering pumps.

POWER ASSIST CHS KIT



879273A01

New Power Steering will provide fingertip steering (automotive style) for hard to steer applications that are producing high torque. Kit includes the Verado helm with the CHS cylinder and all of the hardware needed to install. Uses existing engine mounted power steering pump. Order hoses separately 897982K__ kit for cylinders and seperate pressure hose 32-892825 series and return line 32-892438 series hose for pump,helm and cooler. Kit includes a 4 ft pressure hose lead and union for easy installation.

Used with V6 4.3L and Small Block V8 5.0L,5.7L and 6.2L

879273A02

New Power Steering will provide fingertip steering (automotive style) for hard to steer applications that are producing high torque. Kit includes the Verado helm with the CHS cylinder and all of the hardware needed to install. Uses existing engine mounted power steering pump. Order hoses separately 897982K__ kit for cylinders and seperate pressure hose 32-892825 series and return line 32-892438 series hose for pump,helm and cooler. Kit includes a 4 ft pressure hose lead and union for easy installation.

Used with 3.0L MPI and Big Block V8 - 8.1L and 8.2L engines

HOSE RETURN LINE



32-892438002

Hose - Return Line - Power Steering (2 ft)

Used on all Verado Style Power Steering (8892440A series pump) applications to connect to pump as well as MCm the new PS System (879273A01 and A02)

32-892438003

Hose - Return Line - Power Steering (3 Ft)

Used on all Verado Style Power Steering (8892440A series pump) applications to connect to pump as well as MCm the new PS System (879273A01 and A02)

32-892438004

Hose - Return Line - Power Steering (4 ft)

Used on all Verado Style Power Steering (8892440A series pump) applications to connect to pump as well as MCm the new PS System (879273A01 and A02)

32-892438005

Hose - Return Line - Power Steering (5 Ft)

Used on all Verado Style Power Steering (8892440A series pump) applications to connect to pump as well as MCm the new PS System (879273A01 and A02)

32-892438006

Hose - Return Line - Power Steering (6 Ft)

Used on all Verado Style Power Steering (8892440A series pump) applications to connect to pump as well as MCm the new PS System (879273A01 and A02)

32-892438007

Hose - Return Line - Power Steering (7 Ft)

Used on all Verado Style Power Steering (8892440A series pump) applications to connect to pump as well as MCm the new PS System (879273A01 and A02)

32-892438008

Hose - Return Line - Power Steering (8 Ft)

Used on all Verado Style Power Steering (8892440A series pump) applications to connect to pump as well as MCm the new PS System (879273A01 and A02)

32-892438010

Hose - Return Line - Power Steering 10 Ft)

Used on all Verado Style Power Steering (8892440A series pump) applications to connect to pump as well as MCm the new PS System (879273A01 and A02)

32-892438012

Hose - Return Line - Power Steering (12 Ft)

Used on all Verado Style Power Steering (8892440A series pump) applications to connect to pump as well as MCm the new PS System (879273A01 and A02)

32-892438014

Hose - Return Line - Power Steering (14 Ft)

Used on all Verado Style Power Steering (8892440A series pump) applications to connect to pump as well as MCm the new PS System (879273A01 and A02)

32-892438016

Hose - Return Line - Power Steering (16 Ft)

Used on all Verado Style Power Steering (8892440A series pump) applications to connect to pump as well as MCm the new PS System (879273A01 and A02)

32-892438018

Hose - Return Line - Power Steering (18 Ft)

Used on all Verado Style Power Steering (8892440A series pump) applications to connect to pump as well as MCm the new PS System (879273A01 and A02)

32-892438020

Hose - Return Line - Power Steering (20 Ft)

Used on all Verado Style Power Steering (8892440A series pump) applications to connect to pump as well as MCm the new PS System (879273A01 and A02)

32-892438022

Hose - Return Line - Power Steering (22 Ft)

Used on all Verado Style Power Steering (8892440A series pump) applications to connect to pump as well as MCm the new PS System (879273A01 and A02)

32-892438024

Hose - Return Line - Power Steering (24 Ft)

Used on all Verado Style Power Steering (8892440A series pump) applications to connect to pump as well as MCm the new PS System (879273A01 and A02)

32-8M2019252

Hose - Return Line - Power Steering (26 Ft)

Used on all Verado Style Power Steering (8892440A series pump) applications to connect to pump as well as MCm the new PS System (879273A01 and A02)

32-8M2019253

Hose - Return Line - Power Steering (28 Ft)

Used on all Verado Style Power Steering (8892440A series pump) applications to connect to pump as well as MCm the new PS System (879273A01 and A02)

32-8M2019254

Hose - Return Line - Power Steering (30 Ft)

Used on all Verado Style Power Steering (8892440A series pump) applications to connect to pump as well as MCm the new PS System (879273A01 and A02)

MERCRUISER DUAL ENGINE TIE BAR KITS

DUAL ENGINE TIE BAR KIT



92020A 1

Used with power steering cylinder mounted on the starboard transom plate. Adjusts from 16 in.(406 mm) to 30 in.(762 mm)

Fits 1983 and newer R/MR/Alpha One/Gen II and Bravo models, except D7.3L diesel.

92020A 2

Used with power steering cylinder mounted on the starboard transom plate. Adjusts from 30 in.(762 mm) to 46 in.(1168 mm)

Fits 1983 and newer R/MR/Alpha One/Gen II and Bravo models, except D7.3L diesel.

92020A 3

Used with power steering cylinder mounted on the starboard transom plate. Adjusts from 46 in.(1168 mm) to 62 in.(1575 mm)

Fits 1983 and newer R/MR/Alpha One/Gen II and Bravo models, except D7.3L diesel.

DUAL ENGINE TIE BAR KIT



96708A 4

Used with power steering cylinder mounted on the port transom plate. Adjusts from 29 in.(737 mm) to 37-1/2 in.(952 mm)

Fits 1983 and newer R/MR/Alpha One/Gen II and Bravo models, except D7.3L diesel.

DUAL ENGINE TIE BAR KIT



863868A 1

Used with power steering cylinder mounted on the starboard transom plate. Adjusts from 28 in.(711 mm) to 46 in. (1168 mm)

Fits D1.7L diesel engines.

JET DRIVE 135 & 270 DEG. STEERING SYSTEM

The 135 deg. system allows 135 degrees rotation of the steering wheel (3/8 turn lock to lock). The 270 deg. system allows 270 degrees rotation of the steering wheel (3/4 turn lock to lock).Order helm, bezel, and steering cable separately. If the size required is not listed, use the next larger size.

STEERING HELM



809486

135 Degree Steering Helm.

Fits all Sport Jet models, except V-6 models.

STEERING HELM



850699

270 Degree Steering Helm.

Fits all Jet Drive models

TILT STEERING HELM



64-879686

270 Degree Steering Helm.

Fits all Jet Drive models

BEZEL KIT



809485

Fits all Jet Drive models

STEERING CABLE



64-835457A11

11 ft.(3.4 m) 60 series cable with 5/16-24 end threads. Includes steering cable bellows kit.

Fits all Jet Drive models.

64-835457A13

13 ft.(4.0 m) 60 series cable with 5/16-24 end threads. Includes steering cable bellows kit.

Fits all Jet Drive models.

64-835457A15

15 ft.(4.6 m) 60 series cable with 5/16-24 end threads. Includes steering cable bellows kit.

Fits all Jet Drive models.

64-835457A17

17 ft.(5.2 m) 60 series cable with 5/16-24 end threads. Includes steering cable bellows kit.

Fits all Jet Drive models.

64-835457A19

19 ft.(5.8 m) 60 series cable with 5/16-24 end threads. Includes steering cable bellows kit.

Fits all Jet Drive models.

64-835457A21

21 ft.(6.4 m) 60 series cable with 5/16-24 end threads. Includes steering cable bellows kit.

Fits all Jet Drive models.

64-835457A23

23 ft.(7.0 m) 60 series cable with 5/16-24 end threads. Includes steering cable bellows kit.

Fits all Jet Drive models.

64-835457A25

25 ft.(7.6 m) 60 series cable with 5/16-24 end threads. Includes steering cable bellows kit.

Fits all Jet Drive models.

STEERING CABLE BELLOWS



877581A 4

Installs on cable outside of transom

Fits Jet Drive models with 270 Degree system and 60 series cables

JET DRIVE 540 DEG. STEERING SYSTEM

Allows 540 degrees rotation of the steering wheel (1-1/2 turns lock to lock). Includes helm and steering cable. If the size required is not listed, use the next larger size.

REPLACEMENT BEZEL



820728

Fits Sport Jet models

JET DRIVE STEERING CABLE ROD END

STEERING ROD END



883053A 1

For 135 & 540 deg. steering systems. 5/16 in. (7.9 mm)

Fits Sport Jet models with 60 series cables

STEERING CABLE BULKHEAD FITTINGS/ BELLOWS KITS

Hardware used to complete Sport Jet installations. Use either bulkhead fittings or bellows kit. Not for use together.

BULKHEAD COMPRESSION FITTINGS



820675

Fits Sport-Jet 90/95/120 and 175 with 40 series cables. Also fits 200 OptiMax, 210 & 240 EFI Jet Drives.

BULKHEAD BELLOWS KIT



850005A 2

For 135 & 270 deg. steering systems and 60 series cables.
Fits Jet Drive models with 60 series cables

BULKHEAD BELLOWS KIT



850697A 2

Fits Jet Drive models with 40 series cables

THROTTLE AND SHIFT CABLES

THROTTLE AND SHIFT CABLES CHART

Compatibility of throttle/shift cable series to engine models is indicated in the following chart.

Throttle & Shift Cables

Model	850716A_ Cables	64-809894 _ Cables	29564A_ Cables	F195/_ Cables	F5H208/_ Cables	38286A_ Cables	820671A_ Cables (Morse 30 Series)	64-853951A_ Cables with Bellows	858342A_ Cables with Bellows	64-820676A_ Cables
Mercury/Mariner Outboard and MerCruiser MCM/MIE mo	-	-	-	-	-	X	-	-	-	-
MerCruiser (MCM/MIE) Models	X	-	-	-	-	-	-	-	-	-
Mercury/Mariner/Force Current Outboard Engines	X	-	-	-	X(6)	-	-	-	-	X(6)
Mariner 30/40 (2 cyl.) w/ integral oil injection (	X	-	-	-	-	-	-	-	-	-
Mariner 30M (s/n 036668 and above) (Japanese origin	X	-	-	-	-	-	-	-	-	-
Mariner 30 ML (s/n 336184 and above) (Japanese orig	X	-	-	-	-	-	-	-	-	-
Mariner 40 M (s/n 015001 and above) (Japanese origi	X	-	-	-	-	-	-	-	-	-
Mariner 40 ML (s/n 350001 and above) (Japanese orig	X	-	-	-	-	-	-	-	-	-
Mariner 8-60 hp. (Japanese origin) except Mariner	-	X	-	-	X(5)	-	-	-	-	X(5)
Mercury/Mariner 4/5 (Japanese origin)	-	X	-	-	X(5)	-	-	-	-	X(5)
Mercury Outboards pre-1960 (Gear rack style)	-	-	X	-	-	-	-	-	-	-
Force Outboards 1992 and Prior	-	-	-	X(1)	X(2)	-	-	-	-	-
Sport Jet 90/95/120 (1993-1996)(10/32 threaded en	-	-	-	-	-	-	X	-	-	-
Sport Jet 90/95/120 (1993-1996)(1/4-28 threaded e	-	-	-	-	-	-	-	X(4)	-	-
Sport Jet 120XR2 (1999 and Newer) Shift Cables	-	-	-	-	-	-	-	-	X(4)	-
Sport Jet 175 (1999 and Prior) Shift Cables	-	-	-	-	-	-	-	X(4)	-	-
Sport Jet 175 (2000 and Newer) Shift Cables	-	-	-	-	-	-	-	-	X(4)	-
Sport Jet Throttle Cables	-	-	-	-	-	-	-	-	-	X(3)
Mechanical Trim Indicators	-	-	-	-	X	-	-	-	-	X
Zero Effort Controls	-	-	-	-	X	-	-	-	-	X

(1) Connectors are included with this series of cable.

(2) These cables require an FA58976-1 throttle connector and an F58685-2 shift cable connector to complete assembly.

(3) Also requires use of 12505A 1 throttle cable connector.

(4) Includes shift cable bellows kit.

(5) Requires adapter 82779 to convert control end for use.

(6) Requires adapter 12505A 1 to convert engine end and adapter 82779 to convert control end.

GEN I / SAE PREMIUM THROTTLE / SHIFT CABLE

T/S CABLE- GEN I/SAE -PERFORMANCE CABLE



8M0052484

Throttle and shift cable has a stainless steel core with 16 Lay - Flexible core wire. Control end is a traditional Gen I connection and the engine end is a standard SAE threaded end. 5 1 ft (1.5m)

Must be used with a GEN I remote control and fits Mercury/Mariner 4/5 hp. Model Year 1987 and newer, 4/5/6 hp. FourStroke Model Year 1999 and newer, 8/9.9 hp. FourStroke Model Year 2005 and newer outboards, and Mariner 8 thru 60 hp. outboards of Japanese origin.

8M0052485

Throttle and shift cable has a stainless steel core with 16 Lay - Flexible core wire. Control end is a traditional Gen I connection and the engine end is a standard SAE threaded end. 6 ft (1.8m)

Must be used with a GEN I remote control and fits Mercury/Mariner 4/5 hp. Model Year 1987 and newer, 4/5/6 hp. FourStroke Model Year 1999 and newer, 8/9.9 hp. FourStroke Model Year 2005 and newer outboards, and Mariner 8 thru 60 hp. outboards of Japanese origin.

8M0052486

Throttle and shift cable has a stainless steel core with 16 Lay - Flexible core wire. Control end is a traditional Gen I connection and the engine end is a standard SAE threaded end. 7 ft (2.1m)

Must be used with a GEN I remote control and fits Mercury/Mariner 4/5 hp. Model Year 1987 and newer, 4/5/6 hp. FourStroke Model Year 1999 and newer, 8/9.9 hp. FourStroke Model Year 2005 and newer outboards, and Mariner 8 thru 60 hp. outboards of Japanese origin.

8M0052487

Throttle and shift cable has a stainless steel core with 16 Lay - Flexible core wire. Control end is a traditional Gen I connection and the engine end is a standard SAE threaded end. 8 ft (2.4m)

Must be used with a GEN I remote control and fits Mercury/Mariner 4/5 hp. Model Year 1987 and newer, 4/5/6 hp. FourStroke Model Year 1999 and newer, 8/9.9 hp. FourStroke Model Year 2005 and newer outboards, and Mariner 8 thru 60 hp. outboards of Japanese origin.

8M0052488

Throttle and shift cable has a stainless steel core with 16 Lay - Flexible core wire. Control end is a traditional Gen I connection and the engine end is a standard SAE threaded end. 9 ft (2.7m)

Must be used with a GEN I remote control and fits Mercury/Mariner 4/5 hp. Model Year 1987 and newer, 4/5/6 hp. FourStroke Model Year 1999 and newer, 8/9.9 hp. FourStroke Model Year 2005 and newer outboards, and Mariner 8 thru 60 hp. outboards of Japanese origin.

8M0052489

Throttle and shift cable has a stainless steel core with 16 Lay - Flexible core wire. Control end is a traditional Gen I connection and the engine end is a standard SAE threaded end.
10 ft (3.0m)

Must be used with a GEN I remote control and fits Mercury/Mariner 4/5 hp. Model Year 1987 and newer, 4/5/6 hp. FourStroke Model Year 1999 and newer, 8/9.9 hp. FourStroke Model Year 2005 and newer outboards, and Mariner 8 thru 60 hp. outboards of Japanese origin.

8M0052490

Throttle and shift cable has a stainless steel core with 16 Lay - Flexible core wire. Control end is a traditional Gen I connection and the engine end is a standard SAE threaded end.
11 ft (3.4m)

Must be used with a GEN I remote control and fits Mercury/Mariner 4/5 hp. Model Year 1987 and newer, 4/5/6 hp. FourStroke Model Year 1999 and newer, 8/9.9 hp. FourStroke Model Year 2005 and newer outboards, and Mariner 8 thru 60 hp. outboards of Japanese origin.

8M0052491

Throttle and shift cable has a stainless steel core with 16 Lay - Flexible core wire. Control end is a traditional Gen I connection and the engine end is a standard SAE threaded end.
12 ft (3.7m)

Must be used with a GEN I remote control and fits Mercury/Mariner 4/5 hp. Model Year 1987 and newer, 4/5/6 hp. FourStroke Model Year 1999 and newer, 8/9.9 hp. FourStroke Model Year 2005 and newer outboards, and Mariner 8 thru 60 hp. outboards of Japanese origin.

8M0052492

Throttle and shift cable has a stainless steel core with 16 Lay - Flexible core wire. Control end is a traditional Gen I connection and the engine end is a standard SAE threaded end.
13 ft (4.0m)

Must be used with a GEN I remote control and fits Mercury/Mariner 4/5 hp. Model Year 1987 and newer, 4/5/6 hp. FourStroke Model Year 1999 and newer, 8/9.9 hp. FourStroke Model Year 2005 and newer outboards, and Mariner 8 thru 60 hp. outboards of Japanese origin.

8M0052493

Throttle and shift cable has a stainless steel core with 16 Lay - Flexible core wire. Control end is a traditional Gen I connection and the engine end is a standard SAE threaded end.
14 ft (4.3m)

Must be used with a GEN I remote control and fits Mercury/Mariner 4/5 hp. Model Year 1987 and newer, 4/5/6 hp. FourStroke Model Year 1999 and newer, 8/9.9 hp. FourStroke Model Year 2005 and newer outboards, and Mariner 8 thru 60 hp. outboards of Japanese origin.

8M0052494

Throttle and shift cable has a stainless steel core with 16 Lay - Flexible core wire. Control end is a traditional Gen I connection and the engine end is a standard SAE threaded end.
15 ft (4.6m)

Must be used with a GEN I remote control and fits Mercury/Mariner 4/5 hp. Model Year 1987 and newer, 4/5/6 hp. FourStroke Model Year 1999 and newer, 8/9.9 hp. FourStroke Model Year 2005 and newer outboards, and Mariner 8 thru 60 hp. outboards of Japanese origin.

8M0052495

Throttle and shift cable has a stainless steel core with 16 Lay - Flexible core wire. Control end is a traditional Gen I connection and the engine end is a standard SAE threaded end.
16 ft (4.9m)

Must be used with a GEN I remote control and fits Mercury/Mariner 4/5 hp. Model Year 1987 and newer, 4/5/6 hp. FourStroke Model Year 1999 and newer, 8/9.9 hp. FourStroke Model Year 2005 and newer outboards, and Mariner 8 thru 60 hp. outboards of Japanese origin.

8M0052496

Throttle and shift cable has a stainless steel core with 16 Lay - Flexible core wire. Control end is a traditional Gen I connection and the engine end is a standard SAE threaded end.
17 ft (5.2m)

Must be used with a GEN I remote control and fits Mercury/Mariner 4/5 hp. Model Year 1987 and newer, 4/5/6 hp. FourStroke Model Year 1999 and newer, 8/9.9 hp. FourStroke Model Year 2005 and newer outboards, and Mariner 8 thru 60 hp. outboards of Japanese origin.

8M0052497

Throttle and shift cable has a stainless steel core with 16 Lay - Flexible core wire. Control end is a traditional Gen I connection and the engine end is a standard SAE threaded end.
18 ft (5.5m)

Must be used with a GEN I remote control and fits Mercury/Mariner 4/5 hp. Model Year 1987 and newer, 4/5/6 hp. FourStroke Model Year 1999 and newer, 8/9.9 hp. FourStroke Model Year 2005 and newer outboards, and Mariner 8 thru 60 hp. outboards of Japanese origin.

8M0052498

Throttle and shift cable has a stainless steel core with 16 Lay - Flexible core wire. Control end is a traditional Gen I connection and the engine end is a standard SAE threaded end.
19ft (5.8m)

Must be used with a GEN I remote control and fits Mercury/Mariner 4/5 hp. Model Year 1987 and newer, 4/5/6 hp. FourStroke Model Year 1999 and newer, 8/9.9 hp. FourStroke Model Year 2005 and newer outboards, and Mariner 8 thru 60 hp. outboards of Japanese origin.

8M0052499

Throttle and shift cable has a stainless steel core with 16 Lay - Flexible core wire. Control end is a traditional Gen I connection and the engine end is a standard SAE threaded end.
20 ft (6.1m)

Must be used with a GEN I remote control and fits Mercury/Mariner 4/5 hp. Model Year 1987 and newer, 4/5/6 hp. FourStroke Model Year 1999 and newer, 8/9.9 hp. FourStroke Model Year 2005 and newer outboards, and Mariner 8 thru 60 hp. outboards of Japanese origin.

8M0052500

Throttle and shift cable has a stainless steel core with 16 Lay - Flexible core wire. Control end is a traditional Gen I connection and the engine end is a standard SAE threaded end.
21 ft (6.4m)

Must be used with a GEN I remote control and fits Mercury/Mariner 4/5 hp. Model Year 1987 and newer, 4/5/6 hp. FourStroke Model Year 1999 and newer, 8/9.9 hp. FourStroke Model Year 2005 and newer outboards, and Mariner 8 thru 60 hp. outboards of Japanese origin.

8M0052501

Throttle and shift cable has a stainless steel core with 16 Lay - Flexible core wire. Control end is a traditional Gen I connection and the engine end is a standard SAE threaded end.
22 ft (6.7m)

Must be used with a GEN I remote control and fits Mercury/Mariner 4/5 hp. Model Year 1987 and newer, 4/5/6 hp. FourStroke Model Year 1999 and newer, 8/9.9 hp. FourStroke Model Year 2005 and newer outboards, and Mariner 8 thru 60 hp. outboards of Japanese origin.

8M0052502

Throttle and shift cable has a stainless steel core with 16 Lay - Flexible core wire. Control end is a traditional Gen I connection and the engine end is a standard SAE threaded end.
23 ft (7.0m)

Must be used with a GEN I remote control and fits Mercury/Mariner 4/5 hp. Model Year 1987 and newer, 4/5/6 hp. FourStroke Model Year 1999 and newer, 8/9.9 hp. FourStroke Model Year 2005 and newer outboards, and Mariner 8 thru 60 hp. outboards of Japanese origin.

8M0052503

Throttle and shift cable has a stainless steel core with 16 Lay - Flexible core wire. Control end is a traditional Gen I connection and the engine end is a standard SAE threaded end.
24 ft (7.3m)

Must be used with a GEN I remote control and fits Mercury/Mariner 4/5 hp. Model Year 1987 and newer, 4/5/6 hp. FourStroke Model Year 1999 and newer, 8/9.9 hp. FourStroke Model Year 2005 and newer outboards, and Mariner 8 thru 60 hp. outboards of Japanese origin.

8M0052504

Throttle and shift cable has a stainless steel core with 16 Lay - Flexible core wire. Control end is a traditional Gen I connection and the engine end is a standard SAE threaded end.
25 ft (7.6m)

Must be used with a GEN I remote control and fits Mercury/Mariner 4/5 hp. Model Year 1987 and newer, 4/5/6 hp. FourStroke Model Year 1999 and newer, 8/9.9 hp. FourStroke Model Year 2005 and newer outboards, and Mariner 8 thru 60 hp. outboards of Japanese origin.

8M0052505

Throttle and shift cable has a stainless steel core with 16 Lay - Flexible core wire. Control end is a traditional Gen I connection and the engine end is a standard SAE threaded end.
26 ft (7.9m)

Must be used with a GEN I remote control and fits Mercury/Mariner 4/5 hp. Model Year 1987 and newer, 4/5/6 hp. FourStroke Model Year 1999 and newer, 8/9.9 hp. FourStroke Model Year 2005 and newer outboards, and Mariner 8 thru 60 hp. outboards of Japanese origin.

8M0052506

Throttle and shift cable has a stainless steel core with 16 Lay - Flexible core wire. Control end is a traditional Gen I connection and the engine end is a standard SAE threaded end.
27 ft (8.2m)

Must be used with a GEN I remote control and fits Mercury/Mariner 4/5 hp. Model Year 1987 and newer, 4/5/6 hp. FourStroke Model Year 1999 and newer, 8/9.9 hp. FourStroke Model Year 2005 and newer outboards, and Mariner 8 thru 60 hp. outboards of Japanese origin.

8M0052507

Throttle and shift cable has a stainless steel core with 16 Lay - Flexible core wire. Control end is a traditional Gen I connection and the engine end is a standard SAE threaded end.
28 ft (8.5m)

Must be used with a GEN I remote control and fits Mercury/Mariner 4/5 hp. Model Year 1987 and newer, 4/5/6 hp. FourStroke Model Year 1999 and newer, 8/9.9 hp. FourStroke Model Year 2005 and newer outboards, and Mariner 8 thru 60 hp. outboards of Japanese origin.

8M0052508

Throttle and shift cable has a stainless steel core with 16 Lay - Flexible core wire. Control end is a traditional Gen I connection and the engine end is a standard SAE threaded end.
29 ft (8.8m)

Must be used with a GEN I remote control and fits Mercury/Mariner 4/5 hp. Model Year 1987 and newer, 4/5/6 hp. FourStroke Model Year 1999 and newer, 8/9.9 hp. FourStroke Model Year 2005 and newer outboards, and Mariner 8 thru 60 hp. outboards of Japanese origin.

8M0052509

Throttle and shift cable has a stainless steel core with 16 Lay - Flexible core wire. Control end is a traditional Gen I connection and the engine end is a standard SAE threaded end. 30 ft (9.1m)

Must be used with a GEN I remote control and fits Mercury/Mariner 4/5 hp. Model Year 1987 and newer, 4/5/6 hp. FourStroke Model Year 1999 and newer, 8/9.9 hp. FourStroke Model Year 2005 and newer outboards, and Mariner 8 thru 60 hp. outboards of Japanese origin.

PREMIUM T/S CABLES- GEN I - 897977 SERIES

Same great performance as Platinum cables with simular construction. Ends are brass with plating vs SS for Platinum cables.
Flexible contruction (flexible strand with SS armor core wrap) which is ideal for long runs or tight bend requirements.

PREMIUM T/S CABLE- GEN I



897977A03

Premium throttle and shift build with stranded wire with SS armor wrap- 3 ft (.92m)
Brass ends with plating.
Ideal for performance applications as well as installations with various bends
Gen I Controls

897977A04

Premium throttle and shift build with stranded wire with SS armor wrap- 4 ft (1.2 m)
Brass ends with plating.
Ideal for performance applications as well as installations with various bends
Gen I Controls

897977A05

Premium throttle and shift build with stranded wire with SS armor wrap- 5 ft (1.5 m)
Brass ends with plating.
Ideal for performance applications as well as installations with various bends
Gen I Controls

897977A06

Premium throttle and shift build with stranded wire with SS armor wrap- 6 ft (1.8 m)
Brass ends with plating.
Ideal for performance applications as well as installations with various bends
Gen I Controls

897977A07

Premium throttle and shift build with stranded wire with SS armor wrap- 7 ft (2.1 m)
Brass ends with plating.
Ideal for performance applications as well as installations with various bends
Gen I Controls

897977A08

Premium throttle and shift build with stranded wire with SS armor wrap- 8 ft (2.4 m)
Brass ends with plating.
Ideal for performance applications as well as installations with various bends
Gen I Controls

897977A09

Premium throttle and shift build with stranded wire with SS armor wrap- 9 ft (2.7 m)
Brass ends with plating.
Ideal for performance applications as well as installations with various bends
Gen I Controls

897977A10

Premium throttle and shift build with stranded wire with SS armor wrap- 10 ft (3.0 m)
Brass ends with plating.
Ideal for performance applications as well as installations with various bends
Gen I Controls

897977A11

Premium throttle and shift build with stranded wire with SS armor wrap- 11 ft (3.4 m)
Brass ends with plating.
Ideal for performance applications as well as installations with various bends
Gen I Controls

897977A12

Premium throttle and shift build with stranded wire with SS armor wrap- 12 ft (3.7 m)
Brass ends with plating.
Ideal for performance applications as well as installations with various bends
Gen I Controls

897977A13

Premium throttle and shift build with stranded wire with SS armor wrap- 13 ft (4.0 m)
Brass ends with plating.
Ideal for performance applications as well as installations with various bends
Gen I Controls

897977A14

Premium throttle and shift build with stranded wire with SS armor wrap- 14 ft (4.3 m)
Brass ends with plating.
Ideal for performance applications as well as installations with various bends
Gen I Controls

897977A15

Premium throttle and shift build with stranded wire with SS armor wrap- 15 ft (4.6 m)
Brass ends with plating.
Ideal for performance applications as well as installations with various bends
Gen I Controls

897977A16

Premium throttle and shift build with stranded wire with SS armor wrap- 16 ft (4.9 m)
Brass ends with plating.
Ideal for performance applications as well as installations with various bends
Gen I Controls

897977A17

Premium throttle and shift build with stranded wire with SS armor wrap- 17 ft (5.2 m)
Brass ends with plating.
Ideal for performance applications as well as installations with various bends
Gen I Controls

897977A18

Premium throttle and shift build with stranded wire with SS armor wrap- 18 ft (5.5 m)
Brass ends with plating.
Ideal for performance applications as well as installations with various bends
Gen I Controls

897977A19

Premium throttle and shift build with stranded wire with SS armor wrap- 19 ft (5.8 m)
Brass ends with plating.
Ideal for performance applications as well as installations with various bends
Gen I Controls

897977A20

Premium throttle and shift build with stranded wire with SS armor wrap- 20 ft (6.1 m)
Brass ends with plating.
Ideal for performance applications as well as installations with various bends
Gen I Controls

897977A21

Premium throttle and shift build with stranded wire with SS armor wrap- 21 ft (6.4 m)
Brass ends with plating.
Ideal for performance applications as well as installations with various bends
Gen I Controls

897977A22

Premium throttle and shift build with stranded wire with SS armor wrap- 22 ft (6.7 m)
Brass ends with plating.
Ideal for performance applications as well as installations with various bends
Gen I Controls

897977A23

Premium throttle and shift build with stranded wire with SS armor wrap- 23 ft (7.0 m)
Brass ends with plating.
Ideal for performance applications as well as installations with various bends
Gen I Controls

897977A24

Premium throttle and shift build with stranded wire with SS armor wrap- 24 ft (7.3 m)
Brass ends with plating.
Ideal for performance applications as well as installations with various bends
Gen I Controls

897977A25

Premium throttle and shift build with stranded wire with SS armor wrap- 25 ft (7.6 m)
Brass ends with plating.
Ideal for performance applications as well as installations with various bends
Gen I Controls

897977A26

Premium throttle and shift build with stranded wire with SS armor wrap- 26 ft (7.9 m)
Brass ends with plating.
Ideal for performance applications as well as installations with various bends
Gen I Controls

897977A27

Premium throttle and shift build with stranded wire with SS armor wrap- 27 ft (8.2 m)
Brass ends with plating.
Ideal for performance applications as well as installations with various bends
Gen I Controls

897977A28

Premium throttle and shift build with stranded wire with SS armor wrap- 28 ft (8.5 m)
Brass ends with plating.
Ideal for performance applications as well as installations with various bends
Gen I Controls

897977A29

Premium throttle and shift build with stranded wire with SS armor wrap- 29 ft (8.8 m)
Brass ends with plating.
Ideal for performance applications as well as installations with various bends
Gen I Controls

897977A30

Premium throttle and shift build with stranded wire with SS armor wrap- 30 ft (9.2 m)
Brass ends with plating.
Ideal for performance applications as well as installations with various bends
Gen I Controls

897977A32

Premium throttle and shift build with stranded wire with SS armor wrap- 32 ft (9.8 m)
Brass ends with plating.
Ideal for performance applications as well as installations with various bends
Gen I Controls

897977A34

Premium throttle and shift build with stranded wire with SS armor wrap- 34 ft (10.4 m)
Brass ends with plating.
Ideal for performance applications as well as installations with various bends
Gen I Controls

897977A36

Premium throttle and shift build with stranded wire with SS armor wrap- 36 ft (11.0 m)
Brass ends with plating.
Ideal for performance applications as well as installations with various bends
Gen I Controls

897977A38

Premium throttle and shift build with stranded wire with SS armor wrap- 38 ft (11.6 m)
Brass ends with plating.
Ideal for performance applications as well as installations with various bends
Gen I Controls

897977A40

Premium throttle and shift build with stranded wire with SS armor wrap- 40 ft (12.2 m)
Brass ends with plating.
Ideal for performance applications as well as installations with various bends
Gen I Controls

897977A42

Premium throttle and shift build with stranded wire with SS armor wrap- 42 ft (12.8 m)
Brass ends with plating.
Ideal for performance applications as well as installations with various bends
Gen I Controls

897977A44

Premium throttle and shift build with stranded wire with SS armor wrap- 44 ft (13.4 m)
Brass ends with plating.
Ideal for performance applications as well as installations with various bends
Gen I Controls

897977A46

Premium throttle and shift build with stranded wire with SS armor wrap- 46 ft (14.0 m)
Brass ends with plating.
Ideal for performance applications as well as installations with various bends
Gen I Controls

897977A48

Premium throttle and shift build with stranded wire with SS armor wrap- 48 ft (14.6 m)
Brass ends with plating.
Ideal for performance applications as well as installations with various bends
Gen I Controls

897977A50

Premium throttle and shift build with stranded wire with SS armor wrap- 50 ft (15.2 m)
Brass ends with plating.
Ideal for performance applications as well as installations with various bends
Gen I Controls

897977B09

Premium throttle and shift build with stranded wire with SS armor wrap- 9 ft (2.7 m)
Brass ends with plating.
Ideal for performance applications as well as installations with various bends
Bulk package of 24 pcs
Gen I Controls

897977B10

Premium throttle and shift build with stranded wire with SS armor wrap- 10 ft (3.0 m)
Brass ends with plating.
Ideal for performance applications as well as installations with various bends
Bulk package of 24 pcs
Gen I Controls

897977B11

Premium throttle and shift build with stranded wire with SS armor wrap- 11 ft (3.4 m)
Brass ends with plating.
Ideal for performance applications as well as installations with various bends
Bulk package of 24 pcs
Gen I Controls

897977B12

Premium throttle and shift build with stranded wire with SS armor wrap- 12 ft (3.7 m)
Brass ends with plating.
Ideal for performance applications as well as installations with various bends
Bulk package of 24 pcs
Gen I Controls

897977B13

Premium throttle and shift build with stranded wire with SS armor wrap- 13 ft (4.0 m)
Brass ends with plating.
Ideal for performance applications as well as installations with various bends
Bulk package of 24 pcs
Gen I Controls

897977B14

Premium throttle and shift build with stranded wire with SS armor wrap- 14 ft (4.3 m)
Brass ends with plating.
Ideal for performance applications as well as installations with various bends
Bulk package of 24 pcs
Gen I Controls

897977B15

Premium throttle and shift build with stranded wire with SS armor wrap- 15 ft (4.6 m)
Brass ends with plating.
Ideal for performance applications as well as installations with various bends
Bulk package of 24 pcs
Gen I Controls

897977B17

Premium throttle and shift build with stranded wire with SS armor wrap- 17 ft (5.2 m)
Brass ends with plating.
Ideal for performance applications as well as installations with various bends
Bulk package of 24 pcs
Gen I Controls

GEN II/ SAE PREMIUM THROTTLE / SHIFT CABLE

THROTTLE/SHIFT CABLE- GEN II/SAE- PERFORMANCE CABLE



8M0052676

Throttle and shift cable has a stainless steel core with 16 Lay - Flexible cable construction. Control end is a Gen II connection and the engine end is a standard SAE threaded end.
5 ft (1.5m)

Must be used with a GEN II remote control and fits Mercury/Mariner 4/5 hp. Model Year 1987 and newer, 4/5/6 hp. FourStroke Model Year 1999 and newer, 8/9.9 hp. FourStroke Model Year 2005 and newer outboards, and Mariner 8 thru 60 hp. outboards of Japanese origin.

8M0052677

Throttle and shift cable has a stainless steel core with 16 Lay - Flexible cable construction. Control end is a Gen II connection and the engine end is a standard SAE threaded end.
6 ft (1.8m)

Must be used with a GEN II remote control and fits Mercury/Mariner 4/5 hp. Model Year 1987 and newer, 4/5/6 hp. FourStroke Model Year 1999 and newer, 8/9.9 hp. FourStroke Model Year 2005 and newer outboards, and Mariner 8 thru 60 hp. outboards of Japanese origin.

8M0052678

Throttle and shift cable has a stainless steel core with 16 Lay - Flexible cable construction. Control end is a Gen II connection and the engine end is a standard SAE threaded end.
7 ft (2.1m)

Must be used with a GEN II remote control and fits Mercury/Mariner 4/5 hp. Model Year 1987 and newer, 4/5/6 hp. FourStroke Model Year 1999 and newer, 8/9.9 hp. FourStroke Model Year 2005 and newer outboards, and Mariner 8 thru 60 hp. outboards of Japanese origin.

8M0052679

Throttle and shift cable has a stainless steel core with 16 Lay - Flexible cable construction. Control end is a Gen II connection and the engine end is a standard SAE threaded end.
8 ft (2.4m)

Must be used with a GEN II remote control and fits Mercury/Mariner 4/5 hp. Model Year 1987 and newer, 4/5/6 hp. FourStroke Model Year 1999 and newer, 8/9.9 hp. FourStroke Model Year 2005 and newer outboards, and Mariner 8 thru 60 hp. outboards of Japanese origin.

8M0052680

Throttle and shift cable has a stainless steel core with 16 Lay - Flexible cable construction. Control end is a Gen II connection and the engine end is a standard SAE threaded end.
9 ft (2.7m)

Must be used with a GEN II remote control and fits Mercury/Mariner 4/5 hp. Model Year 1987 and newer, 4/5/6 hp. FourStroke Model Year 1999 and newer, 8/9.9 hp. FourStroke Model Year 2005 and newer outboards, and Mariner 8 thru 60 hp. outboards of Japanese origin.

8M0052681

Throttle and shift cable has a stainless steel core with 16 Lay - Flexible cable construction. Control end is a Gen II connection and the engine end is a standard SAE threaded end.
10 ft (3.0m)

Must be used with a GEN II remote control and fits Mercury/Mariner 4/5 hp. Model Year 1987 and newer, 4/5/6 hp. FourStroke Model Year 1999 and newer, 8/9.9 hp. FourStroke Model Year 2005 and newer outboards, and Mariner 8 thru 60 hp. outboards of Japanese origin.

8M0052682

Throttle and shift cable has a stainless steel core with 16 Lay - Flexible cable construction. Control end is a Gen II connection and the engine end is a standard SAE threaded end.
11 ft (3.4m)

Must be used with a GEN II remote control and fits Mercury/Mariner 4/5 hp. Model Year 1987 and newer, 4/5/6 hp. FourStroke Model Year 1999 and newer, 8/9.9 hp. FourStroke Model Year 2005 and newer outboards, and Mariner 8 thru 60 hp. outboards of Japanese origin.

8M0052683

Throttle and shift cable has a stainless steel core with 16 Lay - Flexible cable construction. Control end is a Gen II connection and the engine end is a standard SAE threaded end.
12 ft (3.7m)

Must be used with a GEN II remote control and fits Mercury/Mariner 4/5 hp. Model Year 1987 and newer, 4/5/6 hp. FourStroke Model Year 1999 and newer, 8/9.9 hp. FourStroke Model Year 2005 and newer outboards, and Mariner 8 thru 60 hp. outboards of Japanese origin.

8M0052684

Throttle and shift cable has a stainless steel core with 16 Lay - Flexible cable construction. Control end is a Gen II connection and the engine end is a standard SAE threaded end.
13 ft (4.0m)

Must be used with a GEN II remote control and fits Mercury/Mariner 4/5 hp. Model Year 1987 and newer, 4/5/6 hp. FourStroke Model Year 1999 and newer, 8/9.9 hp. FourStroke Model Year 2005 and newer outboards, and Mariner 8 thru 60 hp. outboards of Japanese origin.

8M0052685

Throttle and shift cable has a stainless steel core with 16 Lay - Flexible cable construction. Control end is a Gen II connection and the engine end is a standard SAE threaded end.
14 ft (4.3m)

Must be used with a GEN II remote control and fits Mercury/Mariner 4/5 hp. Model Year 1987 and newer, 4/5/6 hp. FourStroke Model Year 1999 and newer, 8/9.9 hp. FourStroke Model Year 2005 and newer outboards, and Mariner 8 thru 60 hp. outboards of Japanese origin.

8M0052686

Throttle and shift cable has a stainless steel core with 16 Lay - Flexible cable construction. Control end is a Gen II connection and the engine end is a standard SAE threaded end.
15 ft (4.6m)

Must be used with a GEN II remote control and fits Mercury/Mariner 4/5 hp. Model Year 1987 and newer, 4/5/6 hp. FourStroke Model Year 1999 and newer, 8/9.9 hp. FourStroke Model Year 2005 and newer outboards, and Mariner 8 thru 60 hp. outboards of Japanese origin.

8M0052687

Throttle and shift cable has a stainless steel core with 16 Lay - Flexible cable construction. Control end is a Gen II connection and the engine end is a standard SAE threaded end.
16 ft (4.9m)

Must be used with a GEN II remote control and fits Mercury/Mariner 4/5 hp. Model Year 1987 and newer, 4/5/6 hp. FourStroke Model Year 1999 and newer, 8/9.9 hp. FourStroke Model Year 2005 and newer outboards, and Mariner 8 thru 60 hp. outboards of Japanese origin.

8M0052688

Throttle and shift cable has a stainless steel core with 16 Lay - Flexible cable construction. Control end is a Gen II connection and the engine end is a standard SAE threaded end.
17 ft (5.2m)

Must be used with a GEN II remote control and fits Mercury/Mariner 4/5 hp. Model Year 1987 and newer, 4/5/6 hp. FourStroke Model Year 1999 and newer, 8/9.9 hp. FourStroke Model Year 2005 and newer outboards, and Mariner 8 thru 60 hp. outboards of Japanese origin.

8M0052689

Throttle and shift cable has a stainless steel core with 16 Lay - Flexible cable construction. Control end is a Gen II connection and the engine end is a standard SAE threaded end.
18 ft (5.5m)

Must be used with a GEN II remote control and fits Mercury/Mariner 4/5 hp. Model Year 1987 and newer, 4/5/6 hp. FourStroke Model Year 1999 and newer, 8/9.9 hp. FourStroke Model Year 2005 and newer outboards, and Mariner 8 thru 60 hp. outboards of Japanese origin.

8M0052690

Throttle and shift cable has a stainless steel core with 16 Lay - Flexible cable construction. Control end is a Gen II connection and the engine end is a standard SAE threaded end.
19 ft (5.8m)

Must be used with a GEN II remote control and fits Mercury/Mariner 4/5 hp. Model Year 1987 and newer, 4/5/6 hp. FourStroke Model Year 1999 and newer, 8/9.9 hp. FourStroke Model Year 2005 and newer outboards, and Mariner 8 thru 60 hp. outboards of Japanese origin.

8M0052691

Throttle and shift cable has a stainless steel core with 16 Lay - Flexible cable construction. Control end is a Gen II connection and the engine end is a standard SAE threaded end.
20 ft (6.1m)

Must be used with a GEN II remote control and fits Mercury/Mariner 4/5 hp. Model Year 1987 and newer, 4/5/6 hp. FourStroke Model Year 1999 and newer, 8/9.9 hp. FourStroke Model Year 2005 and newer outboards, and Mariner 8 thru 60 hp. outboards of Japanese origin.

8M0052692

Throttle and shift cable has a stainless steel core with 16 Lay - Flexible cable construction. Control end is a Gen II connection and the engine end is a standard SAE threaded end.
21 ft (6.4m)

Must be used with a GEN II remote control and fits Mercury/Mariner 4/5 hp. Model Year 1987 and newer, 4/5/6 hp. FourStroke Model Year 1999 and newer, 8/9.9 hp. FourStroke Model Year 2005 and newer outboards, and Mariner 8 thru 60 hp. outboards of Japanese origin.

8M0052693

Throttle and shift cable has a stainless steel core with 16 Lay - Flexible cable construction. Control end is a Gen II connection and the engine end is a standard SAE threaded end.
22 ft (6.7m)

Must be used with a GEN II remote control and fits Mercury/Mariner 4/5 hp. Model Year 1987 and newer, 4/5/6 hp. FourStroke Model Year 1999 and newer, 8/9.9 hp. FourStroke Model Year 2005 and newer outboards, and Mariner 8 thru 60 hp. outboards of Japanese origin.

8M0052694

Throttle and shift cable has a stainless steel core with 16 Lay - Flexible cable construction. Control end is a Gen II connection and the engine end is a standard SAE threaded end.
23 ft (7.0m)

Must be used with a GEN II remote control and fits Mercury/Mariner 4/5 hp. Model Year 1987 and newer, 4/5/6 hp. FourStroke Model Year 1999 and newer, 8/9.9 hp. FourStroke Model Year 2005 and newer outboards, and Mariner 8 thru 60 hp. outboards of Japanese origin.

8M0052695

Throttle and shift cable has a stainless steel core with 16 Lay - Flexible cable construction. Control end is a Gen II connection and the engine end is a standard SAE threaded end.
24 ft (7.3m)

Must be used with a GEN II remote control and fits Mercury/Mariner 4/5 hp. Model Year 1987 and newer, 4/5/6 hp. FourStroke Model Year 1999 and newer, 8/9.9 hp. FourStroke Model Year 2005 and newer outboards, and Mariner 8 thru 60 hp. outboards of Japanese origin.

8M0052696

Throttle and shift cable has a stainless steel core with 16 Lay - Flexible cable construction. Control end is a Gen II connection and the engine end is a standard SAE threaded end.
25 ft (7.6m)

Must be used with a GEN II remote control and fits Mercury/Mariner 4/5 hp. Model Year 1987 and newer, 4/5/6 hp. FourStroke Model Year 1999 and newer, 8/9.9 hp. FourStroke Model Year 2005 and newer outboards, and Mariner 8 thru 60 hp. outboards of Japanese origin.

8M0052697

Throttle and shift cable has a stainless steel core with 16 Lay - Flexible cable construction. Control end is a Gen II connection and the engine end is a standard SAE threaded end.
26 ft (7.9m)

Must be used with a GEN II remote control and fits Mercury/Mariner 4/5 hp. Model Year 1987 and newer, 4/5/6 hp. FourStroke Model Year 1999 and newer, 8/9.9 hp. FourStroke Model Year 2005 and newer outboards, and Mariner 8 thru 60 hp. outboards of Japanese origin.

8M0052698

Throttle and shift cable has a stainless steel core with 16 Lay - Flexible cable construction. Control end is a Gen II connection and the engine end is a standard SAE threaded end.
27 ft (8.2m)

Must be used with a GEN II remote control and fits Mercury/Mariner 4/5 hp. Model Year 1987 and newer, 4/5/6 hp. FourStroke Model Year 1999 and newer, 8/9.9 hp. FourStroke Model Year 2005 and newer outboards, and Mariner 8 thru 60 hp. outboards of Japanese origin.

8M0052699

Throttle and shift cable has a stainless steel core with 16 Lay - Flexible cable construction. Control end is a Gen II connection and the engine end is a standard SAE threaded end.
28 ft (8.5m)

Must be used with a GEN II remote control and fits Mercury/Mariner 4/5 hp. Model Year 1987 and newer, 4/5/6 hp. FourStroke Model Year 1999 and newer, 8/9.9 hp. FourStroke Model Year 2005 and newer outboards, and Mariner 8 thru 60 hp. outboards of Japanese origin.

8M0052700

Throttle and shift cable has a stainless steel core with 16 Lay - Flexible core. Control end is a Gen II connection and the engine end is a standard SAE threaded end.
29 ft (8.8m)

Must be used with a GEN II remote control and fits Mercury/Mariner 4/5 hp. Model Year 1987 and newer, 4/5/6 hp. FourStroke Model Year 1999 and newer, 8/9.9 hp. FourStroke Model Year 2005 and newer outboards, and Mariner 8 thru 60 hp. outboards of Japanese origin.

8M0052701

Throttle and shift cable has a stainless steel core with 16 Lay - Flexible Core. Control end is a Gen II connection and the engine end is a standard SAE threaded end.
30 ft (9.2m)

Must be used with a GEN II remote control and fits Mercury/Mariner 4/5 hp. Model Year 1987 and newer, 4/5/6 hp. FourStroke Model Year 1999 and newer, 8/9.9 hp. FourStroke Model Year 2005 and newer outboards, and Mariner 8 thru 60 hp. outboards of Japanese origin.

PREMIUM T/S CABLES- GEN II - 897978

Same great performance as Platinum cables with simular construction.
Ends are brass with plating vs SS for Platinum cables.
Flexible contruction (flexible strand with SS armor core wrap) which is ideal

PREMIUM T/S CABLE- GEN II



897978A03

Premium throttle and shift build with stranded wire with SS armor wrap- 3 ft (.92m)
Brass ends with plating.
Ideal for performance applications as well as installations with various bends
Gen II Controls

897978A04

Premium throttle and shift build with stranded wire with SS armor wrap- 4 ft (1.2 m)
Brass ends with plating.
Ideal for performance applications as well as installations with various bends
Gen II Controls

897978A05

Premium throttle and shift build with stranded wire with SS armor wrap- 5 ft (1.5 m)
Brass ends with plating.
Ideal for performance applications as well as installations with various bends
Gen II Controls

897978A06

Premium throttle and shift build with stranded wire with SS armor wrap- 6 ft (1.8 m)
Brass ends with plating.
Ideal for performance applications as well as installations with various bends
Gen II Controls

897978A07

Premium throttle and shift build with stranded wire with SS armor wrap- 7 ft (2.1 m)
Brass ends with plating.
Ideal for performance applications as well as installations with various bends
Gen II Controls

897978A08

Premium throttle and shift build with stranded wire with SS armor wrap- 8 ft (2.4 m)
Brass ends with plating.
Ideal for performance applications as well as installations with various bends
Gen II Controls

897978A09

Premium throttle and shift build with stranded wire with SS armor wrap- 9 ft (2.7 m)
Brass ends with plating.
Ideal for performance applications as well as installations with various bends
Gen II Controls

897978A11

Premium throttle and shift build with stranded wire with SS armor wrap- 11 ft (3.4 m)
Brass ends with plating.
Ideal for performance applications as well as installations with various bends
Gen II Controls

897978A12

Premium throttle and shift build with stranded wire with SS armor wrap- 12 ft (3.7 m)
Brass ends with plating.
Ideal for performance applications as well as installations with various bends
Gen II Controls

897978A13

Premium throttle and shift build with stranded wire with SS armor wrap- 13 ft (4.0 m)
Brass ends with plating.
Ideal for performance applications as well as installations with various bends
Gen II Controls

897978A14

Premium throttle and shift build with stranded wire with SS armor wrap- 14 ft (4.3 m)
Brass ends with plating.
Ideal for performance applications as well as installations with various bends
Gen II Controls

897978A15

Premium throttle and shift build with stranded wire with SS armor wrap- 15 ft (4.6 m)
Brass ends with plating.
Ideal for performance applications as well as installations with various bends
Gen II Controls

897978A16

Premium throttle and shift build with stranded wire with SS armor wrap- 16 ft (4.9 m)
Brass ends with plating.
Ideal for performance applications as well as installations with various bends
Gen II Controls

897978A17

Premium throttle and shift build with stranded wire with SS armor wrap- 17 ft (5.2 m)
Brass ends with plating.
Ideal for performance applications as well as installations with various bends
Gen II Controls

897978A18

Premium throttle and shift build with stranded wire with SS armor wrap- 18 ft (5.5 m)
Brass ends with plating.
Ideal for performance applications as well as installations with various bends
Gen II Controls

897978A19

Premium throttle and shift build with stranded wire with SS armor wrap- 19 ft (5.8 m)
Brass ends with plating.
Ideal for performance applications as well as installations with various bends
Gen II Controls

897978A20

Premium throttle and shift build with stranded wire with SS armor wrap- 20 ft (6.1 m)
Brass ends with plating.
Ideal for performance applications as well as installations with various bends
Gen II Controls

897978A21

Premium throttle and shift build with stranded wire with SS armor wrap- 21 ft (6.4 m)
Brass ends with plating.
Ideal for performance applications as well as installations with various bends
Gen II Controls

897978A22

Premium throttle and shift build with stranded wire with SS armor wrap- 22 ft (6.7 m)
Brass ends with plating.
Ideal for performance applications as well as installations with various bends
Gen II Controls

897978A23

Premium throttle and shift build with stranded wire with SS armor wrap- 23 ft (7.0 m)
Brass ends with plating.
Ideal for performance applications as well as installations with various bends
Gen II Controls

897978A24

Premium throttle and shift build with stranded wire with SS armor wrap- 24 ft (7.3 m)
Brass ends with plating.
Ideal for performance applications as well as installations with various bends
Gen II Controls

897978A25

Premium throttle and shift build with stranded wire with SS armor wrap- 25 ft (7.6 m)
Brass ends with plating.
Ideal for performance applications as well as installations with various bends
Gen II Controls

897978A26

Premium throttle and shift build with stranded wire with SS armor wrap- 26 ft (7.9 m)
Brass ends with plating.
Ideal for performance applications as well as installations with various bends
Gen II Controls

897978A27

Premium throttle and shift build with stranded wire with SS armor wrap- 27 ft (8.2 m)
Brass ends with plating.
Ideal for performance applications as well as installations with various bends
Gen II Controls

897978A28

Premium throttle and shift build with stranded wire with SS armor wrap- 28 ft (8.5 m)
Brass ends with plating.
Ideal for performance applications as well as installations with various bends
Gen II Controls

897978A29

Premium throttle and shift build with stranded wire with SS armor wrap- 29 ft (8.8 m)
Brass ends with plating.
Ideal for performance applications as well as installations with various bends
Gen II Controls

897978A30

Premium throttle and shift build with stranded wire with SS armor wrap- 30 ft (9.2 m)
Brass ends with plating.
Ideal for performance applications as well as installations with various bends
Gen II Controls

897978A32

Premium throttle and shift build with stranded wire with SS armor wrap- 32 ft (9.8 m)
Brass ends with plating.
Ideal for performance applications as well as installations with various bends
Gen II Controls

897978A34

Premium throttle and shift build with stranded wire with SS armor wrap- 34 ft (10.4 m)
Brass ends with plating.
Ideal for performance applications as well as installations with various bends
Gen II Controls

897978A36

Premium throttle and shift build with stranded wire with SS armor wrap- 36 ft (11.0 m)
Brass ends with plating.
Ideal for performance applications as well as installations with various bends
Gen II Controls

897978A38

Premium throttle and shift build with stranded wire with SS armor wrap- 38 ft (11.6 m)
Brass ends with plating.
Ideal for performance applications as well as installations with various bends
Gen II Controls

897978A40

Premium throttle and shift build with stranded wire with SS armor wrap- 40 ft (12.2 m)
Brass ends with plating.
Ideal for performance applications as well as installations with various bends
Gen II Controls

897978A42

Premium throttle and shift build with stranded wire with SS armor wrap- 42 ft (12.8 m)
Brass ends with plating.
Ideal for performance applications as well as installations with various bends
Gen II Controls

897978A44

Premium throttle and shift build with stranded wire with SS armor wrap- 44 ft (13.4 m)
Brass ends with plating.
Ideal for performance applications as well as installations with various bends
Gen II Controls

897978A46

Premium throttle and shift build with stranded wire with SS armor wrap- 46 ft (14.0 m)
Brass ends with plating.
Ideal for performance applications as well as installations with various bends
Gen II Controls

897978A48

Premium throttle and shift build with stranded wire with SS armor wrap- 48 ft (14.6 m)
Brass ends with plating.
Ideal for performance applications as well as installations with various bends
Gen II Controls

897978A50

Premium throttle and shift build with stranded wire with SS armor wrap- 50 ft (15.2 m)
Brass ends with plating.
Ideal for performance applications as well as installations with various bends
Gen II Controls

897978B08

Premium throttle and shift build with stranded wire with SS armor wrap- 8 ft (2.4 m)
Brass ends with plating.
Ideal for performance applications as well as installations with various bends
Bulk package of 24 pcs
Gen II Controls

897978B09

Premium throttle and shift build with stranded wire with SS armor wrap- 9 ft (2.7 m)
Brass ends with plating.
Ideal for performance applications as well as installations with various bends
Bulk package of 24 pcs
Gen II Controls

897978B10

Premium throttle and shift build with stranded wire with SS armor wrap- 10 ft (3.0 m)
Brass ends with plating.
Ideal for performance applications as well as installations with various bends
Bulk package of 24 pcs
Gen II Controls

897978B12

Premium throttle and shift build with stranded wire with SS armor wrap- 12 ft (3.7 m)
Brass ends with plating.
Ideal for performance applications as well as installations with various bends
Bulk package of 24 pcs
Gen II Controls

897978B13

Premium throttle and shift build with stranded wire with SS armor wrap- 13 ft (4.0 m)
Brass ends with plating.
Ideal for performance applications as well as installations with various bends
Bulk package of 24 pcs
Gen II Controls

897978B14

Premium throttle and shift build with stranded wire with SS armor wrap- 14 ft (4.3 m)
Brass ends with plating.
Ideal for performance applications as well as installations with various bends
Bulk package of 24 pcs
Gen II Controls

897978B15

Premium throttle and shift build with stranded wire with SS armor wrap- 15 ft (4.6 m)
Brass ends with plating.
Ideal for performance applications as well as installations with various bends
Bulk package of 24 pcs
Gen II Controls

897978B16

Premium throttle and shift build with stranded wire with SS armor wrap- 16 ft (4.9 m)
Brass ends with plating.
Ideal for performance applications as well as installations with various bends
Bulk package of 24 pcs
Gen II Controls

897978B17

Premium throttle and shift build with stranded wire with SS armor wrap- 17 ft (5.2 m)
Brass ends with plating.
Ideal for performance applications as well as installations with various bends
Bulk package of 24 pcs
Gen II Controls

897978B18

Premium throttle and shift build with stranded wire with SS armor wrap- 18 ft (5.5 m)
Brass ends with plating.
Ideal for performance applications as well as installations with various bends
Bulk package of 24 pcs
Gen II Controls

897978B19

Premium throttle and shift build with stranded wire with SS armor wrap- 19 ft (5.8 m)
Brass ends with plating.
Ideal for performance applications as well as installations with various bends
Bulk package of 24 pcs
Gen II Controls

897978B20

Premium throttle and shift build with stranded wire with SS armor wrap- 20 ft (6.1 m)
Brass ends with plating.
Ideal for performance applications as well as installations with various bends
Bulk package of 24 pcs
Gen II Controls

897978B22

Premium throttle and shift build with stranded wire with SS armor wrap- 22 ft (6.7 m)
Brass ends with plating.
Ideal for performance applications as well as installations with various bends
Gen II Controls
Priced individually, sold @ multiples of 24

897978B23

Premium throttle and shift build with stranded wire with SS armor wrap- 23 ft (7.0 m)
Brass ends with plating.
Ideal for performance applications as well as installations with various bends
Bulk package of 24 pcs
Gen II Controls

897978B24

Premium throttle and shift build with stranded wire with SS armor wrap- 24 ft (7.3 m)
Brass ends with plating.
Ideal for performance applications as well as installations with various bends
Bulk package of 24 pcs
Gen II Controls

897978B25

Premium throttle and shift build with stranded wire with SS armor wrap- 25 ft (7.6 m)
Brass ends with plating.
Ideal for performance applications as well as installations with various bends
Bulk package of 24 pcs
Gen II Controls

897978B26

Premium throttle and shift build with stranded wire with SS armor wrap- 26 ft (7.9 m)
Brass ends with plating.
Ideal for performance applications as well as installations with various bends
Bulk package of 24 pcs
Gen II Controls

PREMIUM T/S - SAE- 897979 SERIES

Same great performance as Platinum cables with simular construction.
Ends are brass with plating vs SS for Platinum cables.
Flexible contruction (flexible strand with SS armor core wrap) which is ideal

PREMIUM T/S CABLE- SAE/SAE



897979A03
Premium throttle and shift build with stranded wire with SS armor wrap- 3 ft (.92m)
Brass ends with plating.
Ideal for performance applications as well as installations with various bends

897979A04
Premium throttle and shift build with stranded wire with SS armor wrap- 4 ft (1.2 m)
Brass ends with plating.
Ideal for performance applications as well as installations with various bends

897979A05
Premium throttle and shift build with stranded wire with SS armor wrap- 5 ft (1.5 m)
Brass ends with plating.
Ideal for performance applications as well as installations with various bends

897979A06
Premium throttle and shift build with stranded wire with SS armor wrap- 6 ft (1.8 m)
Brass ends with plating.
Ideal for performance applications as well as installations with various bends

897979A07
Premium throttle and shift build with stranded wire with SS armor wrap- 7 ft (2.1 m)
Brass ends with plating.
Ideal for performance applications as well as installations with various bends

897979A08
Premium throttle and shift build with stranded wire with SS armor wrap- 8 ft (2.4 m)
Brass ends with plating.
Ideal for performance applications as well as installations with various bends

897979A09
Premium throttle and shift build with stranded wire with SS armor wrap- 9 ft (2.7 m)
Brass ends with plating.
Ideal for performance applications as well as installations with various bends

897979A10
Premium throttle and shift build with stranded wire with SS armor wrap- 10 ft (3.0 m)
Brass ends with plating.
Ideal for performance applications as well as installations with various bends

897979A11
Premium throttle and shift build with stranded wire with SS armor wrap- 11 ft (3.4 m)
Brass ends with plating.
Ideal for performance applications as well as installations with various bends

897979A12
Premium throttle and shift build with stranded wire with SS armor wrap- 12 ft (3.7 m)
Brass ends with plating.
Ideal for performance applications as well as installations with various bends

897979A13
Premium throttle and shift build with stranded wire with SS armor wrap- 13 ft (4.0 m)
Brass ends with plating.
Ideal for performance applications as well as installations with various bends

897979A14
Premium throttle and shift build with stranded wire with SS armor wrap- 14 ft (4.3 m)
Brass ends with plating.
Ideal for performance applications as well as installations with various bends

897979A15
Premium throttle and shift build with stranded wire with SS armor wrap- 15 ft (4.6 m)
Brass ends with plating.
Ideal for performance applications as well as installations with various bends

897979A16
Premium throttle and shift build with stranded wire with SS armor wrap- 16 ft (4.9 m)
Brass ends with plating.
Ideal for performance applications as well as installations with various bends

897979A17
Premium throttle and shift build with stranded wire with SS armor wrap- 17 ft (5.2 m)
Brass ends with plating.
Ideal for performance applications as well as installations with various bends

897979A18
Premium throttle and shift build with stranded wire with SS armor wrap- 18 ft (5.5 m)
Brass ends with plating.
Ideal for performance applications as well as installations with various bends

897979A19
Premium throttle and shift build with stranded wire with SS armor wrap- 19 ft (5.8 m)
Brass ends with plating.
Ideal for performance applications as well as installations with various bends

897979A20
Premium throttle and shift build with stranded wire with SS armor wrap- 20 ft (6.1 m)
Brass ends with plating.
Ideal for performance applications as well as installations with various bends

897979A21
Premium throttle and shift build with stranded wire with SS armor wrap- 21 ft (6.4 m)
Brass ends with plating.
Ideal for performance applications as well as installations with various bends

897979A22
Premium throttle and shift build with stranded wire with SS armor wrap- 22 ft (6.7 m)
Brass ends with plating.
Ideal for performance applications as well as installations with various bends

897979A23
Premium throttle and shift build with stranded wire with SS armor wrap- 23 ft (7.0 m)
Brass ends with plating.
Ideal for performance applications as well as installations with various bends

897979A24
Premium throttle and shift build with stranded wire with SS armor wrap- 24 ft (7.3 m)
Brass ends with plating.
Ideal for performance applications as well as installations with various bends

897979A25
Premium throttle and shift build with stranded wire with SS armor wrap- 25 ft (7.6 m)
Brass ends with plating.
Ideal for performance applications as well as installations with various bends

897979A26
Premium throttle and shift build with stranded wire with SS armor wrap- 26 ft (7.9 m)
Brass ends with plating.
Ideal for performance applications as well as installations with various bends

897979A27
Premium throttle and shift build with stranded wire with SS armor wrap- 27 ft (8.2 m)
Brass ends with plating.
Ideal for performance applications as well as installations with various bends

897979A28
Premium throttle and shift build with stranded wire with SS armor wrap- 28 ft (8.5 m)
Brass ends with plating.
Ideal for performance applications as well as installations with various bends

897979A29
Premium throttle and shift build with stranded wire with SS armor wrap- 29 ft (8.8 m)
Brass ends with plating.
Ideal for performance applications as well as installations with various bends

897979A30

Premium throttle and shift build with stranded wire with SS armor wrap- 30 ft (9.2 m)
Brass ends with plating.
Ideal for performance applications as well as installations with various bends

897979A32

Premium throttle and shift build with stranded wire with SS armor wrap- 32 ft (9.8 m)
Brass ends with plating.
Ideal for performance applications as well as installations with various bends

897979A34

Premium throttle and shift build with stranded wire with SS armor wrap- 34 ft (10.4 m)
Brass ends with plating.
Ideal for performance applications as well as installations with various bends

897979A36

Premium throttle and shift build with stranded wire with SS armor wrap- 36 ft (11.0 m)
Brass ends with plating.
Ideal for performance applications as well as installations with various bends

897979A38

Premium throttle and shift build with stranded wire with SS armor wrap- 38 ft (11.6 m)
Brass ends with plating.
Ideal for performance applications as well as installations with various bends

897979A40

Premium throttle and shift build with stranded wire with SS armor wrap- 40 ft (12.2 m)
Brass ends with plating.
Ideal for performance applications as well as installations with various bends

897979A42

Premium throttle and shift build with stranded wire with SS armor wrap- 42 ft (12.8 m)
Brass ends with plating.
Ideal for performance applications as well as installations with various bends

897979A44

Premium throttle and shift build with stranded wire with SS armor wrap- 44 ft (13.4 m)
Brass ends with plating.
Ideal for performance applications as well as installations with various bends

897979A46

Premium throttle and shift build with stranded wire with SS armor wrap- 46 ft (14.0 m)
Brass ends with plating.
Ideal for performance applications as well as installations with various bends

897979A50

Premium throttle and shift build with stranded wire with SS armor wrap- 50 ft (15.2 m)
Brass ends with plating.
Ideal for performance applications as well as installations with various bends

897979B12

Premium throttle and shift build with stranded wire with SS armor wrap- 12 ft (3.7 m)
Brass ends with plating.
Ideal for performance applications as well as installations with various bends
Bulk package of 24 pcs

897979B16

Premium throttle and shift build with stranded wire with SS armor wrap- 16 ft (4.9 m)
Brass ends with plating.
Ideal for performance applications as well as installations with various bends
Bulk package of 24 pcs

MORSE 33C SERIES CABLE ADAPTERS

CABLE ADAPTER



82779

To convert control end of Morse 33C style cable to 64-809894- cable application.

CABLE ADAPTER KIT



889355A 1

Adapts throttle/shift cables with 10/32 UNF threaded engine end for use with the 225 EFI FourStroke outboard.

TWO STATION THROTTLE & SHIFT ATTACHING KIT

For use with Dual station Two Lever Controls.

TWO STATION THROTTLE/SHIFT KIT



89645A34

For use in dual MerCruiser control stations. Includes hardware for attaching throttle and shift cables from both stations to the engine. Twin engines require two kits.
Fits MCM/MIE carburetor and EFI (TBI) models

TWO STATION THROTTLE/SHIFT KIT



89645A37

For use in dual MerCruiser control stations. Includes hardware for attaching throttle and shift cables from both stations to the engine. Twin engines require two kits.
Fits MCM/MIE MPI models, except 8.2L engines

TWO STATION THROTTLE/SHIFT KIT



8M0046250

For use in dual MerCruiser control stations. Includes hardware for attaching throttle and shift cables from both stations to the engine. Twin engines require two kits.

Fits MCM/MIE 8.2L models

858342A_ SERIES SHIFT CABLES

SHIFT CABLE



858342A 8

40 series cable with cable end connector. Includes shift cable bellows kit.

Fits Sport-Jet 120XR2 (1999 and newer) and 175 (2000 and newer). Also fits 200 OptiMax, 210 & 240 EFI Jet Drives.

2.4 m (8 ft.)

858342A10

40 series cable with cable end connector. Includes shift cable bellows kit.

Fits Sport-Jet 120XR2 (1999 and newer) and 175 (2000 and newer). Also fits 200 OptiMax, 210 & 240 EFI Jet Drives.

3.0 m (10 ft.)

858342A12

40 series cable with cable end connector. Includes shift cable bellows kit.

Fits Sport-Jet 120XR2 (1999 and newer) and 175 (2000 and newer). Also fits 200 OptiMax, 210 & 240 EFI Jet Drives.

3.7 m (12 ft.)

858342A14

40 series cable with cable end connector. Includes shift cable bellows kit.

Fits Sport-Jet 120XR2 (1999 and newer) and 175 (2000 and newer). Also fits 200 OptiMax, 210 & 240 EFI Jet Drives.

4.3 m (14 ft.)

858342A16

40 series cable with cable end connector. Includes shift cable bellows kit.

Fits Sport-Jet 120XR2 (1999 and newer) and 175 (2000 and newer). Also fits 200 OptiMax, 210 & 240 EFI Jet Drives.

4.9 m (16 ft.)

858342A18

40 series cable with cable end connector. Includes shift cable bellows kit.

Fits Sport-Jet 120XR2 (1999 and newer) and 175 (2000 and newer). Also fits 200 OptiMax, 210 & 240 EFI Jet Drives.

5.5 m (18 ft.)

858342A20

40 series cable with cable end connector. Includes shift cable bellows kit.

Fits Sport-Jet 120XR2 (1999 and newer) and 175 (2000 and newer). Also fits 200 OptiMax, 210 & 240 EFI Jet Drives.

6.1 m (20 ft.)

858342A22

40 series cable with cable end connector. Includes shift cable bellows kit.

Fits Sport-Jet 120XR2 (1999 and newer) and 175 (2000 and newer). Also fits 200 OptiMax, 210 & 240 EFI Jet Drives.

6.7 m (22 ft.)

K PLANES (TRIM TABS)

MECHANICAL TRIM POSITION INDICATORS 1 POINTER

Cables not included with indicator kits. Order 897979A___ .

TRIM POSITION INDICATOR



848444A 6

1 pointer. Bottom cable entry. White faceplate and bezel.
Fits single sterndrive.

848445A 1

1 pointer. Top cable entry. Gray faceplate and black bezel.
Fits single sterndrive.

TRIM POSITION INDICATOR



848445A 6

1 pointer. Top cable entry. White faceplate and bezel.
Fits single sterndrive.

MECHANICAL TRIM POSITION INDICATORS 2 POINTER

Cables not included with indicator kits. Order 897979A___.

TRIM POSITION INDICATOR



845313A 1

2 pointer. Top cable entry. Gray faceplate and black bezel.
Fits twin MCM sterndrives or trim tabs.

TRIM POSITION INDICATOR



845313A 6

2 pointer. Top cable entry. White faceplate and bezel.
Fits twin MCM sterndrives or trim tabs.

TRIM POSITION INDICATOR



845314A 6

2 pointer. Bottom cable entry. White faceplate and bezel.
Fits twin MCM sterndrives or trim tabs.

MECHANICAL TRIM POSITION INDICATORS 3 POINTER

Cables not included with indicator kits. Order 897979A__ cables to proper length.

TRIM POSITION INDICATOR



845765A 6

3 pointer. Top cable entry. White faceplate and bezel.
Fits triple MCM sterndrives or single MCM sterndrive and twin trim tabs.

TRIM POSITION INDICATOR



845766A 6

3 pointer. Bottom cable entry. White faceplate and bezel.
Fits triple MCM sterndrives or single MCM sterndrive and twin trim tabs.

MECHANICAL TRIM POSITION INDICATORS 4 POINTER

Cables not included with indicator kits. Order 897979A___.

TRIM POSITION INDICATOR



845983A 1

4 pointer. Bottom cable entry. Gray faceplate and black bezel.
Fits twin MCM sterndrives and twin trim tabs.

TRIM POSITION INDICATOR



845983A 6

4 pointer. Bottom cable entry. White faceplate and bezel.
Fits twin MCM sterndrives and twin trim tabs.

MECHANICAL TRIM POSITION INDICATORS 5 POINTER

Cables not included with indicator kits. Order F5H208/__ cables or 64-820676A__ cables to proper length.

TRIM POSITION INDICATOR



845457A 1

5 pointer. Bottom cable entry. Gray faceplate and black bezel.
Fits triple MCM sterndrives and twin trim tabs.

TRIM POSITION INDICATOR

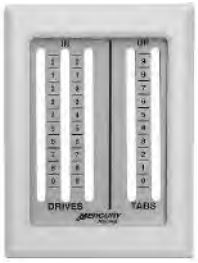

845457A 6

5 pointer. Bottom cable entry. White faceplate and bezel.
Fits triple MCM sterndrives and twin trim tabs.

MECHANICAL TRIM POSITION INDICATOR CHART

Trim Position Indicators

Model	Model Note	Black Bezel Gray Faceplate Bottom Cable Entry	White Bezel White Faceplate Bottom Cable Entry	Black Bezel Gray Faceplate Top Cable Entry	White Bezel White Faceplate Top Cable Entry
1 pointer	1 sterndrive or 1 paralift		848444A 6	848445A 1	848445A 6
2 pointer	2 MCM Alpha - V SSM sterndrives or 2 trim tabs		845314A 6	845313A 1	845313A 6
2 pointer	2 MCM VI - VII SSM sterndrives or 2 trim tabs	845313A 1	845313A 6		845314A 6
3 pointer	3 MCM Alpha - V SSM sterndrives	N.L.A.	845765A 6		845766A 6
3 pointer	3 MCM VI - VII SSM sterndrives or 1 MCM sterndrive		845766A 6	N.L.A.	845765A 6
4 pointer	2 MCM Alpha - V SSM sterndrives and 2 trim tabs	844945A 1	844945A 6	844944A 1	844944A 6
4 pointer	2 MCM VI - VII SSM sterndrives and 2 trim tabs or	845983A 1	845983A 6	N.L.A.	N.L.A.
5 pointer	3 MCM Alpha - V SSM sterndrives and 2 trim tabs	845457A 1	845457A 6	N.L.A.	N.L.A.
5 pointer	3 MCM VI - VII SSM sterndrives and 2 trim tabs or	N.L.A.	N.L.A.	N.L.A.	N.L.A.

K PLANES (TRIM TABS)

SPORT K-PLANES

Each kit contains two K-Planes, two electric/hydraulic pumps, hydraulic cylinders, two harnesses, mounting hardware, installation instructions, drilling and mounting templates. Hoses need to be ordered separately.

SPORT K-PLANES

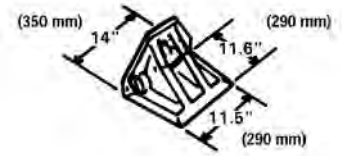

841944A02

Model 150S, assembly with digital trim position sender. To be used with VesselView-Race Edition or Mercury Racing sterndrive engines with 892486K05 (Vessel Analog Gauge Interface) to convert system link data to drive standard analog gauges. For all other applications use optional analog gauge driver P/N 884359A03 to drive two standard analog gauges.

For 21 ft.(6.4 m) to 30 ft.(9.1 m) boats.

SPORT K-PLANES



842768A05

Model 280S, assembly with digital trim position sender. To be used with VesselView-Race Edition or Mercury Racing sterndrive engines with 892486K05 (Vessel Analog Gauge Interface) to convert system link data to drive standard analog gauges. For all other applications use optional analog gauge driver P/N 884359A03 to drive two standard analog gauges.

For 31 ft.(9.4 m) to 40 ft.(12.2 m) boats.

SPORT K-PLANES



841945A02

Model 380S, assembly with digital trim position sender. To be used with VesselView-Race Edition or Mercury Racing sterndrive engines with 892486K05 (Vessel Analog Gauge Interface) to convert system link data to drive standard analog gauges. For all other applications use optional gauge driver P/N 884359A03 to drive two standard analog gauges.

For 31 ft.(9.4 m) to 40 ft.(12.2 m) boats.

HYDRAULIC PUMP



8M0083288

Standard pump for use with Sport K-Planes.

DECK MOUNT KIT - TRIM PUMP



842109A01

Mounting brackets and hardware to mount various Race trim pumps onto horizontal surfaces.

Can be used on Race power trim pumps included with Race Sport K-planes, Race NXT and M series transom plates and Race Optimax 200XS, 200XS ROS, 250XS, 250XS Sport and 300XS outboards. See Mercury electronic parts catalog (EPC) for outboard serial number(s) information.

COMPETITION K-PLANES

Each kit contains two K-Planes, two electric/hydraulic pumps, competition stainless steel hydraulic cylinders, two harnesses, mounting hardware, installation instructions, drilling and mounting templates. Hoses need to be ordered separately.

HYDRAULIC PUMP



846860T 1

Heavy-duty pump for use with Competition K-Planes

ACTUATOR KITS

ACTUATOR KIT



845532A 1

Stainless steel cable grip
Fits old style K-Logo, K-Planes.

ACTUATOR KIT



845630A 1

Plastic cable grip
Fits old style K-Logo, K-Planes.

ACTUATOR KIT



845630A02

Plastic Grip
Fits new style M-Logo, K-Planes.

ACTUATOR KIT



845532A02

Stainless Steel grip
Fits new style M-Logo, K-Planes.

K-PLANES HOSE KITS

K-PLANES HOSE KIT



32-843556A 1

30 inch K-Planes hose kit. Set of 4 hoses with unions in each kit.

32-843675A 1

60 inch K-Planes hose kit. Set of 4 hoses with unions in each kit.

HOSES FOR K-PLANES

Each K-Plane requires four hoses. Priced and sold separately.

K-PLANE HOSE



32-845976

30 in.(76 cm) long

K-PLANE HOSE



32-845977

60 in.(152 cm) long

K-PLANE HOSE



32-846051

96 in.(244 cm) long

K PLANES (TRIM TABS)

K-PLANE HOSE



32-848789
115 in.(292 cm) long

INSTALLATION SPECIFICATIONS AND TOOLS

INSTALLATION AIDS

TRANSOM DRILLING FIXTURE



91- 98234A 2

Used to assist drilling of the holes for the outboard engine transom bracket mounting bolts.

Mercury/Mariner 30/40 hp. & above (2 cycle), 25 hp. Bigfoot & above (4-Stroke), and Force 40 hp. & above (1993 and newer).

CONTROL DRILLING FIXTURE

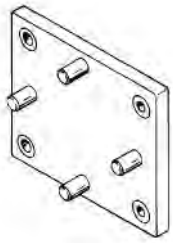

91-828363A 1

Used to assist drilling of the holes for side mount control and panel mount control mounting bolts.

For use with the Commander 2000 side mount and the Commander 3000 panel mount controls.

DRILL FIXTURE KIT



91-866590A02

Used to assist drilling of the holes for the MerCruiser transom plate mounting bolts.

For MCM 1.6L Vazer models.

DRILL FIXTURE KIT



91- 43693A 2

Used to assist drilling of the holes for the MerCruiser transom plate mounting bolts.

For MCM 3.0L to 350 Magnum (Alpha One), Bravo One, Two, Three and Blackhawk models.

ENGINE MOUNTING FIXTURE



91-806794A03

Gasoline engine mount installation tool fixture.

For MerCruiser 1.6L Vazer engines.

ENGINE MOUNTING FIXTURE

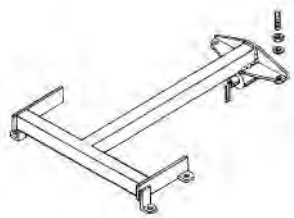

91-806794A02

Gasoline engine mount installation tool fixture.

MerCruiser gasoline engines, except Vazer engines.

91-807903A 1

Diesel engine mount installation tool fixture.

MerCruiser 2.8 ES (s/n 88010499 and below), D3.0 L, D3.6 L; D4.2 MS / ES (s/n 88020199 and below)

ENGINE MOUNTING FIXTURE

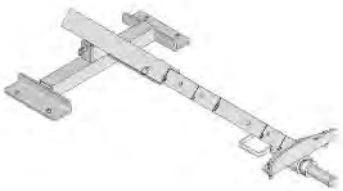

91-8M0084205

Diesel engine mount installation tool fixture.

Fits all QSD 2.0L, 2.8L & 4.2 engines
Also fits 1.7L, 2.8L & 4.2L (Tier 1) engines

ENGINE MOUNTING FIXTURE



91-8M0114831

Primary mount assembly. To be used in conjuction with Mount Fixture 22.5 in.(571 mm) p/n 8M0114832 and/or Mount Fixture 25.2 in.(640 mm) p/n 8M0114833

For use with all Mercury high speed diesel engines

91-8M0114832

Fixture mount assembly. To be used in conjuction with Primary Mount Assemby p/n 8M0114831

For use with all Mercury high speed diesel engines, except the V8 TDI

91-8M0114833

Fixture mount assembly. To be used in conjuction with Primary Mount Assemby p/n 8M0114831

For use with Mercury high speed V8 TDI diesel engines

ALIGNMENT SHAFT



91-805475A 1

For MerCruiser drives, except Vazer drives

ALIGNMENT SHAFT



91-8M0070098

For MerCruiser drives used with the 4.2L TDI engines

91-8M0095093

For MerCruiser 4.2L TDI engines with ITS transoms

ALIGNMENT SHAFT



91-8M2001017

For MerCruiser Vazer drives

PRELIMINARY SHIFT ADJUSTMENT TOOL



91- 12427T

Attaches over the shift cable, and aids in proper shift cable adjustment at the shift plate.

For MCM Bravo One and Bravo Two models.

CENTER LIFTING EYE



863678

Fits MCM/MIE D1.7L DTI diesel engines.

LIFTING EYE - ZEUS POD



10-8M0080049

Attaches to transmission.

For installation or removal of the Zeus Pod Drive

OUTBOARD ENGINE LIFTING EYE



91- 90455 1

Threads into the flywheel to remove the power head assembly from the driveshaft housing, or to lift entire engine for removal/installation.

Fits most 2 cycle Mercury/Mariner Outboards from the 30/40 (2 cyl.) on up.

OUTBOARD ENGINE LIFTING EYE/FLYWHEEL PULLER



91- 83164M

Threads into flywheel and is also used as a flywheel puller.

Fits numerous outboard products including the 40/45/50/60 (4 cyl. - 4-Stroke) and the 75/90/115 FourStroke (s/n 1B366822 and below) outboard engines.

LIFTING EYE/FLYWHEEL PULLER



91-895343T02

A combination tool utilized for both lifting the engine and for pulling the flywheel.

Fits the 75-115 hp. FourStroke outboards (s/n 1B366823 and above), 135-300 hp. Verado outboards and the F150 EFI FourStroke outboard.

OUTBOARD TRANSOM MOUNTING SPECIFICATIONS

For Model Year 2000 Mercury/Mariner Outboard Engines.

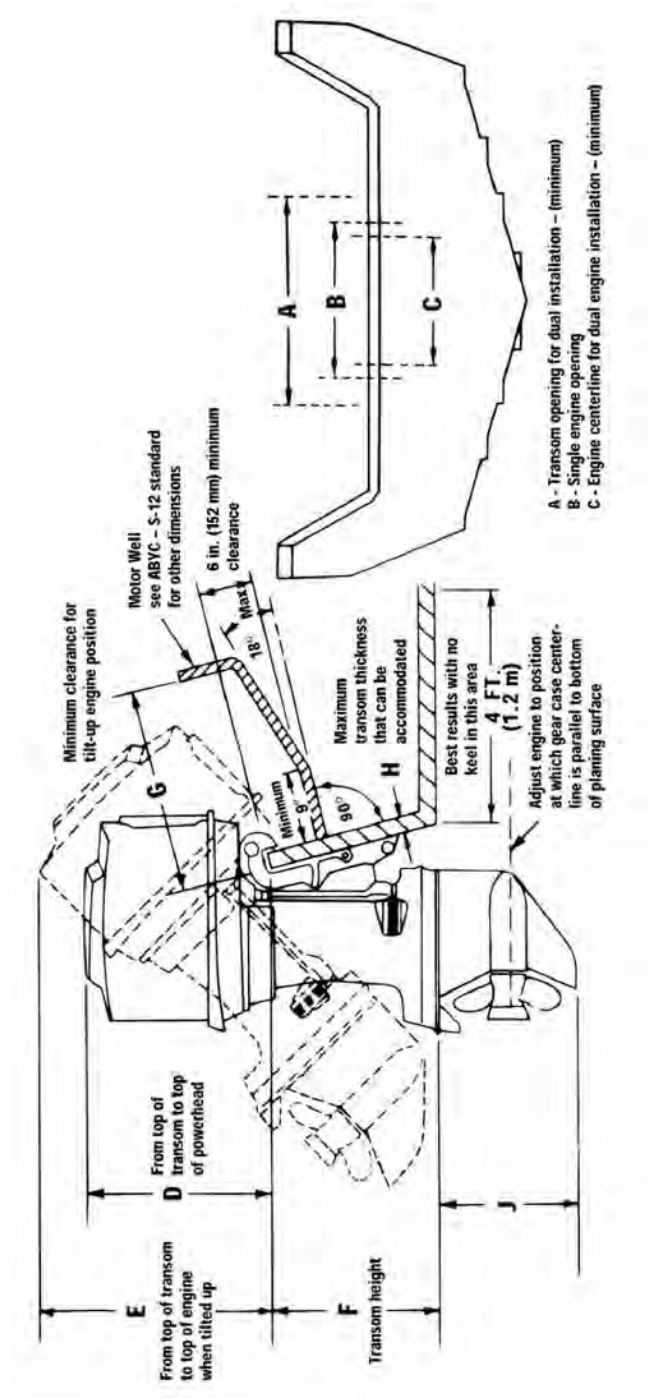

Transom Specs 2-Stroke

Model	Min. A	Min. B	Min. C (1)	Min. D	Min. E	F. Short Shaft (2)	F. Long Shaft (2)	F. XL Shaft (2)	G	H	J
2.5/3.3		23 in. (584 mm)		12 in. (304 mm)	18 in. (457 mm)	15 in. (381 mm)	20 in. (508mm		8-1/2 in. (216 mm)	2-3/8 in. (60 mm)	11-3/4 in. (298 mm)
4 & 5		16 in. (406mm		12-3/4 in. (324 mm)	17-3/4 in. (451 mm)	15 in. (381 mm)	20 in. (508 mm)	25 in. (635 mm)	22 in. (559 mm)	2-1/4 in. (57 mm)	9-7/8 in. (251 mm)
6/8/9.9/15		23 in. (584 mm)		12-1/2 in. (317 mm)	20 in. (508 mm)	17-3/4 in. (451 mm)	23-3/4 in. (603 mm)	28-3/4 in. (730 mm)	15 in. (381mm	2-3/8 in. (60 mm)	10 in. (254 mm)
20/25		22-3/4 in. (579 mm)		14-1/2 in. (368 mm)	21-1/2 in. (561 mm)	17 in. (432 mm)	22 in. (558 mm)		13-3/4 in. (349 mm)	2-1/4 in. (57 mm)	11 in. (279 mm)
30/40 (2 cyl.)	59 in. (1499 mm)	32-1/2 in. (825 mm)	22-1/2 in. (571 mm)	18-3/8 in. (467 mm)	25-5/8 in. (651 mm)	15-1/2 in. (394 mm)	20 in. (508 mm)	22-1/2 in. (571 mm)	17-1/4 in. (498 mm)	2-3/8 in. (60 mm)	13-1/4 in. (337 mm)
40/50 (3 cyl.) w/ tiller handle	40 in. (1016 mm)	30 in. (762 mm)	22-1/2 in. (571 mm)	21-5/8 in. (549 mm)	27-3/4 in. (705 mm)	15-1/2 in. (394 mm)	20 in. (508 mm)		21-1/2 in. (546 mm)	2-3/8 in. (60 mm)	13-1/4 in. (337 mm)
40/50 (3 cyl.) w/ rem. Control	40 in. (1016 mm)	19 in. (483 mm)	22-1/2 in. (571 mm)	21-5/8 in. (549 mm)	27-3/4 in. (705 mm)	15-1/2 in. (394 mm)	20 in. (508 mm)		21-1/2 in. (546 mm)	2-3/8 in. (60 mm)	13-1/4 in. (337 mm)
55/60 (std. g/c) w/tiller handle		30 in. (762 mm)		20-1/8 in. (511 mm)	28-5/8 in. (727 mm)	16-1/4 in. (413 mm)	20-3/4 in. (527 mm)		21-3/4 in. (552 mm)	2-3/8 in. (60 mm)	13-3/4 in. (349 mm)
55/60 BigFoot w/tiller handle		30 in. (762 mm)		20-1/8 in. (511 mm)	28-5/8 in. (727 mm)	16-1/4 in. (413 mm)	20-3/4 in. (527 mm)		21-3/4 in. (552 mm)	2-3/8 in. (60 mm)	16-1/2 in. (419 mm)
55/60 (std. g/c) w/rem. Control	40 in. (1016 mm)	19 in. (483 mm)	22-1/2 in. (571 mm)	20 in. (508 mm)	28-3/8 in. (721 mm)	15-3/4 in. (400 mm)	20-1/2 in. (521 mm)		19-3/4 in. (501 mm)	2-3/8 in. (60 mm)	13-3/4 in. (349 mm)
55/60 BigFoot w/rem. Control	40 in. (1016 mm)	19 in. (483 mm)	22-1/2 in. (571 mm)	20 in. (508 mm)	28-3/8 in. (721 mm)	15-3/4 in. (400 mm)	20-1/2 in. (521 mm)		19-3/4 in. (501 mm)	2-3/8 in. (60 mm)	16-1/2 in. (419 mm)
75/90 (3 cyl.)	59 in. (1499 mm)	32-1/2 in. (825 mm)	22-1/2 in. (571 mm)	20-1/8 in. (511 mm)	30-7/8 in. (784 mm)		21-5/8 in. (550 mm)	26-5/8 in. (676 mm)	24-1/2 in. (622 mm)	3 in. (76 mm)	16-5/16 in. (414 mm)
100-125 (4 cyl.)	59 in. (1499 mm)	32-1/2 in. (825 mm)	22-1/2 in. (571 mm)	26-9/16 in. (675 mm)	33-5/8 in. (854 mm)		21-5/8 in. (550 mm)	26-5/8 in. (676 mm)	29 in. (767 mm)	3 in. (76 mm)	16-5/16 in.
135-200 (V-6) 2.0L/2.5L	59-3/4 in. (1518 mm)	33-3/8 in. (848 mm)	26 in. (660 mm)	25-1/2 in. (648 mm)	33-1/2 in. (851 mm)		20-1/4 in. (514 mm)	25-1/4 in. (641 mm)	27-5/8 in. (702 mm)	2-3/8 in. (60 mm)	17-1/2 in. (444 mm)
115-135-150 Opimax	59-3/4 in. (1518 mm)	33-3/8 in. (848 mm)	26 in. (660 mm)	25-1/2 in. (648 mm)	34-1/4 in. (870 mm)		20-1/4 in. (514 mm)	25-1/4 in. (641 mm)	26 in. (660 mm)	2-3/8 in. (60 mm)	17-1/2 in. (444 mm)
225/250 (3.0L)	59-3/4 in. (1518 mm)	33-3/8 in. (848 mm)	26 in. (660 mm)	30-3/8 in. (772 mm)	38-1/2 in. (978 mm)		20-1/4 in. (514 mm)	25-1/4 in. (641 mm)	30-1/2 in. (775 mm)	2-3/8 in. (60 mm)	16-1/2 in. (419 mm)
200/225 Opimax	59-3/4 in. (1518 mm)	33-3/8 in. (848 mm)	26 in. (660 mm)	30-3/8 in. (772 mm)	38-1/2 in. (978 mm)		20-1/4 in. (514 mm)	25-1/4 in. (641 mm)	30-1/2 in. (775 mm)	2-3/8 in. (60 mm)	16-1/2 in. (419 mm)

Transom Specs 4-Stroke

Model	Min. A	Min. B	Min. C (1)	Min. D	Min. E	F. Short Shaft (2)	F. Long Shaft (2)	F. XL Shaft (2)	G	H	J
9.9/15 (std. g/c)		23 in. (584 mm)		14 3/4 in. (375 mm)	24 in. (610 mm)	15 7/8 in. (403 mm)	21 3/8 in. (543 mm)		19 in. (483 mm)	2 3/8 in. (60 mm)	10 in. (254 mm)
9.9/15 BigFoot		23 in. (584 mm)		14 3/4 in. (375 mm)	24 in. (610 mm)		21 3/8 in. (543 mm)	26 7/8 in. (863 mm)	19 in. (483 mm)	2 3/8 in. (60 mm)	11 1/16 in. (406 mm)
25 BigFoot w/ tiller handle	40 in. (1016 mm)	30 in. (483 mm)	22 1/2 in. (572 mm)	17 5/8 in. (448 mm)	28 1/8 in. (714 mm)	16 in. (406 mm)	20 in. (508 mm)	22 1/2 in. (572 mm)	23 in. (584 mm)	2 3/4 in. (70 mm)	13 1/4 in. (337 mm)
25 BigFoot w/rem. Control	40 in. (1016 mm)	19 in. (483 mm)	22 1/2 in. (572 mm)	17 5/8 in. (448 mm)	28 1/8 in. (714 mm)	16 in. (406 mm)	20 in. (508 mm)	22 1/2 in. (572 mm)	23 in. (584 mm)	2 3/4 in. (70 mm)	13 1/4 in. (337 mm)
30/40 (std. g/c) w/tiller handle	40 in. (1016 mm)	30 in. (483 mm)	22 1/2 in. (572 mm)	20 1/8 in. (511 mm)	29 in. (737 mm)	16 in. (406 mm)	20 in. (508 mm)	22 1/2 in. (572 mm)	28 in. (711 mm)	2 3/4 in. (70 mm)	13 1/4 in. (337 mm)
30/40 (std. g/c) w/rem. control	40 in. (1016 mm)	19 in. (483 mm)	22 1/2 in. (572 mm)	20 1/8 in. (511 mm)	29 in. (737 mm)	16 in. (406 mm)	20 in. (508 mm)	22 1/2 in. (572 mm)	28 in. (711 mm)	2 3/4 in. (70 mm)	13 1/4 in. (337 mm)
30/40 BigFoot w/tiller handle	40 in. (1016 mm)	30 in. (483 mm)	22 1/2 in. (572 mm)	20 1/8 in. (511 mm)	29 in. (737 mm)		21 3/8 in. (543 mm)	26 3/8 in. (670 mm)	28 in. (711 mm)	2 3/4 in. (70 mm)	16 3/8 in. (416 mm)
30/40 BigFoot w/rem. Control	40 in. (1016 mm)	19 in. (483 mm)	22 1/2 in. (572 mm)	20 1/8 in. (511 mm)	29 in. (737 mm)		21 3/8 in. (543 mm)	26 3/8 in. (670 mm)	28 in. (711 mm)	2 3/4 in. (70 mm)	16 3/8 in. (416 mm)
50 (std. g/c) w/tiller handle	40 in. (1016 mm)	30 in. (483 mm)	22 1/2 in. (572 mm)	23 in. (584 mm)	30 in. (483 mm)	16 in. (406 mm)	20 in. (508 mm)	22 1/2 in. (572 mm)	28 in. (711 mm)	2 3/4 in. (70 mm)	13 1/4 in. (337 mm)
50 (std. g/c) w/rem. Control	40 in. (1016 mm)	19 in. (483 mm)	22 1/2 in. (572 mm)	23 in. (584 mm)	30 in. (483 mm)	16 in. (406 mm)	20 in. (508 mm)	22 1/2 in. (572 mm)	28 in. (711 mm)	2 3/4 in. (70 mm)	13 1/4 in. (337 mm)
50 BigFoot w/tiller handle	40 in. (1016 mm)	30 in. (483 mm)	22 1/2 in. (572 mm)	23 in. (584 mm)	30 in. (483 mm)		21 3/8 in. (543 mm)	26 3/8 in. (670 mm)	28 in. (711 mm)	2 3/4 in. (70 mm)	16 3/8 in. (416 mm)
50 BigFoot w/rem. Control	40 in. (1016 mm)	19 in. (483 mm)	22 1/2 in. (572 mm)	23 in. (584 mm)	30 in. (483 mm)		21 3/8 in. (543 mm)	26 3/8 in. (670 mm)	28 in. (711 mm)	2 3/4 in. (70 mm)	16 3/8 in. (416 mm)
75/90	59 in. (1499 mm)	33 in. (838 mm)	26 in. (660 mm)	24-3/4 in. (629 mm)	35 in. (889 mm)		21 3/8 in. (543 mm)		26 in. (660 mm)	3 in. (76 mm)	16 3/8 in. (416 mm)

INSTALLATION SPECIFICATIONS AND TOOLS

COMMANDER 3000/4000 PANEL MOUNT CONTROLS SCHEMATIC

MerCruiser or Outboard applications, either with or without power trim.

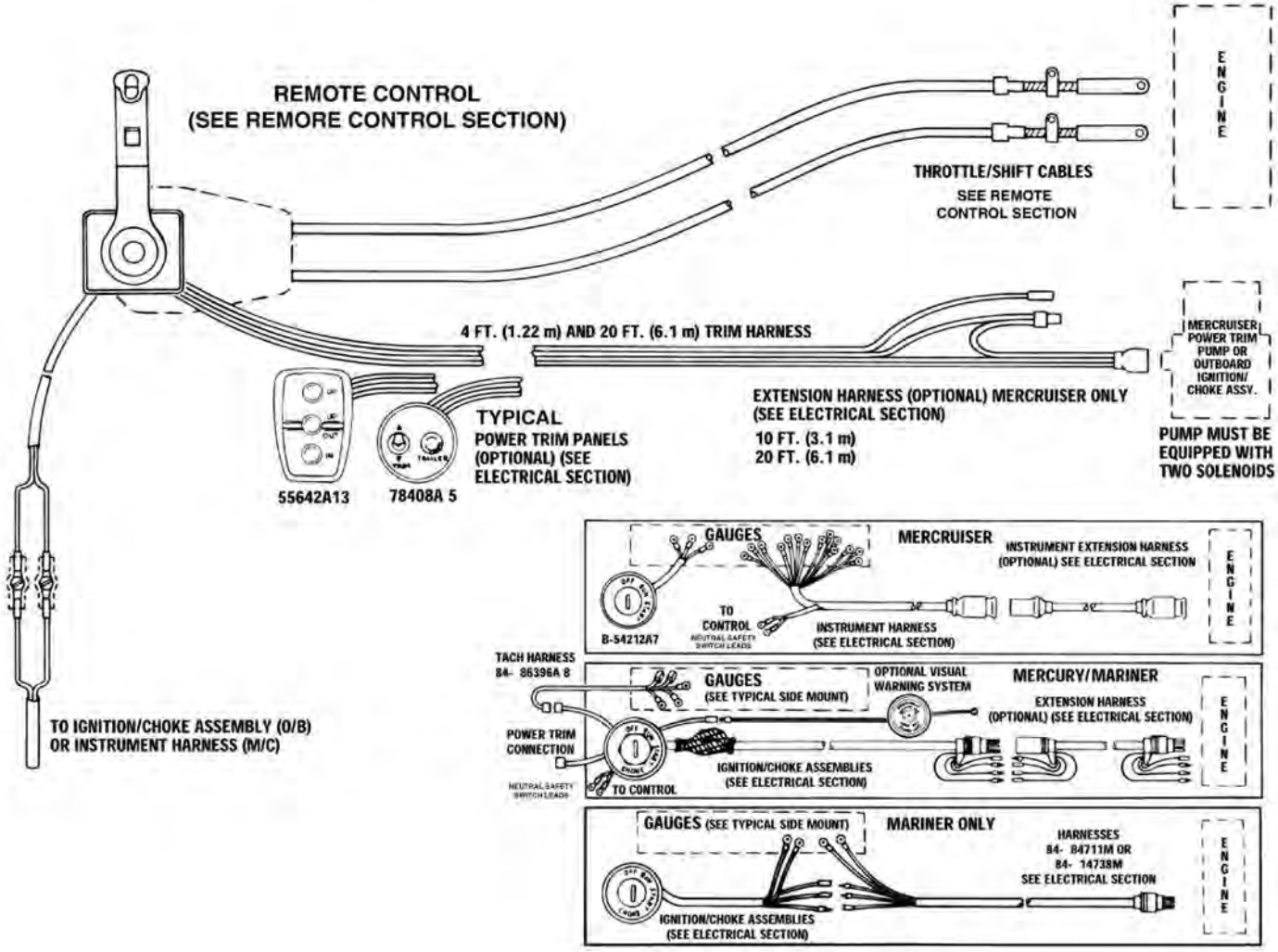

COMMANDER/3000/4000 CONSO MOUNT CONTROLS SCHEMATIC

MerCruiser or Outboard applications, either with or without power trim.

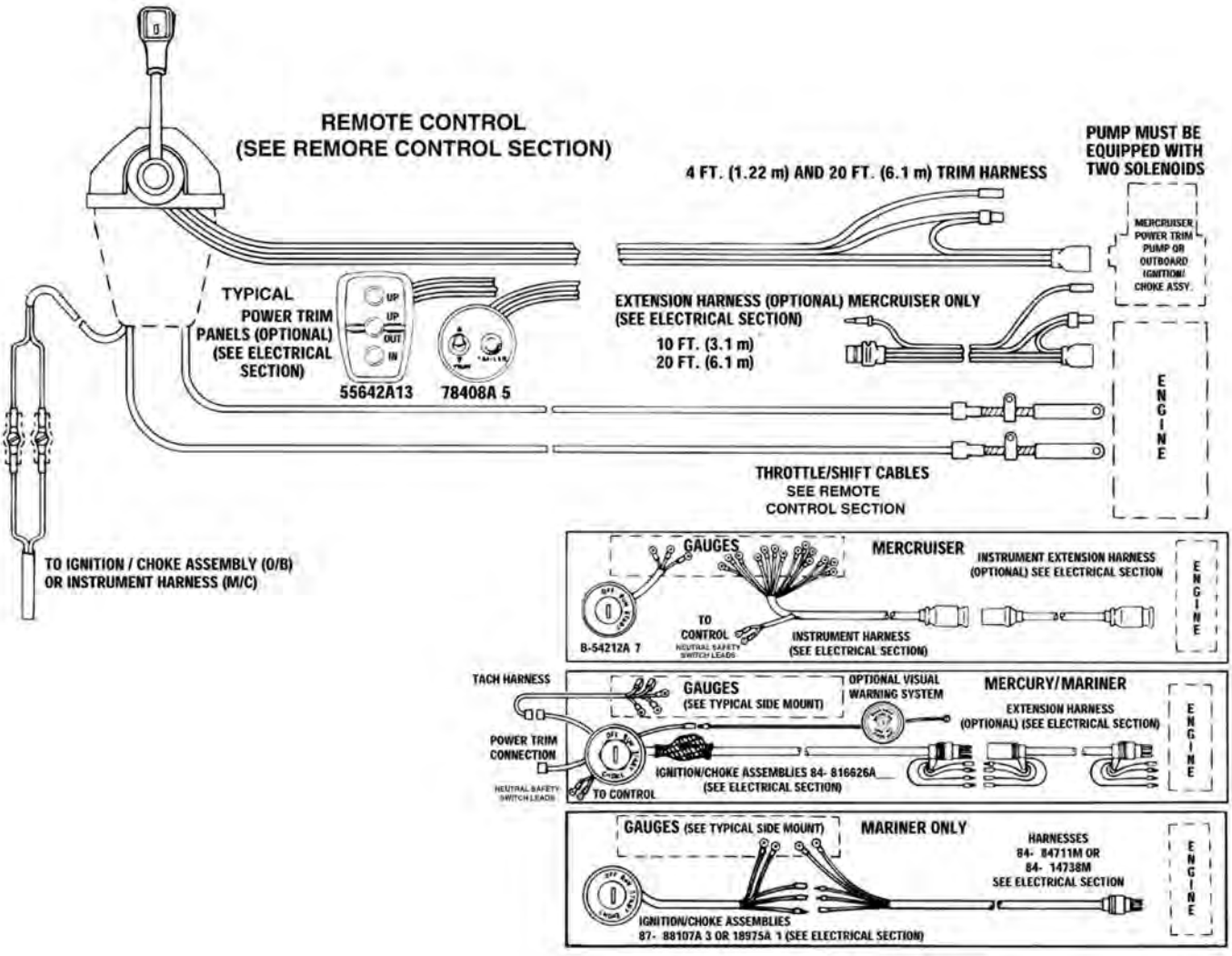

MSC 4000 SIDE MOUNT CONTROL SCHEMATIC

-Manual Start Outboards

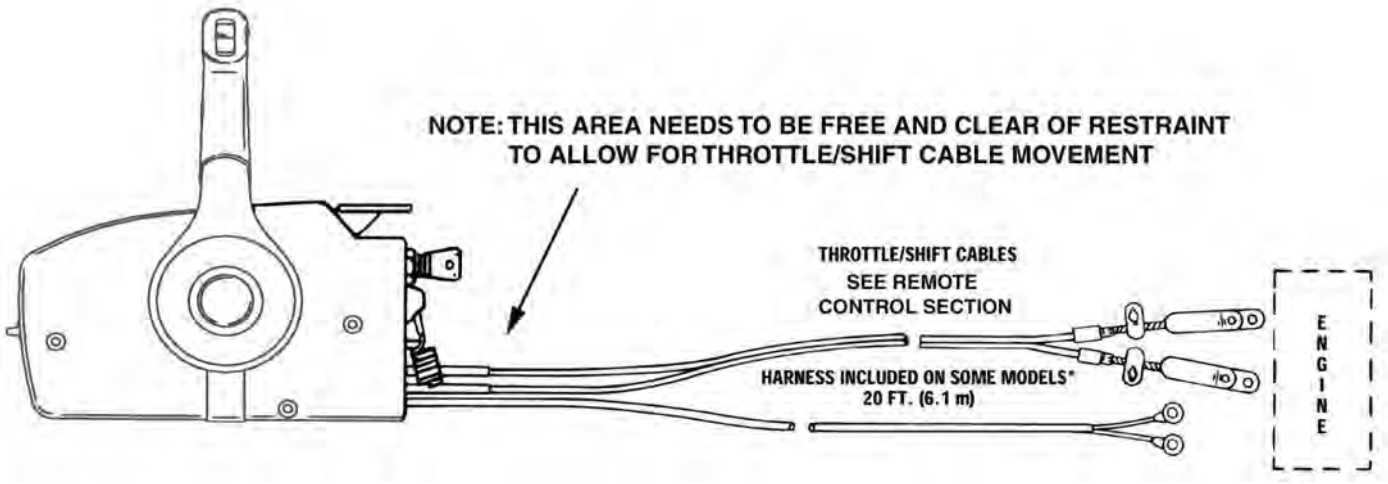

MY 2005 & NEWER F8/9.9 MANUAL SIDE MOUNT SCHEMATIC

Model Year 2005 and Newer 8/9.9 hp. FourStroke Outboards when using a manual start with toggle stop switch.

MSC Side Mount Control 881170A 4 may be used as indicated below.

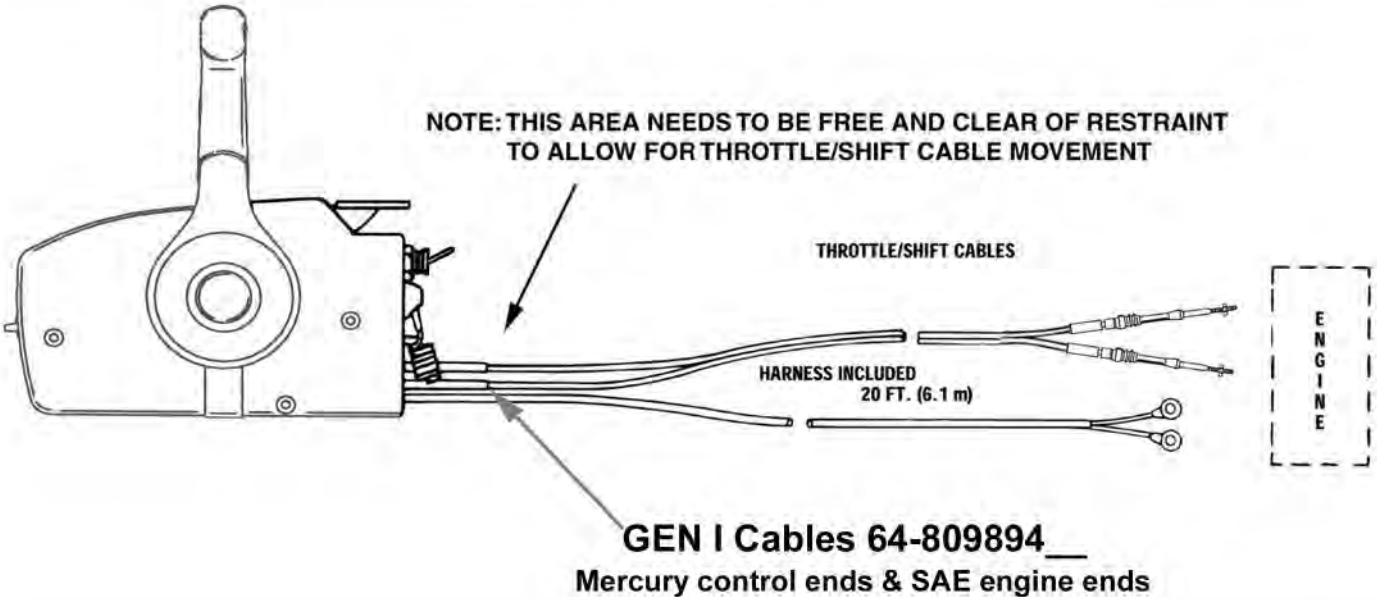

GEN I Cables 64-809894__
Mercury control ends & SAE engine ends

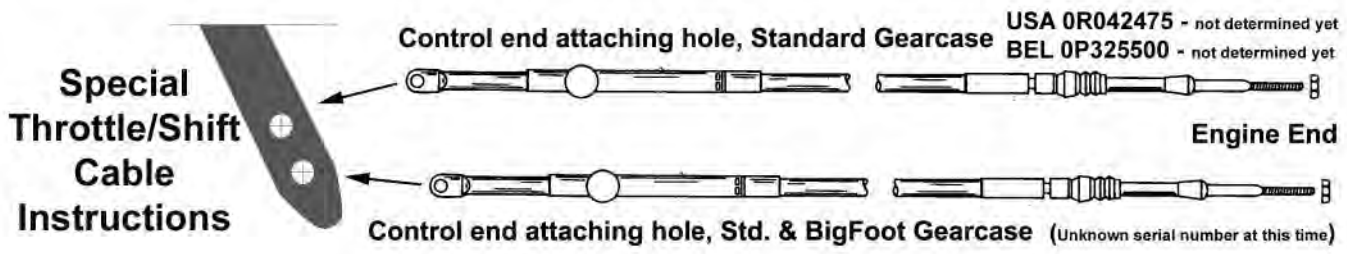

MSC 4000 SIDE MOUNT CONTROL SCHEMATIC

-Electric Start Outboards (with or without Power Trim)

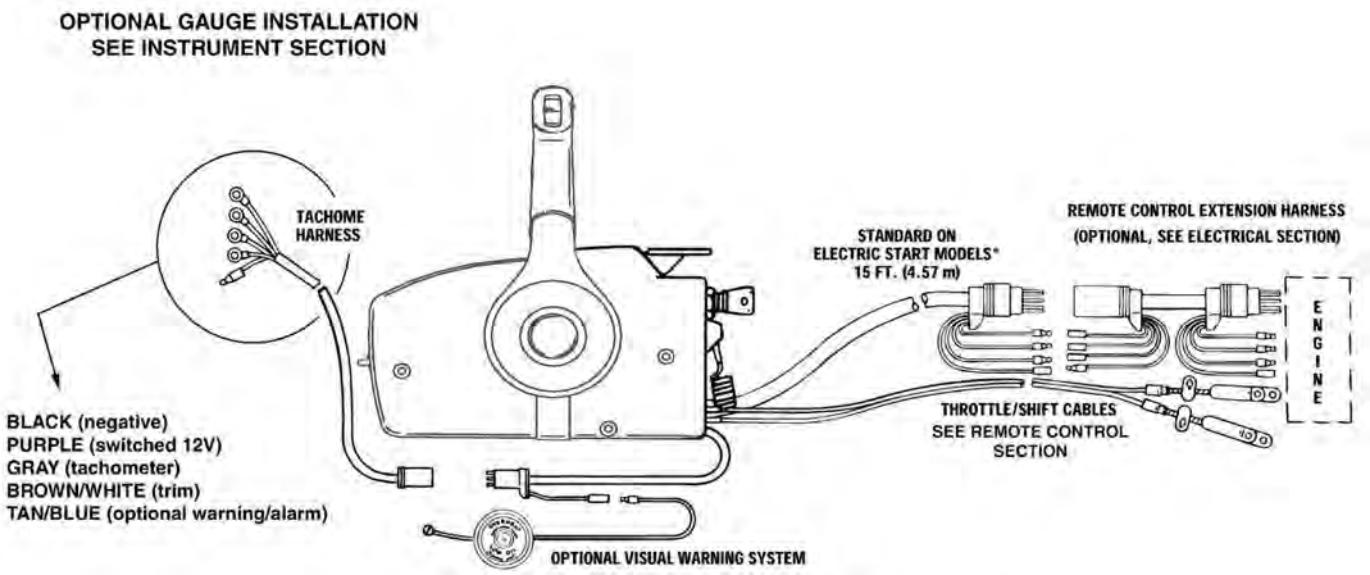

MSC 4500 SIDE MOUNT CONTROL SCHEMATIC

Required mounting clearances:
The remote control must be mounted on a hard, flat vertical surface no less than 6.3 mm (1/4 in.) thick.

a) 90 degree forward rotation from center of handle
b) 70 degree reverse rotation from center of handle
c) Hand clearance

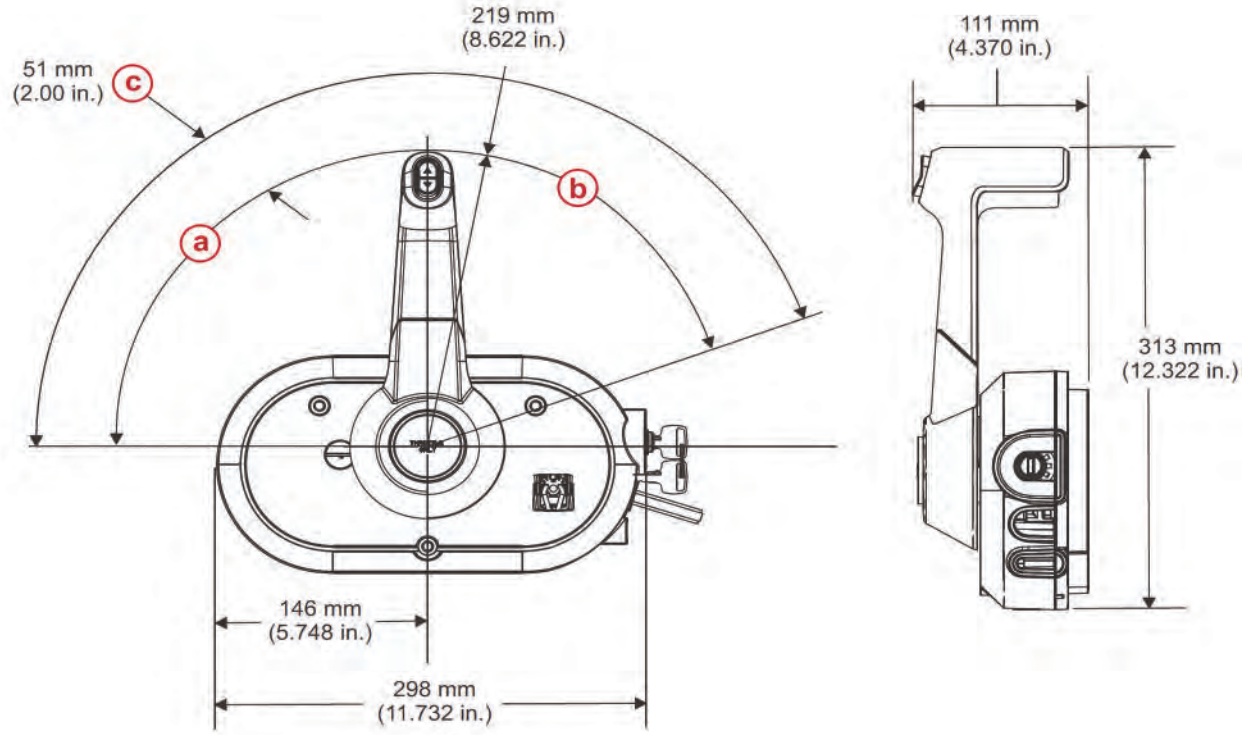

MY 2005 & UP F8/9.9 ELECTRIC SIDE MOUNT SCHEMATIC

Model Year 2005 and Newer 8/9.9 hp. FourStroke Outboard when using new side mount controls with Amp 10-pin connector.

Electric Start, with and without trim control

New MSC Side Mount Controls 881170A10, A11, A12 do not require any additional engine adapter harness.

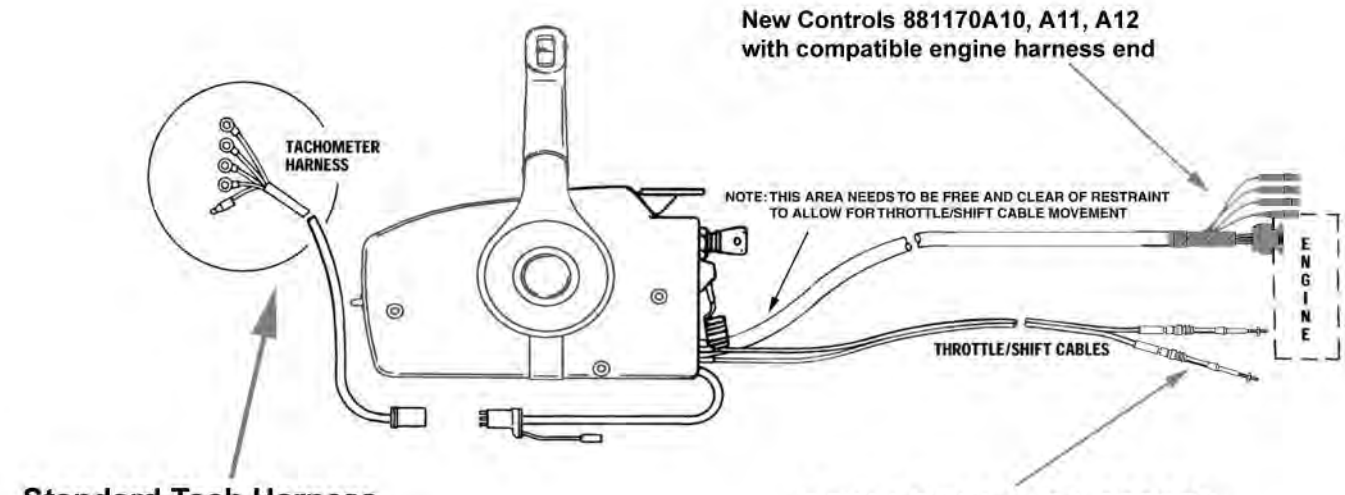

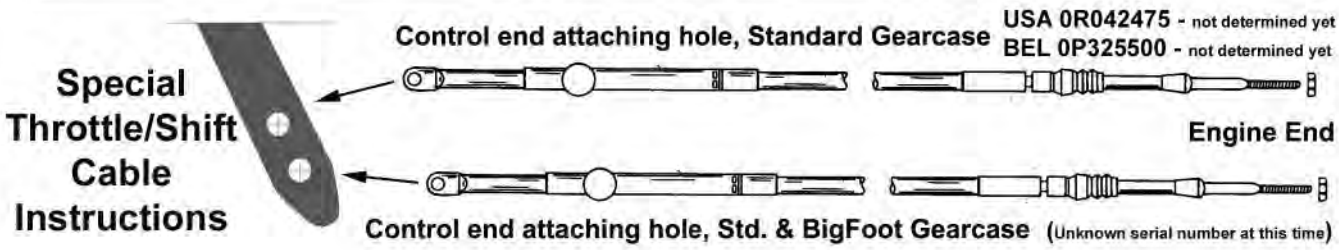

MY 2005 & UP F8/9.9 ELECTRIC W/MERC STYLE PLUG

Model Year 2005 and Newer 8/9.9 hp. FourStroke Outboards when using side mount controls with traditional Mercury style harness plug.

Electric Start, with and without trim control

MSC 4000 Side Mount Controls 881170A 3, A15, A20 require the engine end adapter harness indicated on this schematic.

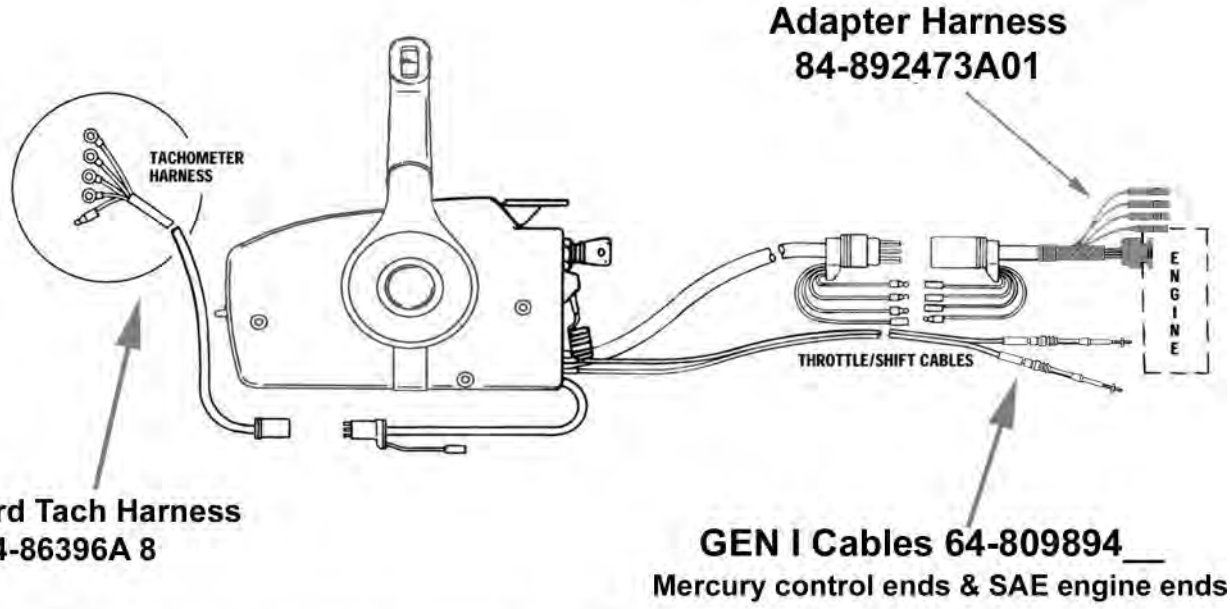

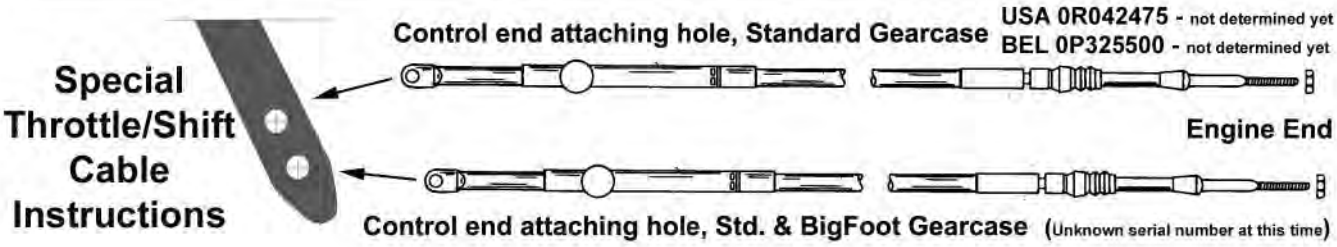

MERCRUISER TWO-STATION (ELECTRIC SHIFT) SCHEMATIC

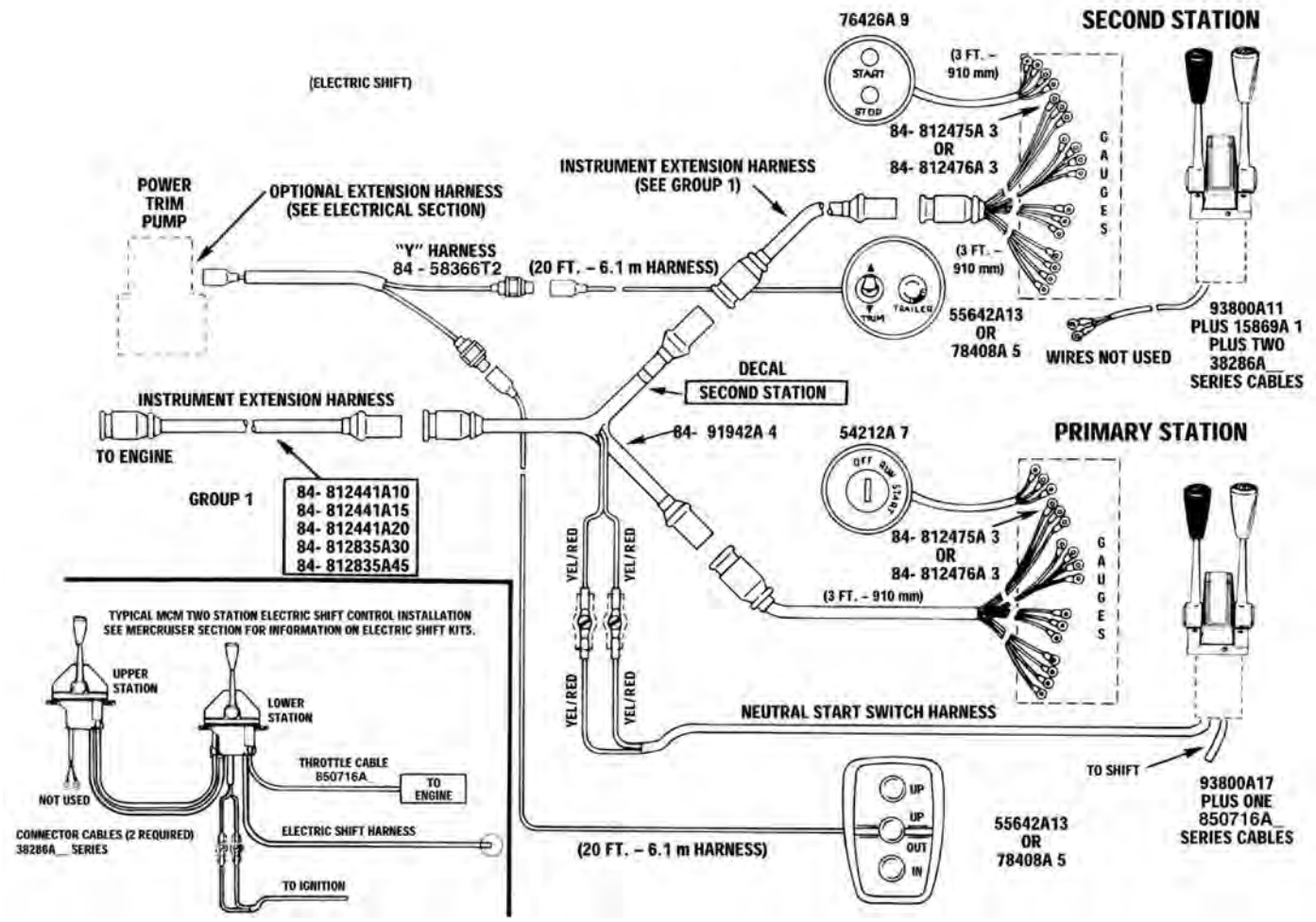

OUTBOARD DUAL STATION SCHEMATIC - SHEET ONE

75 thru 200 HP (excluding model year 2000 and the Digital Optimax) Two engines require two sets of controls, keyswitches, etc.. See sheet no. 2 for quantities.

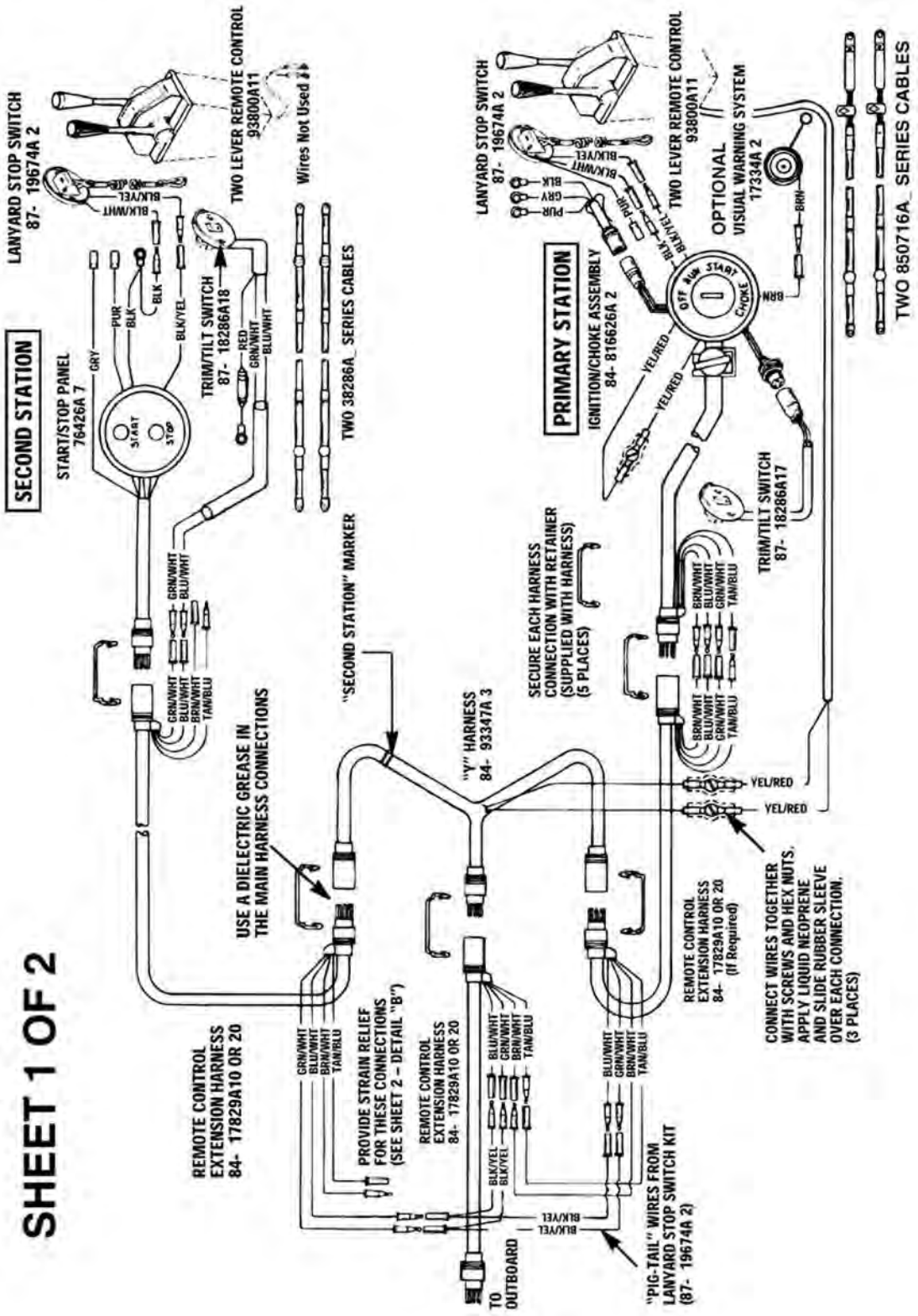

OUTBOARD DUAL STATION SCHEMATIC - SHEET TWO

75 thru 200 HP (excluding model year 2000 and the Digital Optimax)

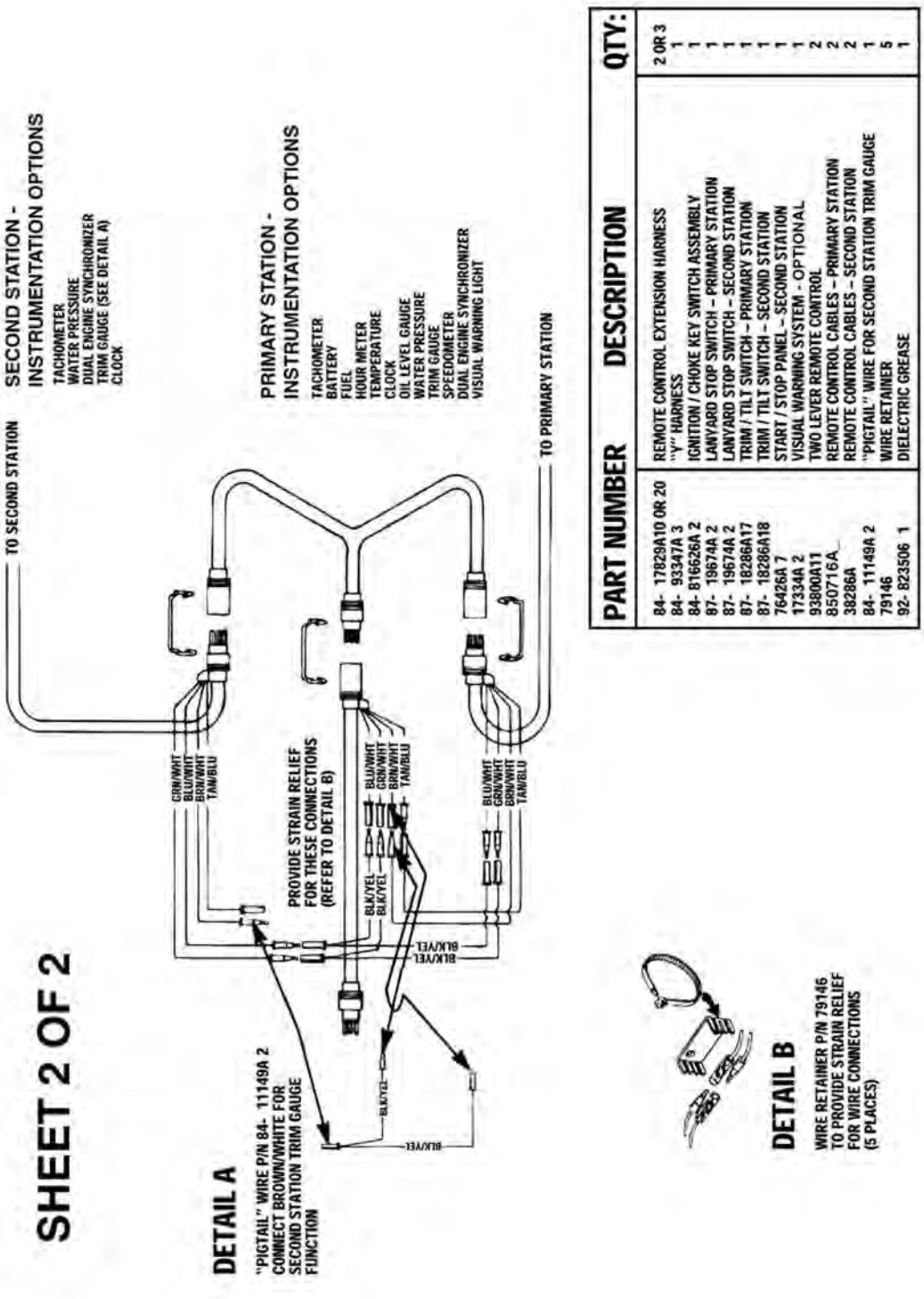

PART NUMBER	DESCRIPTION	QTY:
84- 17829A10 OR 20	REMOTE CONTROL EXTENSION HARNESS	2 OR 3
84- 93347A 3	"Y" HARNESS	1
84- 816626A 2	IGNITION / CHOKE KEY SWITCH ASSEMBLY	1
87- 19674A 2	LANYARD STOP SWITCH – PRIMARY STATION	1
87- 19674A 2	LANYARD STOP SWITCH – SECOND STATION	1
87- 18286A17	TRIM / TILT SWITCH – PRIMARY STATION	1
87- 18286A18	TRIM / TILT SWITCH – SECOND STATION	1
76426A 7	START / STOP PANEL – SECOND STATION	1
17334A 2	VISUAL WARNING SYSTEM - OPTIONAL	1
93800A11	TWO LEVER REMOTE CONTROL	2
8507716A	REMOTE CONTROL CABLES – PRIMARY STATION	2
38286A	REMOTE CONTROL CABLES – SECOND STATION	2
84- 11149A 2	"PIGTAIL" WIRE FOR SECOND STATION TRIM GAUGE	1
79146	WIRE RETAINER	5
92- 823506 1	DIELECTRIC GREASE	1

MPC 4000 PANEL MOUNT CONTROLS (TRIM/NON-TRIM)

Required mounting clearances for 858690A 1, 2, 3.

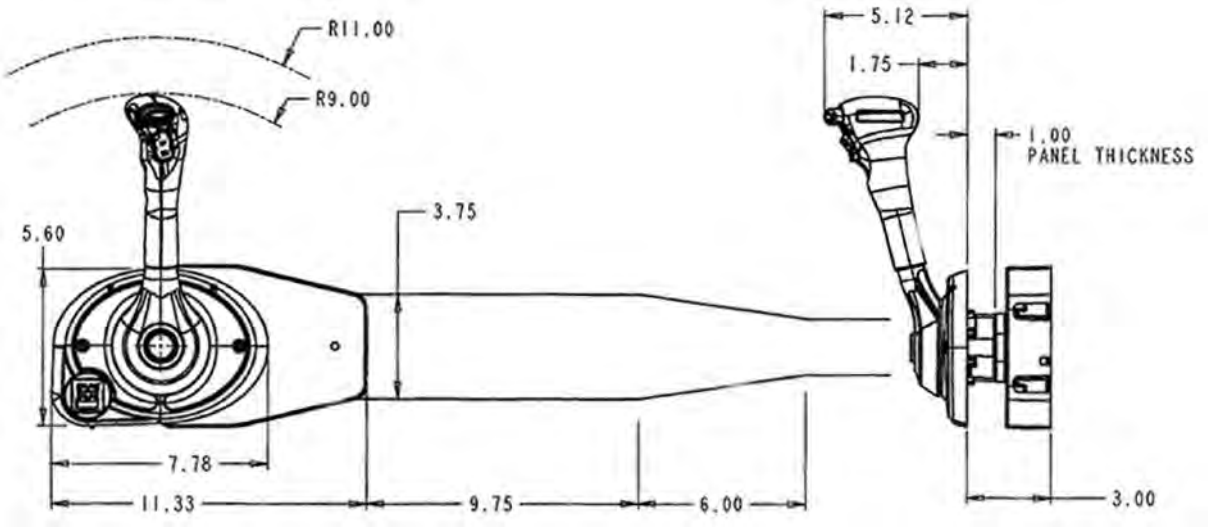

MPC 4000 GEN II PANEL MOUNT-LOCK BAR DESIGN

(Trim/Non-Trim)
_Required mounting clearances for 883710A__ series controls

Mechanical Panel Control (Trim/Non-Trim)

IMPORTANT: Ensure that the remote control has adequate clearance and does not contact other components. The cable path should be free of obstructions. See shaded area.

IMPORTANT: The minimum bend radius of the remote control cable is 305 mm (12 in.). For optimum performance, plan a cable route that does not require bends smaller than the minimum. A bend radius less than the minimum creates cable friction and may reduce cable life.

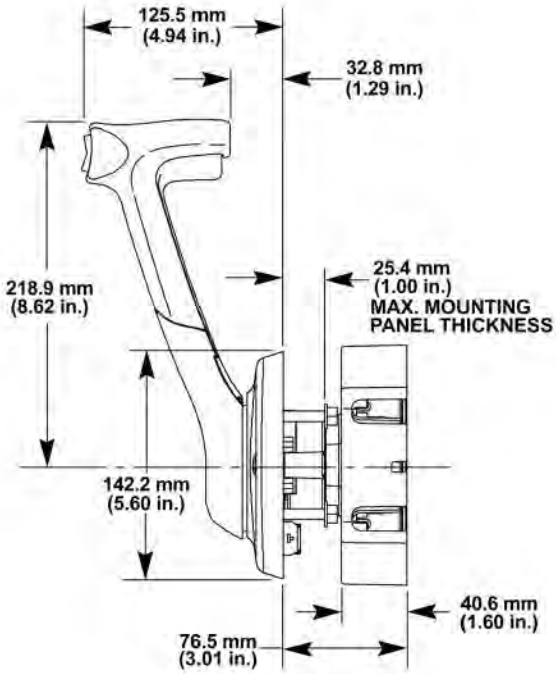

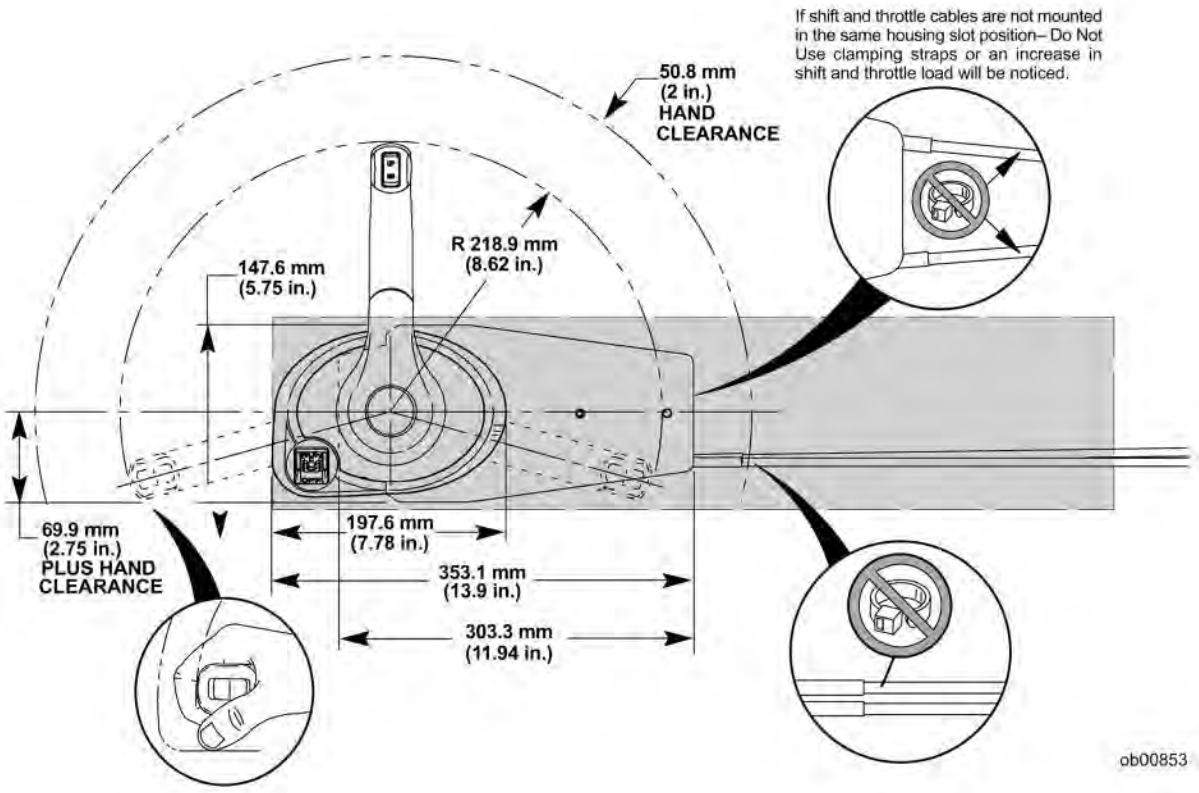

MPC 4000 GEN II PANEL MOUNT-LOCK BAR FINGER RELEASE DESIGN

(Trim/Non-Trim)
_Required mounting clearances for series controls - Common to 883710A__ series Lock Bar

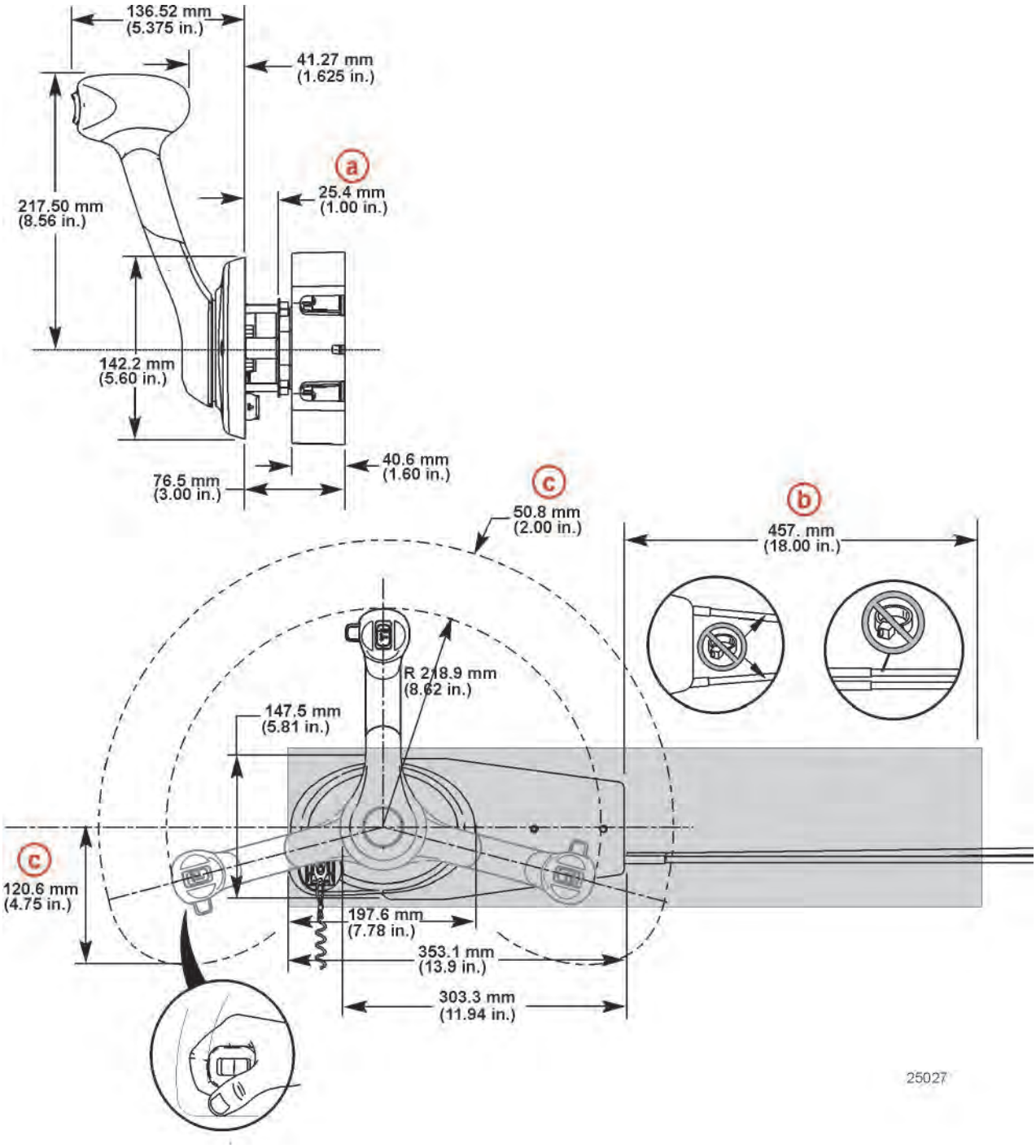

MPC 4000/4000 GEN II-PANEL MOUNT CUTOUT TEMPLATE

Template is combined 4000 control and 4000 Gen II control.

A = HOLES REQUIRED FOR MOUNTING 4000 SERIES MPC. MDL #'S: 858690–A01 THRU A11 & 883709–A01 THRU A03
B = HOLES REQUIRED FOR MOUNTING 4000 GEN II MPC. MDL #'S: 883710–A01 THRU A03
C = HOLE REQUIRED FOR THROTTLE FRICTION ACCESS, 4000 SERIES MPC. MDL #'S: 858690–A01 THRU A11

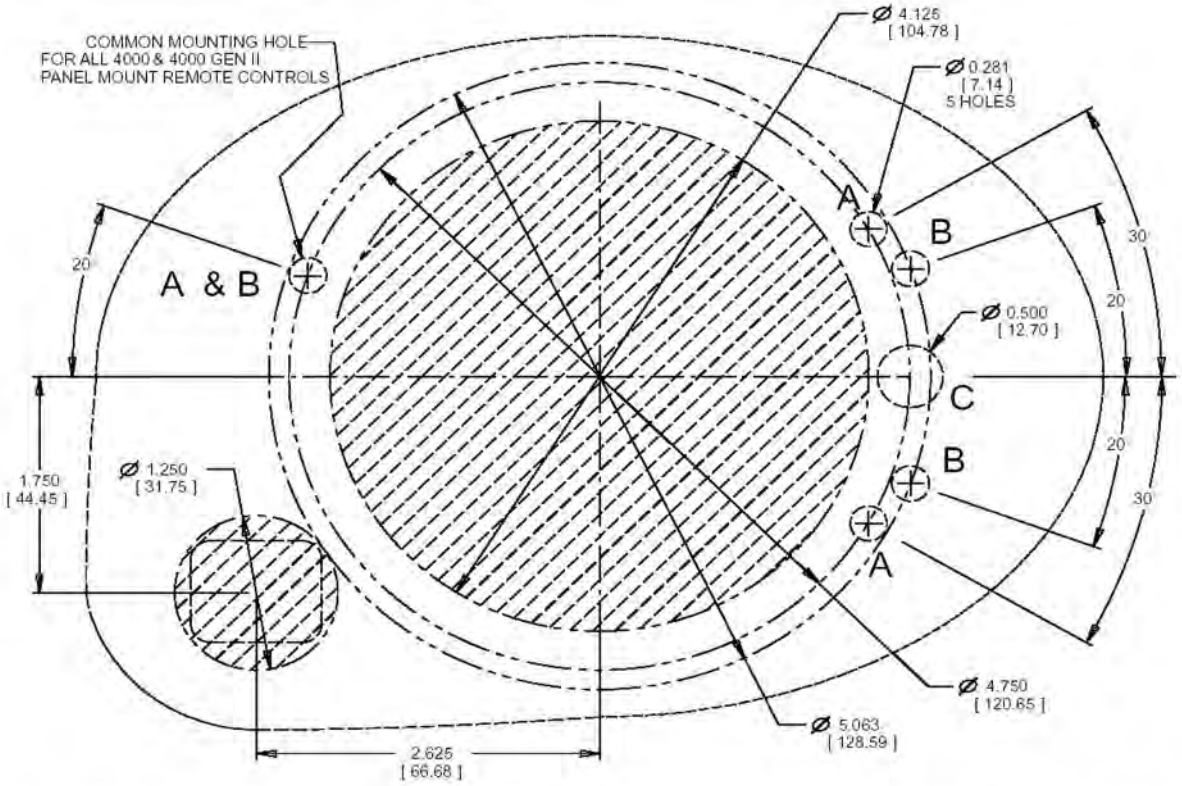

Size not to scale- refer instruction sheet included in control for correct template

MERCURY MercNET
Place Orders | Print Invoices | Register Product | Pay Online

MCC 4500 CONSOLE MOUNT CONTROLS - SINGLE ENGINE

Required mounting clearances for 877700A11, 12, 13. Both trim and non-trim applications.

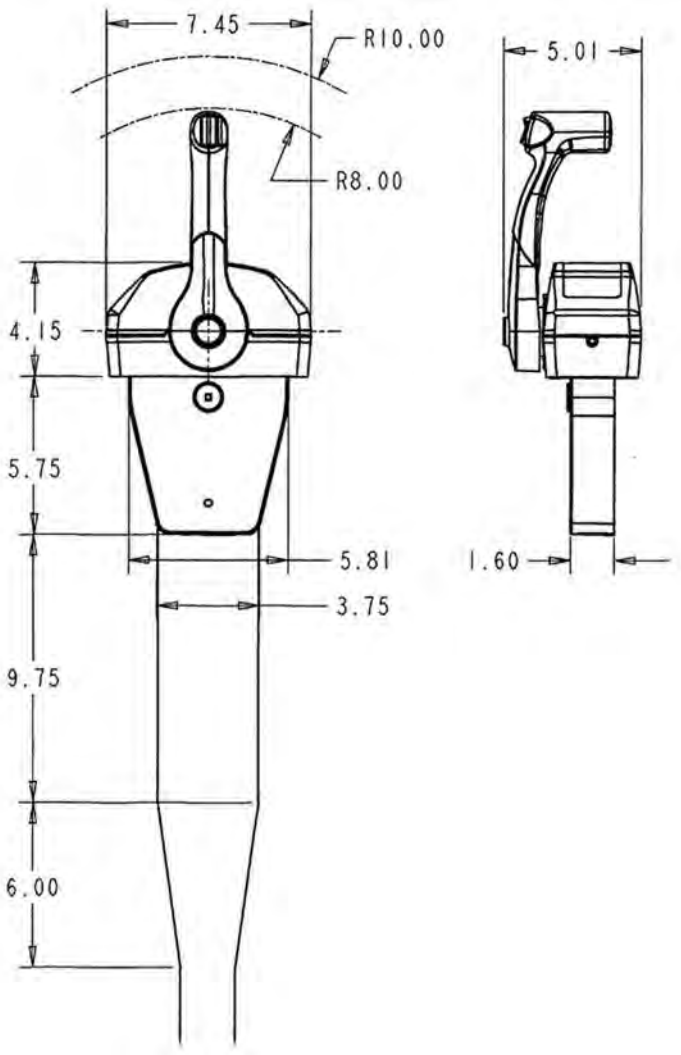

MCC 4500 GEN II CONSOLE MOUNT CONTROLS-SINGLE ENG.

(Trim/Non-Trim)
-Required mounting clearances for 883711A__ series controls

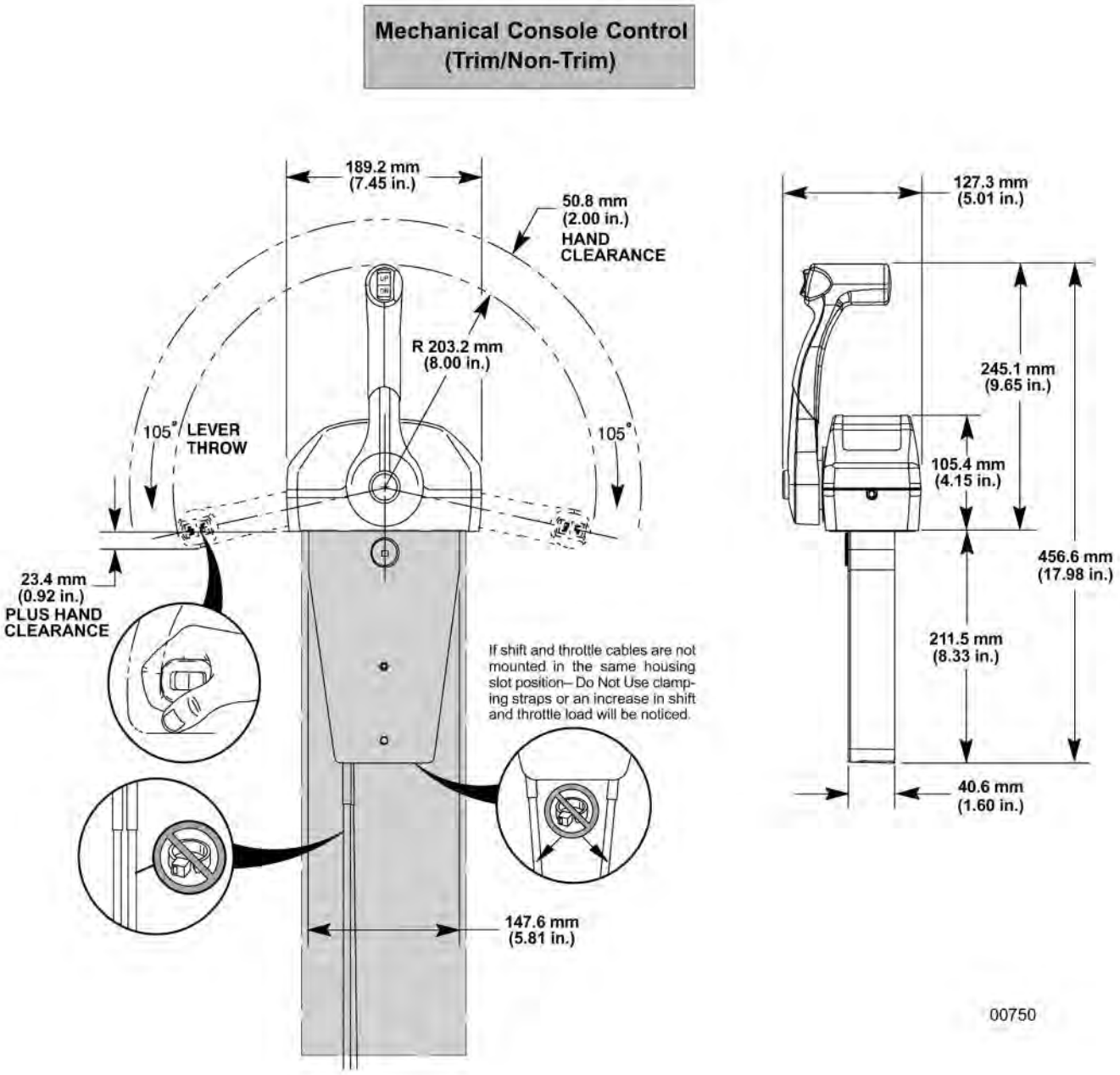

IMPORTANT: Ensure that the remote control has adequate clearance and does not contact other components. The cable path should be free of obstructions. See shaded area.

IMPORTANT: The minimum bend radius of the remote control cable is 305 mm (12 in.). For optimum performance, plan a cable route that does not require bends smaller than the minimum. A bend radius less than the minimum creates cable friction and may reduce cable life.

MCC 4500 CONSOLE MOUNT CONTROLS - DUAL ENGINE

Required mounting clearances for 877700A 1, 2, 3. Both trim and non-trim applications.

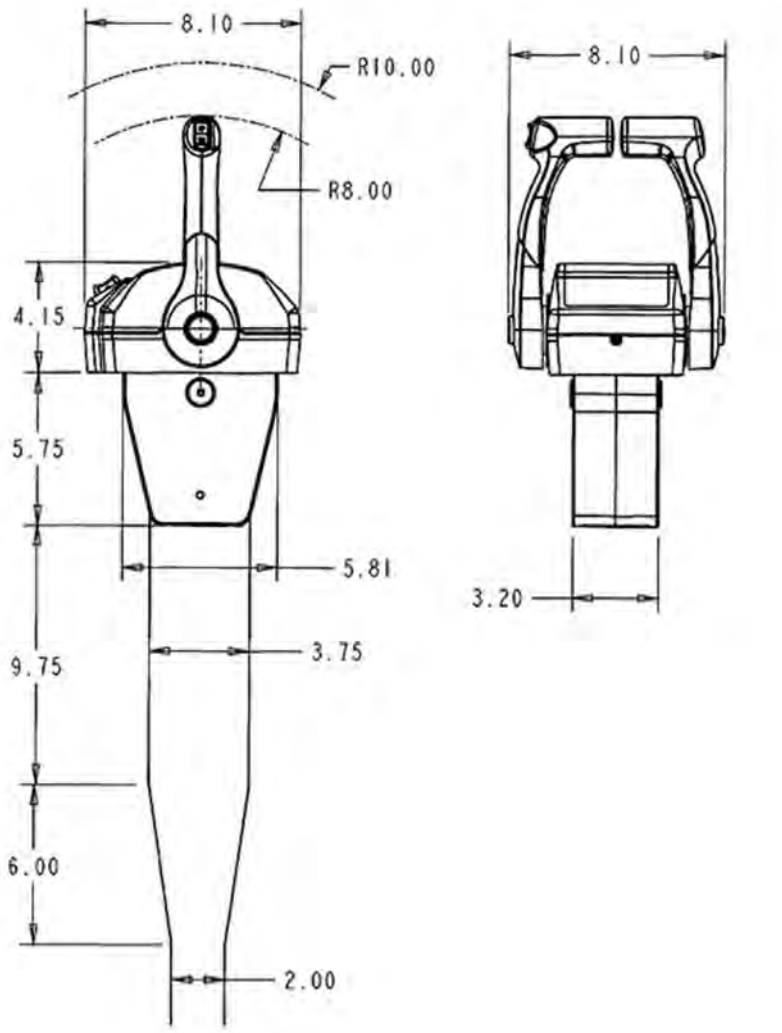

MCC 4500 GEN II CONSOLE MOUNT CONTROLS-DUAL ENGINE

(Trim/Non-Trim)
-Required mounting clearances for 881170A__ series controls

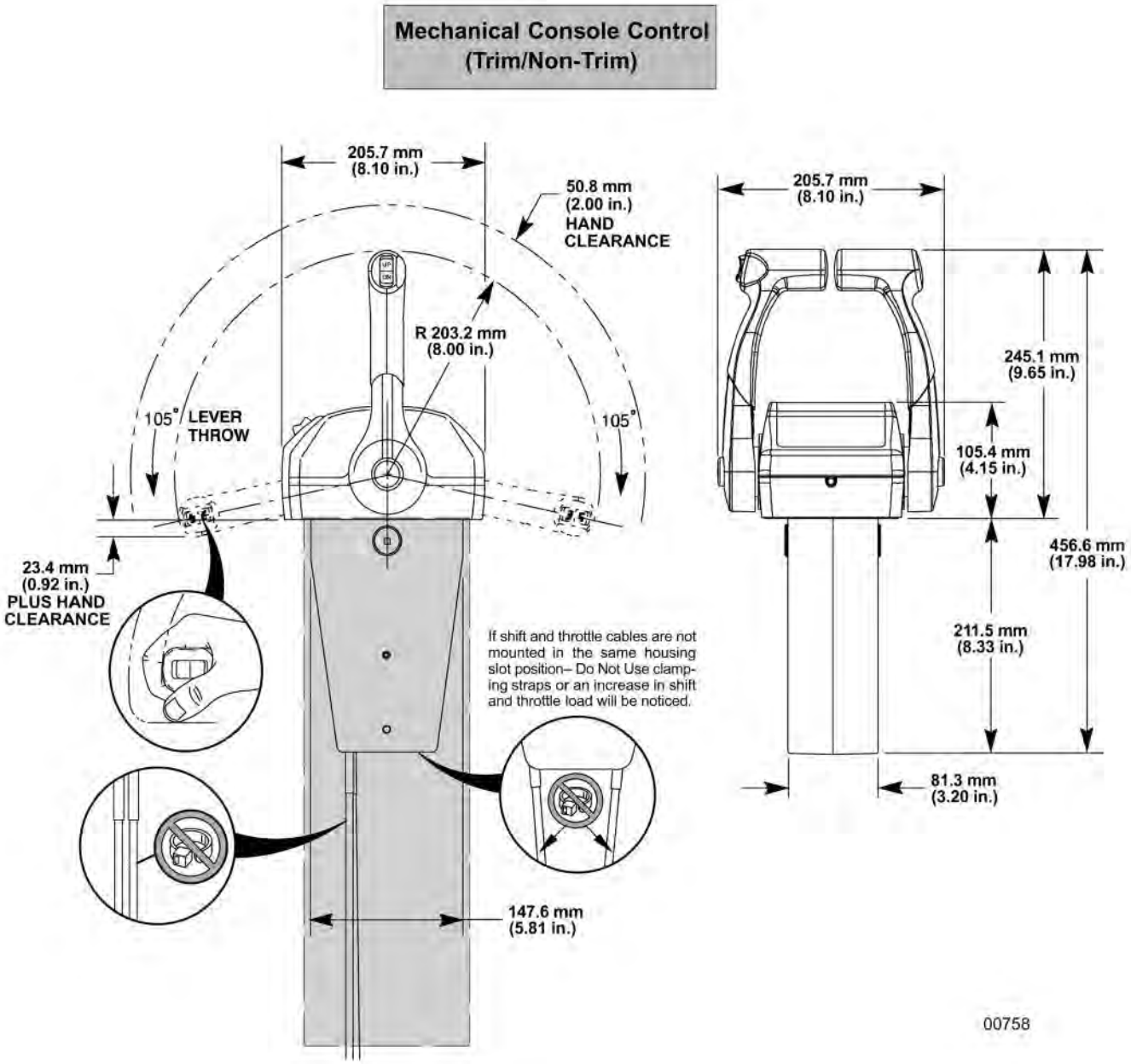

IMPORTANT: Ensure that the remote control has adequate clearance and does not contact other components. The cable path should be free of obstructions. See shaded area.

IMPORTANT: The minimum bend radius of the remote control cable is 305 mm (12 in.). For optimum performance, plan a cable route that does not require bends smaller than the minimum. A bend radius less than the minimum creates cable friction and may reduce cable life.

COMMANDER 3000 - PANEL MOUNT CONTROLS

Required mounting clearances for 827270A21, 22, 23. Both trim and non-trim applications.

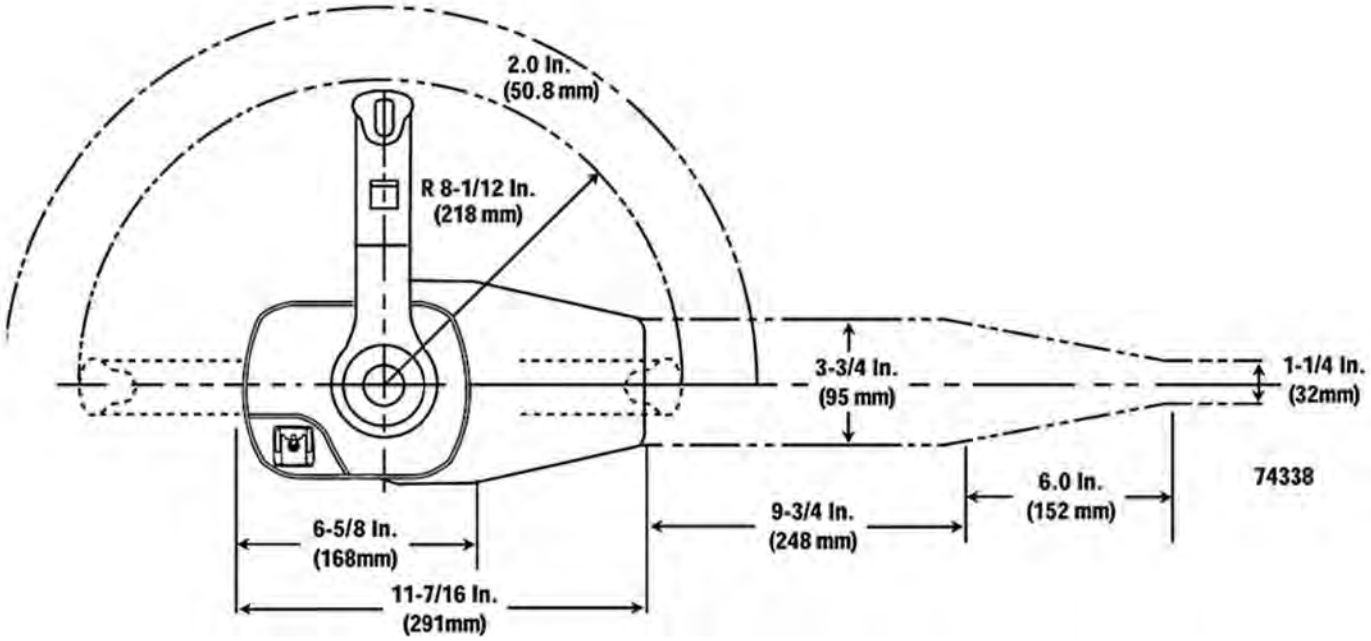

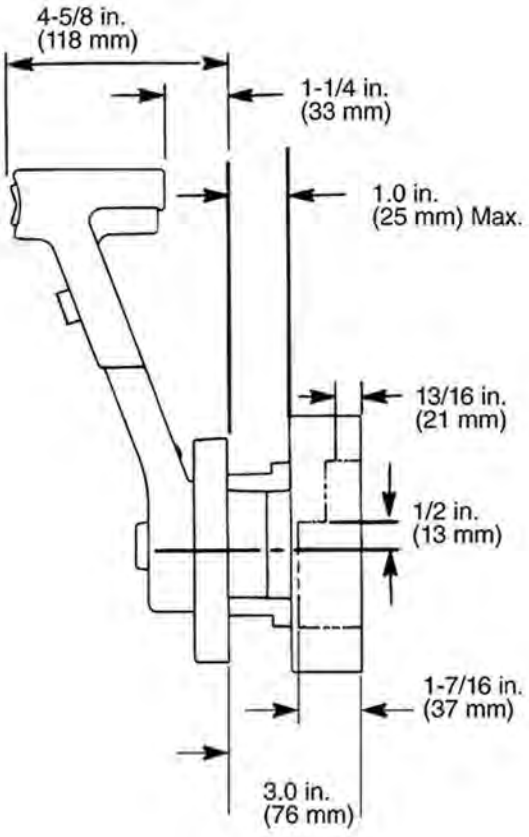

COMMANDER 3000-CONSOLE MOUNT CONTROL-SINGLE ENGINE

Required mounting clearances for 88688A60, 62, 64. Both trim and non-trim applications.

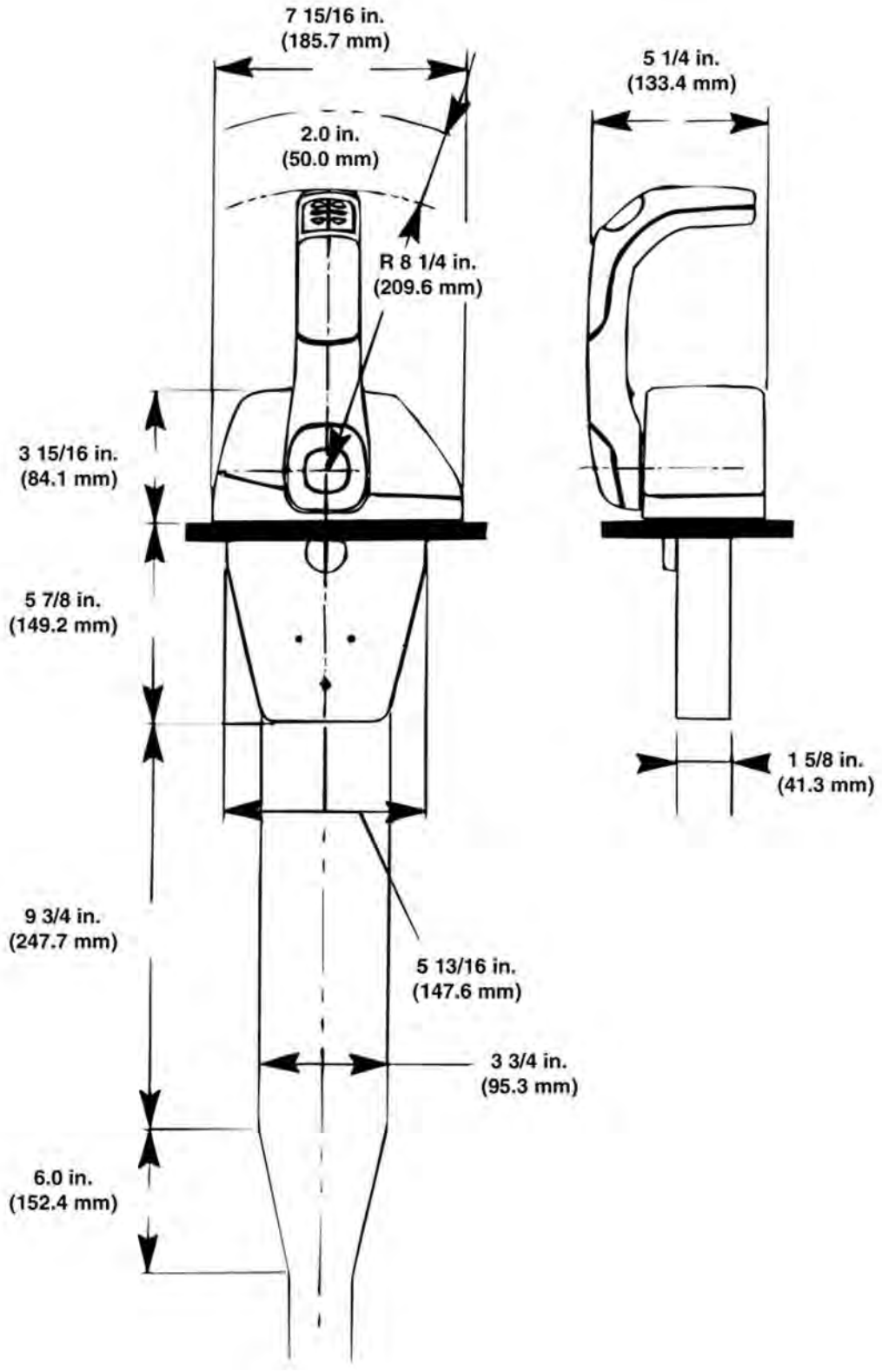

COMMANDER 3000-CONSOLE MOUNT CONTROL-DUAL ENGINE

Required mounting clearances for 88688A66, 68, 70. Both trim and non-trim applications.

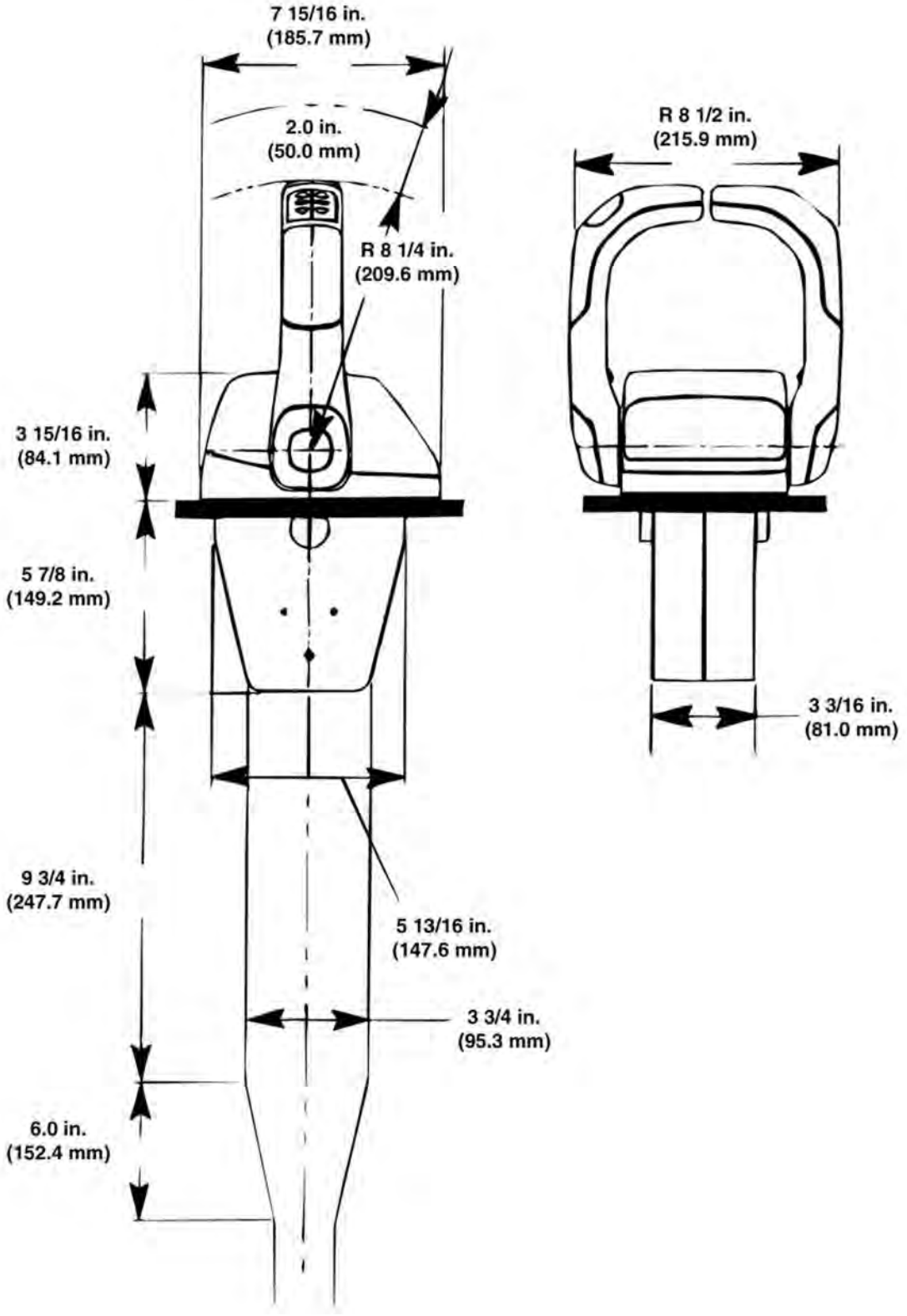

COMMANDER CONSOLE MOUNT - SINGLE ENGINE

Required clearances for 88688A25, 26, 27.

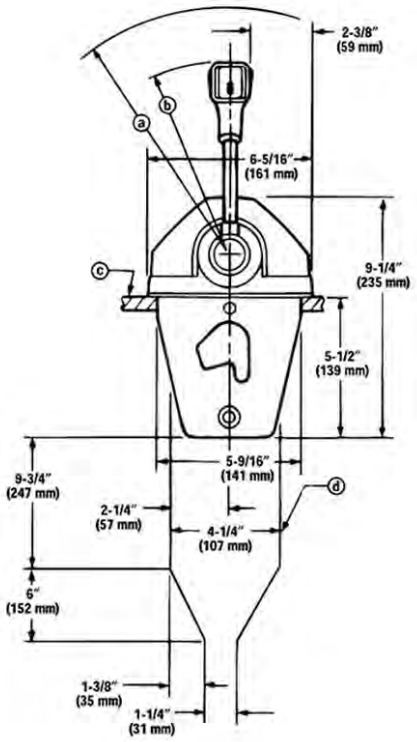

a - 9 5/8 IN. (245 mm) RADIUS PROVIDES 2 IN. (51 MM) HAND CLEARANCE
b - 7 5/8 IN. (197 mm) RADIUS MAXIMUM TRAVEL AVAILABLE
c - MOUNTING SURFACE
d - CONTROL CABLE ENVELOPE. DO NOT RETAIN OR BIND CABLES IN THIS AREA.

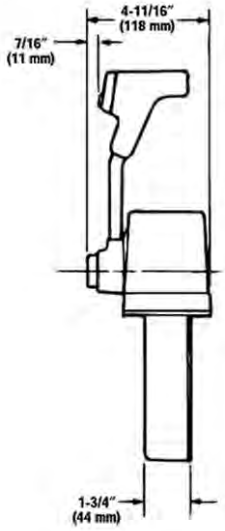

COMMANDER CONSOLE MOUNT - DUAL ENGINES

Required clearances for 88688A22, 23, 24.

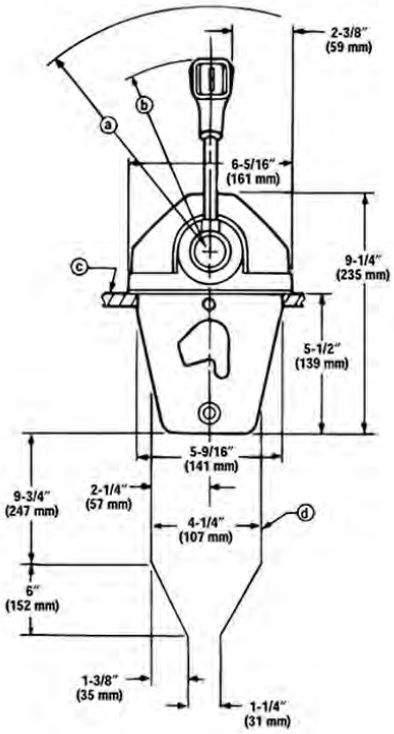

a - 9 5/8 IN. (245 mm) RADIUS PROVIDES 2 IN. (51 MM) HAND CLEARANCE
b - 7 5/8 IN. (197 mm) RADIUS MAXIMUM TRAVEL AVAILABLE
c - MOUNTING SURFACE
d - CONTROL CABLE ENVELOPE. DO NOT RETAIN OR BIND CABLES IN THIS AREA.

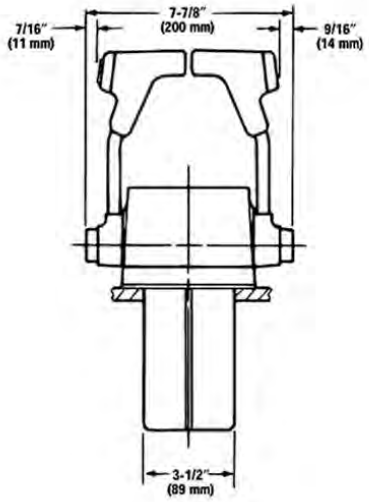

COMMANDER CONSOLE MOUNT - TWO LEVER

Required clearances for 93800A 5, 11, 13.

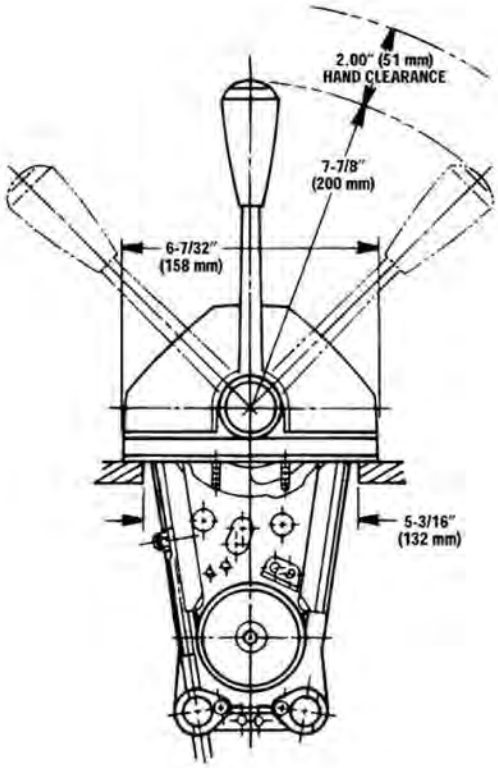

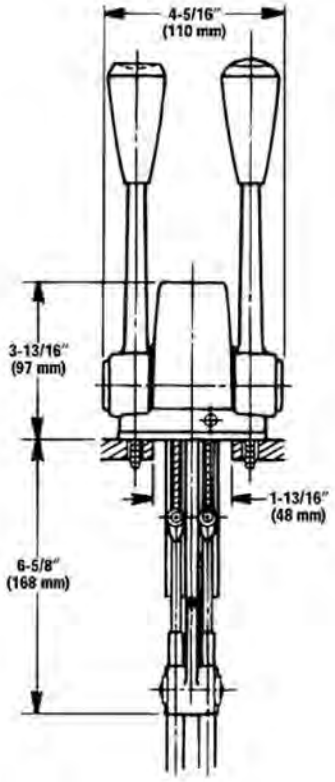

COMMANDER 2000 SIDE MOUNT CONTROLS

Required clearances for 1690_A_ series controls. Both trim and non-trim applications.

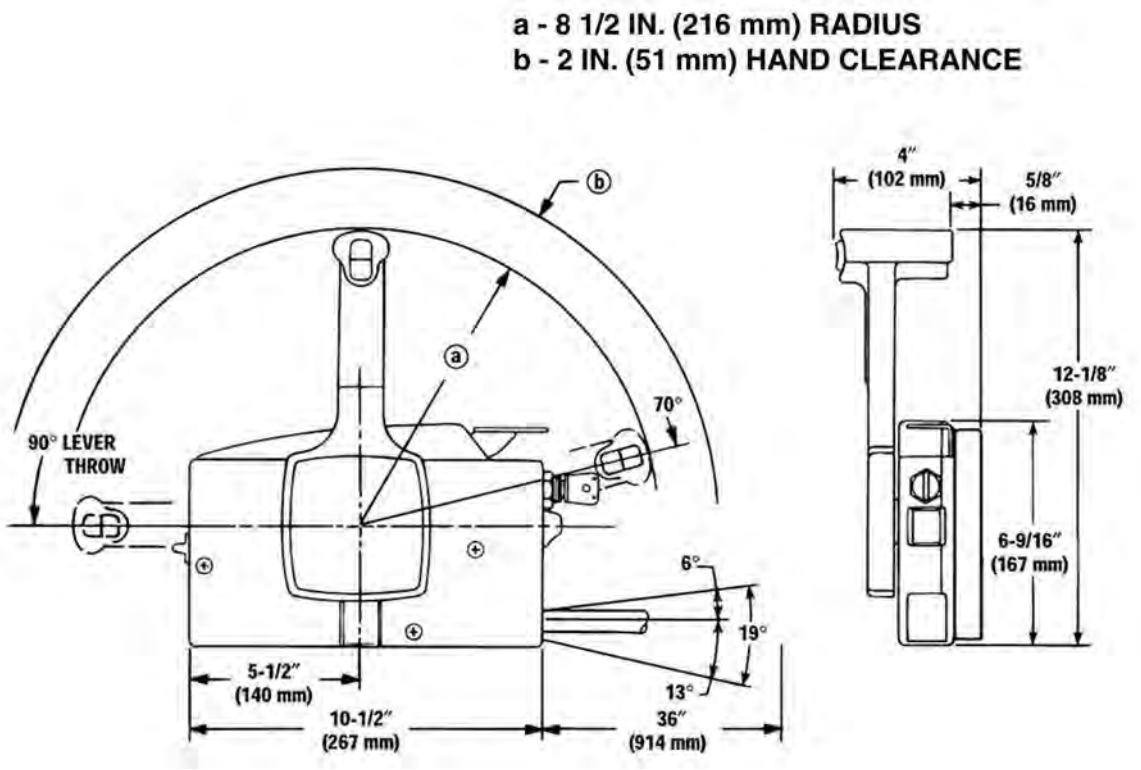

MSC 4000 SIDE MOUNT CONTROLS

Required mounting clearances for 881170a__ series. (Trim and Non-Trim)

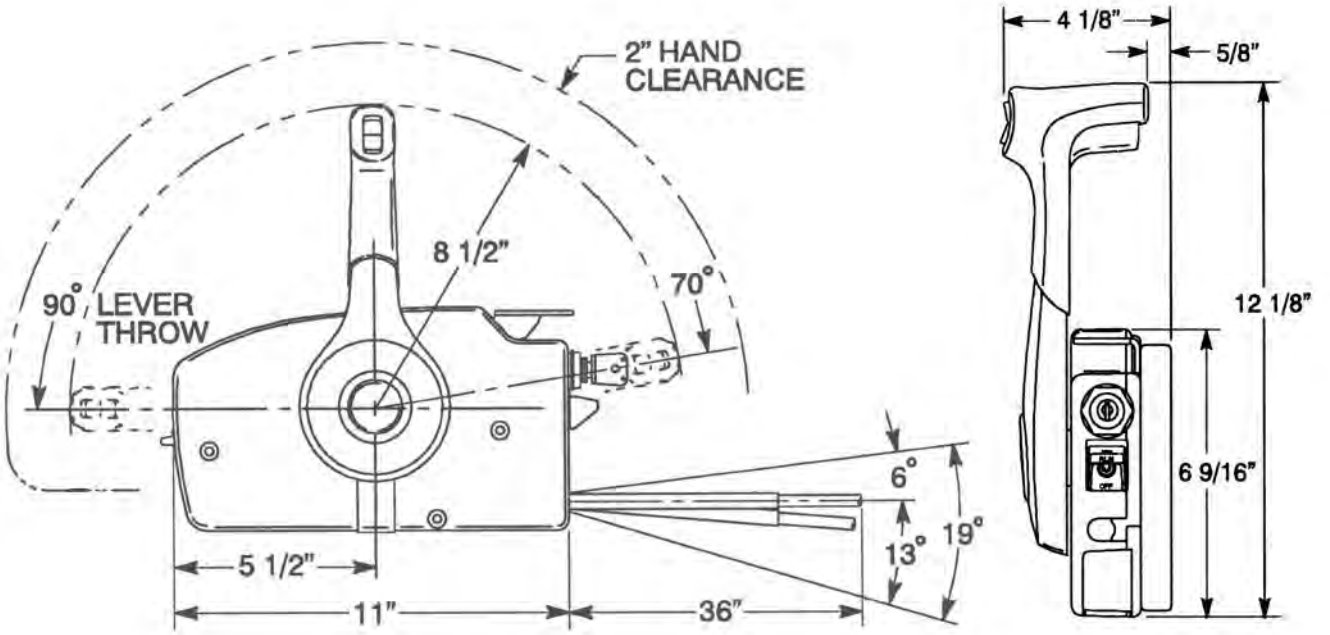

DTS - ERC PANEL MOUNT CUTOUT TEMPLATE

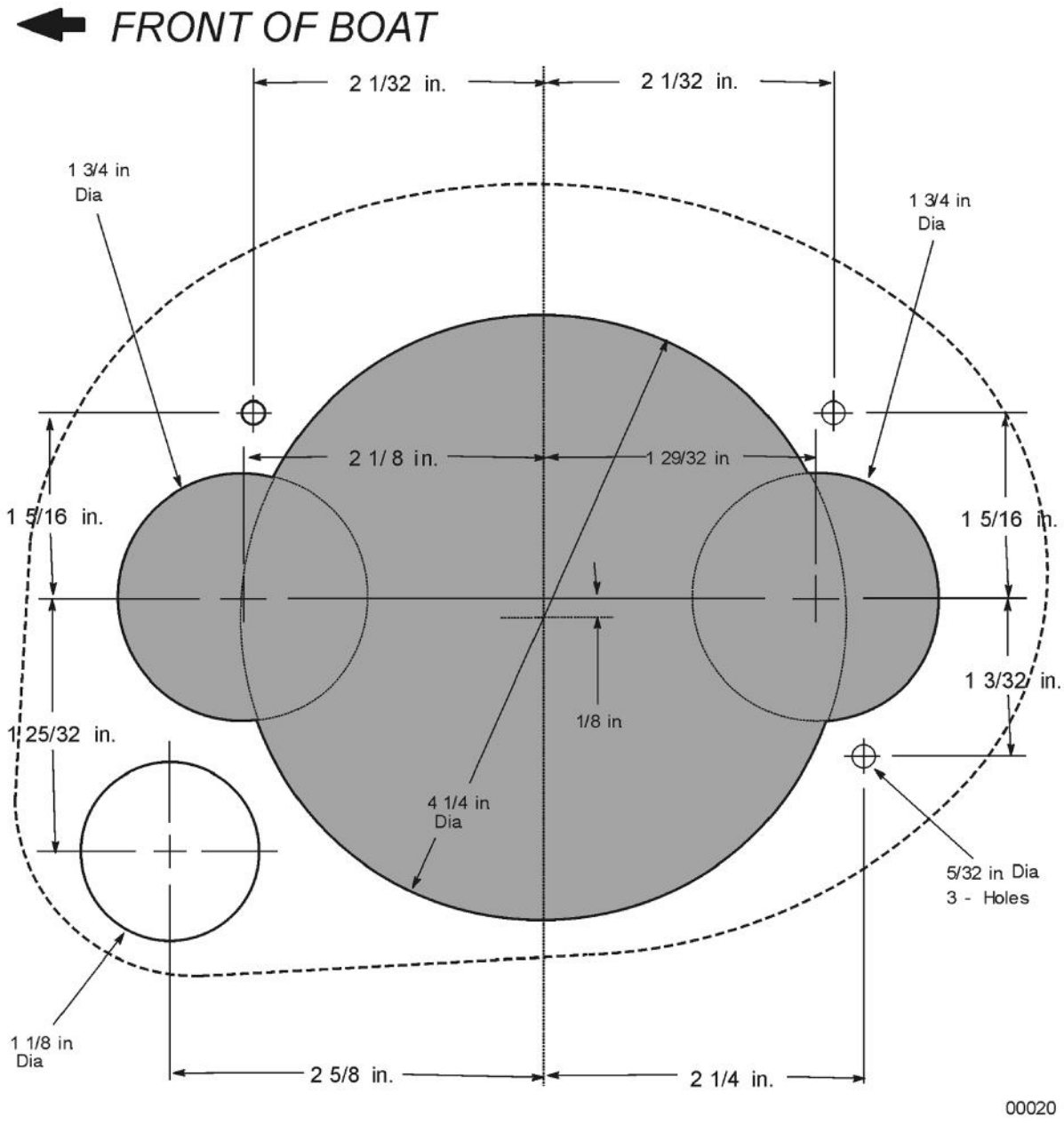

Size not to scale- refer instruction sheet included in control for correct template

DTS - ERC PANEL MOUNT CONTROLS

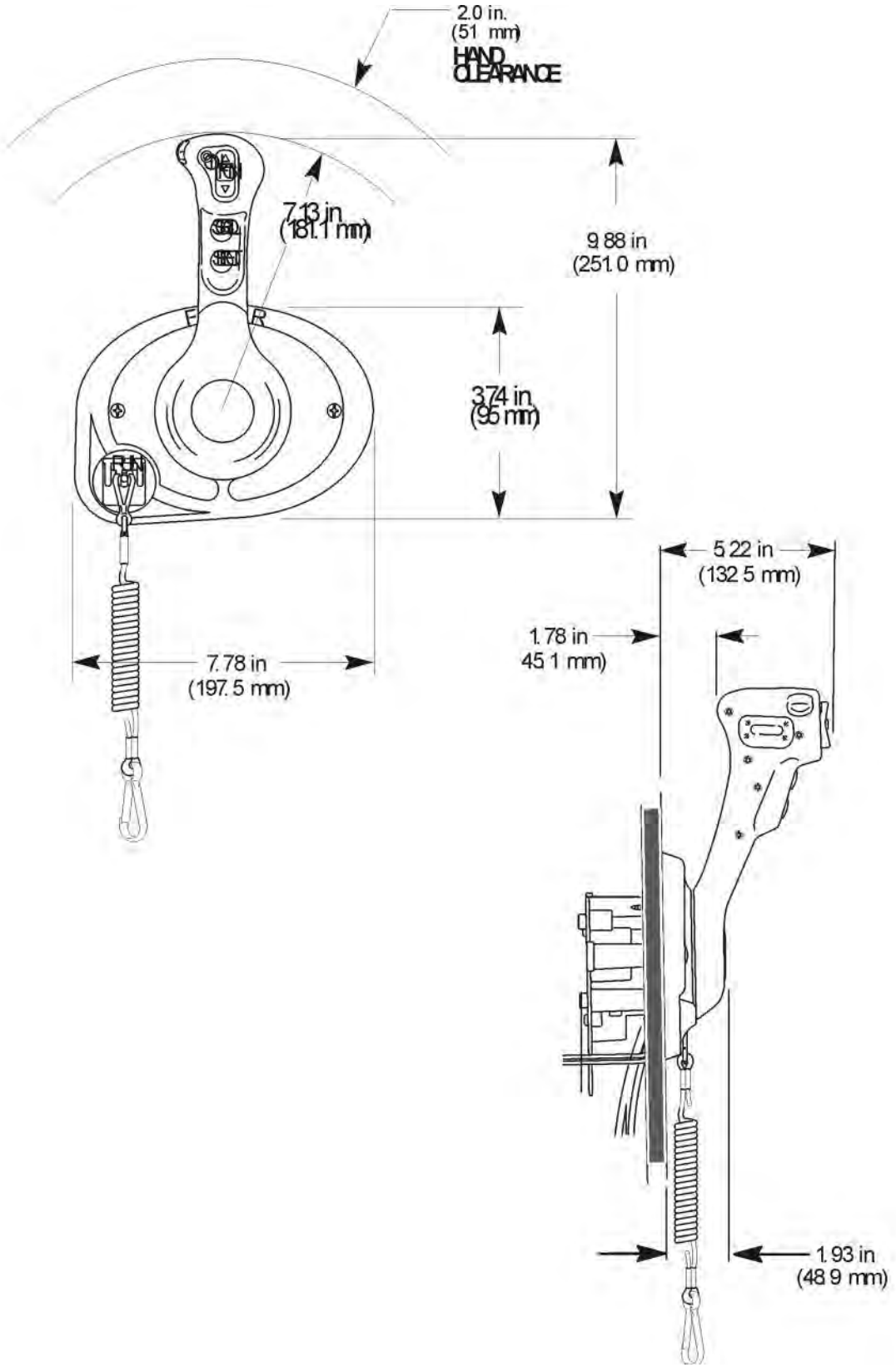

DTS - ERC DUAL CONSOLE MOUNT CUTOUT TEMPLATE

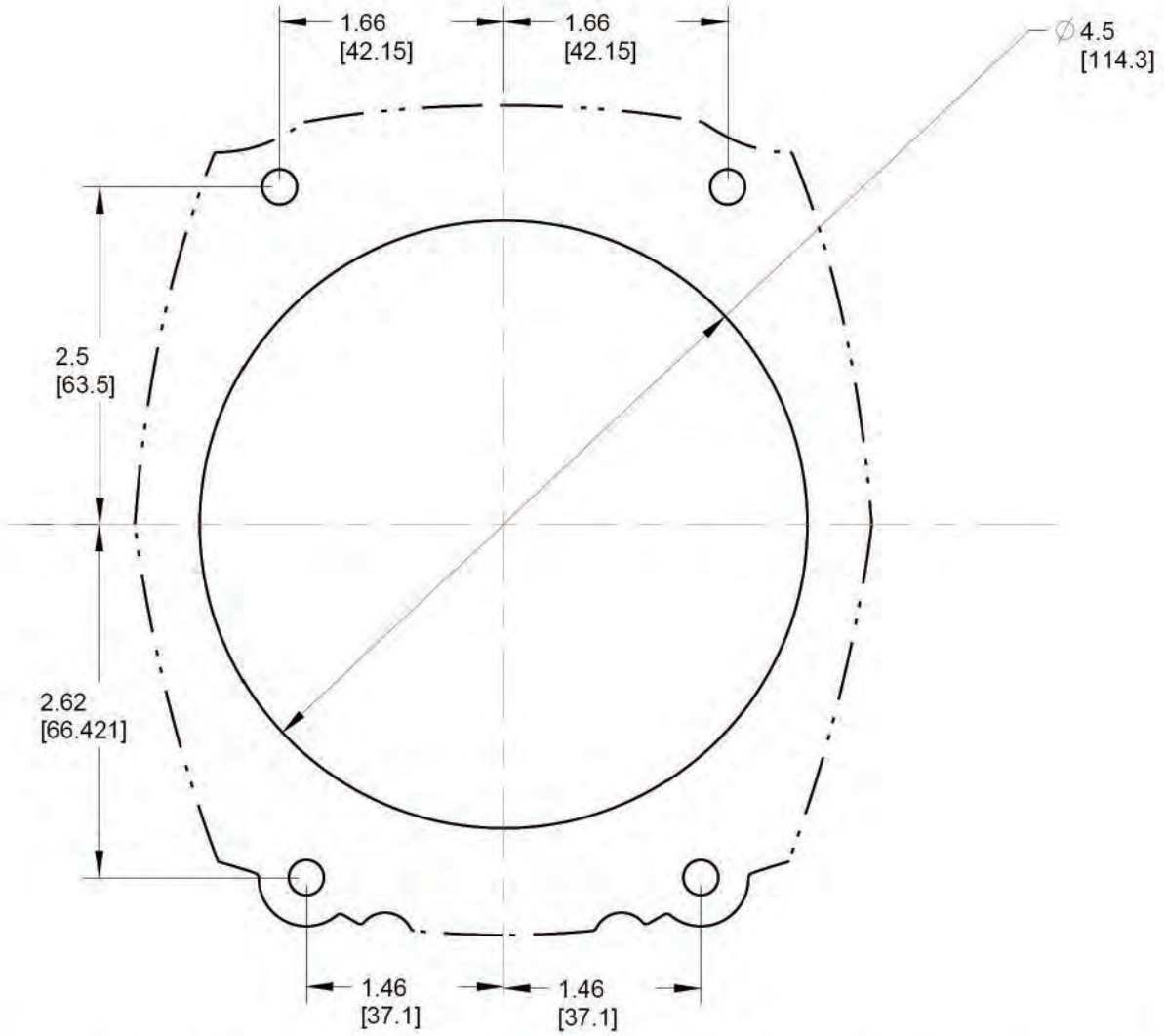

Size not to scale- refer instruction sheet included in control for correct template

DTS - ERC CONSOLE MOUNT CONTROLS - SINGLE ENGINE

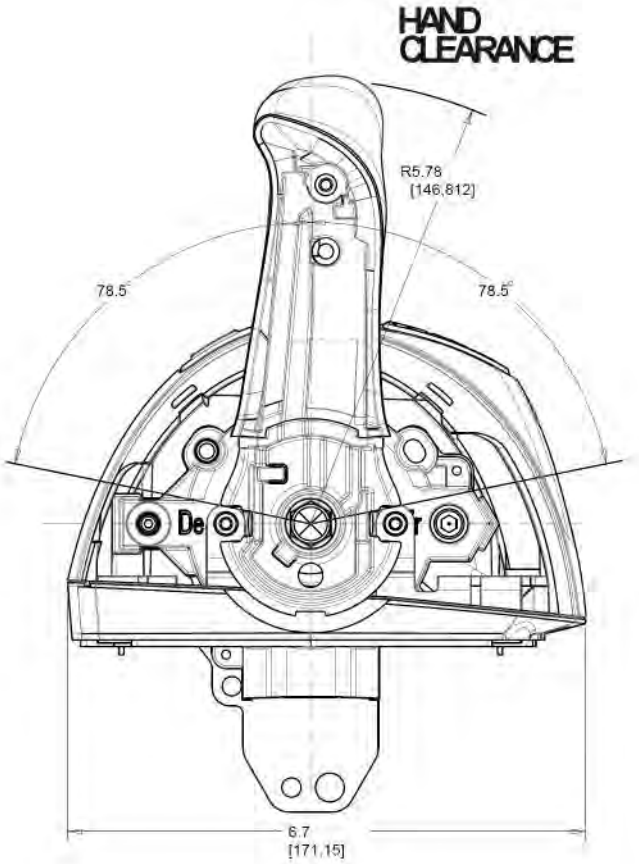

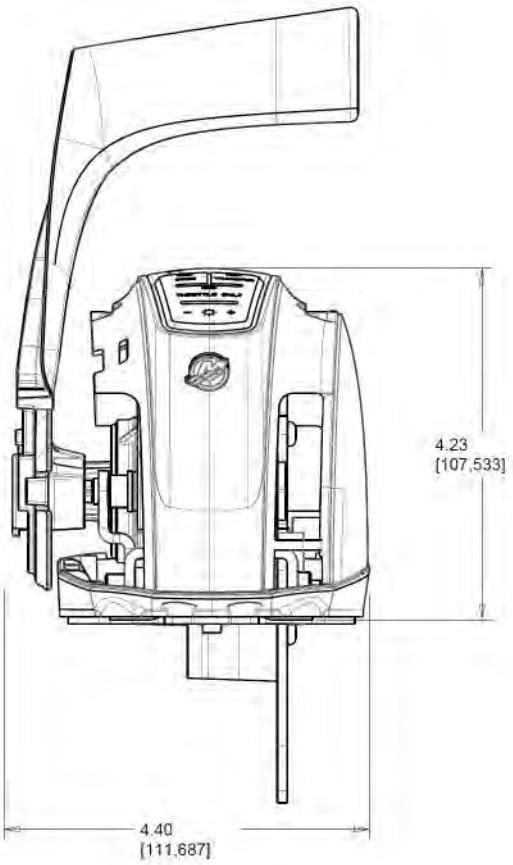

DTS - ERC SLIM BINNACLE - SINGLE ENGINE

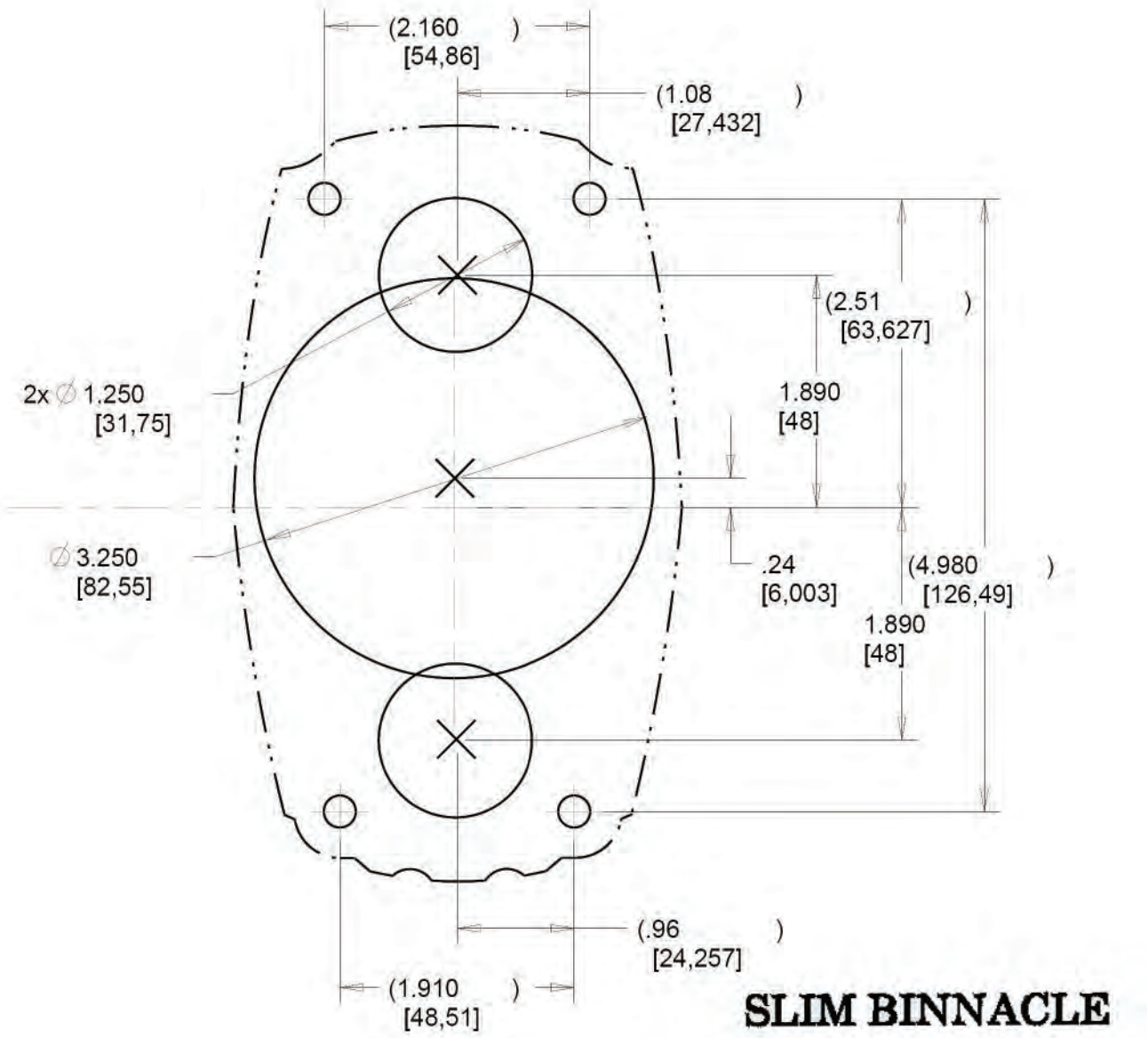

DTS - ERC CONSOLE MOUNT CONTROLS - DUAL ENGINE

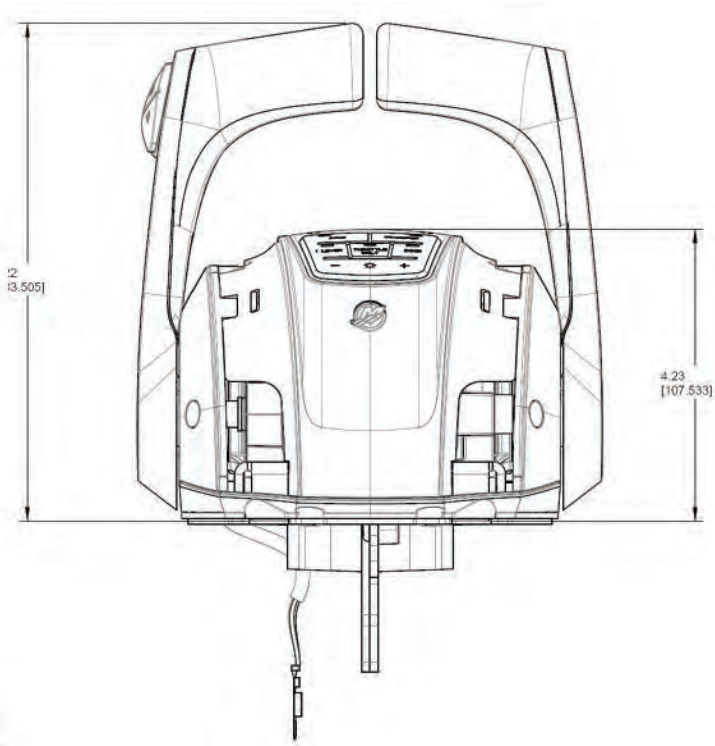

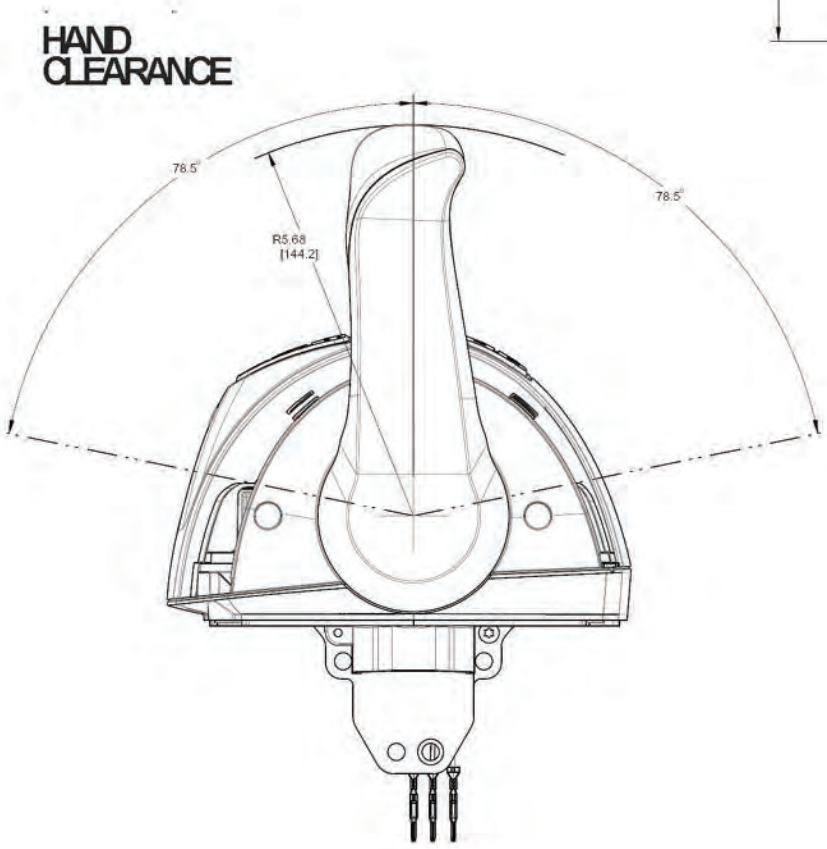

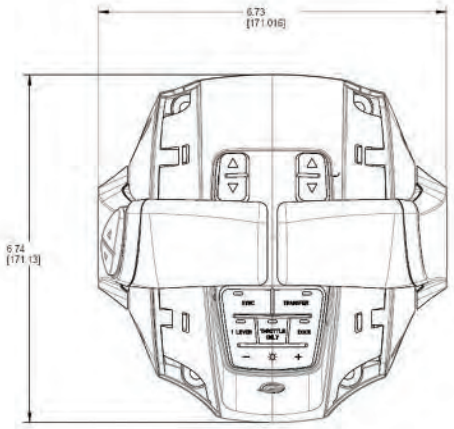

POWER STEERING-SINGLE STATION

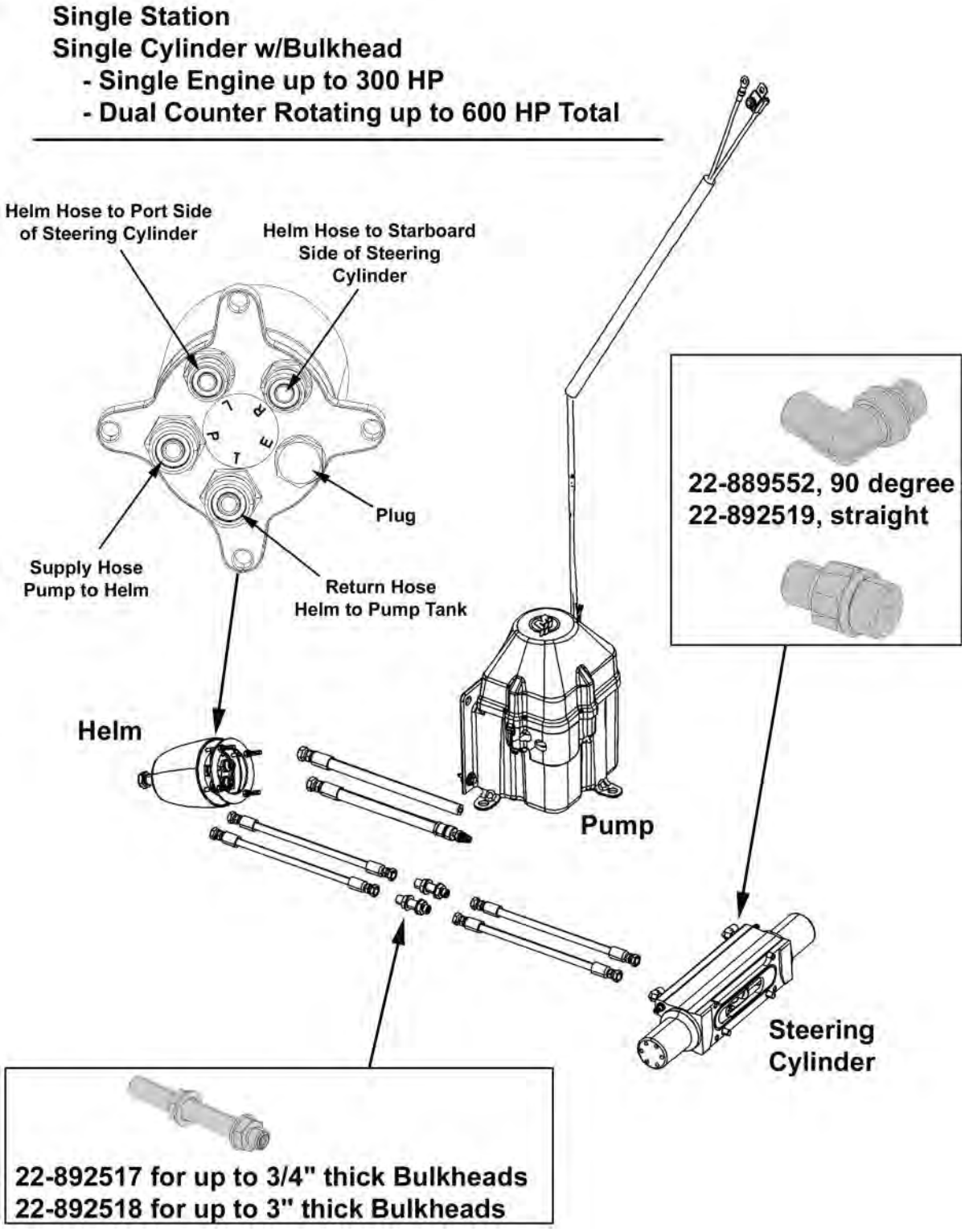

POWER STEERING-SINGLE STATION

Single Cylinder

Single Engine up to 300 Hp
Dual Counter Rotating Up to 600 Up Total

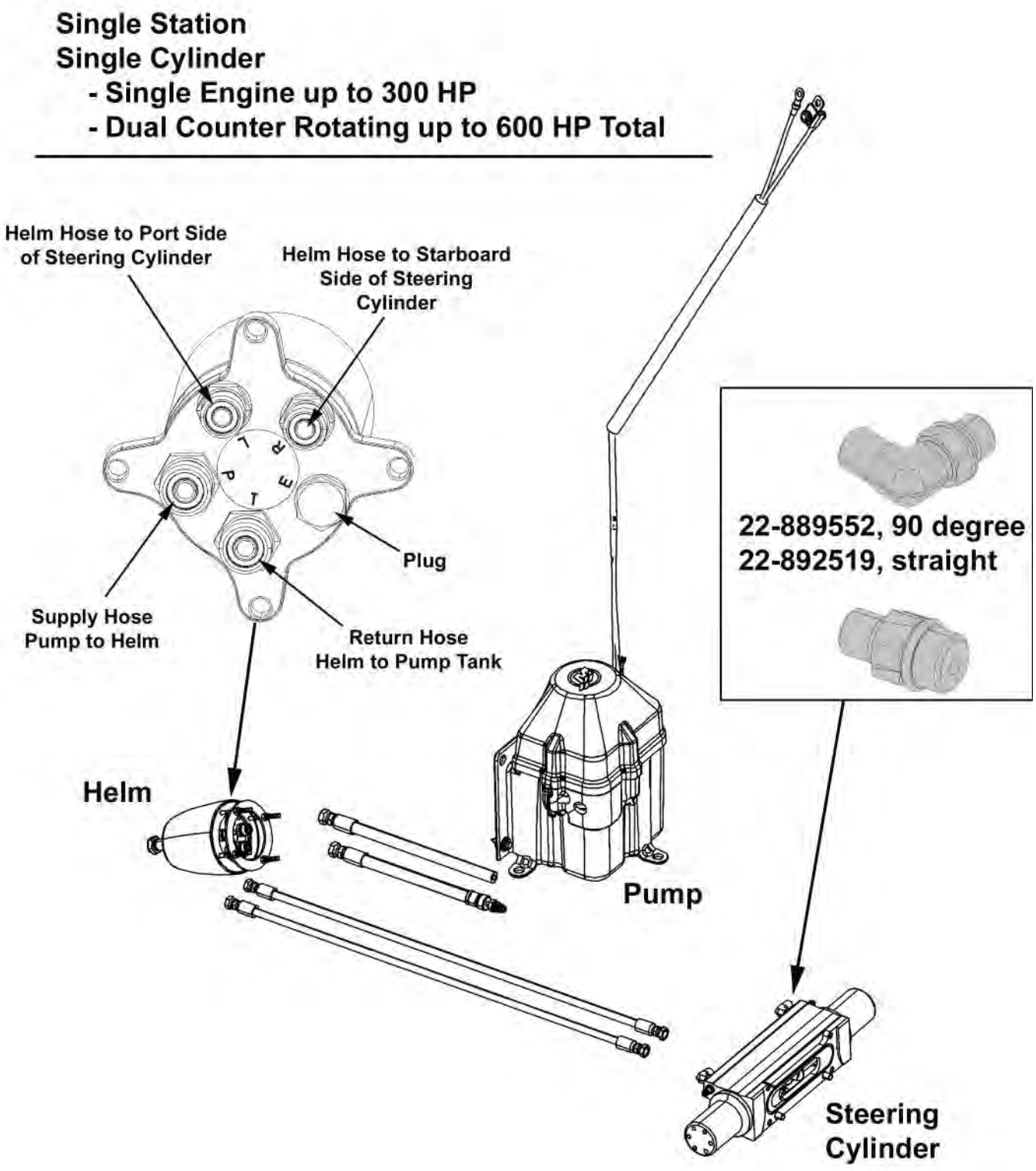

POWER STEERING DUAL STATION

Single Cylinder W/Bulkhead

Single Engine up to 300 Hp
Dual Counter Rotating Up to 600 Up Total

Dual Station
Single Engine w/Bulkhead
- **Single Engine up to 300 HP**
- **Dual Counter Rotating up to 600 HP Total**

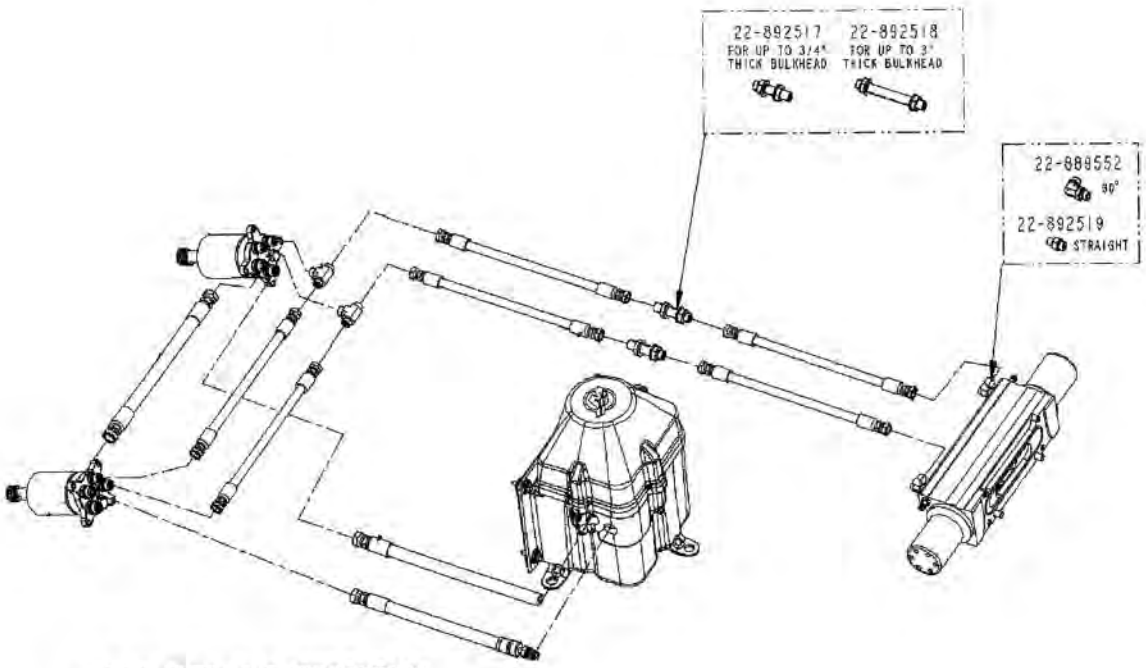

HELM HYDRAULIC CONNECTIONS

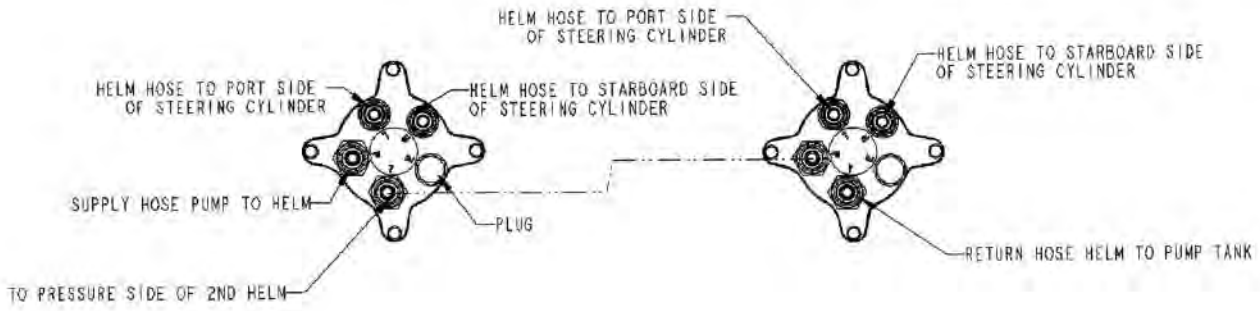

POWER STEERING SINGLE STATION

Dual Cylinder W/Bulkhead

Dual Engine Like-Rotation
Triple & Quad

Single Station
Dual Cylinder w/Bulkhead
- **Dual Engine Like-Rotation**
- **Triple & Quad**

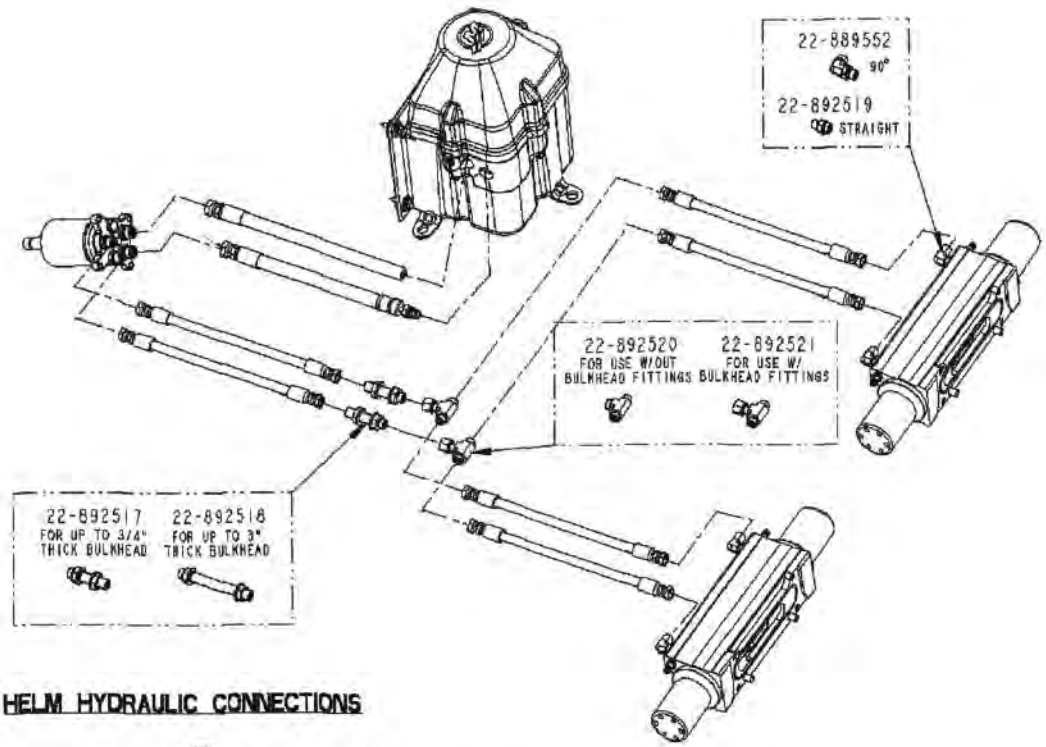

HELM HYDRAULIC CONNECTIONS

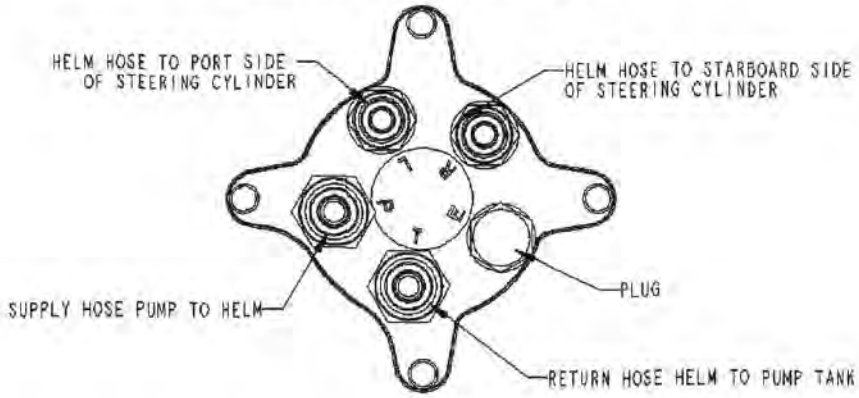

POWER STEERING DUAL STATION

Dual Cylinder W or W/Out/Bulkhead

Dual Engine Like-Rotation
Triple & Quad

Dual Station
Dual Cylinder w/ or wo/ Bulkhead
- **Dual Like-Rotation**
- **Triple & Quad**

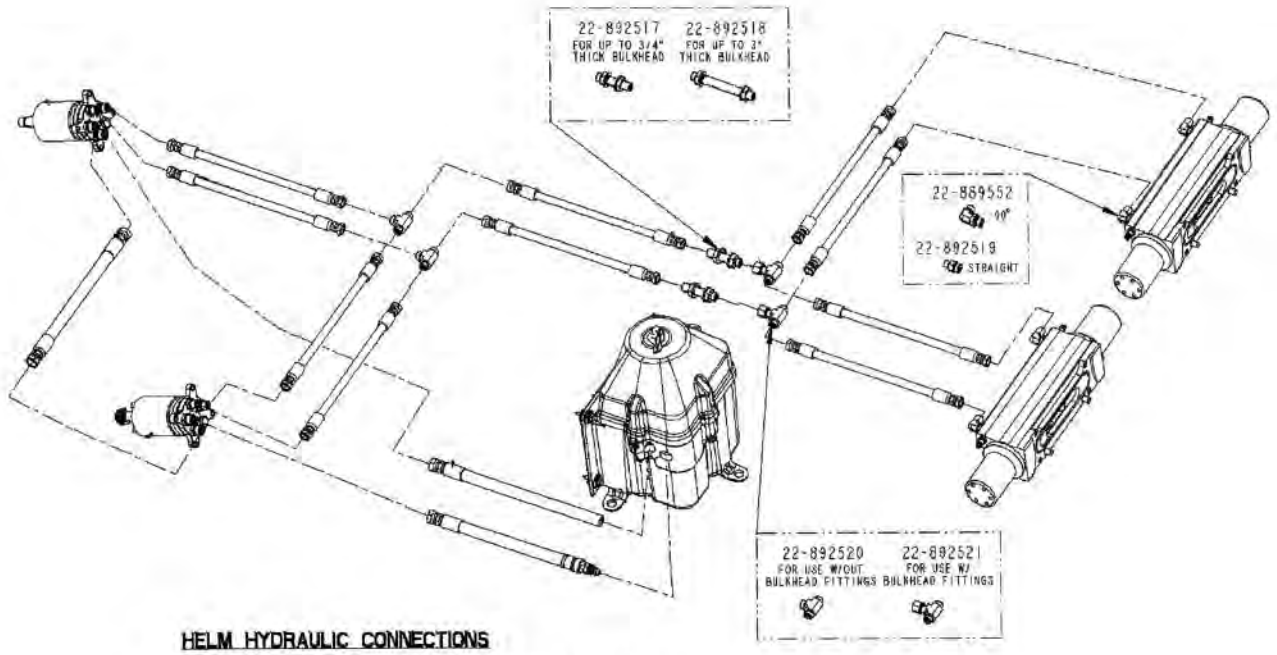

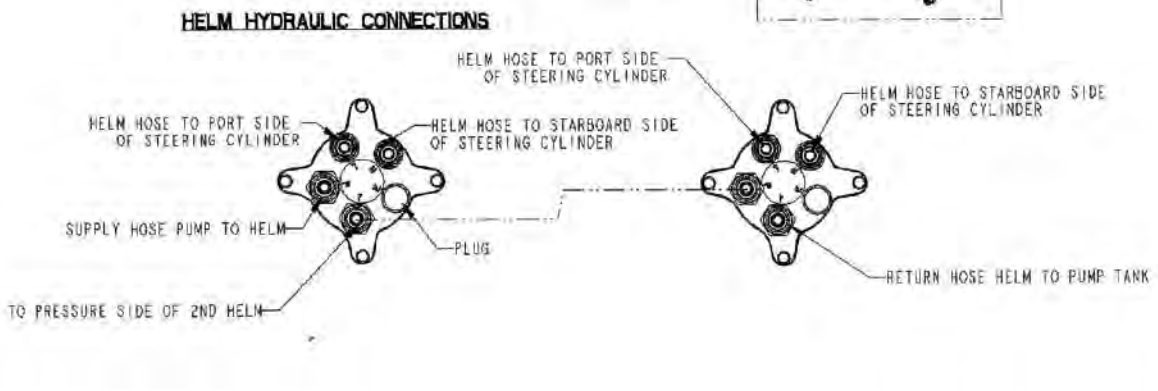

POWER STEERING TILT HELM TEMPLATE (OLD PATTERN)

Tilt System for Power Steering. (4 hole pattern - old design). Image size not to scale. Refer instruction sheet included in kit for correct template.

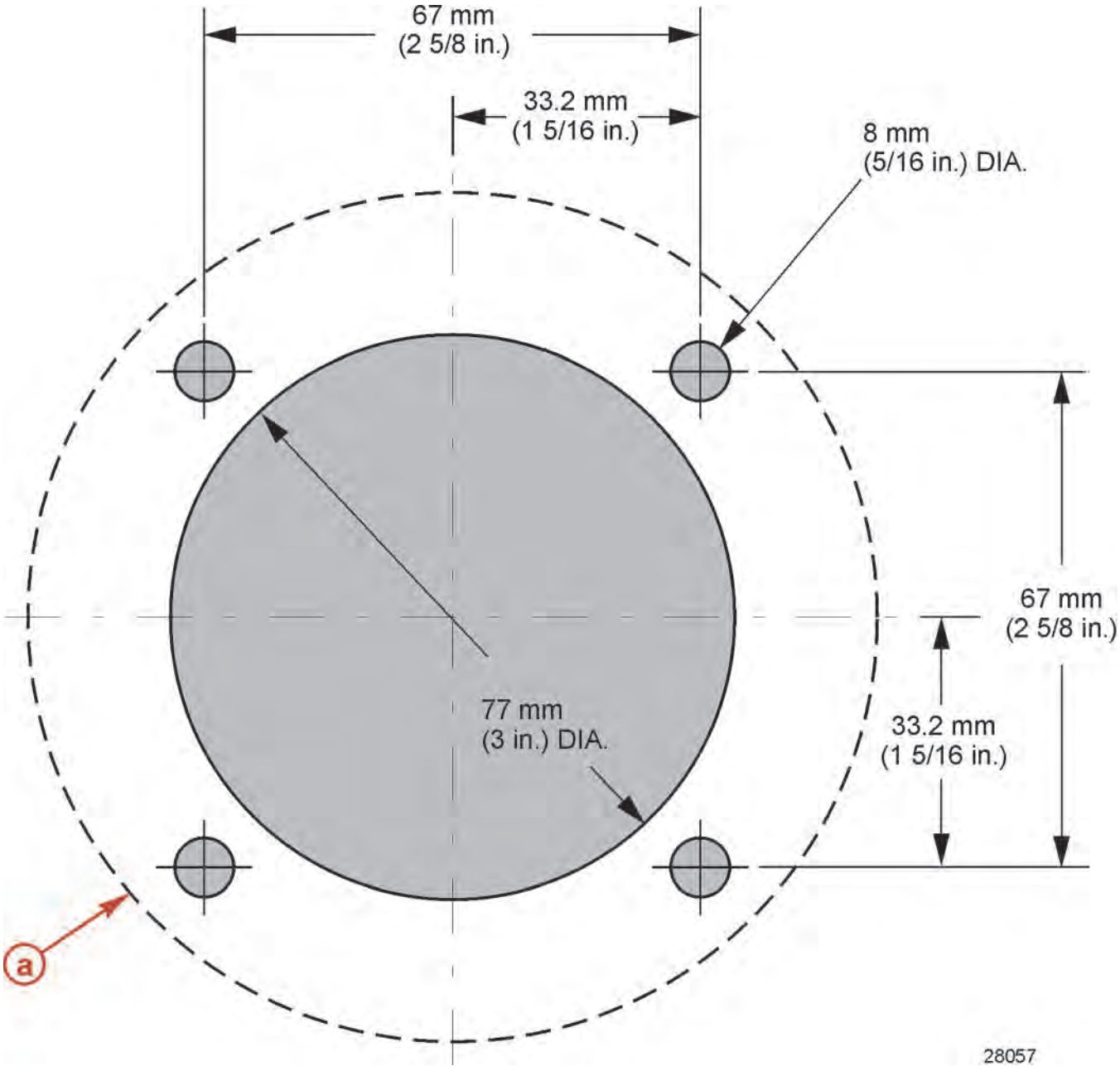

POWER STEERING TILT HELM TEMPLATE (VERTICAL/HORIZONTAL DECKING)

Tilt helm for Power Steering. (New 3 hole pattern) Image size not to scale. Refer instruction sheet included in kit for correct template.

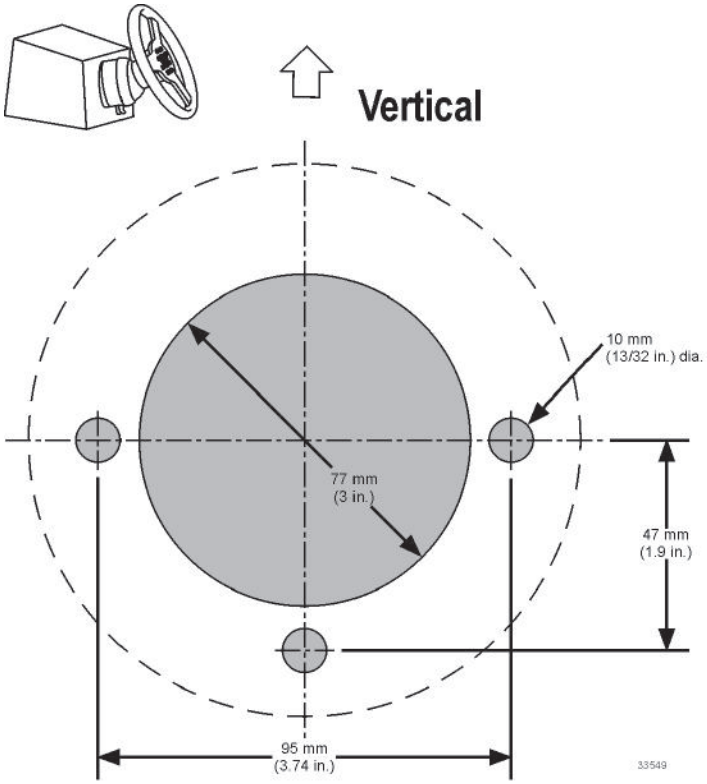

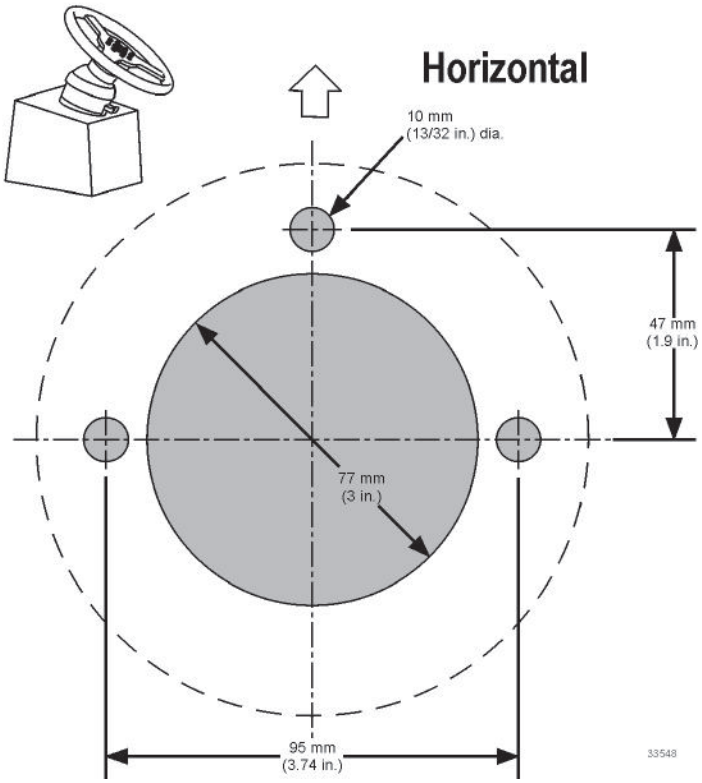

SINGLE ENGINE BATTERY AND ISOLATOR DIAGRAM(VERADO)

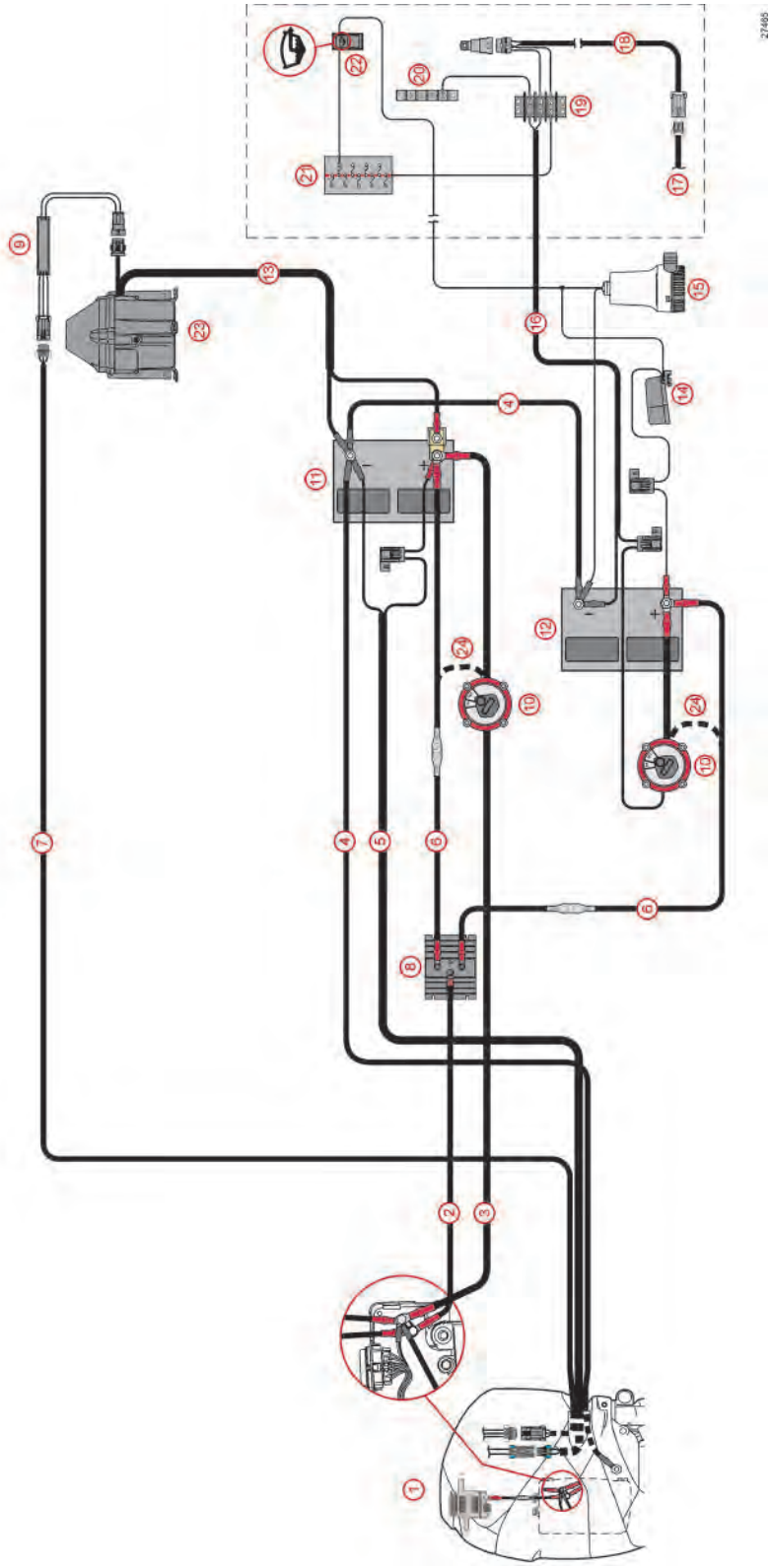

Single Engine Battery and Isolator Diagram

SINGLE ENGINE BATTERY AND ISOLATOR CALL OUT

Single Engine Battery and Isolator Diagram

1 - Engine
2 - Alternator wire
3 - Positive battery cable
4 - Negative battery cable
5 - DTS power harness
6 - Positive fused isolator wire
7 - Power steering signal harness
8 - Battery isolator
9 - Power steering driver module
10 - Battery switch
11 - Cranking battery
12 - Auxiliary battery
13 - Power steering pump power leads
14 - Bilge float switch
15 - Bilge pump
16 - Accessory power harness
17 - DTS command module harness
18 - Relay harness assembly
19 - Ground, 12V, and switch 12V terminal block
20 - Ground terminal block
21 - Fuse panel
22 - Bilge pump switch
23 - Power steering pump
24 - Alternate connection option

DUAL ENGINE BATTERY AND ISOLATOR DIAGRAM(VERADO)

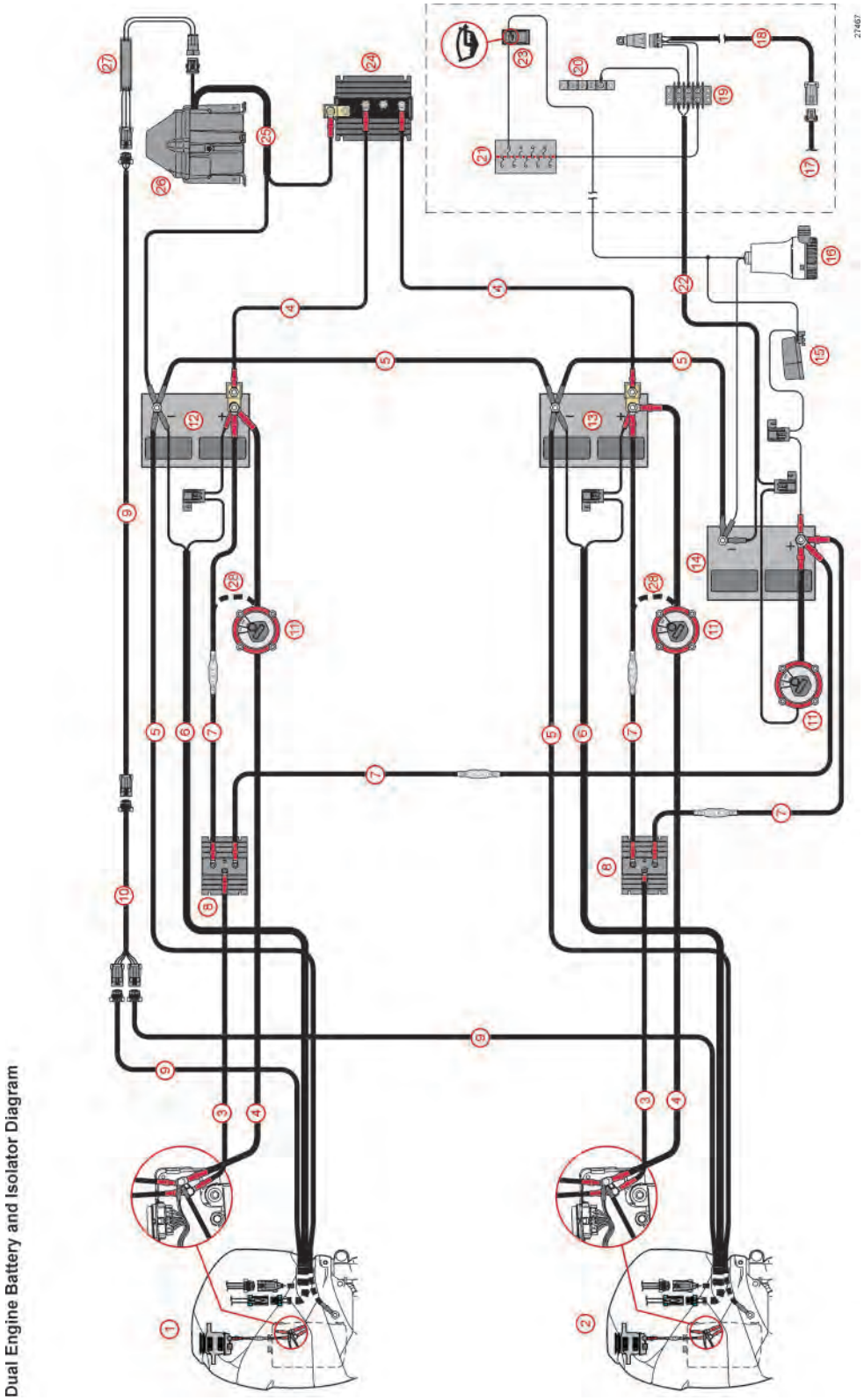

Dual Engine Battery and Isolator Diagram

DUAL ENGINE BATTERY AND ISOLATOR CALL OUT

Dual Engine Battery and Isolator Diagram

1 - Port engine
2 - Starboard engine
3 - Alternator wire
4 - Positive battery cable
5 - Negative battery cable
6 - DTS power harness
7 - Positive fused isolator wire
8 - Battery isolator
9 - Power steering signal harness
10 - Dual engine power steering adapter harness
11 - Battery switch
12 - Port engine cranking battery
13 - Starboard engine cranking battery
14 - Auxiliary battery
15 - Bilge float switch
16 - Bilge pump
17 - DTS command module harness
18 - Relay harness assembly
19 - Ground, 12V, and switch 12V terminal block
20 - Ground terminal block
21 - Fuse panel
22 - Accessory power harness
23 - Bilge pump switch
24 - Automatic power switch
25 - Power steering pump power leads
26 - Power steering pump
27 - Power steering driver module
28 - Alternate connection option

TRIPLE ENGINE BATTERY AND ISOLATOR DIAGRAM(VERADO)

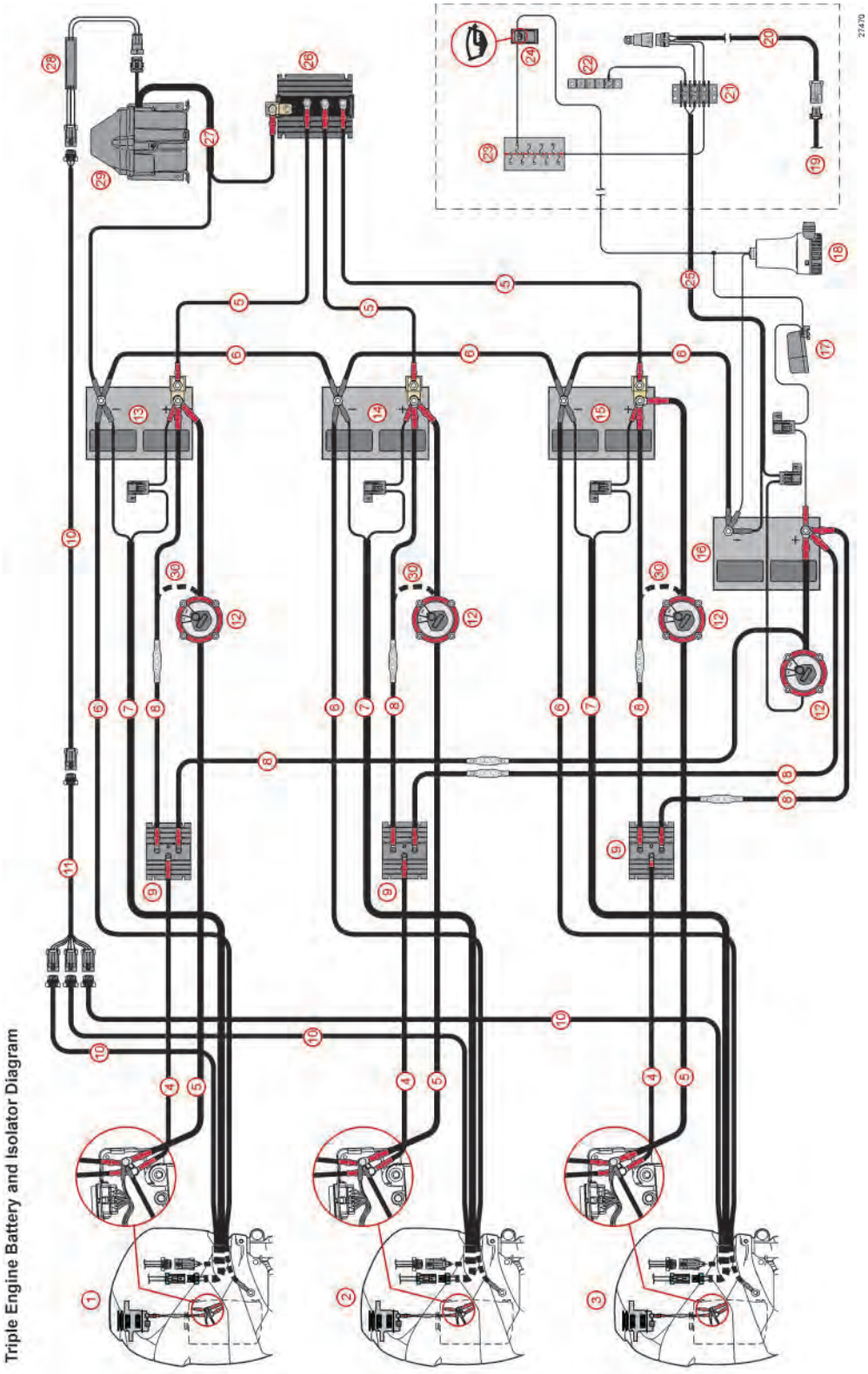

Triple Engine Battery and Isolator Diagram

TRIPLE ENGINE BATTERY AND ISOLATOR CALL OUT

Triple Engine Battery and Isolator Diagram

1 - Port engine
2 - Center engine
3 - Starboard engine
4 - Alternator wire
5 - Positive battery cable
6 - Negative battery cable
7 - DTS power harness
8 - Positive fused isolator wire
9 - Battery isolator
10 - Power steering signal harness
11 - Triple engine power steering adapter harness
12 - Battery switch
13 - Port engine cranking battery
14 - Center engine cranking battery
15 - Starboard engine cranking battery
16 - Auxiliary battery
17 - Bilge float switch
18 - Bilge pump
19 - DTS command module harness
20 - Relay harness assembly
21 - Ground, 12V, and switch 12V terminal block
22 - Ground terminal block
23 - Fuse panel
24 - Bilge pump switch
25 - Accessory power harness
26 - Automatic power switch
27 - Power steering pump power leads
28 - Power steering driver module
29 - Power steering pump
30 - Alternate connection option

QUAD ENGINE BATTERY AND ISOLATOR DIAGRAM(VERADO)

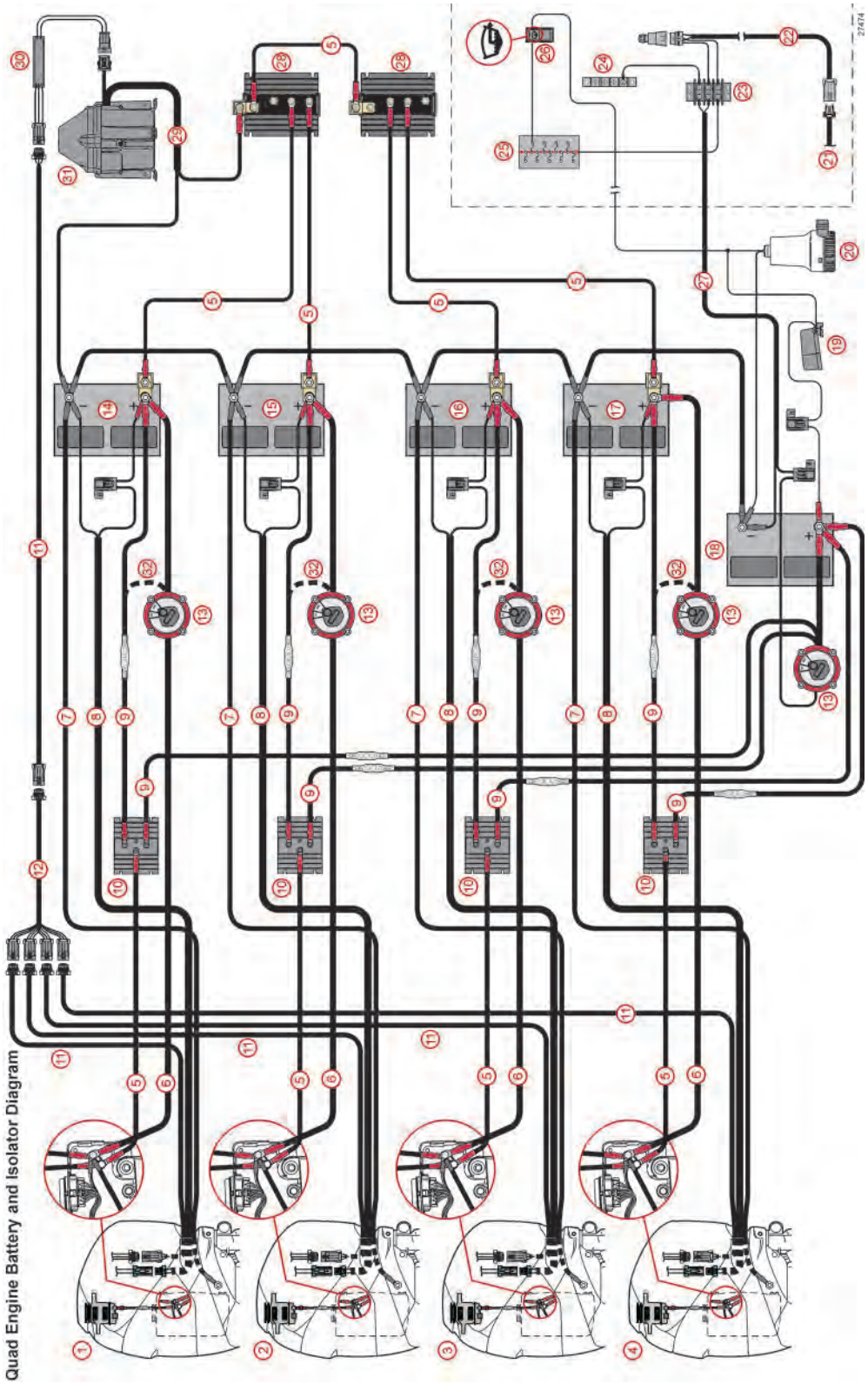

Quad Engine Battery and Isolator Diagram

QUAD ENGINE BATTERY AND ISOLATOR CALL OUT

Quad Engine Battery and Isolator Diagram

1 - Port outside engine
2 - Port inside engine
3 - Starboard inside engine
4 - Starboard outside engine
5 - Alternator wire
6 - Positive battery cable
7 - Negative battery cable
8 - DTS power harness
9 - Positive fused isolator wire
10 - Battery isolator
11 - Power steering signal harness
12 - Quad engine power steering adapter harness
13 - Battery switch
14 - Port outside cranking battery
15 - Port inside cranking battery
16 - Starboard inside cranking battery
17 - Starboard outside cranking battery
18 - Auxiliary battery
19 - Bilge float switch
20 - Bilge pump
21 - DTS command module harness
22 - Relay harness assembly
23 - Ground, 12V, and switch 12V terminal block
24 - Ground terminal block
25 - Fuse panel
26 - Bilge pump switch
27 - Accessory power harness
28 - Automatic power switch
29 - Power steering pump power leads
30 - Power steering driver module
31 - Power steering pump
32 - Alternate connection option

MEASURING OUTBOARD THROTTLE/SHIFT CABLES

Boats with side mount controls.

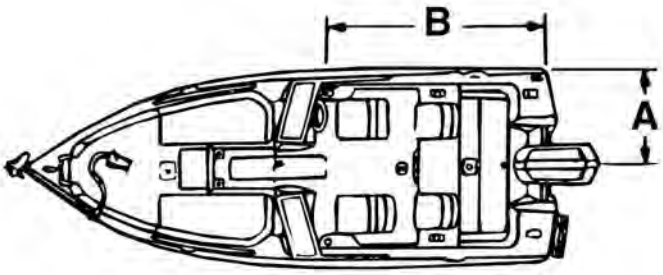

1. Add boat measurements A-B in inches (mm) and add 18 in. (457 mm) to the total. Dimension B represents the distance from the remote control location measured along the gunwale to the transom.
2. In dual engine installations, dimension A is measured from the gunwale to each engine center-line.
3. Divide by 12 in. (304 mm).
4. This is the length of the throttle and shift cables in feet (meters).
5. For left hand (Port) remote control installation, use the same measuring procedure following routing along the opposite side of the boat.

MEASURING MERCRUISER THROTTLE/SHIFT CABLES

Boats with side mount controls.

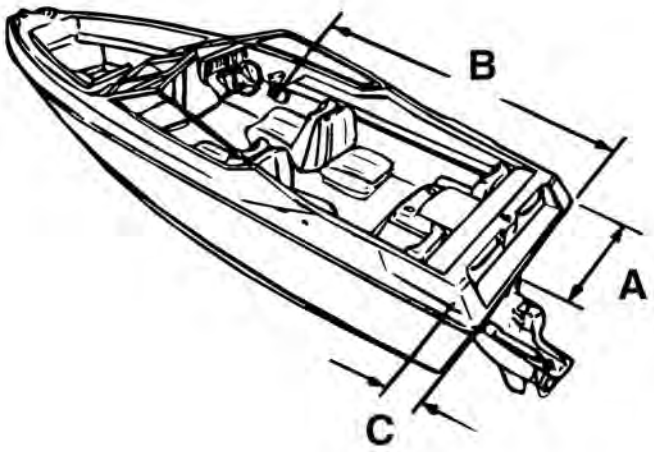

1. Add A-B-C in inches (mm). Dimension B represents the distance from the remote control location measured along the gunwale to the transom. The C dimension represents distance from the transom, forward to the throttle/shift attaching point.
2. In dual engine installations, dimension A is measured from gunwale to each engine center-line.
3. Divide by 12 in. (304 mm).
4. This is the length of the throttle and shift cables in feet (meters).
5. For left hand (Port) remote control installation, use the same measuring procedure following routing along the opposite side of the boat.

MEASURING CONSOLE CONTROL THROTTLE/SHIFT CABLES

Boats with either Outboard or MerCruiser applications.

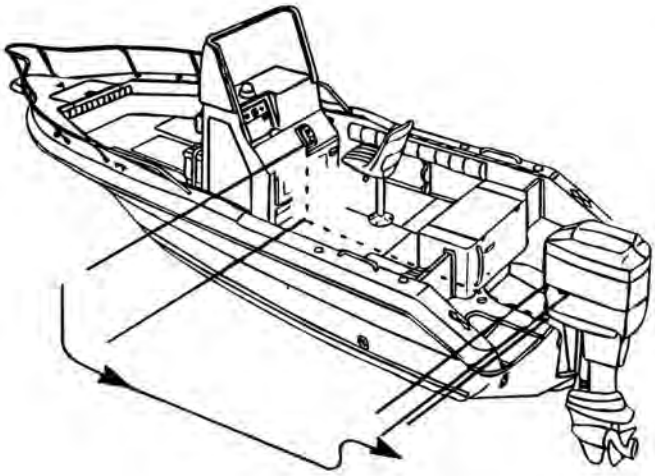

1. When measuring cable length for a console mount remote control, measure along the actual selected cable routing path and add 18 inches (457 mm) to the total.
2. Divide by 12 inches (304 mm).
3. This is the length of the throttle or shift cables in feet (meters).

ROTARY RIDEGUIDE SINGLE CABLE STEERING CLEARANCES

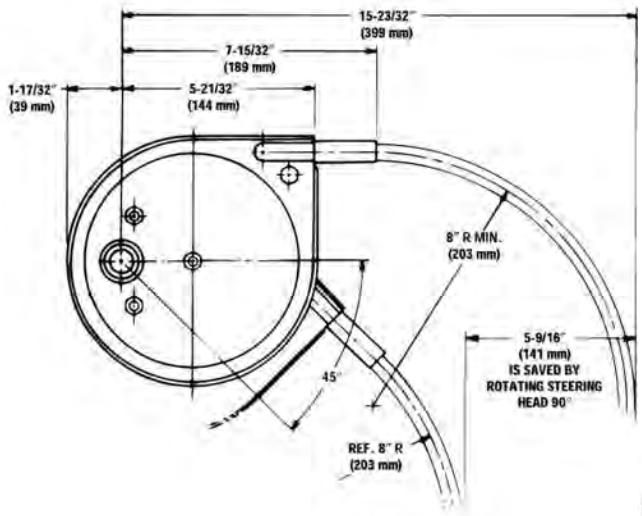

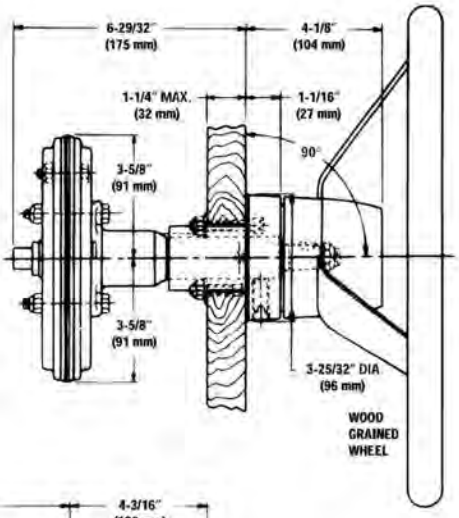

Complete 90° System (44588A__ Series)

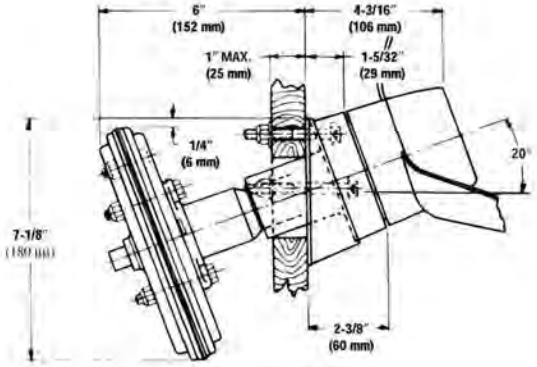

20° WEDGE KIT
76641A 2

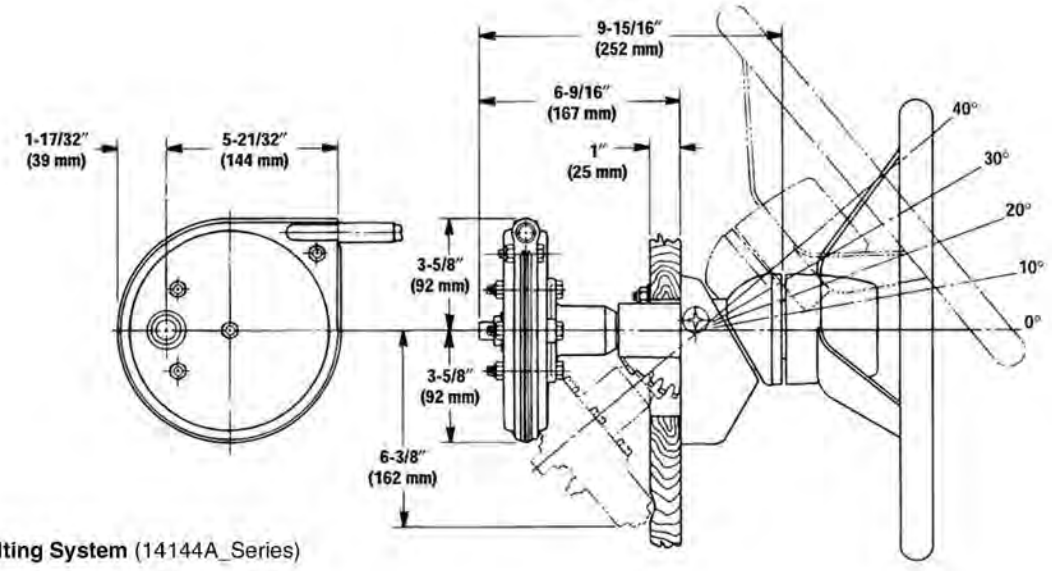

Complete Tilting System (14144A_Series)

ROTARY RIDEGUIDE TWO-CABLE STEERING CLEARANCES

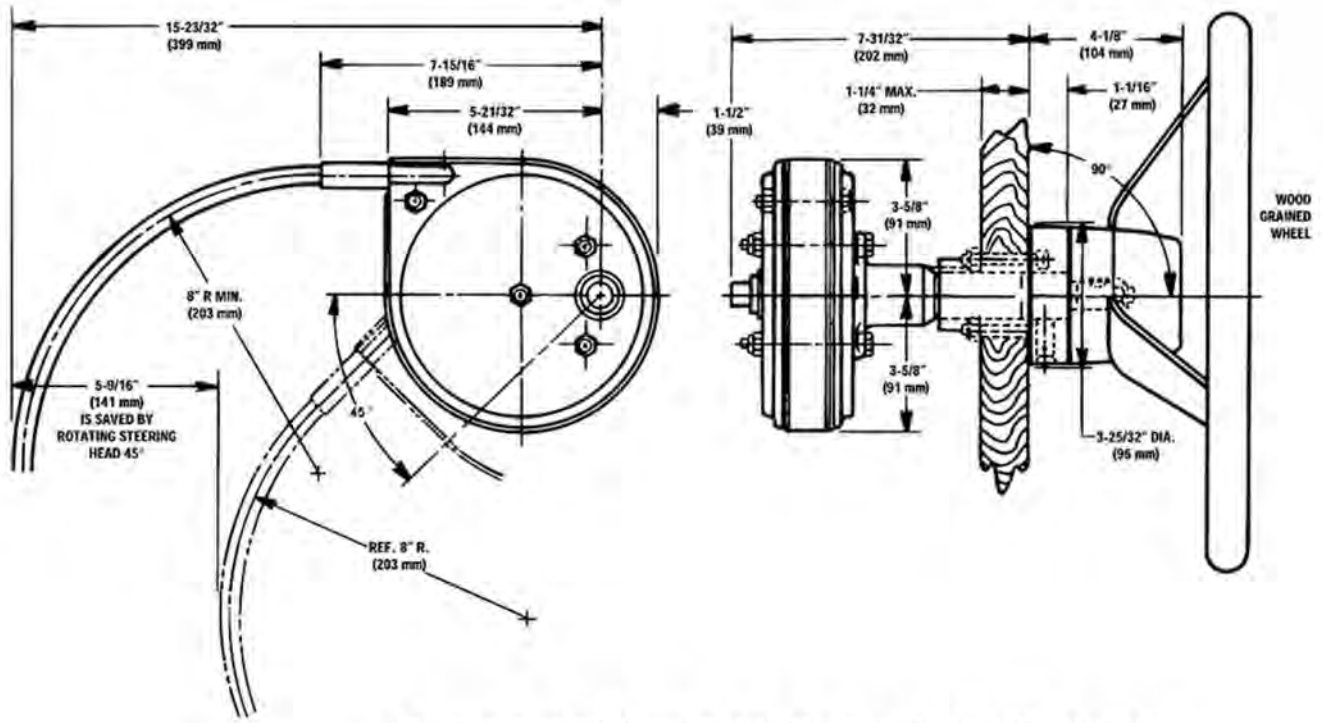

Complete 90° Two - Cable System (13762A_ Series)

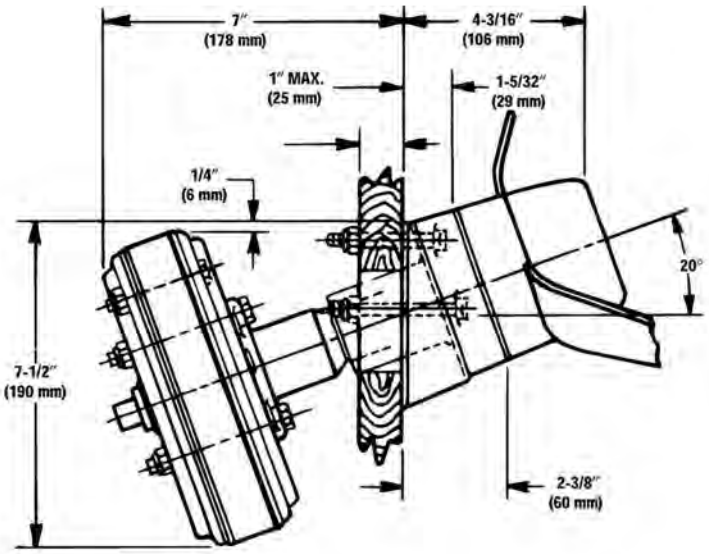

20° WEDGE KIT
76641A 2

STRAIGHT RACK RIDEGUIDE STEERING CLEARANCES

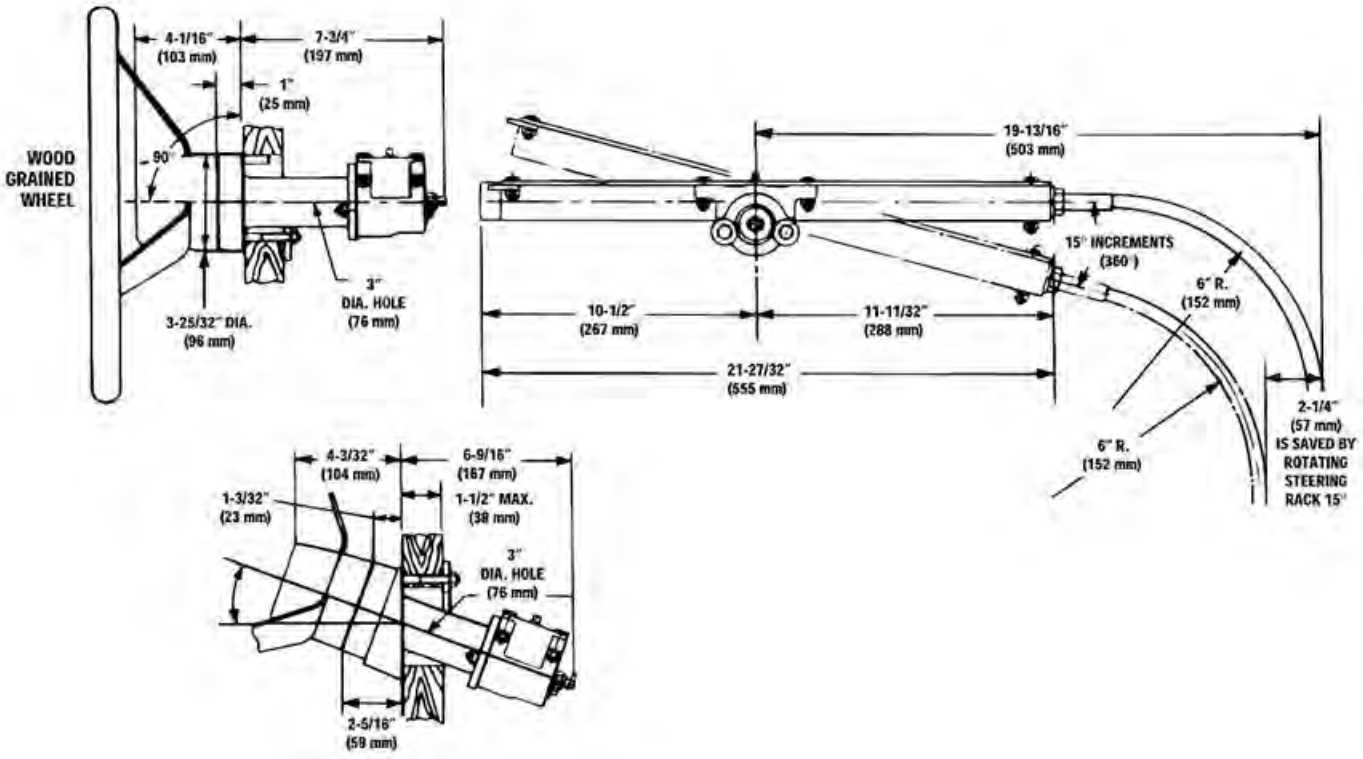

TILTING STRAIGHT RACK RIDEGUIDE STEERING CLEARANCE

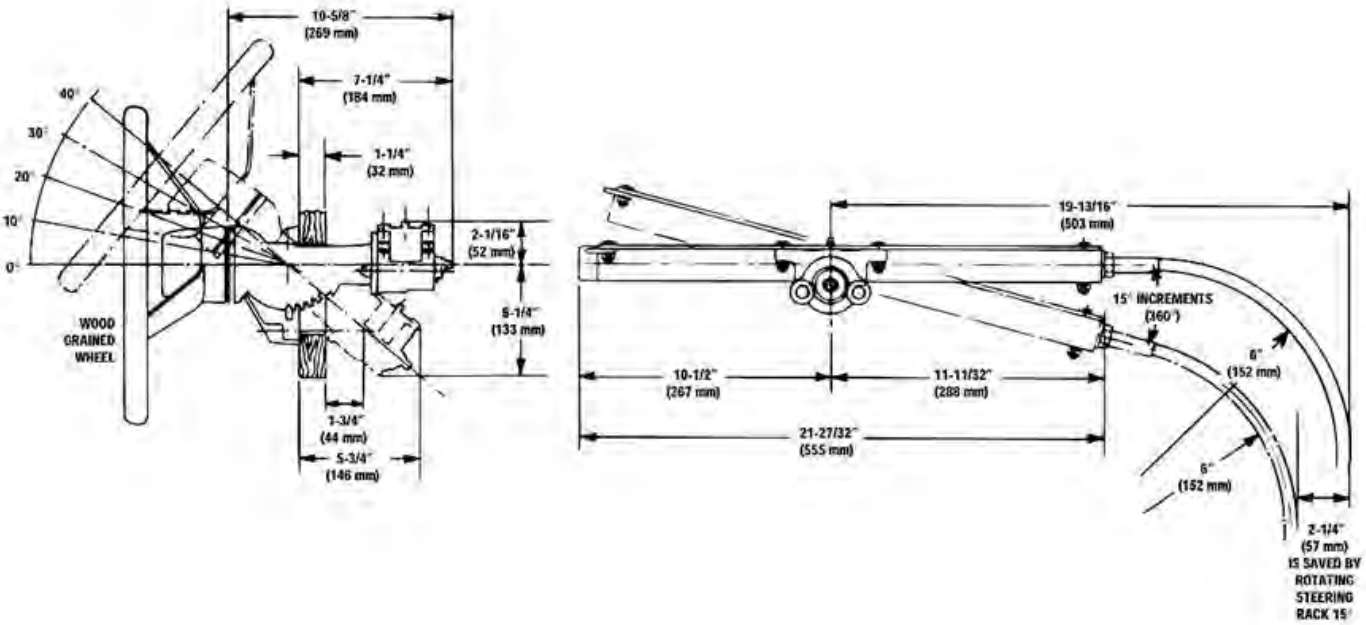

MEASURING OUTBOARD RIDEGUIDE CABLES

Dimensions allow for a 6 in. (152 mm) radius at the helm & an 8 in. (205 mm) radius at the transom location. Care should be taken in selection as too long or too short of a cable can both cause an increase in steering friction & shorter cable life.

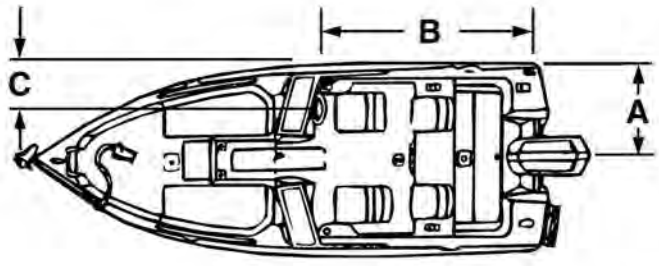

1. Dimension A represents gunwale to centerline of the engine. Dimension B is gunwale length to transom. Dimension C is gunwale to centerline of helm.
2. Add boat measurements A-B-C in inches (mm) and add 6 in. (152 mm) to the total for thru tilt-tube type of steering, or subtract 6 in. (152 mm) for transom mounted steering.
3. Divide by 12 in. (304 mm).
4. This is the length of the RideGuide cable in feet (meters).
5. Round to the nearest foot (meter) allowing adjustments for variations in cable routing, freeboard drop and radii.

MEASURING MERCRUISER RIDEGUIDE CABLES

Dimensions allow for a 6 in. (152 mm) radius at the helm & an 8 in. (205 mm) radius at the transom location. Care should be taken in selection as too long or too short of a cable can both cause an increase in steering friction & shorter cable life.

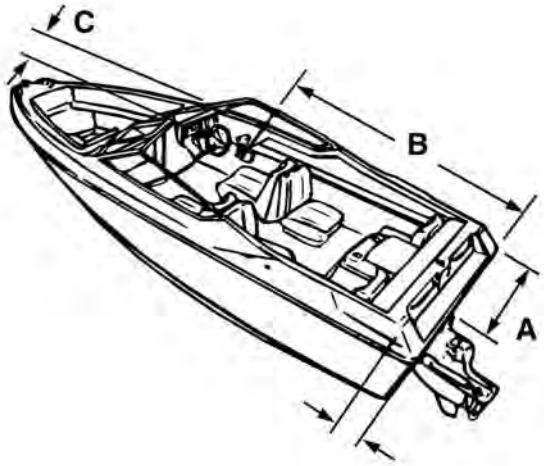

1. Dimension A represents gunwale to centerline of the engine. Dimension B is gunwale length to transom. Dimension C is gunwale to centerline of helm.
2. Add boat measurements A-B-C in inches (mm) and subtract 6 in. (152 mm) from the total.
3. Divide by 12 in. (304 mm).
4. This is the length of the RideGuide cable in feet (meters).
5. Round to the nearest foot (meter) allowing adjustments for variations in cable routing, freeboard drop and radii.

MEASURING FOR EXHAUST RISERS

The exhaust elbows must be located a sufficient distance above the waterline (at rest with maximum load) to prevent water from entering cylinders through the exhaust system. Available in both 3 in. (76 mm) or 6 in. (152 mm) sizes, risers may be selected using the required minimum distance chart found in the appropriate engine installation manual.

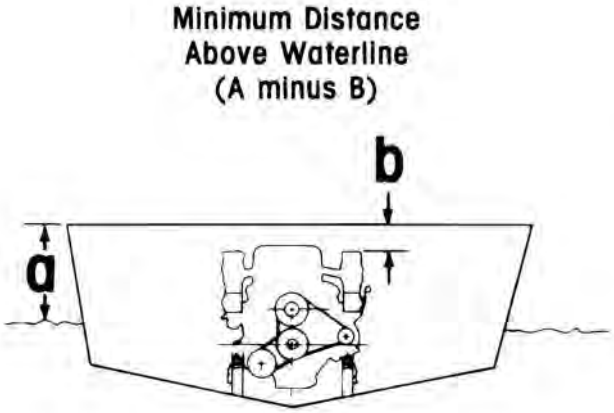

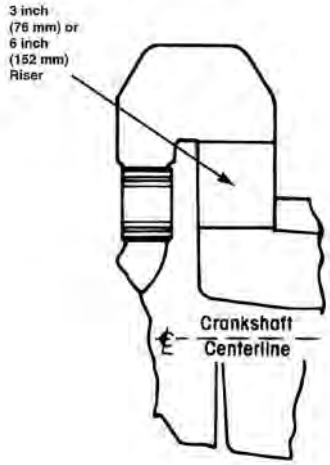

DUAL REMOTE OIL TANK SCHEMATIC

Two standard Mercury 3 US gal (11 L) oil tanks may be series connected as shown. The hose from tank no. 2 to tank no. 1 must not exceed 8 ft.(2.44 meters). All precautions and rules for the filling & bleeding of a single tank apply to this two-tank arrangement. No remote tank should be installed higher than the outboard pressure relief valve. Dissimilar oil levels in the tanks at start up will self adjust during running to maintain oil in primary tank #1. Oil need only be present in tank #1 to work.

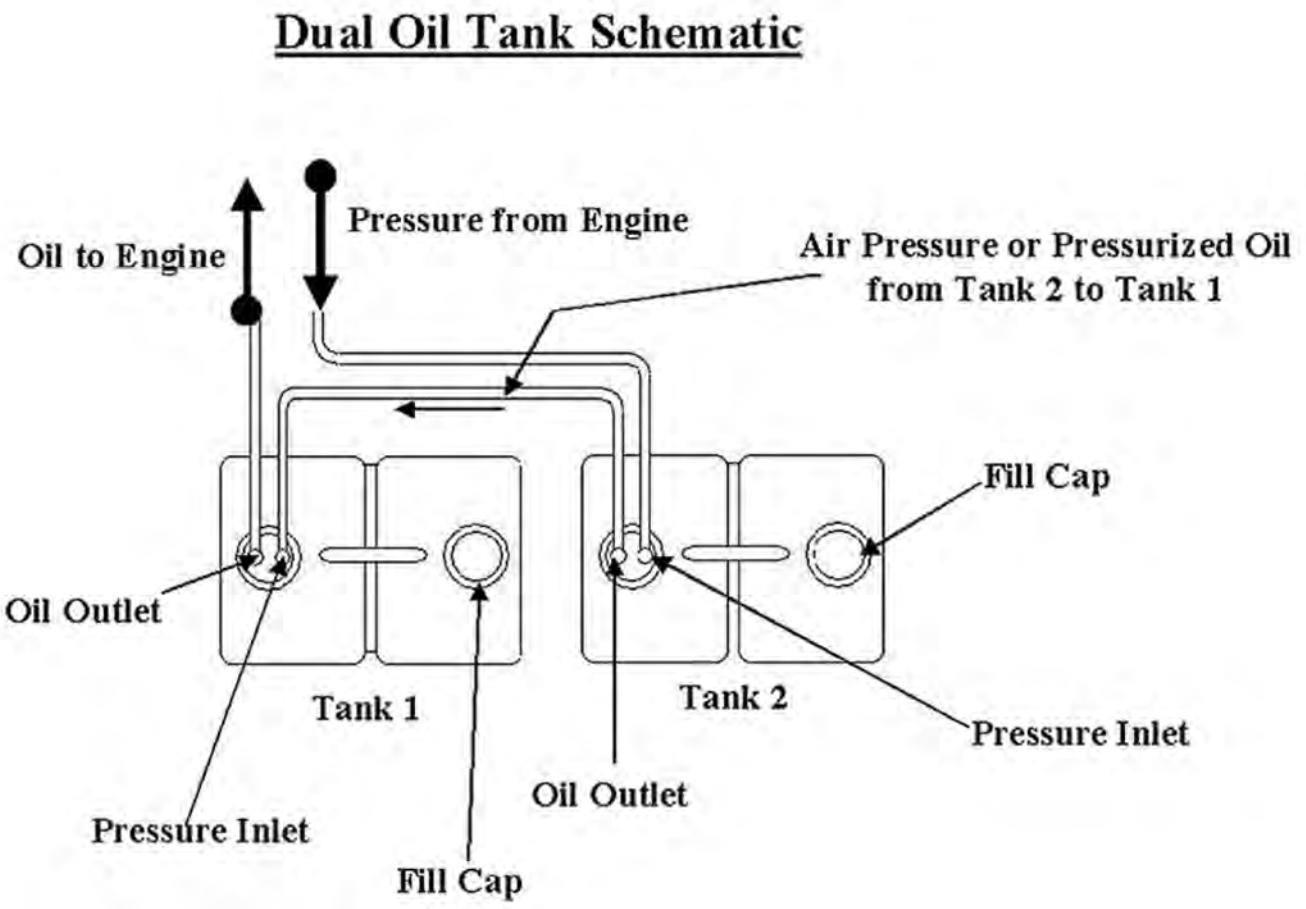

Notes:

TABLE OF CONTENTS

Propeller Selector 797

Step 1 - Select Hardware 798

Step 2 - Select Propeller 799

Propeller Material and Blade Facts 800

Flo-Torq Hub System Selector 801

Propeller Selecting Tools 802

Mercury Propeller Rigging Chart 803

- **Bass: 115 - 250 HP** 818
- **Freshwater Fish / Runabout / Fish and Ski / Mod V / V Bottom: 60 - 350 HP** 803
- **Offshore / Bay / Flats Center Console: 40 - 350 HP** 820
- **Tri / Pontoon: 40 - 350 HP** 809

Mercury Propeller Application Charts 830

- **Mercury MerCruiser Application Charts** 836
- **Mercury Outboard Application Charts** 830
- **Mercury Zeus Application Charts** 839
- **Non-Mercury Engine Application Charts** 840

Mercury Propeller Type 844

- Alpha 4 850
- Black Max 846
- Black Max Mercury/Mariner 135-300, MerCruiser Alpha/Bravo I 849
- Black Max Mercury/Mariner 2.5-3.5 HP 846
- Black Max Mercury/Mariner 25/30 HP FS 847
- Black Max Mercury/Mariner 25-30 BF FS, 30-40 TS/FS, 50-60 TS/FS 848
- Black Max Mercury/Mariner 40-60 BigFoot (4.25 In.) FourStroke 848
- Black Max Mercury/Mariner 40-60 HP BF FS, 75-125 HP 848
- Black Max Mercury/Mariner 4-5 HP, 4-6 HP FS . . 846
- Black Max Mercury/Mariner 6-15 HP, 9.9-15 HP FS 846
- Black Max Mercury/Mariner 8/9.9 HP 4-Stroke . . . 846
- Black Max Mercury/Mariner 9.9-15 BF FS 20-25 HP 847
- Black Max Mercury/Mariner 9.9 BF 15/20 HP (4-Stroke) 847
- Bravo I 860
- Bravo I FS Pro Finished 862
- Bravo I Lab Finished 864
- Bravo I OC Lab Finished 863
- Bravo I Vented Lab Finished 863
- Bravo I XC Pro Finished 862
- Bravo I XS Pro Finished 861
- Bravo Three 869
- Bravo Three Diesel 870
- Bravo Three XR Pro Finished 871
- Bravo Two - Aluminum 868
- Bravo Two - Stainless Steel 869
- Chopper II - Mercury 115 - 300 HP 873
- Chopper II - Mercury 20 - 25 HP 873
- Chopper II - Mercury 30 (U.S. Origin) and 40 - 60 HP 873
- Clear Machete 845
- Cleaver 3 Blade - Outboard 115 - 300 HP 875
- Cleaver 40 - 60 HP 875
- CNC Cleaver 5 Blade 15 Degree Rake Lab Finished 876
- CNC Cleaver 5 Blade 18 Degree Rake Lab Finished 876
- CNC Cleaver 5 Blade 21 Degree Rake Lab Finished 876
- CNC Cleaver 6 Blade 15 Degree Rake Lab Finished 877
- CNC Cleaver 6 Blade 18 Degree Rake Lab Finished 877
- CNC Cleaver 6 Blade 21 Degree Rake Lab Finished 877
- Enertia 851
- Enertia ECO 857
- Enertia ECO XP 857
- Fury 853

Fury 4 854
HighFive 860
H - Series Propellers 872
Laser II 855
Laser II Mercury/Mariner 40-60 BF, 75-125 855
Lightning E.T. 874
Maximus 865
Maximus Long Tube Lab Finished 866
Maximus Short Tube Lab Finished 867
Maximus ST Pro Finished 865
Mercury Outboard Propeller Selector Chart . . . 844
Mercury Propeller Selector 844
Mercury SternDrive Propeller Selector Chart . . 845
Mirage Plus 856
M - Series Propeller 872
Pro E.T.® 874
Pro Max® 875
Revolution 4 858
Revolution 4 Lab Finished 859
Revolution 4 XC 858
Revolution 4 XP 859
Spitfire 849
Spitfire 25-30 HP 849
Spitfire 40-60 HP 849
Spitfire 40 Bigfoot - 125 HP 850
SpitFire 90 CT-300 HP, MerCruiser Alpha/Bravo I 850
Spitfire X7 40 CT - 115 HP Standard 852
Tempest Plus 854
Trophy Plus 855
Trophy Sport 856
Vengeance 852
Vengeance Mercury/Mariner 135-300, MerCruiser Alpha & Bravo I 853
Vengeance Mercury/Mariner 25/30 Hp 4-Stroke . . 852
Vengeance Mercury/Mariner 25-30 BF FS, 30-40 TS/FS, 50-60 TS/FS 852
Vengeance Mercury/Mariner 40-60 BF, 75-125 TS/FS 853
Vengeance Mercury/Mariner 9.9-15 BF FS, 20-25 HP 852
Vensura 860
Z - Series Propeller 871

Mercury Racing Propeller Charts 878

Bravo I - 4 Blade SS Lab Finished 881
Bravo I - 4 Blade SS Lab Finished With PVS . . 881
Bravo I FS Pro Finished 880
Bravo I OC Lab Finished 881
Bravo I XC Pro Finished 880
Bravo I XS Pro Finished 880
Bravo Three XR Pro Finished 884
Chopper II - 3 Blade SS 878
Cleaver - 3 Blade SS Propeller 878
Cleaver - 3 Blade SS Propeller 878
CNC Cleaver 5 Blade 15 Degree Rake Pro Finished Sterndrive Propeller 884
CNC Cleaver 5 Blade 18 Degree Rake Pro Finished Sterndrive Propeller 891
CNC Cleaver 5 Blade 21 Degree Rake Pro Finished Sterndrive Propeller 895
CNC Cleaver 6 Blade 15 Degree Rake Lab Finished Sterndrive Propeller 899
CNC Cleaver 6 Blade 18 Degree Rake Lab Finished Sterndrive Propeller 905
CNC Cleaver 6 Blade 21 Degree Rake Lab Finished Sterndrive Propeller 907
Enertia ECO XP Propeller 881
Lightning E.T. - 3 Blade SS 878
Maximus Long Tube 5 Blade SS Lab Finished 883
Maximus Short Tube 5 Blade SS Lab Finished 883
Maximus ST Pro Finished 882
Pro E.T.® - 4 Blade Stainless Steel 879
Pro Max ® - 4 Blade Stainless Steel 879
Revolution 4 Lab Finished Propeller 882
Revolution 4 XC Pro Finished Propeller 882
Revolution 4 XP Pro Finished Propeller 882

Quicksilver Propeller Application Charts 911

Evinrude/Johnson Outboard Application Charts 911
Force Outboard Application Charts 914

Honda Outboard Application Charts 916
MerCruiser Sterndrive Application Charts 935
Mercury/Mariner Outboard Application Charts 919
OMC Sterndrive Application Charts 940
Suzuki Outboard Application Charts 925
Tohatsu/Nissan Outboard Application Charts . 929
Volvo Penta Sterndrive Application Charts . . . 943
Yamaha Outboard Application Charts 931
Yamaha Sterndrive Application Chart 945

Quicksilver Propeller Type 947

Black Diamond 948
Black Diamond 4 949
Black Diamond BII - Bravo Two 954
Black Diamond for 85-140 hp Evenrude/Johnson V-4 949
Black Diamond for Standard 40-60 hp Outboard . . 949
Black Diamond Outboard/Sterndrive with 4 3/4 in Gearcase (Group E) 948
Black Diamond Outboard with 4 1/4 in Gearcase (Group D) 948
Lightspeed 953
Nemesis 950
Nemesis 25-30 HP 950
Nemesis 40-60 HP 950
Nemesis 40 Bigfoot - 125 HP 950
Nemesis 90 CT - 300 HP 951
QST 5 954
Quicksilver Outboard Propeller Selector Chart 947
Quicksilver Q3 952
Quicksilver Q4 953
Quicksilver SternDrive Propeller Selector Chart 948
Silverado 951
Thunderbolt 953
Thunderbolt BIII - Bravo Three 955
Thunderbolt - For Volvo Penta DPS Drives 955
Thunderbolt - For Volvo Penta IPS Drives 956
Torrent 954
Typhoon 954

OEM - Quicksilver Propeller Cross Reference 957

Evinrude/Johnson/OPMC Prop Cross Reference 957
Force Propeller Cross Reference 958
Honda Propeller Cross Reference 958
Mercury/Mariner/MerCruiser Prop Cross Reference 959
Suzuki Propeller Cross Reference 961
Tohatsu/Nissan Propeller Cross Reference . . . 961
Volvo Propeller Cross Reference 962
Yamaha Propeller Cross Reference 962

Historical Propeller Charts 964

Chrysler Outboards 985
Force Outboards 982
Mariner Electric Motor 974
Mariner Outboard 976
MerCrusier Sterndrives 985
Mercury Electric Motors 964
Mercury Outboard 964

Propeller Hardware and Accessories 996

Anodes 1005
Cotter Pins 1014
Diffuser Rings 1006
Flo-Torq II, III, IV & HD Hub Kits 998
Flo-Torq II Application Charts 996
Flo-Torq Reflex Hub Kits 997
Hub Cross-Reference Chart 996
Marine Grease 1032
Mercury Racing Propeller Accessories 1031
Paints 1032
Performance Vent Plugs 1027
Prop Nut Kits 1007
Prop Nuts 1011
Rubber Hubs 1024
Shear Pins 1013
Skegs 1026
Spacers 1015

Stainless Steel Impellers 1028
Tab Washers 1018
Thrust Washers 1019
Tools 1030
Trim Tabs 1023
Washers 1017

PROPELLER SELECTOR

HOW-TO-FIND THE RIGHT PROPELLER

- Find the make, model, year and horsepower of the engine you are propping.
- For a Mercury or MerCruiser engine, turn to the Mercury propeller application charts in this guide and locate the table that contains propellers designed for the engine you are propping.
- Propellers for older Mercury motors can be found in the Historical Propeller charts section of the guide.
- For a non-Mercury outboard or stern drive engine, please reference the Quicksilver section of the propeller guide. Quicksilver propellers are designed to fit a wide variety of competitive applications.
- Many Quicksilver propellers require a hub kit (sold separately) to complete the installation. You can find a Quicksilver 2 step reference guide at the beginning of the propeller guide. This guide will assist you in locating the proper hub kit for your engine.

PITCH & DIAMETER

- Each propeller in this guide has a listed diameter and pitch. The diameter is the first number listed, followed by the pitch. For a 14 X 19 Propeller, this means that the propeller has a diameter of 14 inches and has 19 inches of pitch.

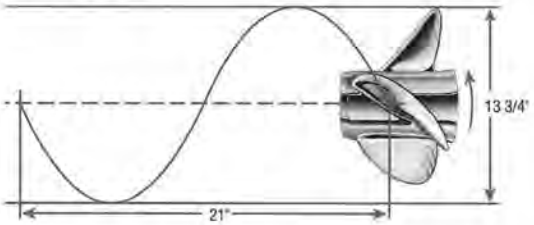

- Typically when selecting a propeller, you only need to select the right pitch for your boat. The correct diameter for that propeller has usually been predetermined by our engineering staff for most propellers. In general, high horsepower applications require more diameter. Propeller diameter typically decreases as pitch increases within a given propeller line.

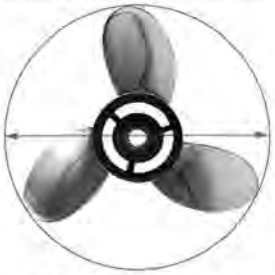

- The diameter of the propeller is defined as the distance across the imaginary circle that is made as the propeller rotates.
- The pitch of a propeller is the theoretical distance in inches that a propeller would move forward in one revolution. The higher the pitch an engine can turn, the faster the boat will go.

DETERMINING THE CORRECT PITCH

- Consult the owner's manual to find the recommended full throttle (W.O.T.) RPM range for your engine.
- Run the boat with moderate load in an open stretch of water at W.O.T trimming the engine up for speed. Record the maximum RPM during the run. Repeat the run in the opposite direction to compensate for wind and current. The average of these two numbers is your W.O.T. RPM.
- The best compromise of acceleration, top speed and fuel economy can be obtained when the W.O.T. RPM is in the middle of the manufacturers suggested RPM range.
- An over propped boat will cause the engine to lug, with the engine unable to reach the suggested W.O.T. RPM range. An over propped boat may also exhibit sluggish acceleration and poor hole shot.
- An under propped boat will over-rev, exceeding the manufacturers recommended W.O.T. RPM range.
- If the current propeller isn't in the manufacturers suggested RPM range, select a replacement propeller based on the following guidelines:
  - o Adding one inch of pitch will reduce W.O.T RPM by 150-200 RPM
  - o Subtracting one inch of pitch will increase W.O.T RPM by 150-200 RPM

⚠CAUTION

Operating the engine outside of the recommended RPM range can cause severe damage to your engine and may void the warranty. Always test the boat on the water after you install a new propeller.

STEP 1 - SELECT HARDWARE

MERCURY Propellers

Step 1: Select Hardware

Locate the model, year and horsepower of your outboard or sterndrive to find your hub kit.
Match the 'options' color to a like-colored propeller choice in step 2.

Mercury®, Mariner®, and Force® Outboards, and Mercruiser® Sterndrives	Options	Hub Kit
Mercury 350 Verado, Mercury Racing 400R (1- 1/4 shaft)	✓	8M0101601
Mercury / Mariner 135 - 250 HP, Verado 200-300 HP, Mercruiser 120-375 HP Alpha and Bravo One sterndrives	✓	835257K1
Mercury/ Mariner 75 HP 1984 and newer, 90 & 115 HP 1978 and newer, 125 HP 1994 and newer	✓	835257K1
Verado 135 - 200 HP 4-Cylinder	✓	835257K10
Mercury/ Mariner 40-60 HP BigFoot and 90-115 HP FourStroke outboards	✓	835257K9
Mercury 225 EFI FourStroke outboards	✓	835274K1
Mercruiser 400 HP + Bravo One sterndrives	✓	835258K2
Mercury V6 used with surfacing propellers; Revolution4, Trophy Plus, Fury and Tempest	✓	835257K6
Mercury Racing Choppers and Cleavers for V6 outboards	✓	835258K1
Mercruiser XZ & XR Racing Sport and Torque Master, Verado SCI 350 HP (1-1/4 shaft)	✓	840389K06
Force 75 HP 1999, 90-150 Hp 1995 and newer outboards	✓	835257K1

Yamaha® Outboards and Sterndrives	Options	Hub Kit
Yamaha 50-100 HP outboards with splined forward washer	✓	835272Q 1
Yamaha 115 & 130 HP 1984 and newer	✓	835271Q 2
Yamaha 150-300 HP HPDI and VMAX and 130-300 HP sterndrives	✓	835271Q 2
Yamaha 150-300 HP 4-Stroke outboards (excluding V8 models)	✓	835274Q 1
Yamaha 200-250 HP SHO 4-Stroke outboards	✓	8M0075402

Evinrude® and Johnson® Outboards, Volvo® and OMC® Sterndrives	Options	Hub Kit
Johnson 90-115 HP 4-Stroke outboards	✓	835283Q 1
Johnson 140 HP 4-Stroke outboards	✓	835283Q 2
Evinrude/Johnson V4 outboards	✓	835266Q 1*
Evinrude ETEC G2 200-300 HP	✓	8M0107220
Evinrude/Johnson outboards and OMC sterndrives with V6 and V8 gearcases, Cobra and King Cobra sterndrives 1991 and newer	✓	835265Q02
Evinrude/Johnson outboards and OMC sterndrives with V6 and V8 gearcases, Cobra and King Cobra sterndrives 1990 and older**	✓	835267Q 1
Volvo SX 1996 and newer, OMC Cobra SX sterndrives 1994 and newer, 7.4L 1994 and newer (19 tooth spline)**	✓	835270Q 1

Suzuki® Outboards	Options	Hub Kit
Suzuki 60 HP 4-Stroke 1998 and newer, 70 HP 4-Stroke 1998-2008, and 75-140 HP 2-Stroke outboards	✓	835282Q 1*
Suzuki 70-90 HP 2009 and newer outboards	✓	835283Q03
Suzuki 90-115 HP 4-Stroke 2001-2008 outboards	✓	835283Q 1
Suzuki 100-115 Hp 4-Stroke 2009 and newer, 140 HP 4-Stroke outboards	✓	835283Q 2
Suzuki 150-300 HP 4-Stroke, 150-225 2-Stroke outboards	✓	835281Q 1

Honda® Outboards	Options	Hub Kit
Honda 75-90 HP outboards 1998 and older	✓	835277Q 1
Honda 75-90 HP outboards 1999 and newer, and 115-130 HP	✓	835279Q 2
Honda 135-225 HP 4-Stroke outboards	✓	835278Q 1

Tohatsu® and Nissan® Outboards	Options	Hub Kit
60-140 HP outboards	✓	835284Q 1

*Small labyrinth seal propeller required. See Mercury Accessories Guide for full selection of application specific propellers.

**WARNING: Interference exists between the ribs on Quicksilver Stainless Steel Propellers and the add-on OMC/Volvo Anode P/N 3852970. Anode and attaching hardware must be removed for proper clearance.

Honda is a registered trademark of Honda Motor Co. Nissan is a registered trademark of Nissan Motor Co., Inc. Suzuki is a registered trademark of Suzuki Motor Co., Ltd. Tohatsu is a registered trademark of Tohatsu Corp. Volvo is a registered trademark of Volvo Ltd. Yamaha is a registered trademark of Yamaha Corp. Evinrude, Johnson and OMC are registered trademarks of Bombardier. All other trademarks belong to the Brunswick Corporation.

©2015 Mercury Marine. A division of Brunswick Corporation. All rights reserved.

PN 8M0115216

STEP 2 - SELECT PROPELLER

MERCURY Propellers

Step 2: Select Propeller

Select a propeller by choosing a diameter and pitch that best compliments your boat and general usage.

Dia X Ptch	Matl	Blades	Model	LH	RH
12 1/2 X 23	Alum	3	Black Max	-	77350A45
12 3/4 X 21	Alum	3	Black Max	-	77348A45
13 X 19	Alum	3	Black Max	-	77346A45
13 1/4 X 17	Alum	3	Black Max	-	77344A45
13 1/4 X 16	Alum	3	Black Max	-	854360A45
13 3/4 X 15	Alum	3	Black Max	-	77342A45
14 X 13	Alum	3	Black Max	-	77340A45
14 X 13	Alum	3	Black Max Pontoon	-	77340CP1
14 X 11	Alum	3	Black Max	-	77338A45
14 X 11	Alum	3	Black Max Pontoon	-	77338CP1
14 X 10	Alum	3	Black Max	-	854342A45
14 X 10	Alum	3	Black Max Pontoon	-	854342CP1
14 X 9	Alum	3	Black Max	-	854340A45
13 3/4 X 10	Alum	4	Spitfire Pontoon	-	8M8026555
13 3/4 X 11	Alum	4	Spitfire Pontoon	-	8M8026560
13 3/4 X 13	Alum	4	Spitfire Pontoon	-	8M8026570
12 3/4 X 15	Alum	4	Spitfire	-	8M8026580
12 3/4 X 17	Alum	4	Spitfire	-	8M8026590
12 3/4 X 19	Alum	4	Spitfire	-	8M8026600
12 3/4 x 21	SS	4	SpitFire X7	-	8M0055551
12 3/4 x 19	SS	4	SpitFire X7	-	8M0055550
13 x 17	SS	4	SpitFire X7	-	8M0055549
13 1/2 x 15	SS	4	SpitFire X7	-	8M0055548
14 x 13	SS	4	SpitFire X7	-	8M0055547
13 X 18	SS	3	Vengeance	-	16988A46
13 1/8 X 16	SS	3	Vengeance	-	16986A46
13 3/8 X 14	SS	3	Vengeance	-	17314A46
14 X 12	SS	3	Vengeance	-	17312A46
14 X 10	SS	3	Vengeance	-	17310A46
13 3/4 X 27	SS	4	Trophy Plus	-	8M8026830
13 3/4 X 26	SS	4	Trophy Plus	-	825944A47
13 3/4 X 25	SS	4	Trophy Plus	-	825942A47
13 3/4 X 24	SS	4	Trophy Plus	-	825940A48
13 3/4 X 23	SS	4	Trophy Plus	-	825938A47
13 3/4 X 21	SS	4	Trophy Plus	-	825934A47
13 3/4 X 19	SS	4	Trophy Plus	-	825932A46
13 3/4 X 17	SS	4	Trophy Plus	-	825930A46
14 X 23	Alum	3	Black Max	-	832834A45
14 1/4 X 21	Alum	3	Black Max	-	832832A45
14 1/2 X 19	Alum	3	Black Max	-	832830A45
15 X 17	Alum	3	Black Max	-	832828A45
16 X 16	Alum	3	Black Max	-	16440A45
16 X 16	Alum	3	Black Max Pontoon	-	16440CP1
15 1/4 X 15	Alum	3	Black Max	-	78116A45
15 1/2 X 15	Alum	3	Black Max Pontoon	-	78116CP1
15 1/2 X 18	Alum	3	Black Max	-	11324A45
16 X 14	Alum	3	Black Max	-	16438A45
16 X 14	Alum	3	Black Max Pontoon	-	16438CP1
16 X 13	Alum	3	Black Max	-	78114A45
16 X 13	Alum	3	Black Max Pontoon	-	78114CP1
16 X 12	Alum	3	Black Max	-	16436A45
16 X 12	Alum	3	Black Max Pontoon	-	16436CP1
16 X 11	Alum	3	Black Max	-	78112A45
14 x 23	Alum	4	SpitFire	-	8M0084497
14 x 21	Alum	4	SpitFire	-	8M0084496
14 x 19	Alum	4	SpitFire	-	8M0084495
14 x 17	Alum	4	SpitFire	-	8M0084494
14 x 14	Alum	4	SpitFire	-	8M0084493
14 x 12	Alum	4	SpitFire	-	8M0084491
13 3/4 X 21	SS	3	Vengeance	-	16318A46
14 X 19	SS	3	Vengeance	-	16316A46
14 1/2 X 17	SS	3	Vengeance	-	16314A46
14 1/2 X 15	SS	3	Vengeance	-	16312A46

Dia X Ptch	Matl	Blades	Model	LH	RH
14 3/8 X 27	SS	3	Mirage Plus	18281A46	18280A46
14 1/2 X 25	SS	3	Mirage Plus	13707A46	13706A46
14 5/8 X 23	SS	3	Mirage Plus	13705A46	13704A46
14 3/4 X 21	SS	3	Mirage Plus	13703A46	13702A46
15 1/4 X 19	SS	3	Mirage Plus	13701A46	13700A46
15 3/8 X 18	SS	3	Mirage Plus	889619A46	889620A46
15 1/2 X 17	SS	3	Mirage Plus	90159A46	18278A46
15 3/4 X 15	SS	3	Mirage Plus	19841A46	19838A46
16 X 13	SS	3	Mirage Plus	-	826072A46
14 5/8 X 27	SS	3	Tempest Plus	-	825868A47
14 5/8 X 26	SS	3	Tempest Plus	-	825874A47
14 5/8 X 25	SS	3	Tempest Plus	-	825866A47
14 5/8 X 24	SS	3	Tempest Plus	-	825872A47
14 5/8 X 23	SS	3	Tempest Plus	-	825864A47
14 5/8 X 22	SS	3	Tempest Plus	-	8M8026820
14 5/8 X 21	SS	3	Tempest Plus	-	825862A47
14 5/8 X 19	SS	3	Tempest Plus	-	825860A47
14 5/8 X 17	SS	3	Tempest Plus	-	8M8026790
13 3/4 X 27	SS	4	Trophy Plus	-	8M8026830
13 3/4 X 26	SS	4	Trophy Plus	-	825944A47
13 3/4 X 25	SS	4	Trophy Plus	-	825942A47
13 3/4 X 24	SS	4	Trophy Plus	-	825940A48
13 3/4 X 23	SS	4	Trophy Plus	-	825938A47
13 3/4 X 21	SS	4	Trophy Plus	-	825934A47
13 3/4 X 19	SS	4	Trophy Plus	-	825932A46
13 3/4 X 17	SS	4	Trophy Plus	-	825930A46
13 1/4 X 25	SS	5	HighFive	-	816374A46
13 1/4 X 23	SS	5	HighFive	-	815762A46
13 1/4 X 21	SS	5	HighFive	-	815760A46
13 1/4 X 19	SS	5	HighFive	-	815758A46
13 1/2 X 17	SS	5	HighFive	-	821154A46
14 5/8 X 25	SS	4	Revolution 4	857033A46	857032A46
14 5/8 X 23	SS	4	Revolution 4	857031A46	857030A46
14 5/8 X 21	SS	4	Revolution 4	857029A46	857028A46
14 5/8 X 20	SS	4	Revolution 4	8M0070051	8M0070052
14 5/8 X 19	SS	4	Revolution 4	857027A46	857026A46
14 5/8 X 17	SS	4	Revolution 4	857025A46	857024A46
14 5/8 X 15	SS	4	Revolution 4	8M0064449	857022A46
15 1/4 X 36	SS	3	Bravo I	832123A55	832124A55
15 1/4 X 34	SS	3	Bravo I	832121A55	832122A55
15 1/4 X 32	SS	3	Bravo I	831919A55	831920A55
15 1/4 X 30	SS	3	Bravo I	831917A55	831918A55
15 1/4 X 28	SS	3	Bravo I	831915A55	831916A55
15 1/4 X 26	SS	3	Bravo I	831913A55	831914A55
15 1/4 X 24	SS	3	Bravo I	831911A55	831912A55
15 1/4 X 22	SS	3	Bravo I	831909A55	831910A55
13.5 x 22	SS	3	Enertia	-	899202A46
13.6 x 21	SS	3	Enertia	899003A46	899002A46
13.8 x 20	SS	3	Enertia	-	899000A46
14 x 19	SS	3	Enertia	898999A46	898998A46
14.2 x 18	SS	3	Enertia	-	898996A46
14.5 x 17	SS	3	Enertia	898995A46	898994A46
14.7 x 16	SS	3	Enertia	-	898992A46
15 x 15	SS	3	Enertia	898991A46	898990A46
15.3 x 14	SS	3	Enertia	8M0079504	898988A46
15.6 x 13	SS	3	Enertia	8M0070076	8M0070074
16 x 11	SS	3	Enertia	8M0070077	8M0070079
14 X 24	SS	3	Fury	-	8M8023120
14 X 25	SS	3	Fury	-	8M8023140
14 X 26	SS	3	Fury	-	8M8023160
14 X 27	SS	3	Fury	-	8M8023180
14.5 x 26	SS	4	Fury 4	-	8M0114410
14.5 x 25	SS	4	Fury 4	-	8M0114409
14.5 x 24	SS	4	Fury 4	-	8M0114408
16 x 23	SS	3	Enertia ECO	8M0040405	8M0040404
16 x 22	SS	3	Enertia ECO	8M0040409	8M0040408
16 x 21	SS	3	Enertia ECO	8M0040403	8M0040402
16 x 20	SS	3	Enertia ECO	8M0040407	8M0040406
16 x 19	SS	3	Enertia ECO	8M0040401	8M0040400
16 x 18	SS	3	Enertia ECO	8M0040397	8M0040396
16 x 17	SS	3	Enertia ECO	8M0040399	8M0040398

PROPELLER MATERIAL AND BLADE FACTS

METAL OPTIONS

- Mercury makes propellers out of aluminum and stainless steel.
- Aluminum propellers are inexpensive and suitable for general purpose boating. Mercury uses Mercalloy aluminum that provides superior strength and thinner blades for top performance.
- Stainless steel is favored by boaters who are more conscious about performance and durability. Stainless propellers offer substantially better hole shot and top speed in comparison to an aluminum propeller. In terms of durability, stainless steel props will withstand impacts that would destroy an aluminum propeller. Over the long run, one stainless propeller will last as long as multiple aluminum propellers
- Mercury's legendary X7 stainless steel alloy provides incredible strength that allows propeller designs that would be impossible with other alloys. X7 is featured on Mercury's Enertia and Fury line of propellers.
- Many boaters have questions about whether or not a stainless steel propeller can cause lower unit damage in the event of hitting an underwater obstruction. With Mercury's Flo-Torq II hub system, the hub is designed to sacrifice its drive sleeve well below the failure threshold of modern drive units. This assures protection for your drive no matter what kind of propeller material you run.

PROPELLER SHAFT TORQUE AT UNDERWATER IMPACT

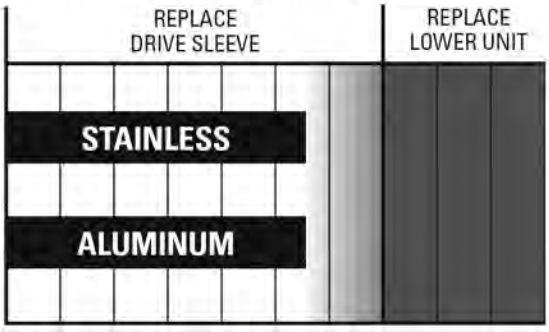

BLADE CONFIGURATIONS



- For most boats, a three blade propeller provides a good blend of smoothness, acceleration, handling and top speed.



- Four-plus blade propellers typically provide the following advantages vs. three blade propellers:
  - o Plane the boat faster
  - o Keep the boat on plane at lower speed
  - o Less likely to ventilate in sharp turns
  - o Better holding power in rough conditions
- In high-performance applications at high drive heights, a four blade propeller may be a better all around choice than a three blade, simply because you are getting more blade area in the water for better control, handling and bow lift.



- Five blade propellers (like Mercury's HighFive propeller) provide superior rough water holding and strong acceleration for tow sports. However the HighFive does not reach the same top speeds as other three and four blade props in our line- up.

SPARE PROPELLERS

- It's always a good idea to keep a spare prop aboard for safety. One way to get the most use out of your spare is to buy a spare that is 2 inches lower in pitch than your regular prop, and use this prop as a water sports propeller. The improved tow sports performance will have a significant impact on your acceleration while pulling a tube, skier or wakeboarder. Remember to change back to your regular prop when it is time for normal usage.

If you still have questions about what propeller is right for you, consult your local Mercury dealer.

Or visit our industry-leading prop selector at: MercuryMarine.com

FLO-TORQ HUB SYSTEM SELECTOR

Selecting the Flo-Torq Hub System that is Right for You

Mercury Propellers has a complete lineup of Flo-Torq hub options to provide the best boating experience for you. Please read the below information regarding the various Flo-Torq options available.

- **Flo-Torq II – Often imitated, never replicated**
  - The Flo-Torq II is the world's first modular hub system for outboards a sterndrives
  - The Flo-Torq II is field serviceable. Loosen the propeller nut, pull off the propeller and replace the drive sleeve. No need to miss time on the water waiting for rubber hub replacement work

- **Flo-Torq Reflex – 75% Stronger than traditional rubber hubs**
  - The Flo-Torq Reflex's innovative design relies on the flexible Reflex fingers - constructed of Noryl GTX. The fingers are designed to flex up to eight degrees, quieting rattle and vibration
  - The Flo-Torq Reflex is field serviceable
  - The Flo-Torq Reflex comes standard with all aluminum and stainless propellers within the 25-30 hp CT and 40-60 hp outboard applications

- **Flo-Torq III and Flo-Torq IV – Rattle and vibration absorption in one**
  - The Flo-Torq III and IV have a 2 piece engineered polymer sleeve
  - The 2 pieces are coupled by titanium springs that allow the hub system flex, thus absorbing the root cause of clutch rattle when using a stainless steel propeller
  - The Flo-Torq III and IV are not required for use with aluminum propellers
  - Refer to the quick reference chart below to understand applications where the Flo-Torq III and IV may be beneficial to you

Stainless steel propeller Flo-Torq hub application chart:

Engine Class / Gearcase Size	*Flo-Torq Recommendation by pitch*
25-30 hp CT and 40-60 hp Outboards / 3.25"	*Flo-Torq Reflex*
40-60 hp CT and 75-115 hp Outboards / 4.25"	*Flo-Torq III* / *Flo-Torq II*
90-115 hp CT and 150+ hp Outboards / 4.75"	*Flo-Torq IV* / *Flo-Torq II*
MerCruiser Alpha, Bravo I Drives / 4.75"	*Flo-Torq II*

9 10 11 12 13 14 15 16 17 18 19 21 22 23 24 25 27
Propeller Pitch

Flo-Tora II



Flo-Tora III / IV



Flo-Tora Reflex



PROPELLER SELECTING TOOLS

Mercury Propeller Selecting Tools Available:

1. Mercury Propeller Selector on mercurymarine.com

a. Follow the required steps. Choose the boat type, engine and detailed boat information (Length, Weight or Current Performance) to identify an estimated pitch and propeller offering

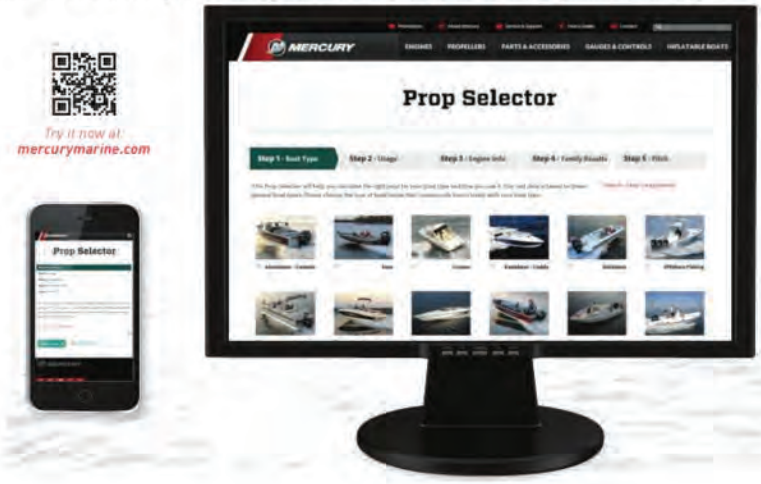

2. Mercury Outboard Propeller Rigging Charts

a. Choose an engine and boat type combination from the following charts.
b. Identify the line with the customer's boat weight (with engine, fuel, people and gear) and approximate speed. This will result in a propeller and pitch recommendation for the application
c. Not all propellers are shown helping identify the best performing propellers for the specific application
d. Only current Mercury outboards are shown, refer to the application charts for additional engine offerings

Example Rigging Chart:

Verado 250 HP and 250 HP Pro FourStroke - Freshwater Fish / Runabout / Fish and Ski

Engine RPM Range: 5800-6400 Gearcase Ratio: 1.85:1

Diameter	Pitch	No. of Blades	Boat Weight	Boat Speed	RH - Part Number	Description	Performance Category
14.62"	25	4	2500-2800	69-78	48-857032A46	Revolution 4	Comp Series
14.62"	23	4	2700-3100	63-71	48-857030A46	Revolution 4	Comp Series
14.62"	21	4	3100-3500	57-64	48-857028A46	Revolution 4	Comp Series
14.62"	20	4	3250-3750	54-61	48-8M0070052	Revolution 4	Comp Series
14.62"	19	4	3400-4000	51-58	48-857026A46	Revolution 4	Comp Series
14.62"	17	4	3900-5000	39-49	48-857024A46	Revolution 4	Comp Series
14.62"	15	4	4600-6000	35-45	48-857022A46	Revolution 4	Comp Series
13.45"	22	3	2900-3300	60-68	48-899202A46	Enertia	Comp Series
13.63"	21	3	3100-3500	57-64	48-899002A46	Enertia	Comp Series
13.80"	20	3	3250-3750	54-61	48-899000A46	Enertia	Comp Series
14.00"	19	3	3400-4000	51-58	48-898998A46	Enertia	Comp Series
14.22"	18	3	3650-4500	45-54	48-898996A46	Enertia	Comp Series
14.45"	17	3	3900-5000	39-49	48-898994A46	Enertia	Comp Series
14.72"	16	3	4300-5500	37-47	48-898992A46	Enertia	Comp Series
15.00"	15	3	4600-6000	35-45	48-898990A46	Enertia	Comp Series
14.62"	23	3	2700-3100	63-71	48-825864A47	Tempest Plus	Elite Series
14.62"	23	3	2700-3100	63-71	48-8M8026820	Tempest Plus	Elite Series
14.62"	21	3	3100-3500	57-64	48-825862A47	Tempest Plus	Elite Series
14.62"	19	3	3400-4000	51-58	48-825860A47	Tempest Plus	Elite Series
14.62"	17	3	3900-5000	39-49	48-8M8025790	Tempest Plus	Elite Series

MERCURY PROPELLER RIGGING CHART

FRESHWATER FISH / RUNABOUT / FISH AND SKI / MOD V / V BOTTOM: 60 - 350 HP

Verado 350 HP - Freshwater Fish / Runabout / Fish and Ski

Engine RPM Range: 5800-6400 Gearcase Ratio: 1.75:1

Diameter	Pitch	No. of Blades	Boat Weight	Boat Speed	RH Part Number	Description	Performance Category
13.45"	22	3	3900-4500	62-70	48-899202A46	Enertia	Comp Series
13.63"	21	3	4200-4700	59-66	48-899002A46	Enertia	Comp Series
13.80"	20	3	4400-5000	56-63	48-899000A46	Enertia	Comp Series
14.00"	19	3	4600-5300	53-60	48-898998A46	Enertia	Comp Series
14.22"	18	3	5000-5700	50-56	48-898996A46	Enertia	Comp Series
14.45"	17	3	5300-6300	46-53	48-898994A46	Enertia	Comp Series
14.72"	16	3	5700-6700	43-50	48-898992A46	Enertia	Comp Series
16.00"	23	3	3700-4200	65-74	48-8M0040404	Enertia ECO	Comp Series
16.00"	22	3	3900-4500	63-70	48-8M0040408	Enertia ECO	Comp Series
16.00"	21	3	4200-4700	59-66	48-8M0040402	Enertia ECO	Comp Series
16.00"	20	3	4400-5000	56-63	48-8M0040406	Enertia ECO	Comp Series
16.00"	19	3	4600-5300	53-60	48-8M0040400	Enertia ECO	Comp Series
16.00"	18	3	4900-5800	49-55	48-8M0040396	Enertia ECO	Comp Series
16.00"	17	3	5300-6300	46-53	48-8M0040398	Enertia ECO	Comp Series
14.62"	25	4	3300-3800	71-81	48-857032A46	Revolution 4	Comp Series
14.62"	23	4	3700-4200	65-74	48-857030A46	Revolution 4	Comp Series
14.62"	21	4	4200-4700	59-66	48-857028A46	Revolution 4	Comp Series
14.62"	20	4	4400-5000	56-63	48-8M0070052	Revolution 4	Comp Series
14.62"	19	4	4600-5300	53-60	48-857026A46	Revolution 4	Comp Series
14.62"	17	4	5300-6300	46-53	48-857024A46	Revolution 4	Comp Series
14.62"	15	4	6300-7500	39-46	48-857022A46	Revolution 4	Comp Series
14.62"	23	3	3700-4200	65-74	48-825864A47	Tempest Plus	Elite Series
14.62"	22	3	3900-4500	62-70	48-8M8026820	Tempest Plus	Elite Series
14.62"	21	3	4200-4700	59-66	48-825862A47	Tempest Plus	Elite Series
14.62"	19	3	4600-5300	53-60	48-825860A47	Tempest Plus	Elite Series

Verado 300 HP and 300 HP Pro FourStroke - Freshwater Fish / Runabout / Fish and Ski

Engine RPM Range: 5800-6400 Gearcase Ratio: 1.75:1 and 1.85:1

Diameter	Pitch	No. of Blades	Boat Weight	Boat Speed	RH - Part Number	Description	Performance Category
14.62"	25	4	2800-3300	71-81	48-857032A46	Revolution 4	Comp Series
14.62"	23	4	3100-3600	65-74	48-857030A46	Revolution 4	Comp Series
14.62"	21	4	3600-4100	59-66	48-857028A46	Revolution 4	Comp Series
14.62"	20	4	3800-4300	56-63	48-8M0070052	Revolution 4	Comp Series
14.62"	19	4	4000-4600	53-60	48-857026A46	Revolution 4	Comp Series
14.62"	17	4	4600-5400	46-53	48-857024A46	Revolution 4	Comp Series
14.62"	15	4	5400-6500	39-46	48-857022A46	Revolution 4	Comp Series
13.45"	22	3	3300-3800	62-70	48-899202A46	Enertia	Comp Series
13.63"	21	3	3600-4100	59-66	48-899002A46	Enertia	Comp Series
13.80"	20	3	3800-4300	56-63	48-899000A46	Enertia	Comp Series
14.00"	19	3	4000-4600	53-60	48-898998A46	Enertia	Comp Series
14.22"	18	3	4300-4900	50-56	48-898996A46	Enertia	Comp Series
14.45"	17	3	4600-5400	46-53	48-898994A46	Enertia	Comp Series
14.72"	16	3	4900-5800	43-50	48-898992A46	Enertia	Comp Series
15.00"	15	3	5400-6500	39-46	48-898990A46	Enertia	Comp Series
14.62"	23	3	3100-3600	65-74	48-825864A47	Tempest Plus	Elite Series
14.62"	22	3	3300-3800	62-70	48-8M8026820	Tempest Plus	Elite Series

MERCURY PROPELLER RIGGING CHART

Diameter	Pitch	No. of Blades	Boat Weight	Boat Speed	RH - Part Number	Description	Performance Category
14.62"	21	3	3600-4100	59-66	48-825862A47	Tempest Plus	Elite Series
14.62"	19	3	4000-4600	53-60	48-825860A47	Tempest Plus	Elite Series
14.62"	17	3	4600-5400	46-53	48-8M8026790	Tempest Plus	Elite Series

Verado 250 HP and 250 HP Pro FourStroke - Freshwater Fish / Runabout / Fish and Ski

Engine RPM Range: 5800-6400 Gearcase Ratio: 1.85:1

Diameter	Pitch	No. of Blades	Boat Weight	Boat Speed	RH - Part Number	Description	Performance Category
14.62"	25	4	2500-2800	69-78	48-857032A46	Revolution 4	Comp Series
14.62"	23	4	2700-3100	63-71	48-857030A46	Revolution 4	Comp Series
14.62"	21	4	3100-3500	57-64	48-857028A46	Revolution 4	Comp Series
14.62"	20	4	3250-3750	54-61	48-8M0070052	Revolution 4	Comp Series
14.62"	19	4	3400-4000	51-58	48-857026A46	Revolution 4	Comp Series
14.62"	17	4	3900-5000	39-49	48-857024A46	Revolution 4	Comp Series
14.62"	15	4	4600-6000	35-45	48-857022A46	Revolution 4	Comp Series
13.45"	22	3	2900-3300	60-68	48-899202A46	Enertia	Comp Series
13.63"	21	3	3100-3500	57-64	48-899002A46	Enertia	Comp Series
13.80"	20	3	3250-3750	54-61	48-899000A46	Enertia	Comp Series
14.00"	19	3	3400-4000	51-58	48-898998A46	Enertia	Comp Series
14.22"	18	3	3650-4500	45-54	48-898996A46	Enertia	Comp Series
14.45"	17	3	3900-5000	39-49	48-898994A46	Enertia	Comp Series
14.72"	16	3	4300-5500	37-47	48-898992A46	Enertia	Comp Series
15.00"	15	3	4600-6000	35-45	48-898990A46	Enertia	Comp Series
14.62"	23	3	2700-3100	63-71	48-825864A47	Tempest Plus	Elite Series
14.62"	23	3	2700-3100	63-71	48-8M8026820	Tempest Plus	Elite Series
14.62"	21	3	3100-3500	57-64	48-825862A47	Tempest Plus	Elite Series
14.62"	19	3	3400-4000	51-58	48-825860A47	Tempest Plus	Elite Series
14.62"	17	3	3900-5000	39-49	48-8M8026790	Tempest Plus	Elite Series

Verado 225 HP and 225 HP Pro FourStroke - Freshwater Fish / Runabout / Fish and Ski

Engine RPM Range: 5800-6400 Gearcase Ratio: 1.85:1

Diameter	Pitch	No. of Blades	Boat Weight	Boat Speed	RH - Part Number	Description	Performance Category
14.62"	25	4	2200-2500	69-78	48-857032A46	Revolution 4	Comp Series
14.62"	23	4	2500-2800	63-71	48-857030A46	Revolution 4	Comp Series
14.62"	21	4	2800-3200	57-64	48-857028A46	Revolution 4	Comp Series
14.62"	20	4	2950-3400	54-61	48-8M0070052	Revolution 4	Comp Series
14.62"	19	4	3100-3600	51-58	48-857026A46	Revolution 4	Comp Series
14.62"	17	4	3500-4100	45-52	48-857024A46	Revolution 4	Comp Series
14.62"	15	4	4100-5500	35-45	48-857022A46	Revolution 4	Comp Series
13.45"	22	3	2700-3100	60-68	48-899202A46	Enertia	Comp Series
13.63"	21	3	2800-3200	57-64	48-899002A46	Enertia	Comp Series
13.80"	20	3	2950-3400	54-61	48-899000A46	Enertia	Comp Series
14.00"	19	3	3100-3600	51-58	48-898998A46	Enertia	Comp Series
14.22"	18	3	3300-3850	48-55	48-898996A46	Enertia	Comp Series
14.45"	17	3	3500-4100	45-52	48-898994A46	Enertia	Comp Series
14.72"	16	3	3800-4800	40-49	48-898992A46	Enertia	Comp Series
15.00"	15	3	4100-5500	35-45	48-898990A46	Enertia	Comp Series
14.62"	23	3	2500-2800	63-71	48-825864A47	Tempest Plus	Elite Series
14.62"	22	3	2700-3100	60-68	48-8M8026820	Tempest Plus	Elite Series
14.62"	21	3	2800-3200	57-64	48-825862A47	Tempest Plus	Elite Series
14.62"	19	3	3100-3600	51-58	48-825860A47	Tempest Plus	Elite Series
14.62"	17	3	3500-4100	45-52	48-8M8026790	Tempest Plus	Elite Series

Pro FourStroke 200 HP - V6 - Freshwater Fish / Runabout / Fish and Ski

Engine RPM Range: 5800 - 6400 Gearcase Ratio 1.85:1

Diameter	Pitch	No. of Blades	Boat Weight	Boat Speed	RH - Part Number	Description	Performance Category
13.5"	22	3	2300-2600	59-68	48-899202A46	Enertia	Comp Series
13.6"	21	3	2500-2800	57-64	48-899002A46	Enertia	Comp Series
13.8"	20	3	2750-2950	54-63	48-899000A46	Enertia	Comp Series
14"	19	3	2800-3200	51-58	48-898998A46	Enertia	Comp Series
14.2"	18	3	2950-3450	47-55	48-898996A46	Enertia	Comp Series
14.5"	17	3	3100-3700	45-52	48-898994A46	Enertia	Comp Series
14.7"	16	3	3350-4250	41-50	48-898992A46	Enertia	Comp Series
15"	15	3	3600-4400	38-47	48-898990A46	Enertia	Comp Series
14.62"	23	3	2200-2500	63-71	48-825864A47	Tempest Plus	Elite Series
14.62"	21	3	2500-2800	57-64	48-825862A47	Tempest Plus	Elite Series
14.62"	19	3	2800-3200	51-58	48-825860A47	Tempest Plus	Elite Series
14.62"	17	3	3000-3500	45-52	48-8M8026790	Tempest Plus	Elite Series
14.0"	23	3	2200-2500	63-71	48-8M0084497	SpitFire	Elite Series
14.0"	21	3	2500-2800	57-64	48-8M0084496	SpitFire	Elite Series
14.0"	19	3	2800-3200	51-58	48-8M0084495	SpitFire	Elite Series
14.0"	17	3	2200-2500	63-71	48-8M0084494	SpitFire	Elite Series
14.25"	21	3	2500-2800	57-64	48-832832A45	Black Max	Sport Series
14.5"	19	3	2800-3200	51-58	48-832830A45	Black Max	Sport Series
15.0"	17	3	2500-2800	45-52	48-832828A45	Black Max	Sport Series

Verado 200 HP – 4Cyl - Freshwater Fish / Runabout / Fish and Ski

Engine RPM Range: 5800-6400 Gearcase Ratio: 2.08:1

Diameter	Pitch	No. of Blades	Boat Weight	Boat Speed	RH - Part Number	Description	Performance Category
13.45"	22	3	2800-3200	51-58	48-899202A46	Enertia	Comp Series
13.63"	21	3	2900-3300	49-55	48-899002A46	Enertia	Comp Series
13.80"	20	3	3000-3600	46-53	48-899000A46	Enertia	Comp Series
14.00"	19	3	3300-3900	43-50	48-898998A46	Enertia	Comp Series
14.22"	18	3	3500-4300	39-47	48-898996A46	Enertia	Comp Series
14.45"	17	3	3800-4700	36-44	48-898994A46	Enertia	Comp Series
14.72"	16	3	4100-5200	33-41	48-898992A46	Enertia	Comp Series
15.00"	15	3	4400-6000	29-38	48-898990A46	Enertia	Comp Series
14.62"	21	3	2900-3300	49-55	48-825862A47	Tempest Plus	Elite Series
14.62"	19	3	3300-3900	43-50	48-825860A47	Tempest Plus	Elite Series
14.62"	17	3	3800-4700	36-44	48-8M8026790	Tempest Plus	Elite Series
14.00"	21	3	2900-3300	49-55	48-8M0084496	SpitFire	Elite Series
14.00"	19	3	3300-3900	43-50	48-8M0084495	SpitFire	Elite Series
14.00"	17	3	3800-4700	36-44	48-8M0084494	SpitFire	Elite Series
14.25"	21	3	2900-3300	49-55	48-832832A45	Black Max	Sport Series
14.50"	19	3	3300-3900	43-50	48-832830A45	Black Max	Sport Series
15.00"	17	3	3800-4700	36-44	48-832828A45	Black Max	Sport Series
15.25"	15	3	4400-6000	29-38	48- 78116A45	Black Max	Sport Series

150 HP FourStroke - Freshwater Fish / Runabout / Fish and Ski

Engine RPM Range: 5000-5800 Gearcase Ratio: 1.92:1

Diameter	Pitch	No. of Blades	Boat Weight	Boat Speed	RH - Part Number	Description	LH - Part Number	Performance Category
13.50"	22	3	2100-2600	47-57	48-899202A46	Enertia		Comp Series
13.62"	21	3	2200-2800	44-54	48-899002A46	Enertia	48-899003A46	Comp Series
13.75"	20	3	2300-3000	42-52	48-899000A46	Enertia		Comp Series
14.00"	19	3	2500-3200	39-49	48-898998A46	Enertia	48-898999A46	Comp Series
14.25"	18	3	2700-3200	35-46	48-898996A46	Enertia		Comp Series

MERCURY PROPELLER RIGGING CHART

Diameter	Pitch	No. of Blades	Boat Weight	Boat Speed	RH - Part Number	Description	LH - Part Number	Performance Category
14.50"	17	3	2900-4000	32-43	48-898994A46	Enertia	48-898995A46	Comp Series
14.75"	16	3	3100-4500	29-40	48-898992A46	Enertia		Comp Series
15.00"	15	3	3400-5100	26-37	48-898990A46	Enertia	48-898991A46	Comp Series
15.13"	14	3	3800-6200	22-34	48-898988A46	Enertia		Comp Series
14.62"	25	3	1800-2200	55-65	48-825866A47	Tempest Plus		Elite Series
14.62"	24	3	1900-2300	53-62	48-825872A47	Tempest Plus		Elite Series
14.62"	23	3	2000-2400	50-60	48-825864A47	Tempest Plus		Elite Series
14.62"	22	3	2100-2600	47-57	48-8M8026820	Tempest Plus		Elite Series
14.62"	21	3	2200-2800	44-54	48-825862A47	Tempest Plus		Elite Series
14.62"	19	3	2500-3200	39-49	48-825860A47	Tempest Plus		Elite Series
14.62"	17	3	2900-4000	32-43	48-8M8026790	Tempest Plus		Elite Series

115 CT HP FourStroke - Freshwater Fish / Runabout / Fish and Ski

Engine RPM Range: 5000-6000 Gearcase Ratio: 2.38:1

Diameter	Pitch	No. of Blades	Boat Weight	Boat Speed	RH - Part Number	Description	LH - Part Number	Performance Category
13.50"	22	3	2000-2800	35-47	48-899202A46	Enertia		Comp Series
13.80"	21	3	2100-3100	32-45	48-899002A46	Enertia	48-899003A46	Comp Series
13.75"	20	3	2300-3500	29-42	48-899000A46	Enertia		Comp Series
14.00"	19	3	2400-3700	27-40	48-898998A46	Enertia	48-898999A46	Comp Series
14.20"	18	3	2600-4300	24-37	48-898996A46	Enertia		Comp Series
14.50"	17	3	2800-5000	21-35	48-898994A46	Enertia	48-898995A46	Comp Series
14.70"	16	3	3100-5600	19-32	48-898992A46	Enertia		Comp Series
15.00"	15	3	3500-6700	16-29	48-898990A46	Enertia	48-898991A46	Comp Series
15.30"	14	3	3900-7800	14-26	48-898988A46	Enertia	48-8M0079504	Comp Series
15.60"	13	3	4300-10300	11-24	48-8M0070074	Enertia	48-8M0070076	Comp Series
16.00"	11	3	7000+	1-18	48-8M0070079	Enertia	48-8M0070077	Comp Series
14.62"	23	3	1900-2600	38-49	48-825864A47	Tempest Plus		Elite Series
14.62"	22	3	2000-2800	35-47	48-8M8026820	Tempest Plus		Elite Series
14.62"	21	3	2100-3100	32-45	48-825862A47	Tempest Plus		Elite Series
14.62"	19	3	2400-3700	27-40	48-825860A47	Tempest Plus		Elite Series
14.62"	17	3	2800-5000	21-35	48-8M8026790	Tempest Plus		Elite Series
14.00"	23	4	1900-2600	38-49	48-8M0084497	SpitFire		Elite Series
14.00"	21	4	2100-3100	32-45	48-8M0084496	SpitFire		Elite Series
14.00"	19	4	2400-3700	27-40	48-8M0084495	SpitFire		Elite Series
14.00"	17	4	2800-5000	21-35	48-8M0084494	SpitFire		Elite Series
14.00"	14	4	3900-7800	14-26	48-8M0084493	SpitFire		Elite Series
14.00"	12	4	7000+	1-24	48-8M0084491	SpitFire		Elite Series
14.50"	19	3	2400-3700	27-40	48-832830A45	Black Max		Sport Series
15.00"	17	3	2800-5000	21-35	48-832828A45	Black Max		Sport Series
15.25"	15	3	3500-6700	16-29	48- 78116A45	Black Max		Sport Series
16.00"	13	3	4300-10300	11-24	48- 78114A45	Black Max		Sport Series
16.00"	12	3	5000+	9-21	48- 16436A45	Black Max		Sport Series
16.00"	11	3	7000+	1-18	48- 78112A45	Black Max	48- 78117A40	Sport Series

115 STD HP FourStroke - Freshwater Fish / Runabout / Fish and Ski

Engine RPM Range: 5000-6000 Gearcase Ratio: 2.07:1

Diameter	Pitch	No. of Blades	Boat Weight	Boat Speed	RH - Part Number	Description	Performance Category
12.7"	21	4	1800-2400	40-52	48-8M0055551	SpitFire X7	Elite Series
12.7"	19	4	2000-2900	34-47	48-8M0055550	SpitFire X7	Elite Series
13.0"	17	4	2300-3600	28-41	48-8M0055549	SpitFire X7	Elite Series
13.5"	15	4	2800-4700	22-35	48-8M0055548	SpitFire X7	Elite Series
14.0"	13	4	3500-6700	16-29	48-8M0055547	SpitFire X7	Elite Series

Diameter	Pitch	No. of Blades	Boat Weight	Boat Speed	RH - Part Number	Description	Performance Category
13"	18	3	2200-3200	31-44	48- 16988A46	Vengeance	Sport Series
13.13"	16	3	2500-4100	25-38	48- 16986A46	Vengeance	Sport Series
13.25"	15	3	2800-4700	22-35	48-854354A46	Vengeance	Sport Series
13.38"	14	3	3100-5600	19-32	48- 17314A46	Vengeance	Sport Series
14"	12	3	3900-8500	13-26	48- 17312A46	Vengeance	Sport Series
12.8"	19	4	2000-2900	34-47	48-8M8026600	SpitFire	Elite Series
12.8"	17	4	2300-3600	28-41	48-8M8026590	SpitFire	Elite Series
12.8"	15	4	2800-4700	22-35	48-8M8026580	SpitFire	Elite Series
13.8"	13	4	3500-6700	16-29	48-8M8026570	SpitFire	Elite Series
13.8"	11	4	4500-11500	10-23	48-8M8026560	SpitFire	Elite Series
12.5"	23	3	1600-2100	45-57	48- 77350A45	Black Max	Sport Series
12.75"	21	3	1800-2400	40-52	48- 77348A45	Black Max	Sport Series
13"	19	3	2000-2900	34-47	48- 77346A45	Black Max	Sport Series
13.25"	17	3	2300-3600	28-41	48- 77344A45	Black Max	Sport Series
13.25"	16	3	2500-4100	25-38	48-854360A45	Black Max	Sport Series
13.75"	15	3	2800-4700	22-35	48- 77342A45	Black Max	Sport Series
13.88"	14	3	3100-5600	19-32	48-854352A45	Black Max	Sport Series
14"	13	3	3500-6700	16-29	48- 77340A45	Black Max	Sport Series
14"	11	3	4700+	1-23	48- 77338A45	Black Max	Sport Series

90 CT HP FourStroke - Freshwater Fish / Runabout / Fish and Ski

Engine RPM Range: 5000-6000 Gearcase Ratio: 2.38:1

Diameter	Pitch	No. of Blades	Boat Weight	Boat Speed	RH - Part Number	Description	LH - Part Number	Performance Category
13.80"	21	3	1600-2400	32-45	48-899002A46	Enertia	48-899003A46	Comp Series
13.75"	20	3	1800-2700	29-42	48-899000A46	Enertia		Comp Series
14.00"	19	3	1900-2900	27-40	48-898998A46	Enertia	48-898999A46	Comp Series
14.20"	18	3	2100-3300	24-37	48-898996A46	Enertia		Comp Series
14.50"	17	3	2200-3900	21-35	48-898994A46	Enertia	48-898995A46	Comp Series
14.70"	16	3	2400-4400	19-32	48-898992A46	Enertia		Comp Series
15.00"	15	3	2700-5300	16-29	48-898990A46	Enertia	48-898991A46	Comp Series
15.30"	14	3	3100-6100	14-26	48-898988A46	Enertia	48-8M0079504	Comp Series
15.6"	13	3	3300-8100	11-24	48-8M0070074	Enertia	48-8M0070076	Comp Series
16.0"	11	3	6000+	1-18	48-8M0070079	Enertia	48-8M0070077	Comp Series
13.75"	21	3	1600-2400	32-45	48- 16318A46	Vengeance	48- 16319A46	Sport Series
14.00"	19	3	1900-2900	27-40	48- 16316A46	Vengeance	48- 16317A46	Sport Series
14.50"	17	3	2200-3900	21-35	48- 16314A46	Vengeance	48- 16315A46	Sport Series
14.00"	21	4	1600-2400	32-45	48-8M0084496	SpitFire		Elite Series
14.00"	19	4	1900-2900	27-40	48-8M0084495	SpitFire		Elite Series
14.00"	17	4	2200-3900	21-35	48-8M0084494	SpitFire		Elite Series
14.00"	14	4	3300-8100	11-24	48-8M0084493	SpitFire		Elite Series
14.00"	12	4	6000+	1-18	48-8M0084491	SpitFire		Elite Series
14.00"	23	3	1500-1900	38-49	48-832834A45	Black Max		Sport Series
14.25"	21	3	1600-2400	32-45	48-832832A45	Black Max		Sport Series
14.50"	19	3	1900-2900	27-40	48-832830A45	Black Max		Sport Series
15.00"	17	3	2200-3900	21-35	48-832828A45	Black Max		Sport Series
15.25"	15	3	2700-5300	16-29	48- 78116A45	Black Max		Sport Series
16.00"	13	3	3300-8100	11-24	48- 78114A45	Black Max		Sport Series
16.00"	11	3	6000+	1-18	48- 78112A45	Black Max		Sport Series

MERCURY PROPELLER RIGGING CHART

90 STD HP FourStroke - Freshwater Fish / Runabout / Fish and Ski

Engine RPM Range: 5000-6000 Gearcase Ratio: 2.07:1

Diameter	Pitch	No. of Blades	Boat Weight	Boat Speed	RH - Part Number	Description	Performance Category
12.7"	21	4	1400-1900	40-52	48-8M0055551	SpitFire X7	Elite Series
12.7"	19	4	1600-2300	34-47	48-8M0055550	SpitFire X7	Elite Series
13.0"	17	4	1800-2800	28-41	48-8M0055549	SpitFire X7	Elite Series
13.5"	15	4	2200-3700	22-35	48-8M0055548	SpitFire X7	Elite Series
13"	18	3	4000+	31-44	48- 16988A46	Vengeance	Sport Series
13.13"	16	3	2000-3200	25-38	48- 16986A46	Vengeance	Sport Series
13.25"	15	3	2200-3700	22-35	48-854354A46	Vengeance	Sport Series
13.38"	14	3	2400-4400	19-32	48- 17314A46	Vengeance	Sport Series
14"	12	3	2700-5300	13-26	48- 17312A46	Vengeance	Sport Series
12.8"	19	4	1600-2300	34-47	48-8M8026600	SpitFire	Elite Series
12.8"	17	4	1800-2800	28-41	48-8M8026590	SpitFire	Elite Series
12.8"	15	4	2200-3700	22-35	48-8M8026580	SpitFire	Elite Series
13.8"	13	4	2700-5300	16-29	48-8M8026570	SpitFire	Elite Series
13.8"	11	4	4000+	10-23	48-8M8026560	SpitFire	Elite Series
12.5"	23	3	1300-1600	45-57	48- 77350A45	Black Max	Sport Series
12.75"	21	3	1400-1900	40-52	48- 77348A45	Black Max	Sport Series
13"	19	3	1600-2300	34-47	48- 77346A45	Black Max	Sport Series
13.25"	17	3	1800-2800	28-41	48- 77344A45	Black Max	Sport Series
13.25"	16	3	2000-3200	25-38	48-854360A45	Black Max	Sport Series
13.75"	15	3	2200-3700	22-35	48- 77342A45	Black Max	Sport Series
13.88"	14	3	2400-4400	19-32	48-854352A45	Black Max	Sport Series
14"	13	3	2700-5300	16-29	48- 77340A45	Black Max	Sport Series
14"	11	3	4000+	1-22	48- 77338A45	Black Max	Sport Series

75 STD HP FourStroke - Freshwater Fish (V and Mod V)

Engine RPM Range: 5000-6000 Gearcase Ratio: 2.07:1

Diameter	Pitch	No. of Blades	Boat Weight	Boat Speed	RH - Part Number	Description	Performance Category
12.7"	21	4	1300-1900	34-47	48-8M0055551	SpitFire X7	Elite Series
12.7"	19	4	1500-2300	29-42	48-8M0055550	SpitFire X7	Elite Series
13.0"	17	4	1700-2900	23-37	48-8M0055549	SpitFire X7	Elite Series
13.5"	15	4	2100-3900	18-31	48-8M0055548	SpitFire X7	Elite Series
13"	18	3	1600-2500	26-40	48- 16988A46	Vengeance	Sport Series
13.13"	16	3	1900-3400	20-34	48- 16986A46	Vengeance	Sport Series
13.25"	15	3	2100-3900	18-31	48-854354A46	Vengeance	Sport Series
13.38"	14	3	2300-4700	15-28	48- 17314A46	Vengeance	Sport Series
14"	12	3	2900-7500	10-23	48- 17312A46	Vengeance	Sport Series
12.8"	19	4	1500-2300	29-42	48-8M8026600	SpitFire	Elite Series
12.8"	17	4	1700-2900	23-37	48-8M8026590	SpitFire	Elite Series
12.8"	15	4	2100-3900	18-31	48-8M8026580	SpitFire	Elite Series
12.5"	23	3	1200-1600	39-52	48- 77350A45	Black Max	Sport Series
12.75"	21	3	1300-1900	34-47	48- 77348A45	Black Max	Sport Series
13"	19	3	1500-2300	29-42	48- 77346A45	Black Max	Sport Series
13.25"	17	3	1700-2900	23-37	48- 77344A45	Black Max	Sport Series
13.25"	16	3	1900-3400	20-34	48-854360A45	Black Max	Sport Series
13.75"	15	3	2100-3900	18-31	48- 77342A45	Black Max	Sport Series
13.88"	14	3	2300-4700	15-28	48-854352A45	Black Max	Sport Series

60 STD HP FourStroke - Freshwater Fish (V and Mod V)

Engine RPM Range: 5500-6000 Gearcase ratio: 2.33:1

Diameter	Pitch	No. of Blades	Boat Weight	Boat Speed	RH - Part Number	Description	Performance Category
10.6	14	4	1300-1700	16-30	48-878616A46	Trophy Sport	Elite Series
10.6	13	4	1500-2000	17-26	48-878614A46	Trophy Sport	Elite Series
10.6	12	4	1700-2500	19-22	48-878612A46	Trophy Sport	Elite Series
10.25	15	3	1200-1600	15-33	48-855862A46	Vengeance	Sport Series
10.4	14	3	1300-1700	16-30	48-855860A46	Vengeance	Sport Series
10.5	13	3	1500-2000	17-26	48-855858A46	Vengeance	Sport Series
10.1	15	4	1200-1600	15-33	48-8M8026640	SpitFire	Elite Series
10.1	14	4	1300-1700	16-30	48-8M8026635	SpitFire	Elite Series
10.3	13	4	1500-2000	17-26	48-8M8026630	SpitFire	Elite Series
10	19	3	900-1000	11-47	48- 73146A45	Black Max	Sport Series
10	17	3	1000-1300	13-40	48- 73144A45	Black Max	Sport Series
10	16	3	1100-1400	14-37	48- 73142A45	Black Max	Sport Series
10.1	15	3	1200-1600	15-33	48- 73140A45	Black Max	Sport Series
10.25	14	3	1300-1700	16-30	48- 73138A45	Black Max	Sport Series
10.4	13	3	1500-2000	17-26	48- 73136A45	Black Max	Sport Series

TRI / PONTOON: 40 - 350 HP

Verado 350 HP - Tri / Pontoon (Single and Twin)

Engine RPM Range: 5800 - 6400 Gearcase Ratio 1.75:1

No. of Engine	Diameter	Pitch	No. of Blades	Boat Weight	Boat Speed	RH Part Number	Description	LH Part Number	Performance Category
Single	13.45"	22	3	3900-4500	62-70	48-899202A46	Enertia		Comp Series
Single	13.63"	21	3	4200-4700	59-66	48-899002A46	Enertia	48-899003A46	Comp Series
Single	13.80"	20	3	4400-5000	56-63	48-899000A46	Enertia		Comp Series
Single	14.00"	19	3	4600-5300	53-60	48-898998A46	Enertia	48-898999A46	Comp Series
Single	14.22"	18	3	5000-5700	50-56	48-898996A46	Enertia		Comp Series
Single	14.45"	17	3	5300-6300	46-53	48-898994A46	Enertia	48-898995A46	Comp Series
Single	14.72"	16	3	5700-6700	43-50	48-898992A46	Enertia		Comp Series
Single	15.00"	15	3	6300-7500	39-46	48-898990A46	Enertia	48-898991A46	Comp Series
Single	15.30"	14	3	6700-8500	35-43	48-898988A46	Enertia	48-8M0079504	Comp Series
Single	15.60"	13	3	7500-9800	31-39	48-8M0070074	Enertia	48-8M0070076	Comp Series
Single	16.00"	23	3	3700-4200	65-74	48-8M0040404	Enertia ECO	48-8M0040405	Comp Series
Single	16.00"	22	3	3900-4500	62-70	48-8M0040408	Enertia ECO	48-8M0040409	Comp Series
Single	16.00"	21	3	4200-4700	59-66	48-8M0040402	Enertia ECO	48-8M0040403	Comp Series
Single	16.00"	20	3	4400-5000	56-63	48-8M0040406	Enertia ECO	48-8M0040407	Comp Series
Single	16.00"	19	3	4600-5300	53-60	48-8M0040400	Enertia ECO	48-8M0040401	Comp Series
Single	16.00"	18	3	5000-5700	50-56	48-8M0040396	Enertia ECO	48-8M0040397	Comp Series
Single	16.00"	17	3	5300-6300	46-53	48-8M0040398	Enertia ECO	48-8M0040399	Comp Series
Single	14.62"	25	4	3300-3800	71-81	48-857032A46	Revolution 4	48-857033A46	Comp Series
Single	14.62"	23	4	3700-4200	65-74	48-857030A46	Revolution 4	48-857031A46	Comp Series
Single	14.62"	21	4	4200-4700	59-66	48-857028A46	Revolution 4	48-857029A46	Comp Series
Single	14.62"	19	4	4600-5300	53-60	48-857026A46	Revolution 4	48-857027A46	Comp Series
Single	14.62"	17	4	5300-6300	46-53	48-857024A46	Revolution 4	48-857025A46	Comp Series
Single	14.62"	15	4	6300-7500	39-46	48-857022A46	Revolution 4	48-8M0064449	Comp Series
Twin	13.63"	21	3	7000-8300	59-66	48-899002A46	Enertia	48-899003A46	Comp Series
Twin	14.00"	19	3	8100-9600	53-60	48-898998A46	Enertia	48-898999A46	Comp Series
Twin	14.45"	17	3	9600-12200	46-53	48-898994A46	Enertia	48-898995A46	Comp Series
Twin	15.00"	15	3	11600-15300	39-46	48-898990A46	Enertia	48-898991A46	Comp Series

MERCURY PROPELLER RIGGING CHART

No. of Engine	Diameter	Pitch	No. of Blades	Boat Weight	Boat Speed	RH Part Number	Description	LH Part Number	Performance Category
Twin	16.00"	23	3	5800-7200	65-74	48-8M0040404	Enertia ECO	48-8M0040405	Comp Series
Twin	16.00"	22	3	3900-4500	62-70	48-8M0040408	Enertia ECO	48-8M0040409	Comp Series
Twin	16.00"	21	3	7000-8300	59-66	48-8M0040402	Enertia ECO	48-8M0040403	Comp Series
Twin	16.00"	20	3	4400-5000	56-63	48-8M0040406	Enertia ECO	48-8M0040407	Comp Series
Twin	16.00"	19	3	8100-9600	53-60	48-8M0040400	Enertia ECO	48-8M0040401	Comp Series
Twin	16.00"	18	3	5000-5700	50-56	48-8M0040396	Enertia ECO	48-8M0040397	Comp Series
Twin	16.00"	17	3	9600-12200	46-53	48-8M0040398	Enertia ECO	48-8M0040399	Comp Series
Twin	14.62"	21	4	7000-8300	59-66	48-857028A46	Revolution 4	48-857029A46	Comp Series
Twin	14.62"	19	4	8100-9600	53-60	48-857026A46	Revolution 4	48-857027A46	Comp Series
Twin	14.62"	17	4	9600-12200	46-53	48-857024A46	Revolution 4	48-857025A46	Comp Series
Twin	14.62"	15	4	11600-15300	39-46	48-857022A46	Revolution 4	48-8M0064449	Comp Series
Twin	14.62"	25	4	5000-6300	71-81	48-857032A46	Revolution 4	48-857033A46	Comp Series
Twin	14.62"	23	4	5800-7200	65-74	48-857030A46	Revolution 4	48-857031A46	Comp Series

Verado 300 HP - Tri / Pontoon

Engine RPM Range: 5800-6400 Gearcase Ratio: 1.75:1 and 1.85:1

Diameter	Pitch	No. of Blades	Boat Weight	Boat Speed	RH - Part Number	Description	LH - Part Number	Performance Category
13.45"	22	3	3300-3800	62-70	48-899202A46	Enertia		Comp Series
13.63"	21	3	3600-4100	59-66	48-899002A46	Enertia	48-899003A46	Comp Series
13.80"	20	3	3800-4300	56-63	48-899000A46	Enertia		Comp Series
14.00"	19	3	4000-4600	53-60	48-898998A46	Enertia	48-898999A46	Comp Series
14.22"	18	3	4300-4900	50-56	48-898996A46	Enertia		Comp Series
14.45"	17	3	4600-5400	46-53	48-898994A46	Enertia	48-898994A46	Comp Series
14.72"	16	3	4900-5800	43-50	48-898992A46	Enertia		Comp Series
15.00"	15	3	5400-6500	39-46	48-898990A46	Enertia	48-898991A46	Comp Series
15.00"	14	3	6700-8500	35-43	48-898988A46	Enertia	48-8M0079504	Comp Series
15.00"	13	3	7500-9800	31-39	48-8M0070077	Enertia	48-8M0070076	Comp Series
16.00"	23	3	3100-3600	65-74	48-8M0040404	Enertia ECO	48-8M0040405	Comp Series
16.00"	22	3	3300-3800	62-70	48-8M0040408	Enertia ECO	48-8M0040409	Comp Series
16.00"	21	3	3600-4100	59-66	48-8M0040402	Enertia ECO	48-8M0040403	Comp Series
16.00"	20	3	3800-4300	56-63	48-8M0040406	Enertia ECO	48-8M0040407	Comp Series
16.00"	19	3	4000-4600	53-60	48-8M0040400	Enertia ECO	48-8M0040401	Comp Series
16.00"	18	3	4300-4900	50-56	48-8M0040396	Enertia ECO	48-8M0040397	Comp Series
16.00"	17	3	4600-5400	46-53	48-8M0040398	Enertia ECO	48-8M0040399	Comp Series
14.62"	25	4	2800-3300	71-81	48-857032A46	Revolution 4	48-857033A46	Comp Series
14.62"	23	4	3100-3600	65-74	48-857030A46	Revolution 4	48-857031A46	Comp Series
14.62"	21	4	3600-4100	59-66	48-857028A46	Revolution 4	48-857029A46	Comp Series
14.62"	20	4	3800-4300	56-63	48-8M0070052	Revolution 4	48-8M0070051	Comp Series
14.62"	19	4	4000-4600	53-60	48-857026A46	Revolution 4	48-857027A46	Comp Series
14.62"	17	4	4600-5400	46-53	48-857024A46	Revolution 4	48-857025A46	Comp Series
14.62"	15	4	5400-6500	39-46	48-857022A46	Revolution 4	48-8M0064449	Comp Series

Verado 250 HP - Tri / Pontoon

Engine RPM Range: 5800-6400 Gearcase Ratio: 1.85:1

Diameter	Pitch	No. of Blades	Boat Weight	Boat Speed	RH - Part Number	Description	LH - Part Number	Performance Category
13.45"	22	3	2900-3300	60-68	48-899202A46	Enertia		Comp Series
13.63"	21	3	3100-3500	57-64	48-899002A46	Enertia	48-899003A46	Comp Series
13.80"	20	3	3250-3750	54-61	48-899000A46	Enertia		Comp Series
14.00"	19	3	3400-4000	51-58	48-898998A46	Enertia	48-898999A46	Comp Series
14.22"	18	3	3650-4500	45-54	48-898996A46	Enertia		Comp Series
14.45"	17	3	3900-5000	39-49	48-898994A46	Enertia	48-898994A46	Comp Series
14.72"	16	3	4300-5500	37-47	48-898992A46	Enertia		Comp Series

Diameter	Pitch	No. of Blades	Boat Weight	Boat Speed	RH - Part Number	Description	LH - Part Number	Performance Category
15.00"	15	3	4600-6000	35-45	48-898990A46	Enertia	48-898991A46	Comp Series
15.00"	14	3	5000-5500	25-38	48-898988A46	Enertia	48-8M0079504	Comp Series
15.00"	13	3	5500+	1-28	48-8M0070076	Enertia	48-8M0070076	Comp Series
14.62"	21	4	3100-3500	57-64	48-857028A46	Revolution 4	48-857029A46	Comp Series
14.62"	20	4	3250-3750	54-61	48-8M0070052	Revolution 4	48-8M0070051	Comp Series
14.62"	19	4	3400-4000	51-58	48-857026A46	Revolution 4	48-857027A46	Comp Series
14.62"	17	4	3900-5000	39-49	48-857024A46	Revolution 4	48-857025A46	Comp Series
14.62"	15	4	4600-6000	35-45	48-857022A46	Revolution 4	48-8M0064449	Comp Series
14.75"	21	3	3100-3500	57-64	48- 13702A46	Mirage Plus	48- 13703A46	Elite Series
15.25"	19	3	3400-4000	51-58	48- 13700A46	Mirage Plus	48- 13701A46	Elite Series
15.5"	17	3	3900-5000	39-49	48- 18278A46	Mirage Plus	48- 90159A46	Elite Series
15.75"	15	3	4600-6000	35-45	48- 19838A46	Mirage Plus	48- 19841A46	Elite Series
16"	13	3	5500+	25-38	48-826072A46	Mirage Plus		Elite Series

Verado 225 HP - Tri / Pontoon

Engine RPM Range: 5800-6400 Gearcase Ratio: 1.85:1

Diameter	Pitch	No. of Blades	Boat Weight	Boat Speed	RH - Part Number	Description	LH - Part Number	Performance Category
13.45"	22	3	2700-3100	60-68	48-899202A46	Enertia		Comp Series
13.63"	21	3	2800-3200	57-64	48-899002A46	Enertia	48-899003A46	Comp Series
13.80"	20	3	2950-3400	54-61	48-899000A46	Enertia		Comp Series
14.00"	19	3	3100-3600	51-58	48-898998A46	Enertia	48-898999A46	Comp Series
14.22"	18	3	3300-3850	48-55	48-898996A46	Enertia		Comp Series
14.45"	17	3	3500-4100	45-52	48-898994A46	Enertia	48-898994A46	Comp Series
14.72"	16	3	3800-4800	40-49	48-898992A46	Enertia		Comp Series
15.00"	15	3	4100-5500	35-45	48-898990A46	Enertia	48-898991A46	Comp Series
15.30"	14	3	4500-6000	30-41	48-898988A46	Enertia	48-8M0079504	Comp Series
15.6"	13	3	5000+	25-38	48-8M0070074	Enertia	48-8M0070076	Comp Series
14.62"	25	4	2200-2500	69-78	48-857032A46	Revolution 4	48-857033A46	Comp Series
14.62"	23	4	2500-2800	63-71	48-857030A46	Revolution 4	48-857031A46	Comp Series
14.62"	21	4	2800-3200	57-64	48-857028A46	Revolution 4	48-857029A46	Comp Series
14.62"	20	4	2950-3400	54-61	48-8M0070052	Revolution 4	48-8M0070051	Comp Series
14.62"	19	4	3100-3600	51-58	48-857026A46	Revolution 4	48-857027A46	Comp Series
14.62"	17	4	3500-4100	45-52	48-857024A46	Revolution 4	48-857025A46	Comp Series
14.62"	15	4	4100-5500	35-45	48-857022A46	Revolution 4	48-8M0064449	Comp Series
14.50"	25	3	2200-2500	69-78	48- 13706A46	Mirage Plus	48- 13707A46	Elite Series
14.63"	23	3	2500-2800	63-71	48- 13704A46	Mirage Plus	48- 13705A46	Elite Series
14.75"	21	3	2800-3200	57-64	48- 13702A46	Mirage Plus	48- 13703A46	Elite Series
15.25"	19	3	3100-3600	51-58	48- 13700A46	Mirage Plus	48- 13701A46	Elite Series
15.5"	17	3	3500-4100	45-52	48- 18278A46	Mirage Plus	48- 90159A46	Elite Series
15.75"	15	3	4100-5500	35-45	48- 19838A46	Mirage Plus	48- 19841A46	Elite Series
16.00"	13	3	4100-5500	35-45	48-826072A46	Mirage Plus		Elite Series

Pro FourStroke 200 HP - V6 - Tri / Pontoon

Engine RPM Range: 5800 - 6400 Gearcase Ratio 1.85:1

Diameter	Pitch	No. of Blades	Boat Weight	Boat Speed	RH - Part Number	Description	Performance Category
13.8"	20	3	2750-2950	54-63	48-899000A46	Enertia	Comp Series
14"	19	3	2800-3200	51-58	48-898998A46	Enertia	Comp Series
14.2"	18	3	2950-3450	47-55	48-898996A46	Enertia	Comp Series
14.5"	17	3	3100-3700	45-52	48-898994A46	Enertia	Comp Series
14.7"	16	3	3350-4250	41-50	48-898992A46	Enertia	Comp Series
15"	15	3	3600-4400	38-47	48-898990A46	Enertia	Comp Series
15.3"	14	3	3900-5200	35-43	48-898988A46	Enertia	Comp Series

MERCURY PROPELLER RIGGING CHART

Diameter	Pitch	No. of Blades	Boat Weight	Boat Speed	RH - Part Number	Description	Performance Category
15.6"	13	3	4100-5800	31-40	48-8M0070074	Enertia	Comp Series
16.0"	11	3	6000+	1-29	48-8M0070079	Enertia	Comp Series
14.0"	23	3	2200-2500	63-71	48-8M0084497	SpitFire	Elite Series
14.0"	21	3	2500-2800	57-64	48-8M0084496	SpitFire	Elite Series
14.0"	19	3	2800-3200	51-58	48-8M0084495	SpitFire	Elite Series
14.0"	17	3	2200-2500	63-71	48-8M0084494	SpitFire	Elite Series
14.0"	14	3	3900-5200	35-43	48-8M0084493	SpitFire	Elite Series
14.0"	12	3	4900-6800	26-35	48-8M0084491	SpitFire	Elite Series
14.25"	21	3	2500-2800	57-64	48-832832A45	Black Max	Sport Series
14.5"	19	3	2800-3200	51-58	48-832830A45	Black Max	Sport Series
15.0"	17	3	3100-3700	45-52	48-832828A45	Black Max	Sport Series
14.5"	19	3	2800-3200	51-58	48-832830A45	Black Max	Sport Series
15.0"	17	3	3100-3700	45-52	48-832828A45	Black Max	Sport Series
15.25"	15	3	3600-4400	38-47	48- 78116A45	Black Max	Sport Series
16.00"	13	3	4100-5800	31-40	48- 78114A45	Black Max	Sport Series

Verado 200 HP – 4Cyl - Tri / Pontoon

Engine RPM Range: 5800-6400 Gearcase Ratio: 1.85:1

Diameter	Pitch	No. of Blades	Boat Weight	Boat Speed	RH - Part Number	Description	LH - Part Number	Performance Category
14.00"	19	3	3300-3900	43-50	48-898998A46	Enertia	48-898999A46	Comp Series
14.22"	18	3	3500-4300	39-47	48-898996A46	Enertia		Comp Series
14.45"	17	3	3800-4700	36-44	48-898994A46	Enertia	48-898994A46	Comp Series
14.72"	16	3	4100-5200	33-41	48-898992A46	Enertia		Comp Series
15.00"	15	3	4400-6000	29-38	48-898990A46	Enertia	48-898991A46	Comp Series
15.30"	14	3	4900-6800	26-35	48-898988A46	Enertia		Comp Series
15.60"	13	3	5400-8200	22-32	48-8M0070074	Enertia	48-8M0070076	Comp Series
16.00"	11	3	6000+	1-25	48-8M0070079	Enertia	48-8M0070077	Comp Series
15.25"	19	3	3300-3900	43-50	48-8M0084496	SpitFire		Elite Series
15.5"	17	3	3800-4700	36-44	48-8M0084494	SpitFire		Elite Series
15.75"	14	3	3600-4400	29-38	48-8M0084493	SpitFire		Elite Series
16.00"	12	3	5400-8200	22-32	48-8M0084491	SpitFire		Elite Series
15.25"	19	3	3300-3900	43-50	48-832830A45	Black Max		Sport Series
15.5"	17	3	3800-4700	36-44	48-832828A45	Black Max		Sport Series
15.75"	15	3	3600-4400	29-38	48- 78116A45	Black Max		Sport Series
16.00"	13	3	5400-8200	22-32	48- 78114A45	Black Max		Sport Series
16.00"	11	3	6000+	1-25	48- 78112A45	Black Max		Sport Series

150 HP FourStroke - Tri / Pontoon

Engine RPM Range: 5000-5800 Gearcase Ratio: 1.92:1

Diameter	Pitch	No. of Blades	Boat Weight	Boat Speed	RH - Part Number	Description	LH - Part Number	Performance Category
13.50"	22	3	2100-2600	47-57	48-899202A46	Enertia		Comp Series
13.62"	21	3	2200-2800	44-54	48-899002A46	Enertia	48-899003A46	Comp Series
13.75"	20	3	2300-3000	42-52	48-899000A46	Enertia		Comp Series
14.00"	19	3	2500-3200	39-49	48-898998A46	Enertia	48-898999A46	Comp Series
14.25"	18	3	2700-3200	35-46	48-898996A46	Enertia		Comp Series
14.50"	17	3	2900-4000	32-43	48-898994A46	Enertia	48-898995A46	Comp Series
14.75"	16	3	3100-4500	29-40	48-898992A46	Enertia		Comp Series
15.00"	15	3	3400-5100	26-37	48-898990A46	Enertia	48-898991A46	Comp Series
15.30"	14	3	3800-6200	22-34	48-898988A46	Enertia		Comp Series
15.60"	13	3	4500-7000	1-28	48-8M0070074	Enertia	48-8M0070076	Comp Series
16.00"	11	3	7000+	1-25	48-8M0070079	Enertia	48-8M0070077	Comp Series
14.00"	19	4	2500-3200	39-49	48-8M0084495	SpitFire		Elite Series
14.00"	17	4	2900-4000	32-43	48-8M0084494	SpitFire		Elite Series

Diameter	Pitch	No. of Blades	Boat Weight	Boat Speed	RH - Part Number	Description	LH - Part Number	Performance Category
14.00"	14	4	3800-6200	22-34	48-8M0084493	SpitFire		Elite Series
14.00"	12	4	7000+	1-25	48-8M0084491	SpitFire		Elite Series
14.50"	19	3	2500-3200	39-79	48-832830A45	Black Max		Sport Series
15.00"	17	3	2900-4000	32-43	48-832828A45	Black Max		Sport Series
15.25"	15	3	3400-5100	26-37	48- 78116A45	Black Max		Sport Series
16.00"	13	3	4500-7000	1-28	48- 78114A45	Black Max		Sport Series
16.00"	11	3	7000+	1-25	48- 78112A45	Black Max		Sport Series

115 CT HP FourStroke - Tri / Pontoon

Engine RPM Range: 5000-6000 Gearcase Ratio: 2.38:1

Diameter	Pitch	No. of Blades	Boat Weight	Boat Speed	RH - Part Number	Description	LH - Part Number	Performance Category
13.50"	22	3	2000-2800	35-47	48-899202A46	Enertia		Comp Series
13.80"	21	3	2100-3100	32-45	48-899002A46	Enertia	48-899003A46	Comp Series
13.75"	20	3	2300-3500	29-42	48-899000A46	Enertia		Comp Series
14.00"	19	3	2400-3700	27-40	48-898998A46	Enertia	48-898999A46	Comp Series
14.20"	18	3	2600-4300	24-37	48-898996A46	Enertia		Comp Series
14.50"	17	3	2800-5000	21-35	48-898994A46	Enertia	48-898995A46	Comp Series
14.70"	16	3	3100-5600	19-32	48-898992A46	Enertia		Comp Series
15.00"	15	3	3500-6700	16-29	48-898990A46	Enertia	48-898991A46	Comp Series
15.30"	14	3	3900-7800	14-26	48-898988A46	Enertia	48-8M0079504	Comp Series
15.60"	13	3	4300-10300	11-24	48-8M0070074	Enertia	48-8M0070076	Comp Series
16.00"	11	3	7000+	1-18	48-8M0070079	Enertia	48-8M0070077	Comp Series
14.00"	23	4	1900-2600	38-49	48-8M0084497	SpitFire		Elite Series
14.00"	21	4	2100-3100	32-45	48-8M0084496	SpitFire		Elite Series
14.00"	19	4	2400-3700	27-40	48-8M0084495	SpitFire		Elite Series
14.00"	17	4	2800-5000	21-35	48-8M0084494	SpitFire		Elite Series
14.00"	14	4	3900-7800	14-26	48-8M0084493	SpitFire		Elite Series
14.00"	12	4	7000+	1-24	48-8M0084491	SpitFire		Elite Series
14.50"	19	3	2400-3700	27-40	48-832830A45	Black Max		Sport Series
15.00"	17	3	2800-5000	21-35	48-832828A45	Black Max		Sport Series
15.25"	15	3	3500-6700	16-29	48- 78116A45	Black Max		Sport Series
16.00"	13	3	4300-10300	11-24	48- 78114A45	Black Max		Sport Series
16.00"	12	3	5000+	9-21	48- 16436A45	Black Max		Sport Series
16.00"	11	3	7000+	1-18	48- 78112A45	Black Max	48- 78117A40	Sport Series

115 STD HP FourStroke - Tri / Pontoon

Engine RPM Range: 5000-6000 Gearcase Ratio: 2.07:1

Diameter	Pitch	No. of Blades	Boat Weight	Boat Speed	RH - Part Number	Description	Performance Category
12.7"	21	4	1800-2400	40-52	48-8M0055551	SpitFire X7	Elite Series
12.7"	19	4	2000-2900	34-47	48-8M0055550	SpitFire X7	Elite Series
13.0"	17	4	2300-3600	28-41	48-8M0055549	SpitFire X7	Elite Series
13.5"	15	4	2800-4700	22-35	48-8M0055548	SpitFire X7	Elite Series
14.0"	13	4	3500-6700	16-29	48-8M0055547	SpitFire X7	Elite Series
13"	18	3	2200-3200	31-44	48- 16988A46	Vengeance	Sport Series
13.13"	16	3	2500-4100	25-38	48- 16986A46	Vengeance	Sport Series
13.25"	15	3	2800-4700	22-35	48-854354A46	Vengeance	Sport Series
13.38"	14	3	3100-5600	19-32	48- 17314A46	Vengeance	Sport Series
14"	12	3	3900-8500	13-26	48- 17312A46	Vengeance	Sport Series
12.8"	19	4	2000-2900	34-47	48-8M8026600	SpitFire	Elite Series
12.8"	17	4	2300-3600	28-41	48-8M8026590	SpitFire	Elite Series
12.8"	15	4	2800-4700	22-35	48-8M8026580	SpitFire	Elite Series
13.8"	13	4	3500-6700	16-29	48-8M8026570	SpitFire	Elite Series
13.8"	11	4	4500-11500	10-23	48-8M8026560	SpitFire	Elite Series

MERCURY PROPELLER RIGGING CHART

Diameter	Pitch	No. of Blades	Boat Weight	Boat Speed	RH - Part Number	Description	Performance Category
12.5"	23	3	1600-2100	45-57	48- 77350A45	Black Max	Sport Series
12.75"	21	3	1800-2400	40-52	48- 77348A45	Black Max	Sport Series
13"	19	3	2000-2900	34-47	48- 77346A45	Black Max	Sport Series
13.25"	17	3	2300-3600	28-41	48- 77344A45	Black Max	Sport Series
13.25"	16	3	2500-4100	25-38	48-854360A45	Black Max	Sport Series
13.75"	15	3	2800-4700	22-35	48- 77342A45	Black Max	Sport Series
13.88"	14	3	3100-5600	19-32	48-854352A45	Black Max	Sport Series
14"	13	3	3500-6700	16-29	48- 77340A45	Black Max	Sport Series
14"	11	3	4700+	1-23	48- 77338A45	Black Max	Sport Series

90 CT HP FourStroke - Tri / Pontoon

Engine RPM Range: 5000-6000 Gearcase Ratio: 2.38:1

Diameter	Pitch	No. of Blades	Boat Weight	Boat Speed	RH - Part Number	Description	Performance Category
14.62"	23	3	1500-1900	38-49	48-825864A47	Tempest Plus	Elite Series
14.62"	22	3	1600-2200	35-47	48-8M8026820	Tempest Plus	Elite Series
14.62"	21	3	1600-2400	32-45	48-825862A47	Tempest Plus	Elite Series
14.62"	19	3	1900-2900	27-40	48-825860A47	Tempest Plus	Elite Series
14.62"	17	3	2200-3900	21-35	48-8M8026790	Tempest Plus	Elite Series
13.75"	21	3	1600-2400	32-45	48- 16318A46	Vengeance	Sport Series
14.00"	19	3	1900-2900	27-40	48- 16316A46	Vengeance	Sport Series
14.50"	17	3	2200-3900	21-35	48- 16314A46	Vengeance	Sport Series
14.00"	23	4	1500-1900	38-49	48-8M0084497	SpitFire	Elite Series
14.00"	21	4	1600-2400	32-45	48-8M0084496	SpitFire	Elite Series
14.00"	19	4	1900-2900	27-40	48-8M0084495	SpitFire	Elite Series
14.00"	17	4	2200-3900	21-35	48-8M0084494	SpitFire	Elite Series
14.00"	23	3	1500-1900	38-49	48-832834A45	Black Max	Sport Series
14.25"	21	3	1600-2400	32-45	48-832832A45	Black Max	Sport Series
14.50"	19	3	1900-2900	27-40	48-832830A45	Black Max	Sport Series
15.00"	17	3	2200-3900	21-35	48-832828A45	Black Max	Sport Series
15.25"	15	3	2700-5300	16-29	48- 78116A45	Black Max	Sport Series

90 STD HP FourStroke - Tri / Pontoon

Engine RPM Range: 5000-6000 Gearcase Ratio: 2.07:1

Diameter	Pitch	No. of Blades	Boat Weight	Boat Speed	RH - Part Number	Description	Performance Category
12.7"	21	4	1400-1900	40-52	48-8M0055551	SpitFire X7	Elite Series
12.7"	19	4	1600-2300	34-47	48-8M0055550	SpitFire X7	Elite Series
13.0"	17	4	1800-2800	28-41	48-8M0055549	SpitFire X7	Elite Series
13.5"	15	4	2200-3700	22-35	48-8M0055548	SpitFire X7	Elite Series
14.00"	13	4	2700-5300	16-29	48-8M0055547	SpitFire X7	Elite Series
13"	18	3	1700-2500	31-44	48- 16988A46	Vengeance	Sport Series
13.13"	16	3	2000-3200	25-38	48- 16986A46	Vengeance	Sport Series
13.25"	15	3	2200-3700	22-35	48-854354A46	Vengeance	Sport Series
13.38"	14	3	2400-4400	19-32	48- 17314A46	Vengeance	Sport Series
14"	12	3	2700-5300	13-26	48- 17312A46	Vengeance	Sport Series
12.8"	19	4	1600-2300	34-47	48-8M8026600	SpitFire	Elite Series
12.8"	17	4	1800-2800	28-41	48-8M8026590	SpitFire	Elite Series
12.8"	15	4	2200-3700	22-35	48-8M8026580	SpitFire	Elite Series
13.8"	13	4	2700-5300	16-29	48-8M8026570	SpitFire	Elite Series
13.8"	11	4	4000+	10-23	48-8M8026560	SpitFire	Elite Series
12.5"	23	3	1300-1600	45-57	48- 77350A45	Black Max	Sport Series
12.75"	21	3	1400-1900	40-52	48- 77348A45	Black Max	Sport Series
13"	19	3	1600-2300	34-47	48- 77346A45	Black Max	Sport Series
13.25"	17	3	1800-2800	28-41	48- 77344A45	Black Max	Sport Series

Diameter	Pitch	No. of Blades	Boat Weight	Boat Speed	RH - Part Number	Description	Performance Category
13.25"	16	3	2000-3200	25-38	48-854360A45	Black Max	Sport Series
13.75"	15	3	2200-3700	22-35	48- 77342A45	Black Max	Sport Series
13.88"	14	3	2400-4400	19-32	48-854352A45	Black Max	Sport Series
14"	13	3	2700-5300	16-29	48- 77340A45	Black Max	Sport Series
14"	11	3	4000+	1-22	48- 77338A45	Black Max	Sport Series

75 STD HP FourStroke - Tri / Pontoon

Engine RPM Range: 5000-6000 Gearcase Ratio: 2.07:1

Diameter	Pitch	No. of Blades	Boat Weight	Boat Speed	RH - Part Number	Description	Performance Category
12.7"	21	4	1300-1900	34-47	48-8M0055551	SpitFire X7	Elite Series
12.7"	19	4	1500-2300	29-42	48-8M0055550	SpitFire X7	Elite Series
13.0"	17	4	1700-2900	23-37	48-8M0055549	SpitFire X7	Elite Series
13.5"	15	4	2100-3900	18-31	48-8M0055548	SpitFire X7	Elite Series
14.0"	13	4	2500-6100	12-26	48-8M0055547	SpitFire X7	Elite Series
13"	18	3	1600-2500	26-40	48- 16988A46	Vengeance	Sport Series
13.13"	16	3	1900-3400	20-34	48- 16986A46	Vengeance	Sport Series
13.25"	15	3	2100-3900	18-31	48-854354A46	Vengeance	Sport Series
13.38"	14	3	2300-4700	15-28	48- 17314A46	Vengeance	Sport Series
14"	12	3	2900-7500	10-23	48- 17312A46	Vengeance	Sport Series
12.8"	19	4	1500-2300	29-42	48-8M8026600	SpitFire	Elite Series
12.8"	17	4	1700-2900	23-37	48-8M8026590	SpitFire	Elite Series
12.8"	15	4	2100-3900	18-31	48-8M8026580	SpitFire	Elite Series
13.75"	13	4	2500-6100	12-26	48-8M8026570	SpitFire	Elite Series
13.75"	11	4	3800+	1-20	48-8M8026560	SpitFire	Elite Series
13.75"	10	4	4200+	1-18	48-8M8026555	SpitFire	Elite Series
12.5"	23	3	1200-1600	39-52	48- 77350A45	Black Max	Sport Series
12.75"	21	3	1300-1900	34-47	48- 77348A45	Black Max	Sport Series
13"	19	3	1500-2300	29-42	48- 77346A45	Black Max	Sport Series
13.25"	17	3	1700-2900	23-37	48- 77344A45	Black Max	Sport Series
13.25"	16	3	1900-3400	20-34	48-854360A45	Black Max	Sport Series
13.75"	15	3	2100-3900	18-31	48- 77342A45	Black Max	Sport Series
13.88"	14	3	2300-4700	15-28	48-854352A45	Black Max	Sport Series
14.00"	13	3	2500-6100	12-26	48- 77340A45	Black Max	Sport Series
14.00"	11	3	3800+	1-20	48- 77338A45	Black Max	Sport Series
14.00"	10	3	4200+	1-18	48-854342A45	Black Max	Sport Series

60 CT HP FourStroke – Tri / Pontoon

Engine RPM Range: 5500-6000 Gearcase Ratio: 2.33:1

Diameter	Pitch	No of Blades	Boat Weight	Boat Speed	RH Part Number	Propeller Name	Performance Series
13.0"	17	4	1400-1800	34-38	48-8M0055549	SpitFire X7	Elite Series
13.5"	15	4	1700-2300	28-34	48-8M0055548	SpitFire X7	Elite Series
14.0"	13	4	2000-3300	23-30	48-8M0055547	SpitFire X7	Elite Series
12.8"	17	4	1400-1800	34-38	48-8M8026590	SpitFire	Elite Series
12.8"	15	4	1700-2300	28-34	48-8M8026580	SpitFire	Elite Series
13.8"	13	4	2000-3300	23-30	48-8M8026570	SpitFire	Elite Series
13.8"	11	4	2700-5400	18-25	48-8M8026560	SpitFire	Elite Series
13.25"	17	3	1400-1800	34-38	48- 77344A45	Black Max	Sport Series
13.25"	16	3	1500-2000	30-36	48-854360A45	Black Max	Sport Series
13.75"	15	3	1700-2300	28-34	48- 77342A45	Black Max	Sport Series
13.88"	14	3	1800-2700	26-32	48-854352A45	Black Max	Sport Series
14"	13	3	2000-3300	23-30	48- 77340A45	Black Max	Sport Series
14"	11	3	2700-5400	18-25	48- 77338A45	Black Max	Sport Series

MERCURY PROPELLER RIGGING CHART

Diameter	Pitch	No of Blades	Boat Weight	Boat Speed	RH Part Number	Propeller Name	Performance Series
14"	10	3	3500+	1-18	48-854342A45	Black Max	Sport Series
14"	9	3	4000+	1-15	48-854340A45	Black Max	Sport Series

60 STD HP FourStroke - Tri / Pontoon

Engine RPM Range: 5500-6000 Gearcase ratio: 2.33:1

Diameter	Pitch	No. of Blades	Boat Weight	Boat Speed	RH - Part Number	Description	Performance Category
10.25	15	3	1200-1600	15-33	48-855862A46	Vengeance	Sport Series
10.4	14	3	1300-1700	16-30	48-855860A46	Vengeance	Sport Series
10.5	13	3	1500-2000	17-26	48-855858A46	Vengeance	Sport Series
11.0	12	3	1700-2500	19-22	48-855856A46	Vengeance	Sport Series
11.6	11	3	2000-3100	18-21	48-823478A46	Vengeance	Sport Series
12.25	9	3	2100-3500	16-22	48- 97868A46	Vengeance	Sport Series
10.1	15	4	1200-1600	15-33	48-8M8026640	SpitFire	Elite Series
10.1	14	4	1300-1700	16-30	48-8M8026635	SpitFire	Elite Series
10.3	13	4	1500-2000	17-26	48-8M8026630	SpitFire	Elite Series
10.6	12	4	1700-2500	19-22	48-8M8026625	SpitFire	Elite Series
10	19	3	900-1000	11-47	48- 73146A45	Black Max	Sport Series
10	17	3	1000-1300	13-40	48- 73144A45	Black Max	Sport Series
10	16	3	1100-1400	14-37	48- 73142A45	Black Max	Sport Series
10.1	15	3	1200-1600	15-33	48- 73140A45	Black Max	Sport Series
10.25	14	3	1300-1700	16-30	48- 73138A45	Black Max	Sport Series
10.4	13	3	1500-2000	17-26	48- 73136A45	Black Max	Sport Series
10.7	12	3	1700-2500	19-22	48- 73134A45	Black Max	Sport Series
10.9	11	3	2000-3100	18-21	48- 85632A45	Black Max	Sport Series
11.25	10	3	2100-3500	16-22	48- 73132A45	Black Max	Sport Series

50 CT HP FourStroke – Tri / Pontoon

Engine RPM Range: 5500-6000 Gearcase Ratio: 2.33:1

Diameter	Pitch	No of Blades	Boat Weight	Boat Speed	RH Part Number	Propeller Name	Performance Series
13.5"	15	4	1400-2000	28-34	48-8M0055548	SpitFire X7	Elite Series
14.0"	13	4	1700-2700	23-30	48-8M0055547	SpitFire X7	Elite Series
13.1"	16	3	1400-2000	28-34	48- 16986A46	Vengeance	Sport Series
13.4"	14	3	1500-2300	26-32	48- 17314A46	Vengeance	Sport Series
14.0"	12	3	2000-4000	1-23	48- 17312A46	Vengeance	Sport Series
14.0"	10	3	3000-5000	1-18	48- 17310A46	Vengeance	Sport Series
12.8"	15	4	1400-2000	28-34	48-8M8026580	SpitFire	Elite Series
13.8"	13	4	1700-2700	23-30	48-8M8026570	SpitFire	Elite Series
13.8"	11	4	2300-4500	18-25	48-8M8026560	SpitFire	Elite Series
14.0"	10	4	3000-5000	1-18	48-8M8026555	SpitFire	Elite Series
13.25"	16	3	1300-1700	30-36	48-854360A45	Black Max	Sport Series
13.75"	15	3	1400-2000	28-34	48- 77342A45	Black Max	Sport Series
13.88"	14	3	1500-2300	26-32	48-854352A45	Black Max	Sport Series
14.0"	13	3	1700-2700	23-30	48- 77340A45	Black Max	Sport Series
14.0"	11	3	2300-4500	18-25	48- 77338A45	Black Max	Sport Series
14.0"	10	3	3000-5000	1-18	48-854342A45	Black Max	Sport Series
14.0"	9	3	4000+	1+	48-854340A45	Black Max	Sport Series

50 STD HP FourStroke - Tri / Pontoon

Engine RPM Range: 5500-6000 Gearcase Ratio: 1.83:1

Diameter	Pitch	No. of Blades	Boat Weight	Boat Speed	RH - Part Number	Description	Performance Category
10.25	15	3	1000-1300	33-41	48-855862A46	Vengeance	Sport Series
10.4	14	3	1100-1400	30-38	48-855860A46	Vengeance	Sport Series
10.5	13	3	1300-1700	26-34	48-855858A46	Vengeance	Sport Series
11	12	3	1400-2100	22-31	48-855856A46	Vengeance	Sport Series
11.6	11	3	1600-2600	18-27	48-823478A46	Vengeance	Sport Series
12.25	9	3	2300-4500	11-20	48- 97868A46	Vengeance	Sport Series
10.1	15	4	1000-1300	33-41	48-8M8026640	SpitFire	Elite Series
10.1	14	4	1100-1400	30-38	48-8M8026635	SpitFire	Elite Series
10.3	13	4	1300-1700	26-34	48-8M8026630	SpitFire	Elite Series
10.6	12	4	1400-2100	22-31	48-8M8026625	SpitFire	Elite Series
10	19	3	800-900	47-53	48- 73146A45	Black Max	Sport Series
10	17	3	900-1000	40-47	48- 73144A45	Black Max	Sport Series
10	16	3	900-1100	37-44	48- 73142A45	Black Max	Sport Series
10.1	15	3	1000-1300	33-41	48- 73140A45	Black Max	Sport Series
10.25	14	3	1100-1400	30-38	48- 73138A45	Black Max	Sport Series
10.4	13	3	1300-1700	26-34	48- 73136A45	Black Max	Sport Series
10.6	12	3	1400-2100	22-31	48- 73134A45	Black Max	Sport Series
10.8	11	3	1600-2600	18-27	48- 85632A45	Black Max	Sport Series
12	10.5	3	1800-2900	16-25	48- 42740A45	Black Max	Sport Series
11.25	10	3	1900-3400	14-24	48- 73132A45	Black Max	Sport Series
12.25	9	3	2300-4500	11-20	48- 87818A45	Black Max	Sport Series
12.5	8	3	2900-7400	7-16	48- 42738A45	Black Max	Sport Series

40 CT HP FourStroke – Tri / Pontoon

Engine RPM Range: 5500-6000 Gearcase Ratio: 2.33:1

Diameter	Pitch	No of Blades	Boat Weight	Boat Speed	RH Part Number	Propeller Name	Performance Series
13.5"	15	4	1100-1600	28-34	48-8M0055548	SpitFire X7	Elite Series
14.0"	13	4	1400-2200	23-30	48-8M0055547	SpitFire X7	Elite Series
13.4"	14	3	1200-1800	26-32	48- 17314A46	Vengeance	Sport Series
14.0"	12	3	1600-2800	20-27	48- 17312A46	Vengeance	Sport Series
14.0"	10	3	2000+	1-18	48- 17310A46	Vengeance	Sport Series
12.8"	15	4	1100-1600	28-34	48-8M8026580	SpitFire	Elite Series
13.8"	13	4	1400-2200	23-30	48-8M8026570	SpitFire	Elite Series
13.8"	11	4	1800-3600	18-25	48-8M8026560	SpitFire	Elite Series
14.0"	10	4	2000+	1-18	48-8M8026555	SpitFire	Elite Series
13.75"	15	3	1100-1600	28-34	48- 77342A45	Black Max	Sport Series
13.88"	14	3	1200-1800	26-32	48-854352A45	Black Max	Sport Series
14.0"	13	3	1400-2200	23-30	48- 77340A45	Black Max	Sport Series
14.0"	11	3	1800-3600	18-25	48- 77338A45	Black Max	Sport Series
14.0"	10	3	2000+	1-18	48-854342A45	Black Max	Sport Series
14.0"	9	3	3000+	1+	48-854340A45	Black Max	Sport Series

40 STD HP FourStroke – Tri / Pontoon

Engine RPM Range: 5500-6000 Gearcase Ratio: 2.00:1

Diameter	Pitch	No. of Blades	Boat Weight	Boat Speed	RH - Part Number	Description	Performance Category
10.25	15	3	900-1200	29-37	48-855862A46	Vengeance	Sport Series
10.4	14	3	1000-1400	25-34	48-855860A46	Vengeance	Sport Series
10.5	13	3	1200-1600	22-30	48-855858A46	Vengeance	Sport Series
11	12	3	1300-2100	18-27	48-855856A46	Vengeance	Sport Series
11.6	11	3	1500-2500	15-24	48-823478A46	Vengeance	Sport Series

MERCURY PROPELLER RIGGING CHART

Diameter	Pitch	No. of Blades	Boat Weight	Boat Speed	RH - Part Number	Description	Performance Category
12.25	9	3	2200-5100	8-17	48- 97868A46	Vengeance	Sport Series
10.1	15	4	900-1200	29-37	48-8M8026640	SpitFire	Elite Series
10.1	14	4	1000-1400	25-34	48-8M8026635	SpitFire	Elite Series
10.3	13	4	1200-1600	22-30	48-8M8026630	SpitFire	Elite Series
10.6	12	4	1300-2100	18-27	48-8M8026625	SpitFire	Elite Series
10	19	3	700-800	42-48	48- 73146A45	Black Max	Sport Series
10	17	3	800-1000	35-43	48- 73144A45	Black Max	Sport Series
10	16	3	800-1100	32-40	48- 73142A45	Black Max	Sport Series
10.1	15	3	900-1200	29-37	48- 73140A45	Black Max	Sport Series
10.25	14	3	1000-1400	25-34	48- 73138A45	Black Max	Sport Series
10.4	13	3	1200-1600	22-30	48- 73136A45	Black Max	Sport Series
10.6	12	3	1300-2100	18-27	48- 73134A45	Black Max	Sport Series
10.8	11	3	1500-2500	15-24	48- 85632A45	Black Max	Sport Series
12	10.5	3	1600-3000	13-22	48- 42740A45	Black Max	Sport Series
11.25	10	3	1800-3600	11-20	48- 73132A45	Black Max	Sport Series
12.25	9	3	2200-5100	8-17	48- 87818A45	Black Max	Sport Series
12.5	8	3	2700-8700	5-14	48- 42738A45	Black Max	Sport Series

BASS: 115 - 250 HP

250 Pro XS - Bass

Engine RPM Range: 5500-6000 Gearcase Ratio: 1.75:1

Diameter	Pitch	No of Blades	Boat Weight	Boat Speed	RH Part Number	Propeller Name	Performance Category
14.62"	27	3	Up to 2600	75-83	48-825868A47	Tempest Plus	Elite
14.62"	26	3	Up to 2700	71-79	48-825874A47	Tempset Plus	Elite
14.62"	25	3	Up to 2800	67-75	48-825866A47	Tempest Plus	Elite
14.62"	24	3	2700-3000	65-72	48-825872A47	Tempest Plus	Elite
14.62"	23	3	2900-3200	62-68	48-825864A47	Tempest Plus	Elite
14.00"	27	3	Up to 2600	75-83	48-8M8023180	Fury	Comp
14.00"	26	3	Up to 2700	71-79	48-8M8023160	Fury	Comp
14.00"	25	3	2400-2900	64-75	48-8M8023140	Fury	Comp
14.00"	24	3	2500-3000	62-75	48-8M8023120	Fury	Comp
14.50"	26	3	Up to 2700	71-79	48-8M0114410	Fury 4	Comp
14.50"	25	3	2400-2900	64-75	48-8M0114409	Fury 4	Comp
14.50"	24	3	2500-3000	62-75	48-8M0114408	Fury 4	Comp

225 Pro XS - Bass

Engine RPM Range: 5500-6000 Gearcase Ratio: 1.75:1

Diameter	Pitch	No of Blades	Boat Weight	Boat Speed	RH Part Number	Propeller Name	Performance Category
14.62"	27	3	Up to 2600	67-80	48-825868A47	Tempest	Elite
14.62"	26	3	Up to 2700	65-77	48-825874A47	Tempest	Elite
14.62"	25	3	2400-2900	62-73	48-825866A47	Tempest	Elite
14.62"	24	3	2500-3000	60-70	48-825872A47	Tempest	Elite
14.62"	23	3	2600-3200	57-67	48-825864A47	Tempest	Elite
14.00"	27	3	Up to 2600	67-80	48-8M8023180	Fury	Comp
14.00"	26	3	Up to 2700	65-77	48-8M8023160	Fury	Comp
14.00"	25	3	2400-2900	62-73	48-8M8023140	Fury	Comp
14.00"	24	3	2500-3000	60-73	48-8M8023120	Fury	Comp
14.50"	26	3	Up to 2700	65-77	48-8M0114410	Fury 4	Comp
14.50"	25	3	2400-2900	62-73	48-8M0114409	Fury 4	Comp
14.50"	24	3	2500-3000	60-73	48-8M0114408	Fury 4	Comp

150 HP FourStroke - Bass

Engine RPM Range: 5000-5800 Gearcase Ratio: 1.92:1

Diameter	Pitch	No. of Blades	Boat Weight	Boat Speed	RH - Part Number	Description	Performance Category
14.62"	25	3	1800-2200	55-65	48-8M8023140	Fury	Comp Series
14.62"	24	3	1900-2300	53-62	48-8M8023120	Fury	Comp Series
14.5"	25	3	1800-2200	55-65	48-8M0114409	Fury 4	Comp Series
14.5"	24	3	1900-2300	53-62	48-8M0114408	Fury 4	Comp Series
14.62"	25	3	1800-2200	55-65	48-825866A47	Tempest Plus	Elite Series
14.62"	24	3	1900-2300	53-62	48-825872A47	Tempest Plus	Elite Series
14.62"	23	3	2000-2400	50-60	48-825864A47	Tempest Plus	Elite Series
14.62"	22	3	2100-2600	47-57	48-8M8026820	Tempest Plus	Elite Series
14.62"	21	3	2200-2800	44-54	48-825862A47	Tempest Plus	Elite Series
14.62"	19	3	2500-3200	39-49	48-825860A47	Tempest Plus	Elite Series
14.62"	17	3	2900-4000	32-43	48-8M8026790	Tempest Plus	Elite Series

115 CT HP FourStroke - Bass

Engine RPM Range: 5000-6000 Gearcase Ratio: 2.38:1

Diameter	Pitch	No. of Blades	Boat Weight	Boat Speed	RH - Part Number	Description	Performance Category
14.0"	24	3	1600-2300	38-49	48-8M8023120	Fury	Elite Series
14.5"	24	4	1600-2300	38-49	48-8M0114408	Fury 4	Elite Series
14.62"	24	3	1600-2300	38-49	48-825872A47	Tempest Plus	Elite Series
14.62"	23	3	1900-2600	38-49	48-825864A47	Tempest Plus	Elite Series
14.62"	22	3	2000-2800	35-47	48-8M8026820	Tempest Plus	Elite Series
14.62"	21	3	2100-3100	32-45	48-825862A47	Tempest Plus	Elite Series
14.62"	19	3	2400-3700	27-40	48-825860A47	Tempest Plus	Elite Series
14.62"	17	3	2800-5000	21-35	48-8M8026790	Tempest Plus	Elite Series
14.00"	23	4	1900-2600	38-49	48-8M0084497	SpitFire	Elite Series
14.00"	21	4	2100-3100	32-45	48-8M0084496	SpitFire	Elite Series
14.00"	19	4	2400-3700	27-40	48-8M0084495	SpitFire	Elite Series
14.00"	17	4	2800-5000	21-35	48-8M0084494	SpitFire	Elite Series
14.50"	23	3	1900-2600	27-40	48-832834A45	Black Max	Sport Series
15.00"	21	3	2100-3100	21-35	48-832832A45	Black Max	Sport Series
14.50"	19	3	2400-3700	27-40	48-832830A45	Black Max	Sport Series
15.00"	17	3	2800-5000	21-35	48-832828A45	Black Max	Sport Series

115 STD HP FourStroke - Bass

Engine RPM Range: 5000-6000 Gearcase Ratio: 2.07:1

Diameter	Pitch	No. of Blades	Boat Weight	Boat Speed	RH - Part Number	Description	Performance Category
12.7"	21	4	1800-2400	40-52	48-8M0055551	SpitFire X7	Elite Series
12.7"	19	4	2000-2900	34-47	48-8M0055550	SpitFire X7	Elite Series
13.0"	17	4	2300-3600	28-41	48-8M0055549	SpitFire X7	Elite Series
13.5"	15	4	2800-4700	22-35	48-8M0055548	SpitFire X7	Elite Series
13"	18	3	2200-3200	31-44	48- 16988A46	Vengeance	Sport Series
13.13"	16	3	2500-4100	25-38	48- 16986A46	Vengeance	Sport Series
13.25"	15	3	2800-4700	22-35	48-854354A46	Vengeance	Sport Series
12.8"	19	4	2000-2900	34-47	48-8M8026600	SpitFire	Elite Series
12.8"	17	4	2300-3600	28-41	48-8M8026590	SpitFire	Elite Series
12.8"	15	4	2800-4700	22-35	48-8M8026580	SpitFire	Elite Series
12.5"	23	3	1600-2100	45-57	48- 77350A45	Black Max	Sport Series
12.75"	21	3	1800-2400	40-52	48- 77348A45	Black Max	Sport Series
13"	19	3	2000-2900	34-47	48- 77346A45	Black Max	Sport Series
13.25"	17	3	2300-3600	28-41	48- 77344A45	Black Max	Sport Series
13.25"	16	3	2500-4100	25-38	48-854360A45	Black Max	Sport Series

MERCURY PROPELLER RIGGING CHART

OFFSHORE / BAY / FLATS CENTER CONSOLE: 40 - 350 HP

Verado 350 HP - Offshore / Bay / Flats Center Console (Single and Twin)

Engine RPM Range: 5800 - 6400 Gearcase Ratio 1.75:1

No. of Engine	Diameter	Pitch	No. of Blades	Boat Weight	Boat Speed	RH Part Number	Description	LH Part Number	Performance Category
Single	16.00"	23	3	3700-4200	65-74	48-8M0040404	Enertia ECO	48-8M0040405	Comp Series
Single	16.00"	22	3	3700-4200	65-74	48-8M0040408	Enertia ECO	48-8M0040409	Comp Series
Single	16.00"	21	3	4200-4700	59-66	48-8M0040402	Enertia ECO	48-8M0040403	Comp Series
Single	16.00"	20	3	4400-5000	55-63	48-8M0040406	Enertia ECO	48-8M0040407	Comp Series
Single	16.00"	19	3	4600-5300	53-60	48-8M0040400	Enertia ECO	48-8M0040401	Comp Series
Single	16.00"	18	3	8900-10400	65-74	48-8M0040396	Enertia ECO	48-8M0040397	Comp Series
Single	16.00"	17	3	5300-6300	46-53	48-8M0040398	Enertia ECO	48-8M0040399	Comp Series
Single	14.62"	21	4	4200-4700	59-66	48-857028A46	Revolution 4	48-857029A46	Comp Series
Single	14.62"	19	4	4600-5300	53-60	48-857026A46	Revolution 4	48-857027A46	Comp Series
Single	14.62"	17	4	5300-6300	46-53	48-857024A46	Revolution 4	48-857025A46	Comp Series
Single	14.62"	15	4	6300-7500	39-46	48-857022A46	Revolution 4	48-8M0064449	Comp Series
Single	14.38"	27	3	3000-3500	78-88	48- 18280A46	Mirage Plus	48- 18281A46	Elite Series
Single	14.50"	25	3	3300-3800	71-81	48- 13706A46	Mirage Plus	48- 13707A46	Elite Series
Single	14.63"	23	3	3700-4200	65-74	48- 13704A46	Mirage Plus	48- 13705A46	Elite Series
Single	14.75"	21	3	4200-4700	59-66	48- 13702A46	Mirage Plus	48- 13703A46	Elite Series
Single	15.25"	19	3	4600-5300	53-60	48- 13700A46	Mirage Plus	48- 13701A46	Elite Series
Single	15.38"	18	3	5000-5700	50-56	48-889620A46	Mirage Plus	48-889619A46	Elite Series
Single	15.5"	17	3	5300-6300	46-53	48- 18278A46	Mirage Plus	48- 90159A46	Elite Series
Single	15.75"	15	3	6300-7500	39-46	48- 19838A46	Mirage Plus	48- 19841A46	Elite Series
Single	14.62"	25	4	3300-3800	71-81	48-857032A46	Revolution 4	48-857033A46	Comp Series
Single	14.62"	23	4	3700-4200	65-74	48-857030A46	Revolution 4	48-857031A46	Comp Series
Twin	16.00"	23	3	5800-7200	65-74	48-8M0040404	Enertia ECO	48-8M0040405	Comp Series
Twin	16.00"	22	3	5800-7200	65-74	48-8M0040408	Enertia ECO	48-8M0040409	Comp Series
Twin	16.00"	21	3	7000-8300	59-66	48-8M0040402	Enertia ECO	48-8M0040403	Comp Series
Twin	16.00"	20	3	7500-8900	56-63	48-8M0040406	Enertia ECO	48-8M0040407	Comp Series
Twin	16.00"	19	3	8100-9600	53-60	48-8M0040400	Enertia ECO	48-8M0040401	Comp Series
Twin	16.00"	18	3	8900-10400	65-74	48-8M0040396	Enertia ECO	48-8M0040397	Comp Series
Twin	16.00"	17	3	9600-12200	46-53	48-8M0040398	Enertia ECO	48-8M0040399	Comp Series
Twin	14.62"	25	4	5000-6300	71-81	48-857032A46	Revolution 4	48-857033A46	Comp Series
Twin	14.62"	23	4	5800-7200	65-74	48-857030A46	Revolution 4	48-857031A46	Comp Series
Twin	14.62"	21	4	7000-8300	59-66	48-857028A46	Revolution 4	48-857029A46	Comp Series
Twin	14.62"	20	4	7500-8900	56-63	48-8M0070052	Revolution 4	48-8M0070051	Comp Series
Twin	14.62"	19	4	8100-9600	53-60	48-857026A46	Revolution 4	48-857027A46	Comp Series
Twin	14.62"	17	4	9600-12200	46-53	48-857024A46	Revolution 4	48-857025A46	Comp Series
Twin	14.62"	15	4	11600-15300	39-46	48-857022A46	Revolution 4	48-8M0064449	Comp Series
Twin	14.38"	27	3	4300-5300	78-88	48- 18280A46	Mirage Plus	48- 18281A46	Elite Series
Twin	14.50"	25	3	5000-6300	71-81	48- 13706A46	Mirage Plus	48- 13707A46	Elite Series
Twin	14.63"	23	3	5800-7200	65-74	48- 13704A46	Mirage Plus	48- 13705A46	Elite Series
Twin	14.75"	21	3	7000-8300	59-66	48- 13702A46	Mirage Plus	48- 13703A46	Elite Series
Twin	15.25"	19	3	8100-9600	53-60	48- 13700A46	Mirage Plus	48- 13701A46	Elite Series
Twin	15.38"	18	3	8900-10400	50-56	48-889620A46	Mirage Plus	48-889619A46	Elite Series
Twin	15.5"	17	3	9600-12200	46-53	48- 18278A46	Mirage Plus	48- 90159A46	Elite Series
Twin	15.75"	15	3	11600-15300	39-46	48- 19838A46	Mirage Plus	48- 19841A46	Elite Series

Verado 300 HP - Offshore / Bay / Flats Center Console (Single)

Engine RPM Range: 5800-6400 Gearcase Ratio: 1.75:1 and 1.85:1

Diameter	Pitch	No. of Blades	Boat Weight	Boat Speed	RH - Part Number	Description	LH - Part Number	Performance Category
16.00"	23	3	3100-3600	65-74	48-8M0040404	Enertia ECO	48-8M0040405	Comp Series
16.00"	22	3	3300-3800	62-70	48-8M0040408	Enertia ECO	48-8M0040409	Comp Series
16.00"	21	3	3600-4100	59-66	48-8M0040402	Enertia ECO	48-8M0040403	Comp Series
16.00"	20	3	3800-4300	56-63	48-8M0040406	Enertia ECO	48-8M0040407	Comp Series
16.00"	19	3	4000-4600	53-60	48-8M0040400	Enertia ECO	48-8M0040401	Comp Series
16.00"	18	3	4300-4900	50-56	48-8M0040396	Enertia ECO	48-8M0040397	Comp Series
16.00"	17	3	4600-5400	46-53	48-8M0040398	Enertia ECO	48-8M0040399	Comp Series
13.45"	22	3	3300-3800	62-70	48-899202A46	Enertia		Comp Series
13.63"	21	3	3600-4100	59-66	48-899002A46	Enertia	48-899003A46	Comp Series
13.80"	20	3	3800-4300	56-63	48-899000A46	Enertia		Comp Series
14.00"	19	3	4000-4600	53-60	48-898998A46	Enertia	48-898999A46	Comp Series
14.22"	18	3	4300-4900	50-56	48-898996A46	Enertia		Comp Series
14.45"	17	3	4600-5400	46-53	48-898994A46	Enertia	48-898994A46	Comp Series
14.72"	16	3	4900-5800	43-50	48-898992A46	Enertia		Comp Series
15.00"	15	3	5400-6500	39-46	48-898990A46	Enertia	48-898991A46	Comp Series
14.62"	25	4	2800-3300	71-81	48-857032A46	Revolution 4	48-857033A46	Comp Series
14.62"	23	4	3100-3600	65-74	48-857030A46	Revolution 4	48-857031A46	Comp Series
14.62"	21	4	3600-4100	59-66	48-857028A46	Revolution 4	48-857029A46	Comp Series
14.62"	20	4	3800-4300	56-63	48-8M0070052	Revolution 4	48-8M0070051	Comp Series
14.62"	19	4	4000-4600	53-60	48-857026A46	Revolution 4	48-857027A46	Comp Series
14.62"	17	4	4600-5400	46-53	48-857024A46	Revolution 4	48-857025A46	Comp Series
14.62"	15	4	5400-6500	39-46	48-857022A46	Revolution 4	48-8M0064449	Comp Series
14.50"	25	3	2800-3300	71-81	48- 13706A46	Mirage Plus	48- 13707A46	Elite Series
14.63"	23	3	3100-3600	65-74	48- 13704A46	Mirage Plus	48- 13705A46	Elite Series
14.75"	21	3	3600-4100	59-66	48- 13702A46	Mirage Plus	48- 13703A46	Elite Series
15.25"	19	3	4000-4600	53-60	48- 13700A46	Mirage Plus	48- 13701A46	Elite Series
15.38"	18	3	4300-4900	50-56	48-889620A46	Mirage Plus	48-889619A46	Elite Series
15.5"	17	3	4600-5400	46-53	48- 18278A46	Mirage Plus	48- 90159A46	Elite Series
15.75"	15	3	5400-6500	39-46	48- 19838A46	Mirage Plus	48- 19841A46	Elite Series

Verado 250 HP - Offshore / Bay / Flats Center Console (Single)

Engine RPM Range: 5800-6400 Gearcase Ratio: 1.85:1

Diameter	Pitch	No. of Blades	Boat Weight	Boat Speed	RH - Part Number	Description	LH - Part Number	Performance Category
16"	23	3	2700-3100	63-71	48-8M0040404	Enertia ECO	48-8M0040405	Comp Series
16"	22	3	2900-3300	60-68	48-8M0040408	Enertia ECO	48-8M0040409	Comp Series
16"	21	3	3100-3500	57-64	48-8M0040402	Enertia ECO	48-8M0040403	Comp Series
16"	20	3	3250-3750	54-61	48-8M0040406	Enertia ECO	48-8M0040407	Comp Series
16"	19	3	3400-4000	51-58	48-8M0040400	Enertia ECO	48-8M0040401	Comp Series
16"	18	3	3650-4500	45-54	48-8M0040396	Enertia ECO	48-8M0040397	Comp Series
16"	17	3	3900-5000	39-49	48-8M0040398	Enertia ECO	48-8M0040399	Comp Series
13.45"	22	3	2900-3300	60-68	48-899202A46	Enertia		Comp Series
13.63"	21	3	3100-3500	57-64	48-899002A46	Enertia	48-899003A46	Comp Series
13.80"	20	3	3250-3750	54-61	48-899000A46	Enertia		Comp Series
14.00"	19	3	3400-4000	51-58	48-898998A46	Enertia	48-898999A46	Comp Series
14.22"	18	3	3650-4500	45-54	48-898996A46	Enertia		Comp Series
14.45"	17	3	3900-5000	39-49	48-898994A46	Enertia	48-898994A46	Comp Series
14.72"	16	3	4300-5500	37-47	48-898992A46	Enertia		Comp Series
15.00"	15	3	4600-6000	35-45	48-898990A46	Enertia	48-898991A46	Comp Series
14.62"	25	4	2500-2800	69-78	48-857032A46	Revolution 4	48-857033A46	Comp Series
14.62"	23	4	2700-3100	63-71	48-857030A46	Revolution 4	48-857031A46	Comp Series

MERCURY PROPELLER RIGGING CHART

Diameter	Pitch	No. of Blades	Boat Weight	Boat Speed	RH - Part Number	Description	LH - Part Number	Performance Category
14.62"	21	4	3100-3500	57-64	48-857028A46	Revolution 4	48-857029A46	Comp Series
14.62"	20	4	3250-3750	54-61	48-8M0070052	Revolution 4	48-8M0070051	Comp Series
14.62"	19	4	3400-4000	51-58	48-857026A46	Revolution 4	48-857027A46	Comp Series
14.62"	17	4	3900-5000	39-49	48-857024A46	Revolution 4	48-857025A46	Comp Series
14.62"	15	4	4600-6000	35-45	48-857022A46	Revolution 4	48-8M0064449	Comp Series
14.50"	25	3	2500-2800	69-78	48- 13706A46	Mirage Plus	48- 13707A46	Elite Series
14.63"	23	3	2700-3100	63-71	48- 13704A46	Mirage Plus	48- 13705A46	Elite Series
14.75"	21	3	3100-3500	57-64	48- 13702A46	Mirage Plus	48- 13703A46	Elite Series
15.25"	19	3	3400-4000	51-58	48- 13700A46	Mirage Plus	48- 13701A46	Elite Series
15.5"	17	3	3900-5000	39-49	48- 18278A46	Mirage Plus	48- 90159A46	Elite Series
15.75"	15	3	4600-6000	35-45	48- 19838A46	Mirage Plus	48- 19841A46	Elite Series
16"	13	3	5500+	25-38	48-826072A46	Mirage Plus		Elite Series

Verado 225 HP - Offshore / Bay / Flats Center Console (Single)

Engine RPM Range: 5800-6400 Gearcase Ratio: 1.85:1

Diameter	Pitch	No. of Blades	Boat Weight	Boat Speed	RH - Part Number	Description	LH - Part Number	Performance Category
16"	23	3	2500-2800	63-71	48-8M0040404	Enertia ECO	48-8M0040405	Comp Series
16"	22	3	2650-3000	60-68	48-8M0040408	Enertia ECO	48-8M0040409	Comp Series
16"	21	3	2800-3200	57-64	48-8M0040402	Enertia ECO	48-8M0040403	Comp Series
16"	20	3	2950-3400	54-61	48-8M0040406	Enertia ECO	48-8M0040407	Comp Series
16"	19	3	3100-3600	51-58	48-8M0040400	Enertia ECO	48-8M0040401	Comp Series
16"	18	3	3300-3850	48-55	48-8M0040396	Enertia ECO	48-8M0040397	Comp Series
16"	17	3	3500-4100	45-52	48-8M0040398	Enertia ECO	48-8M0040399	Comp Series
13.45"	22	3	2700-3100	60-68	48-899202A46	Enertia		Comp Series
13.63"	21	3	2800-3200	57-64	48-899002A46	Enertia	48-899003A46	Comp Series
13.80"	20	3	2950-3400	54-61	48-899000A46	Enertia		Comp Series
14.00"	19	3	3100-3600	51-58	48-898998A46	Enertia	48-898999A46	Comp Series
14.22"	18	3	3300-3850	48-55	48-898996A46	Enertia		Comp Series
14.45"	17	3	3500-4100	45-52	48-898994A46	Enertia	48-898994A46	Comp Series
14.72"	16	3	3800-4800	40-49	48-898992A46	Enertia		Comp Series
15.00"	15	3	4100-5500	35-45	48-898990A46	Enertia	48-898991A46	Comp Series
14.62"	25	4	2200-2500	69-78	48-857032A46	Revolution 4	48-857033A46	Comp Series
14.62"	23	4	2500-2800	63-71	48-857030A46	Revolution 4	48-857031A46	Comp Series
14.62"	21	4	2800-3200	57-64	48-857028A46	Revolution 4	48-857029A46	Comp Series
14.62"	20	4	2950-3400	54-61	48-8M0070052	Revolution 4	48-8M0070051	Comp Series
14.62"	19	4	3100-3600	51-58	48-857026A46	Revolution 4	48-857027A46	Comp Series
14.62"	17	4	3500-4100	45-52	48-857024A46	Revolution 4	48-857025A46	Comp Series
14.62"	15	4	4100-5500	35-45	48-857022A46	Revolution 4	48-8M0064449	Comp Series
14.50"	25	3	2200-2500	69-78	48- 13706A46	Mirage Plus	48- 13707A46	Elite Series
14.63"	23	3	2500-2800	63-71	48- 13704A46	Mirage Plus	48- 13705A46	Elite Series
14.75"	21	3	2800-3200	57-64	48- 13702A46	Mirage Plus	48- 13703A46	Elite Series
15.25"	19	3	3100-3600	51-58	48- 13700A46	Mirage Plus	48- 13701A46	Elite Series
15.5"	17	3	3500-4100	45-52	48- 18278A46	Mirage Plus	48- 90159A46	Elite Series
15.75"	15	3	4100-5500	35-45	48- 19838A46	Mirage Plus	48- 19841A46	Elite Series

Verado 200 HP – 4Cyl - Offshore / Bay / Flats Center Console (Single)

Engine RPM Range: 5800-6400 Gearcase Ratio: 1.85:1

Diameter	Pitch	No. of Blades	Boat Weight	Boat Speed	RH - Part Number	Description	LH - Part Number	Performance Category
16.00"	23	3	2600-3000	54-61	48-8M0040404	Enertia ECO	48-8M0040405	Comp Series
16.00"	22	3	2800-3200	51-58	48-8M0040408	Enertia ECO	48-8M0040409	Comp Series
16.00"	21	3	2900-3300	49-55	48-8M0040402	Enertia ECO	48-8M0040403	Comp Series
16.00"	20	3	3000-3600	46-53	48-8M0040406	Enertia ECO	48-8M0040407	Comp Series
16.00"	19	3	3300-3900	43-50	48-8M0040400	Enertia ECO	48-8M0040401	Comp Series
16.00"	18	3	3500-4300	39-47	48-8M0040396	Enertia ECO	48-8M0040397	Comp Series
16.00"	17	3	3800-4700	36-44	48-8M0040398	Enertia ECO	48-8M0040399	Comp Series
13.45"	22	3	2800-3200	51-58	48-899202A46	Enertia		Comp Series
13.63"	21	3	2900-3300	49-55	48-899002A46	Enertia	48-899003A46	Comp Series
13.80"	20	3	3000-3600	46-53	48-899000A46	Enertia		Comp Series
14.00"	19	3	3300-3900	43-50	48-898998A46	Enertia	48-898999A46	Comp Series
14.22"	18	3	3500-4300	39-47	48-898996A46	Enertia		Comp Series
14.45"	17	3	3800-4700	36-44	48-898994A46	Enertia	48-898994A46	Comp Series
14.72"	16	3	4100-5200	33-41	48-898992A46	Enertia		Comp Series
15.00"	15	3	4400-6000	29-38	48-898990A46	Enertia	48-898991A46	Comp Series
15.30"	14	3	4900-6800	26-35	48-898988A46	Enertia		Comp Series
14.50"	25	3	2300-2700	59-67	48- 13706A46	Mirage Plus	48- 13707A46	Elite Series
14.63"	23	3	2600-3000	54-61	48- 13704A46	Mirage Plus	48- 13705A46	Elite Series
15.25"	19	3	3300-3900	43-50	48- 13700A46	Mirage Plus	48- 13701A46	Elite Series
15.38"	18	3	3500-4300	39-47	48-889620A46	Mirage Plus	48-889619A46	Elite Series
15.5"	17	3	3800-4700	36-44	48- 18278A46	Mirage Plus	48- 90159A46	Elite Series
15.75"	15	3	3600-4400	29-38	48- 19838A46	Mirage Plus	48- 19841A46	Elite Series
16.00"	13	3	5400-8200	22-32	48-826072A46	Mirage Plus		Elite Series

150 HP FourStroke - Offshore / Bay / Flats Center Console (Single)

Engine RPM Range: 5000-5800 Gearcase Ratio: 1.92:1

Diameter	Pitch	No. of Blades	Boat Weight	Boat Speed	RH - Part Number	Description	LH - Part Number	Performance Category
13.50"	22	3	2100-2600	47-57	48-899202A46	Enertia		Comp Series
13.62"	21	3	2200-2800	44-54	48-899002A46	Enertia	48-899003A46	Comp Series
13.75"	20	3	2300-3000	42-52	48-899000A46	Enertia		Comp Series
14.00"	19	3	2500-3200	39-49	48-898998A46	Enertia	48-898999A46	Comp Series
14.25"	18	3	2700-3200	35-46	48-898996A46	Enertia		Comp Series
14.50"	17	3	2900-4000	32-43	48-898994A46	Enertia	48-898995A46	Comp Series
14.75"	16	3	3100-4500	29-40	48-898992A46	Enertia		Comp Series
15.00"	15	3	3400-5100	26-37	48-898990A46	Enertia	48-898991A46	Comp Series
15.13"	14	3	3800-6200	22-34	48-898988A46	Enertia		Comp Series
14.62"	25	3	1800-2200	55-65	48-825866A47	Tempest Plus		Elite Series
14.62"	24	3	1900-2300	53-62	48-825872A47	Tempest Plus		Elite Series
14.62"	23	3	2000-2400	50-60	48-825864A47	Tempest Plus		Elite Series
14.62"	22	3	2100-2600	47-57	48-8M8026820	Tempest Plus		Elite Series
14.62"	21	3	2200-2800	44-54	48-825862A47	Tempest Plus		Elite Series
14.62"	19	3	2500-3200	39-49	48-825860A47	Tempest Plus		Elite Series
14.62"	17	3	2900-4000	32-43	48-8M8026790	Tempest Plus		Elite Series

MERCURY PROPELLER RIGGING CHART

115 CT HP FourStroke - Offshore / Bay / Flats Center Console (Single)

Engine RPM Range: 5000-6000 Gearcase Ratio: 2.38:1

Diameter	Pitch	No. of Blades	Boat Weight	Boat Speed	RH - Part Number	Description	LH - Part Number	Performance Category
13.50”	22	3	2000-2800	35-47	48-899202A46	Enertia		Comp Series
13.80”	21	3	2100-3100	32-45	48-899002A46	Enertia	48-899003A46	Comp Series
13.75”	20	3	2300-3500	29-42	48-899000A46	Enertia		Comp Series
14.00”	19	3	2400-3700	27-40	48-898998A46	Enertia	48-898999A46	Comp Series
14.20”	18	3	2600-4300	24-37	48-898996A46	Enertia		Comp Series
14.50”	17	3	2800-5000	21-35	48-898994A46	Enertia	48-898995A46	Comp Series
14.70”	16	3	3100-5600	19-32	48-898992A46	Enertia		Comp Series
15.00”	15	3	3500-6700	16-29	48-898990A46	Enertia	48-898991A46	Comp Series
15.30”	14	3	3900-7800	14-26	48-898988A46	Enertia	48-8M0079504	Comp Series
15.60”	13	3	4300-10300	11-24	48-8M0070074	Enertia	48-8M0070076	Comp Series
16.00”	11	3	7000+	1-18	48-8M0070079	Enertia	48-8M0070077	Comp Series
14.62”	23	3	1900-2600	38-49	48-825864A47	Tempest Plus		Elite Series
14.62”	22	3	2000-2800	35-47	48-8M8026820	Tempest Plus		Elite Series
14.62”	21	3	2100-3100	32-45	48-825862A47	Tempest Plus		Elite Series
14.62”	19	3	2400-3700	27-40	48-825860A47	Tempest Plus		Elite Series
14.62”	17	3	2800-5000	21-35	48-8M8026790	Tempest Plus		Elite Series
14.00”	23	4	1900-2600	38-49	48-8M0084497	SpitFire		Elite Series
14.00”	21	4	2100-3100	32-45	48-8M0084496	SpitFire		Elite Series
14.00”	19	4	2400-3700	27-40	48-8M0084495	SpitFire		Elite Series
14.00”	17	4	2800-5000	21-35	48-8M0084494	SpitFire		Elite Series
14.00”	14	4	3900-7800	14-26	48-8M0084493	SpitFire		Elite Series
14.00”	12	4	7000+	1-24	48-8M0084491	SpitFire		Elite Series
14.50”	19	3	2400-3700	27-40	48-832830A45	Black Max		Sport Series
15.00”	17	3	2800-5000	21-35	48-832828A45	Black Max		Sport Series
15.25”	15	3	3500-6700	16-29	48- 78116A45	Black Max		Sport Series
16.00”	13	3	4300-10300	11-24	48- 78114A45	Black Max		Sport Series
16.00”	12	3	5000+	9-21	48- 16436A45	Black Max		Sport Series
16.00”	11	3	7000+	1-18	48- 78112A45	Black Max	48- 78117A40	Sport Series

115 STD HP FourStroke - Offshore / Bay / Flats Center Console

Engine RPM Range: 5000-6000 Gearcase Ratio: 2.07:1

Diameter	Pitch	No. of Blades	Boat Weight	Boat Speed	RH - Part Number	Description	Performance Category
12.7"	21	4	1800-2400	40-52	48-8M0055551	SpitFire X7	Elite Series
12.7"	19	4	2000-2900	34-47	48-8M0055550	SpitFire X7	Elite Series
13.0"	17	4	2300-3600	28-41	48-8M0055549	SpitFire X7	Elite Series
13.5"	15	4	2800-4700	22-35	48-8M0055548	SpitFire X7	Elite Series
14.0"	13	4	3500-6700	16-29	48-8M0055547	SpitFire X7	Elite Series
13”	18	3	2200-3200	31-44	48- 16988A46	Vengeance	Sport Series
13.13”	16	3	2500-4100	25-38	48- 16986A46	Vengeance	Sport Series
13.25”	15	3	2800-4700	22-35	48-854354A46	Vengeance	Sport Series
13.38”	14	3	3100-5600	19-32	48- 17314A46	Vengeance	Sport Series
14”	12	3	3900-8500	13-26	48- 17312A46	Vengeance	Sport Series
12.8”	19	4	2000-2900	34-47	48-8M8026600	SpitFire	Elite Series
12.8”	17	4	2300-3600	28-41	48-8M8026590	SpitFire	Elite Series
12.8”	15	4	2800-4700	22-35	48-8M8026580	SpitFire	Elite Series
13.8”	13	4	3500-6700	16-29	48-8M8026570	SpitFire	Elite Series
13.8”	11	4	4500-11500	10-23	48-8M8026560	SpitFire	Elite Series
12.5”	23	3	1600-2100	45-57	48- 77350A45	Black Max	Sport Series
12.75”	21	3	1800-2400	40-52	48- 77348A45	Black Max	Sport Series
13”	19	3	2000-2900	34-47	48- 77346A45	Black Max	Sport Series
13.25”	17	3	2300-3600	28-41	48- 77344A45	Black Max	Sport Series

Diameter	Pitch	No. of Blades	Boat Weight	Boat Speed	RH - Part Number	Description	Performance Category
13.25"	16	3	2500-4100	25-38	48-854360A45	Black Max	Sport Series
13.75"	15	3	2800-4700	22-35	48- 77342A45	Black Max	Sport Series
13.88"	14	3	3100-5600	19-32	48-854352A45	Black Max	Sport Series
14"	13	3	3500-6700	16-29	48- 77340A45	Black Max	Sport Series
14"	11	3	4700+	1-23	48- 77338A45	Black Max	Sport Series

90 CT HP FourStroke - Offshore / Bay / Flats Center Console

Engine RPM Range: 5000-6000 Gearcase Ratio: 2.38:1

Diameter	Pitch	No. of Blades	Boat Weight	Boat Speed	RH - Part Number	Description	Performance Category
13.50"	22	3	1600-2200	35-47	48-899202A46	Enertia	Comp Series
13.80"	21	3	1600-2400	32-45	48-899002A46	Enertia	Comp Series
13.75"	20	3	1800-2700	29-42	48-899000A46	Enertia	Comp Series
14.00"	19	3	1900-2900	27-40	48-898998A46	Enertia	Comp Series
14.20"	18	3	2100-3300	24-37	48-898996A46	Enertia	Comp Series
14.50"	17	3	2200-3900	21-35	48-898994A46	Enertia	Comp Series
14.70"	16	3	2400-4400	19-32	48-898992A46	Enertia	Comp Series
15.00"	15	3	2700-5300	16-29	48-898990A46	Enertia	Comp Series
15.30"	14	3	3100-6100	14-26	48-898988A46	Enertia	Comp Series
14.62"	23	3	1500-1900	38-49	48-825864A47	Tempest Plus	Elite Series
14.62"	22	3	1600-2200	35-47	48-8M8026820	Tempest Plus	Elite Series
14.62"	21	3	1600-2400	32-45	48-825862A47	Tempest Plus	Elite Series
14.62"	19	3	1900-2900	27-40	48-825860A47	Tempest Plus	Elite Series
14.62"	17	3	2200-3900	21-35	48-8M8026790	Tempest Plus	Elite Series
13.75"	21	3	1600-2400	32-45	48- 16318A46	Vengeance	Sport Series
14.00"	19	3	1900-2900	27-40	48- 16316A46	Vengeance	Sport Series
14.50"	17	3	2200-3900	21-35	48- 16314A46	Vengeance	Sport Series
14.00"	23	4	1500-1900	38-49	48-8M0084497	SpitFire	Elite Series
14.00"	21	4	1600-2400	32-45	48-8M0084496	SpitFire	Elite Series
14.00"	19	4	1900-2900	27-40	48-8M0084495	SpitFire	Elite Series
14.00"	17	4	2200-3900	21-35	48-8M0084494	SpitFire	Elite Series
14.00"	23	3	1500-1900	38-49	48-832834A45	Black Max	Sport Series
14.25"	21	3	1600-2400	32-45	48-832832A45	Black Max	Sport Series
14.50"	19	3	1900-2900	27-40	48-832830A45	Black Max	Sport Series
15.00"	17	3	2200-3900	21-35	48-832828A45	Black Max	Sport Series
15.25"	15	3	2700-5300	16-29	48- 78116A45	Black Max	Sport Series

90 STD HP FourStroke - Bay / Flats Center Console

Engine RPM Range: 5000-6000 Gearcase Ratio: 2.07:1

Diameter	Pitch	No. of Blades	Boat Weight	Boat Speed	RH - Part Number	Description	Performance Category
12.7"	21	4	1400-1900	40-52	48-8M0055551	SpitFire X7	Elite Series
12.7"	19	4	1600-2300	34-47	48-8M0055550	SpitFire X7	Elite Series
13.0"	17	4	1800-2800	28-41	48-8M0055549	SpitFire X7	Elite Series
13.5"	15	4	2200-3700	22-35	48-8M0055548	SpitFire X7	Elite Series
13"	18	3	4000+	31-44	48- 16988A46	Vengeance	Sport Series
13.13"	16	3	2000-3200	25-38	48- 16986A46	Vengeance	Sport Series
13.25"	15	3	2200-3700	22-35	48-854354A46	Vengeance	Sport Series
13.38"	14	3	2400-4400	19-32	48- 17314A46	Vengeance	Sport Series
14"	12	3	2700-5300	13-26	48- 17312A46	Vengeance	Sport Series
12.8"	19	4	1600-2300	34-47	48-8M8026600	SpitFire	Elite Series
12.8"	17	4	1800-2800	28-41	48-8M8026590	SpitFire	Elite Series
12.8"	15	4	2200-3700	22-35	48-8M8026580	SpitFire	Elite Series
13.8"	13	4	2700-5300	16-29	48-8M8026570	SpitFire	Elite Series

MERCURY PROPELLER RIGGING CHART

Diameter	Pitch	No. of Blades	Boat Weight	Boat Speed	RH - Part Number	Description	Performance Category
13.8"	11	4	4000+	10-23	48-8M8026560	SpitFire	Elite Series
12.5"	23	3	1300-1600	45-57	48- 77350A45	Black Max	Sport Series
12.75"	21	3	1400-1900	40-52	48- 77348A45	Black Max	Sport Series
13"	19	3	1600-2300	34-47	48- 77346A45	Black Max	Sport Series
13.25"	17	3	1800-2800	28-41	48- 77344A45	Black Max	Sport Series
13.25"	16	3	2000-3200	25-38	48-854360A45	Black Max	Sport Series
13.75"	15	3	2200-3700	22-35	48- 77342A45	Black Max	Sport Series
13.88"	14	3	2400-4400	19-32	48-854352A45	Black Max	Sport Series
14"	13	3	2700-5300	16-29	48- 77340A45	Black Max	Sport Series
14"	11	3	4000+	1-22	48- 77338A45	Black Max	Sport Series

75 STD HP FourStroke - Bay / Flats Center Console

Engine RPM Range: 5000-6000 Gearcase Ratio: 2.07:1

Diameter	Pitch	No. of Blades	Boat Weight	Boat Speed	RH - Part Number	Description	Performance Category
12.7"	21	4	1300-1900	34-47	48-8M0055551	SpitFire X7	Elite Series
12.7"	19	4	1500-2300	29-42	48-8M0055550	SpitFire X7	Elite Series
13.0"	17	4	1700-2900	23-37	48-8M0055549	SpitFire X7	Elite Series
13.5"	15	4	2100-3900	18-31	48-8M0055548	SpitFire X7	Elite Series
13"	18	3	1600-2500	26-40	48- 16988A46	Vengeance	Sport Series
13.13"	16	3	1900-3400	20-34	48- 16986A46	Vengeance	Sport Series
13.25"	15	3	2100-3900	18-31	48-854354A46	Vengeance	Sport Series
13.38"	14	3	2300-4700	15-28	48- 17314A46	Vengeance	Sport Series
14"	12	3	2900-7500	10-23	48- 17312A46	Vengeance	Sport Series
12.8"	19	4	1500-2300	29-42	48-8M8026600	SpitFire	Elite Series
12.8"	17	4	1700-2900	23-37	48-8M8026590	SpitFire	Elite Series
12.8"	15	4	2100-3900	18-31	48-8M8026580	SpitFire	Elite Series
13.8"	13	4	2500-6100	12-26	48-8M8026570	SpitFire	Elite Series
13.8"	11	4	3800+	7-20	48-8M8026560	SpitFire	Elite Series
12.5"	23	3	1200-1600	39-52	48- 77350A45	Black Max	Sport Series
12.75"	21	3	1300-1900	34-47	48- 77348A45	Black Max	Sport Series
13"	19	3	1500-2300	29-42	48- 77346A45	Black Max	Sport Series
13.25"	17	3	1700-2900	23-37	48- 77344A45	Black Max	Sport Series
13.25"	16	3	1900-3400	20-34	48-854360A45	Black Max	Sport Series
13.75"	15	3	2100-3900	18-31	48- 77342A45	Black Max	Sport Series
13.88"	14	3	2300-4700	15-28	48-854352A45	Black Max	Sport Series
14"	13	3	2500-6100	12-26	48- 77340A45	Black Max	Sport Series
14"	11	3	3800+	1-20	48- 77338A45	Black Max	Sport Series

60 CT HP FourStroke – Bay / Flats Center Console

Engine RPM Range: 5500-6000 Gearcase Ratio: 2.33:1

Diameter	Pitch	No of Blades	Boat Weight	Boat Speed	RH Part Number	Propeller Name	Performance Series
13.0"	17	4	1400-1800	34-38	48-8M0055549	SpitFire X7	Elite Series
13.5"	15	4	1700-2300	28-34	48-8M0055548	SpitFire X7	Elite Series
14.0"	13	4	2000-3300	23-30	48-8M0055547	SpitFire X7	Elite Series
12.8"	17	4	1400-1800	34-38	48-8M8026590	SpitFire	Elite Series
12.8"	15	4	1700-2300	28-34	48-8M8026580	SpitFire	Elite Series
13.8"	13	4	2000-3300	23-30	48-8M8026570	SpitFire	Elite Series
13.8"	11	4	2700-5400	18-25	48-8M8026560	SpitFire	Elite Series
13.25"	17	3	1400-1800	34-38	48- 77344A45	Black Max	Sport Series
13.25"	16	3	1500-2000	30-36	48-854360A45	Black Max	Sport Series
13.75"	15	3	1700-2300	28-34	48- 77342A45	Black Max	Sport Series
13.88"	14	3	1800-2700	26-32	48-854352A45	Black Max	Sport Series

Diameter	Pitch	No of Blades	Boat Weight	Boat Speed	RH Part Number	Propeller Name	Performance Series
14"	13	3	2000-3300	23-30	48- 77340A45	Black Max	Sport Series
14"	11	3	2700-5400	18-25	48- 77338A45	Black Max	Sport Series

60 STD HP FourStroke - Bay / Flats Center Console

Engine RPM Range: 5500-6000 Gearcase Ratio: 1.83:1

Diameter	Pitch	No. of Blades	Boat Weight	Boat Speed	RH - Part Number	Description	Performance Category
10.6	14	4	1300-1700	16-30	48-878616A46	Trophy Sport	Elite Series
10.6	13	4	1500-2000	17-26	48-878614A46	Trophy Sport	Elite Series
10.6	12	4	1700-2500	19-22	48-878612A46	Trophy Sport	Elite Series
10.25	15	3	1200-1600	15-33	48-855862A46	Vengeance	Sport Series
10.4	14	3	1300-1700	16-30	48-855860A46	Vengeance	Sport Series
10.5	13	3	1500-2000	17-26	48-855858A46	Vengeance	Sport Series
11	12	3	1700-2500	19-22	48-855856A46	Vengeance	Sport Series
11.6	11	3	2000-3100	21-18	48-823478A46	Vengeance	Sport Series
12.25	9	3	2700-5400	25-11	48- 97868A46	Vengeance	Sport Series
10.1	15	4	1200-1600	15-33	48-8M8026640	SpitFire	Elite Series
10.1	14	4	1300-1700	16-30	48-8M8026635	SpitFire	Elite Series
10.3	13	4	1500-2000	17-26	48-8M8026630	SpitFire	Elite Series
10.6	12	4	1700-2500	19-22	48-8M8026625	SpitFire	Elite Series
10	19	3	900-1000	11-47	48- 73146A45	Black Max	Sport Series
10	17	3	1000-1300	13-40	48- 73144A45	Black Max	Sport Series
10	16	3	1100-1400	14-37	48- 73142A45	Black Max	Sport Series
10.1	15	3	1200-1600	15-33	48- 73140A45	Black Max	Sport Series
10.25	14	3	1300-1700	16-30	48- 73138A45	Black Max	Sport Series
10.4	13	3	1500-2000	17-26	48- 73136A45	Black Max	Sport Series
10.6	12	3	1700-2500	19-22	48- 73134A45	Black Max	Sport Series
10.8	11	3	2000-3100	21-18	48- 85632A45	Black Max	Sport Series
12	10.5	3	2100-3500	22-16	48- 42740A45	Black Max	Sport Series
11.25	10	3	2200-4100	23-14	48- 73132A45	Black Max	Sport Series
12.25	9	3	2700-5400	25-11	48- 87818A45	Black Max	Sport Series
12.5	8	3	3500-8900	29-7	48- 42738A45	Black Max	Sport Series

50 CT HP FourStroke – Bay / Flats Center Console

Engine RPM Range: 5500-6000 Gearcase Ratio: 2.33:1

Diameter	Pitch	No of Blades	Boat Weight	Boat Speed	RH Part Number	Propeller Name	Performance Series
13.5"	15	4	1400-2000	28-34	48-8M0055548	SpitFire X7	Elite Series
14.0"	13	4	1700-2700	23-30	48-8M0055547	SpitFire X7	Elite Series
12.8"	15	4	1400-2000	28-34	48-8M8026580	SpitFire	Elite Series
13.8"	13	4	1700-2700	23-30	48-8M8026570	SpitFire	Elite Series
13.8"	11	4	2300-4500	18-25	48-8M8026560	SpitFire	Elite Series
13.25"	16	3	1300-1700	30-36	48-854360A45	Black Max	Sport Series
13.75"	15	3	1400-2000	28-34	48- 77342A45	Black Max	Sport Series
13.88"	14	3	1500-2300	26-32	48-854352A45	Black Max	Sport Series
14"	13	3	1700-2700	23-30	48- 77340A45	Black Max	Sport Series
14"	11	3	2300-4500	18-25	48- 77338A45	Black Max	Sport Series

MERCURY PROPELLER RIGGING CHART

50 STD HP FourStroke - Bay / Flats Center Console

Engine RPM Range: 5500-6000 Gearcase Ratio: 1.83:1

Diameter	Pitch	No. of Blades	Boat Weight	Boat Speed	RH - Part Number	Description	Performance Category
10.6	14	4	1100-1400	30-38	48-878616A46	Trophy Sport	Elite Series
10.6	13	4	1300-1700	26-34	48-878614A46	Trophy Sport	Elite Series
10.6	12	4	1400-2100	22-31	48-878612A46	Trophy Sport	Elite Series
10.25	15	3	1000-1300	33-41	48-855862A46	Vengeance	Sport Series
10.4	14	3	1100-1400	30-38	48-855860A46	Vengeance	Sport Series
10.5	13	3	1300-1700	26-34	48-855858A46	Vengeance	Sport Series
11	12	3	1400-2100	22-31	48-855856A46	Vengeance	Sport Series
11.6	11	3	1600-2600	18-27	48-823478A46	Vengeance	Sport Series
12.25	9	3	2300-4500	11-20	48- 97868A46	Vengeance	Sport Series
10.1	15	4	1000-1300	33-41	48-8M8026640	SpitFire	Elite Series
10.1	14	4	1100-1400	30-38	48-8M8026635	SpitFire	Elite Series
10.3	13	4	1300-1700	26-34	48-8M8026630	SpitFire	Elite Series
10.6	12	4	1400-2100	22-31	48-8M8026625	SpitFire	Elite Series
10	19	3	800-900	47-53	48- 73146A45	Black Max	Sport Series
10	17	3	900-1000	40-47	48- 73144A45	Black Max	Sport Series
10	16	3	900-1100	37-44	48- 73142A45	Black Max	Sport Series
10.1	15	3	1000-1300	33-41	48- 73140A45	Black Max	Sport Series
10.25	14	3	1100-1400	30-38	48- 73138A45	Black Max	Sport Series
10.4	13	3	1300-1700	26-34	48- 73136A45	Black Max	Sport Series
10.6	12	3	1400-2100	22-31	48- 73134A45	Black Max	Sport Series
10.8	11	3	1600-2600	18-27	48- 85632A45	Black Max	Sport Series
12	10.5	3	1800-2900	16-25	48- 42740A45	Black Max	Sport Series
11.25	10	3	1900-3400	14-24	48- 73132A45	Black Max	Sport Series
12.25	9	3	2300-4500	11-20	48- 87818A45	Black Max	Sport Series
12.5	8	3	2900-7400	7-16	48- 42738A45	Black Max	Sport Series

40 CT HP FourStroke – Bay / Flats Center Console

Engine RPM Range: 5500-6000 Gearcase Ratio: 2.33:1

Diameter	Pitch	No of Blades	Boat Weight	Boat Speed	RH Part Number	Propeller Name	Performance Series
13.5"	15	4	1100-1600	28-34	48-8M0055548	SpitFire X7	Elite Series
14.0"	13	4	1400-2200	23-30	48-8M0055547	SpitFire X7	Elite Series
12.8"	15	4	1100-1600	28-34	48-8M8026580	SpitFire	Elite Series
13.8"	13	4	1400-2200	23-30	48-8M8026570	SpitFire	Elite Series
13.8"	11	4	1800-3600	18-25	48-8M8026560	SpitFire	Elite Series
13.75"	15	3	1100-1600	28-34	48- 77342A45	Black Max	Sport Series
13.88"	14	3	1200-1800	26-32	48-854352A45	Black Max	Sport Series
14"	13	3	1400-2200	23-30	48- 77340A45	Black Max	Sport Series
14"	11	3	1800-3600	18-25	48- 77338A45	Black Max	Sport Series

40 STD HP FourStroke – Bay / Flats Center Console

Engine RPM Range: 5500-6000 Gearcase Ratio: 2.00:1

Diameter	Pitch	No. of Blades	Boat Weight	Boat Speed	RH - Part Number	Description	Performance Category
10.6	14	4	1000-1400	25-34	48-878616A46	Trophy Sport	Elite Series
10.6	13	4	1200-1600	22-30	48-878614A46	Trophy Sport	Elite Series
10.6	12	4	1300-2100	18-27	48-878612A46	Trophy Sport	Elite Series
10.25	15	3	900-1200	29-37	48-855862A46	Vengeance	Sport Series
10.4	14	3	1000-1400	25-34	48-855860A46	Vengeance	Sport Series
10.5	13	3	1200-1600	22-30	48-855858A46	Vengeance	Sport Series
11	12	3	1300-2100	18-27	48-855856A46	Vengeance	Sport Series
11.6	11	3	1500-2500	15-24	48-823478A46	Vengeance	Sport Series
12.25	9	3	2200-5100	8-17	48- 97868A46	Vengeance	Sport Series

Diameter	Pitch	No. of Blades	Boat Weight	Boat Speed	RH - Part Number	Description	Performance Category
10.1	15	4	900-1200	29-37	48-8M8026640	SpitFire	Elite Series
10.1	14	4	1000-1400	25-34	48-8M8026635	SpitFire	Elite Series
10.3	13	4	1200-1600	22-30	48-8M8026630	SpitFire	Elite Series
10.6	12	4	1300-2100	18-27	48-8M8026625	SpitFire	Elite Series
10	19	3	700-800	42-48	48- 73146A45	Black Max	Sport Series
10	17	3	800-1000	35-43	48- 73144A45	Black Max	Sport Series
10	16	3	800-1100	32-40	48- 73142A45	Black Max	Sport Series
10.1	15	3	900-1200	29-37	48- 73140A45	Black Max	Sport Series
10.25	14	3	1000-1400	25-34	48- 73138A45	Black Max	Sport Series
10.4	13	3	1200-1600	22-30	48- 73136A45	Black Max	Sport Series
10.6	12	3	1300-2100	18-27	48- 73134A45	Black Max	Sport Series
10.8	11	3	1500-2500	15-24	48- 85632A45	Black Max	Sport Series
12	10.5	3	1600-3000	13-22	48- 42740A45	Black Max	Sport Series
11.25	10	3	1800-3600	11-20	48- 73132A45	Black Max	Sport Series
12.25	9	3	2200-5100	8-17	48- 87818A45	Black Max	Sport Series
12.5	8	3	2700-8700	5-14	48- 42738A45	Black Max	Sport Series

MERCURY PROPELLER APPLICATION CHARTS

MERCURY OUTBOARD APPLICATION CHARTS

Mercury/Mariner Thruster Electric Fishing Motors

Diameter	Pitch	Material	Blades	LH Rotation	RH Rotation	Model	Application
11	4	Plastic	2		N/A	Black Machete	MotorGuide
11	5	Plastic	2	48-813730A 3	N/A	Clear Machete	R33, RX33, T33, R45, RL45, RX45, T45
9 1/4	3	Plastic	2	48- 18428A 5	N/A	Clear Machete	Direct Drive
10	3 1/2	Plastic	2	48-MAF12406T	N/A	Clear Machete	MotorGuide

Mercury/Mariner 2.5 - 3.5 Hp Outboard

2.5 and 3.3 Hp 2-Stroke
2.5 and 3.5 HP 4-Storke 2007 and Newer
Pin Drive
Shear Pin for Plastic 17-815111
Shear Pin for Aluminum 17-815111-1
Cotter Pin 18-95295

Diameter	Pitch	Material	Blades	RH Rotation	Model
7 3/8	6	Plastic	3	48-815083A01(1)	Black Max
7 3/8	7	Plastic	3	48-815083A02	Black Max

(1) Standard with 2.5 HP (2 and 4-Stroke), 3.5 HP 4-Stroke and 3.3 HP 2-Stroke (Non-Shift)

Mercury/Mariner 4 - 6 Hp Outboard

4-6 Hp (4-Stroke) 1999 & Newer
4 & 5 Hp (2-Stroke) 1987 & Newer
12 Tooth Spline
Thrust Washer 16145 1
Aft Prop Washer 12-16146
Prop Nut 11-16147
Cotter Pin 18-815026

Diameter	Pitch	Material	Blades	LH Rotation	RH Rotation	Model
7.8	8	Alum	3	N/A	48-812950A02(2)	Black Max
7.8	7	Alum	3	N/A	48-812949A02	Black Max
8.4	6	Alum	3	N/A	48-812951A02(1)	Black Max High Thrust Sail

(1) Standard with 4 HP & 4 HP Four Stroke

(2) Standard with 5 HP Four Stroke and 6 HP Four Stroke

Mercury/Mariner 8/9.9 Hp (4-Stroke) Outboard

8/9.9 (4-Stroke) Model Year 2005 and newer
12 Tooth Spline
Standard Gearcase Only
Forward Thrust Washer (Std. gearcase) 803743002
Aft Washer (Std. gearcase) 12-16146
Prop Nut 11-16147
Flo-Torq I Round Rubber Hub 897453T
Cotter Pin 18-815026

Diameter	Pitch	Material	Blades	LH Rotation	RH Rotation	Model
8.7	5	Alum	4	N/A	48-812954A10	Std. Gearcase Black Max
8.9	6.5	Alum	3	N/A	48-897610A10	Std. Gearcase Black Max
8.9	7.5	Alum	3	N/A	48-897614A10(1)	Std. Gearcase Black Max
8.9	8.5	Alum	3	N/A	48-897618A10(2)	Std. Gearcase Black Max

(1) Standard with 8 Hp.

(2) Standard with 9.9 Hp.

Mercury/Mariner 6 - 15 Hp Outboard

6 - 8 - 9.9 & 15 HP (2-Stroke)
9.9 (4-Stroke) 1995-2004
15 (4-Stroke) thru 2007
SeaPro/Marathon 10-15 HP
8 Tooth Spline
Flo-Torq I Round Rubber Hub = 827598T
Prop Nut Kit 11-13914A 2

Diameter	Pitch	Material	Blades	LH Rotation	RH Rotation	Model
9	10 1/2	Alum	3	N/A	48-828158A12	Black Max
9	9	Alum	3	N/A	48-828156A12(1)	Black Max
9	8	Alum	3	N/A	48-828154A12	Black Max
9 1/4	7	Alum	3	N/A	48-828152A12	Black Max
9 3/4	6 1/2	Alum	3	N/A	48-828150A12	Black Max
9 3/4	5 1/2	Alum	3	N/A		Black Max

(1) Standard with 6 - 8 - 9.9 - 15 HP 2-Strokes and SeaPro/Marathon 10 - 15HP

Mercury/Mariner 9.9 - 25 Hp Outboard

9.9 & 15 (4-Stroke) Bigfoot 1999-2004
20 & 25 Hp (2-Stroke) Classic 1980-2006
SeaPro/Marathon 25 HP
10 Tooth Spline
Prop Nut 11-88228
Forward Thrust Washer 858498
Prop Nut 11-40119-12
Flo-Torq I Round Rubber Hub = 19669T
Forward Thrust Washer 858498

Diameter	Pitch	Material	Blades	LH Rotation	RH Rotation	Model
10 3/8	13	Alum	3	N/A	48- 19640A40(1)	Black Max
10 3/8	12	Alum	3	N/A	48- 19639A40	Black Max
10 3/8	11	Alum	3	N/A	48- 19638A40(3)	Black Max
10 3/8	9 1/2	Alum	3	N/A	48- 19636A10(2)	Black Max
10 3/8	13	SS	3	N/A	48- 19644A 5	Vengeance

(1) Standard with 20-25 HP

(2) Standard with 9.9 & 15 HP Bigfoot Four Stroke (1999-2004)

(3) Standard with SeaPro/Marathon 25 HP

Mercury/Mariner 9.9 - 20 HP (4-Stroke) Outboards

9.9 HP Bigfoot/Command Thrust (CT) Model Year 2005 and newer
9.9HP Pro Kicker
15/20 HP 2008 and newer
14 Tooth Spline
Forward Thrust Washer 803743
Aft Washer 12-16140 2
Prop Nut 11-16147 1
Flo-Torq I Rubber Hub 8M0054769
Cotter Pin 18-815026 4

Diameter	Pitch	Material	Blades	LH Rotation	RH Rotation	Model
10	7	Alum	4	N/A	48-812950A10	Black Max(1)
10	7	Alum	4	N/A	48-812948A10	Black Max(2)
9.5	8	Alum	3	N/A	48-897748A11	Black Max
9.25	9	Alum	3	N/A	48-897750A11	Black Max(3)
9.25	10	Alum	3	N/A	48-897752A11	Black Max(4)
9.25	11.5	Alum	3	N/A	48-897754A11	Black Max

(1) Standard with 9.9 Bigfoot / Command Thrust (CT)

(2) Standard with 9.9 Pro Kicker. Painted Silver.

(3) Standard with 15 HP 4-Stroke

(4) Standard with 20 HP 4-Stroke

Mercury/Mariner 25/30 Hp (4-Stroke) Outboard

25/30 HP (4-Stroke) Model Year 2006 and newer
10 Tooth Spline
Standard Gearcase Only
Forward Thrust Washer 161452
Cotter Pin 18-815026
Aft Washer 12-16140-2
Flo-Torq I Rubber Hub 897001T
Prop Nut 11-161471

Diameter	Pitch	Material	Blades	LH Rotation	RH Rotation	Model
10	8	Alum	3	N/A	48-896890A10	Black Max
9.75	9 1/2	Alum	3	N/A	48-896892A40	Black Max
9.5	11	Alum	3	N/A	48-896896A40	Black Max
9.25	12 1/2	Alum	3	N/A	48-896900A40	Black Max
9.3	9.5	Alum	4	N/A	48-8M8026650	Spitfire
9.3	11	Alum	4	N/A	48-8M8026655	Spitfire
9.8	9.5	SS	3	N/A	48-899818A05	Vengeance
9.5	11	SS	3	N/A	48-899820A05	Vengeance

Mercury/Mariner 25 HP Bigfoot/Command Thrust -60 Hp Outboard

25 HP Bigfoot/Command Thrust (CT)(4-Stroke)
30 HP 2-Stroke
30 HP BigFoot/Command Thrust (CT) 2010 and Newer
30-40 HP SeaPro/Marathon
30 (4-Stroke) 1994-2005
40-60 Hp 2-Stroke and 4-Stroke (Not Bigfoot/CT) 1977 and Newer
Sea Pro/Marathon 55 Hp
13 Tooth Spline
Flo-Torq Reflex Hub Kit Included with propeller
Hub Kit Part Number: 835257Q12
Reflex Sleeve Part Number: 8M0047148
For older rubber hub propellers - use Mercury hardware kit 11-31990Q02. Purchase separately.
Propeller hardware is not compatible between rubber hub propellers and Flo-Torq Reflex propellers.

Diameter	Pitch	Material	Blades	LH Rotation	RH Rotation	Model
10	17	Alum	3	N/A	48- 73144A45	Black Max
10	16	Alum	3	N/A	48- 73142A45	Black Max
10 1/8	15	Alum	3	N/A	48- 73140A45	Black Max
10 1/4	14	Alum	3	N/A	48- 73138A45	Black Max
10 3/8	14	Alum	3	N/A	48-816706A45(1)	Black Max
10 1/2	13	Alum	3	N/A	48-816704A45(1)	Black Max
10 3/8	13	Alum	3	N/A	48- 73136A45	Black Max
10 5/8	12	Alum	3	N/A	48- 73134A45	Black Max
10 3/4	12	Alum	3	N/A	48-816702A45(1)	Black Max
10 7/8	11	Alum	3	N/A	48- 85632A45	Black Max
12	10 1/2	Alum	3	N/A	48- 42740A45(1)	Black Max
11 5/8	10 1/2	Alum	3	N/A	48-827312A45	Black Max
11 1/4	10	Alum	3	N/A	48- 73132A45	Black Max
12 1/4	9	Alum	3	N/A	48- 87818A45	Black Max
12 1/2	8	Alum	3	N/A	48- 42738A45(1)	Black Max
12 1/2	8	Alum	3	N/A	48- 42738CP1(1)(3)	Black Max XC
10.1	15	Alum	4	N/A	48-8M8026640	Spitfire
10.1	14	Alum	4	N/A	48-8M8026635	Spitfire
10.3	13	Alum	4	N/A	48-8M8026630	Spitfire
10.6	12	Alum	4	N/A	48-8M8026625	Spitfire
10 1/4	15	SS	3	N/A	48-855862A46	Vengeance
10 3/8	14	SS	3	N/A	48-855860A46	Vengeance
10 1/2	13	SS	3	N/A	48-855858A46	Vengeance

Diameter	Pitch	Material	Blades	LH Rotation	RH Rotation	Model
11	12	SS	3	N/A	48-855856A46	Vengeance
11 5/8	11	SS	3	N/A	48-823478A46	Vengeance
10 5/8	14	SS	4	N/A	48-878616A46	Trophy Sport
10 5/8	13	SS	4	N/A	48-878614A46	Trophy Sport
10 5/8	12	SS	4	N/A	48-878612A46	Trophy Sport

(1) Large Blade Area

(3) Extra Cup for superior performance and holding on pontoon boats

Mercury/Mariner 40-50 HP 2-Stroke Mercury/Mariner (Japan) 1997 and newer

40 HP 2-Stroke Mercury/Mariner (Japan) 1997 and newer
Flo-Torq Reflex Hub Kit Included with propeller
Hub Kit Part Number: 8M0113363
Reflex Sleeve Part Number: 8M0047148
Reflex Hardware: 8M0053074

Diameter	Pitch	Material	Blades	LH Rotation	RH Rotation	Model
10 5/8	12	Alum	3	N/A	48-8M0113416	Black Max

Mercury/Mariner 40 Bigfoot/Command Thrust - 125 HP

40-60HP Bigfoot/Command Thrust (CT) All Years
75-125HP 1978 and newer
15 Tooth Spline
Note: Flo-Torq III Hub Kit 835257K 9 is recommended for 40-60HP Bigfoot/Command Thrust (CT) and 75-115HP Optimax to reduce clutch rattle.

Diameter	Pitch	Material	Blades	LH Rotation	RH Rotation	Model
12 1/2	23	Alum	3	N/A	48- 77350A45	Black Max
12 3/4	21	Alum	3	N/A	48- 77348A45	Black Max
13	19	Alum	3	N/A	48- 77346A45	Black Max
13 1/4	17	Alum	3	N/A	48- 77344A45	Black Max
13 1/4	16	Alum	3	N/A	48-854360A45	Black Max
13 3/4	15	Alum	3	N/A	48- 77342A45	Black Max
13 7/8	14	Alum	3	N/A	48-854352A45	Black Max
14	13	Alum	3	N/A	48- 77340A45	Black Max
14	13	Alum	3	N/A	48- 77340CP1	Black Max XC(2)
14	11	Alum	3	N/A	48- 77338A45	Black Max
14	11	Alum	3	N/A	48- 77338CP1	Black Max XC(2)
14	10	Alum	3	N/A	48-854342A45	Black Max
14	10	Alum	3	N/A	48-854342CP1	Black Max XC(2)
14	9	Alum	3	N/A	48-854340A45	Black Max
13 3/4	15	Alum	3	N/A	48- 77342A33	Black Max(3)
14	13	Alum	3	N/A	48- 77340A33	Black Max(3)
14	11	Alum	3	N/A	48- 77338A33	Black Max(3)
14	10	Alum	3	N/A	48-854342A33	Black Max(3)
14	9	Alum	3	N/A	48-854340A33	Black Max(3)
12.8	19	Alum	4	N/A	48-8M8026600	Spitfire
12.8	17	Alum	4	N/A	48-8M8026590	Spitfire
12.8	15	Alum	4	N/A	48-8M8026580	Spitfire
13.8	13	Alum	4	N/A	48-8M8026570	Spitfire Pontoon(2)
13.8	11	Alum	4	N/A	48-8M8026560	Spitfire Pontoon(2)
13.8	10	Alum	4	N/A	48-8M8026555	Spitfire Pontoon(2)
12.7	21	SS	4	N/A	48-8M0055551	Spitfire X7(1)
12.7	19	SS	4	N/A	48-8M0055550	Spitfire X7(1)
13.0	17	SS	4	N/A	48-8M0055549	Spitfire X7(1)
13.5	15	SS	4	N/A	48-8M0055548	Spitfire X7(1)

Diameter	Pitch	Material	Blades	LH Rotation	RH Rotation	Model
14.0	13	SS	4	N/A	48-8M0055547	Spitfire X7(1)
13	18	SS	3	N/A	48- 16988A46	Vengeance
13 1/8	16	SS	3	N/A	48- 16986A46	Vengeance
13 1/4	15	SS	3	N/A	48-854354A46	Vengeance
13 3/8	14	SS	3	N/A	48- 17314A46	Vengeance
14	12	SS	3	N/A	48- 17312A46	Vengeance
14	12	SS	3	N/A	48-8M0113150	Vengeance with FT3
14	10	SS	3	N/A	48- 17310A46	Vengeance
13 1/2	22	SS	3	N/A	48- 16992A46	Laser II(1)
13 1/4	19	SS	3	N/A	48-899004A46	Laser II(1)
13 1/4	20	SS	3	N/A	48- 16990A46	Laser II(1)
13 1/4	21	SS	3	N/A	48-899006A46	Laser II(1)
13 3/4	27	SS	4	N/A	48-8M8026830	Trophy Plus(1)
13 3/4	26	SS	4	N/A	48-825944A47	Trophy Plus(1)
13 3/4	25	SS	4	N/A	48-825942A47	Trophy Plus(1)
13 3/4	24	SS	4	N/A	48-825940A48	Trophy Plus(1)
13 3/4	23	SS	4	N/A	48-825938A47	Trophy Plus(1)
13 3/4	21	SS	4	N/A	48-825934A47	Trophy Plus(1)
13 3/4	19	SS	4	N/A	48-825932A46	Trophy Plus(1)
13 3/4	17	SS	4	N/A	48-825930A46	Trophy Plus(1)

(1) Performance Vent System

(2) For Superior Performance and Holding on Pontoon Boats.

(3) For 40-60hp Bigfoot/Command Thrust (CT) only (Max 60 HP). Rubber hub, painted silver.

Mercury/Mariner EFI, 90/115 HP Command Thrust, Optimax and Verado Outboards 135-350 HP

135-350HP 1978 and Newer and 90/115 CT 2014 and Newer
15 Tooth Spline
Note: Use Flo-Torq IV hub kit (835257K10) to reduce clutch rattle on 90/115 HP Command Thrust (CT), 135-200 HP 4 cylinder Verado and 150 FourStroke. Clutch rattle may be present when using 18P or lower stainless steel propellers.
350 Verado requires Flo-Torq SSR HD hub kit 8M0101601

Diameter	Pitch	Material	Blades	LH Rotation	RH Rotation	Model
14	23	Alum	4	N/A	48-8M0084497	SpitFire
14	21	Alum	4	N/A	48-8M0084496	SpitFire
14	19	Alum	4	N/A	48-8M0084495	SpitFire
14	17	Alum	4	N/A	48-8M0084494	SpitFire
14	14	Alum	4	N/A	48-8M0084493	SpitFire CT(1)(4)
14	12	Alum	4	N/A	48-8M0084491	SpitFire CT(1)(4)
14	23	Alum	3	N/A	48-832834A45	Black Max
14 1/4	21	Alum	3	N/A	48-832832A45	Black Max
14 1/2	19	Alum	3	N/A	48-832830A45	Black Max
15 1/2	18	Alum	3	N/A	48- 11324A45	Black Max
15	17	Alum	3	N/A	48-832828A45	Black Max
16	16	Alum	3	N/A	48- 16440A45	Black Max
15 1/2	15	Alum	3	N/A	48- 78116A45	Black Max
15 1/2	15	Alum	3	N/A	48- 78116CP1	Black Max XC(4)
16	14	Alum	3	N/A	48- 16438A45	Black Max
16	14	Alum	3	N/A	48- 16438CP1	Black Max XC(4)
16	13	Alum	3	N/A	48- 78114A45	Black Max
16	13	Alum	3	N/A	48- 78114CP1	Black Max XC(4)
16	12	Alum	3	N/A	48- 16436A45	Black Max
16	12	Alum	3	N/A	48- 16436CP1	Black Max XC(4)
16	11	Alum	3	48- 78117A40	48- 78112A45	Black Max
16	11	Alum	3	N/A	78112CP1	Black Max XC(4)
14	20	Alum	4	48-834855A45	48-834854A45	Alpha 4

Diameter	Pitch	Material	Blades	LH Rotation	RH Rotation	Model
14 1/2	18	Alum	4	48-834853A45	48-834852A45	Alpha 4
15	16	Alum	4	48-834851A45	48-834850A45	Alpha 4
13 3/4	21	SS	3	N/A	48- 16318A46	Vengeance
14	19	SS	3	48- 16317A46	48- 16316A46	Vengeance
14 1/2	17	SS	3	48- 16315A46	48- 16314A46	Vengeance
14 1/2	15	SS	3	N/A	48- 16312A46	Vengeance
13.5	22	SS	3	N/A	48-899202A46	Enertia(2)
13.6	21	SS	3	48-899003A46	48-899002A46	Enertia(2)
13.8	20	SS	3	N/A	48-899000A46	Enertia(2)
14	19	SS	3	48-898999A46	48-898998A46	Enertia(2)
14.2	18	SS	3	N/A	48-898996A46	Enertia(2)
14.5	17	SS	3	48-898995A46	48-898994A46	Enertia(2)
14.7	16	SS	3	N/A	48-898992A46	Enertia(2)
15.0	15	SS	3	48-898991A46	48-898990A46	Enertia(2)
15.3	14	SS	3	48-8M0079504	48-898988A46	Enertia(2)
15.6	13	SS	3	48-8M0070076	48-8M0070074	Enertia(2)
16.0	11	SS	3	48-8M0070077	48-8M0070079	Enertia(2)
14.5	17	SS	3		48-8M0095890	Enertia w/ FT4 Hub
14.7	16	SS	3		48-8M0095889	Enertia w/ FT4 Hub
15	15	SS	3		48-8M0095888	Enertia w/ FT4 Hub
15.3	14	SS	3		48-8M0095887	Enertia w/ FT4 Hub
15.6	13	SS	3		48-8M0095886	Enertia w/ FT4 Hub
16	11	SS	3		48-8M0095885	Enertia w/ FT4 Hub
16.0	17	SS	3	48-8M0040399	48-8M0040398	Enertia ECO(2)(3)
16.0	18	SS	3	48-8M0040397	48-8M0040396	Enertia ECO(2)(3)
16.0	19	SS	3	48-8M0040401	48-8M0040400	Enertia ECO(2)(3)
16.0	20	SS	3	48-8M0040407	48-8M0040406	Enertia ECO(2)(3)
16.0	21	SS	3	48-8M0040403	48-8M0040402	Enertia ECO(2)(3)
16.0	22	SS	3	48-8M0040409	48-8M0040408	Enertia ECO(2)(3)
16.0	23	SS	3	48-8M0040405	48-8M0040404	Enertia ECO(2)(3)
14 3/8	27	SS	3	48- 18281A46	48- 18280A46	Mirage Plus(2)(3)
14 1/2	25	SS	3	48- 13707A46	48- 13706A46	Mirage Plus(2)(3)
14 5/8	23	SS	3	48- 13705A46	48- 13704A46	Mirage Plus(2)(3)
14 3/4	21	SS	3	48- 13703A46	48- 13702A46	Mirage Plus(2)(3)
15 1/4	19	SS	3	48- 13701A46	48- 13700A46	Mirage Plus(2)(3)
15 3/8	18	SS	3	48-889619A46	48-889620A46	Mirage Plus(2)(3)
15 1/2	17	SS	3	48- 90159A46	48- 18278A46	Mirage Plus(2)(3)
15 3/4	15	SS	3	48- 19841A46	48- 19838A46	Mirage Plus(2)(3)
16	13	SS	3	N/A	48-826072A46	Mirage Plus(2)(3)
14	24	SS	3	N/A	48-8M8023120	Fury(2)
14	25	SS	3	N/A	48-8M8023140	Fury(2)
14	26	SS	3	N/A	48-8M8023160	Fury(2)
14	27	SS	3	N/A	48-8M8023180	Fury(2)
14 1/2	24	SS	4	N/A	48-8M0114408	Fury 4(2)
14 1/2	25	SS	4	N/A	48-8M0114409	Fury 4(2)
14 1/2	26	SS	4	N/A	48-8M0114410	Fury 4(2)
14 5/8	29	SS	3	N/A	48-825870A47	Tempest Plus(2)(3)
14 5/8	27	SS	3	N/A	48-825868A47	Tempest Plus(2)(3)
14 5/8	26	SS	3	N/A	48-825874A47	Tempest Plus(2)(3)
14 5/8	25	SS	3	N/A	48-825866A47	Tempest Plus(2)(3)
14 5/8	24	SS	3	N/A	48-825872A47	Tempest Plus(2)(3)
14 5/8	23	SS	3	N/A	48-825864A47	Tempest Plus(2)(3)
14 5/8	22	SS	3	N/A	48-8M8026820	Tempest Plus(2)(3)
14 5/8	21	SS	3	N/A	48-825862A47	Tempest Plus(2)(3)

MERCURY PROPELLER APPLICATION CHARTS

Diameter	Pitch	Material	Blades	LH Rotation	RH Rotation	Model
14 5/8	19	SS	3	N/A	48-825860A47	Tempest Plus(2)(3)
14 5/8	17	SS	3	N/A	48-8M8026790	Tempest Plus(2)(3)
13 3/4	28	SS	4	N/A	48-825948A47	Trophy Plus (SM)(2)
13 3/4	27	SS	4	N/A	48-8M8026830	Trophy Plus (SM)(2)
13 3/4	26	SS	4	N/A	48-825944A47	Trophy Plus (SM)(2)
13 3/4	25	SS	4	N/A	48-825942A47	Trophy Plus (SM)(2)
13 3/4	24	SS	4	N/A	48-825940A48	Trophy Plus (SM)(2)
13 3/4	23	SS	4	N/A	48-825938A47	Trophy Plus (SM)(2)
13 3/4	21	SS	4	N/A	48-825934A47	Trophy Plus (SM)(2)
13 3/4	19	SS	4	N/A	48-825932A46	Trophy Plus (SM)(2)
13 3/4	17	SS	4	N/A	48-825930A46	Trophy Plus (SM)(2)
13 1/4	23	SS	5	N/A	48-815762A46	HighFive(2)
13 1/4	21	SS	5	N/A	48-815760A46	HighFive(2)
13 1/4	19	SS	5	N/A	48-815758A46	HighFive(2)
13 1/2	17	SS	5	N/A	48-821154A46	HighFive(2)
14	21	SS	4	48-825903A48	48-825902A48	VenSura(2)
14	19	SS	4	48-825901A48	48-825900A48	VenSura(2)
14 1/2	17	SS	4	48-825899A48	48-825898A48	VenSura(2)
14 5/8	25	SS	4	48-857033A46	48-857032A46	Revolution 4(2)
14 5/8	23	SS	4	48-857031A46	48-857030A46	Revolution 4(2)
14 5/8	21	SS	4	48-857029A46	48-857028A46	Revolution 4(2)
14 5/8	20	SS	4	48-8M0070051	48-8M0070052	Revolution 4(2)
14 5/8	19	SS	4	48-857027A46	48-857026A46	Revolution 4(2)
14 5/8	17	SS	4	48-857025A46	48-857024A46	Revolution 4(2)
14 5/8	15	SS	4	48-8M0064449	48-857022A46	Revolution 4(2)
15 3/4	36	SS	4	48-832123A55	48-832124A55	Bravo I(3)
15 3/4	34	SS	4	48-832121A55	48-832122A55	Bravo I(3)
15 3/4	32	SS	4	48-831919A55	48-831920A55	Bravo I(3)
15 3/4	30	SS	4	48-831917A55	48-831918A55	Bravo I(3)
15 3/4	28	SS	4	48-831915A55	48-831916A55	Bravo I(3)
15 3/4	26	SS	4	48-831913A55	48-831914A55	Bravo I(3)
15 3/4	24	SS	4	48-831911A55	48-831912A55	Bravo I(3)
15 3/4	22	SS	4	48-831909A55	48-831910A55	Bravo I(3)

(1) Recommended for 90/115 Hp Command Thrust outboards for Tri/Pontoons

(2) Performance Vent System

(3) Comes standard with Flo-Torq hub for 1" shaft. For Outboards with 1 1/4" shafts, order 8M0101601

(4) Provides Superior Holding and Performance for Pontoon Boats.

MERCURY MERCRUISER APPLICATION CHARTS

Mercury MerCruiser Alpha & Bravo One

Alpha and Bravo One Sterndrives - All Horsepowers
15 Tooth Spline
For 400HP + Use Flo-Torq solid hub assembly. Replace A46 with A55 or order hub kit part number 835258K2
For Bravo One XR and XZ drives, Use Flo-Torq 1 1/4" hub assembly. Replace A46 with A65 or order hub kit part number 840389K06.

Diameter	Pitch	Material	Blades	LH Rotation	RH Rotation	Model
14	12	Alum	4	N/A	48-8M0084491	SpitFire CT
14	14	Alum	4	N/A	48-8M0084493	SpitFire CT
14	17	Alum	4	N/A	48-8M0084494	SpitFire
14	19	Alum	4	N/A	48-8M0084495	SpitFire
14	21	Alum	4	N/A	48-8M0084496	SpitFire
14	23	Alum	4	N/A	48-8M0084497	SpitFire
14	23	Alum	3	N/A	48-832834A45	Black Max

Diameter	Pitch	Material	Blades	LH Rotation	RH Rotation	Model
14 1/4	21	Alum	3	N/A	48-832832A45	Black Max
14 1/2	19	Alum	3	N/A	48-832830A45	Black Max
15 1/2	18	Alum	3	N/A	48- 11324A45	Black Max
15	17	Alum	3	N/A	48-832828A45	Black Max
16	16	Alum	3	N/A	48- 16440A45	Black Max
15 1/2	15	Alum	3	N/A	48- 78116A45	Black Max
15 1/2	15	Alum	3	N/A	48- 78116CP1	Black Max XC(3)
16	14	Alum	3	N/A	48- 16438A45	Black Max
16	14	Alum	3	N/A	48- 16438CP1	Black Max XC(3)
16	13	Alum	3	N/A	48- 78114A45	Black Max
16	13	Alum	3	N/A	48- 78114CP1	Black Max XC(3)
16	12	Alum	3	N/A	48- 16436A45	Black Max
16	12	Alum	3	N/A	48- 16436CP1	Black Max XC(3)
16	11	Alum	3	48- 78117A40	48- 78112A45	Black Max
16	11	Alum	3	N/A	78112CP1	Black Max XC(3)
14	20	Alum	4	48-834855A45	48-834854A45	Alpha 4
14 1/2	18	Alum	4	48-834853A45	48-834852A45	Alpha 4
15	16	Alum	4	48-834851A45	48-834850A45	Alpha 4
13.5	22	SS	3	N/A	48-899202A46	Enertia(1)
13.6	21	SS	3	48-899003A46	48-899002A46	Enertia(1)
13.8	20	SS	3	N/A	48-899000A46	Enertia(1)
14.0	19	SS	3	48-898999A46	48-898998A46	Enertia(1)
14.2	18	SS	3	N/A	48-898996A46	Enertia(1)
14.5	17	SS	3	48-898995A46	48-898994A46	Enertia(1)
14.7	16	SS	3	N/A	48-898992A46	Enertia(1)
15.0	15	SS	3	48-898991A46	48-898990A46	Enertia(1)
15.3	14	SS	3	48-8M0079504	48-898988A46	Enertia(1)
15.6	13	SS	3	48-8M0070076	48-8M0070074	Enertia(1)
16.0	11	SS	3	48-8M0070077	48-8M0070079	Enertia(1)
13 3/4	21	SS	3	N/A	48- 16318A46	Vengeance
14	19	SS	3	48- 16317A46	48- 16316A46	Vengeance
14 1/2	17	SS	3	48- 16315A46	48- 16314A46	Vengeance
14 1/2	15	SS	3	N/A	48- 16312A46	Vengeance
14	21	SS	4	48-825903A48	48-825902A48	Vensura(1)
14	19	SS	4	48-825901A48	48-825900A48	Vensura(1)
14 1/2	17	SS	4	48-825899A48	48-825898A48	Vensura(1)
13 1/4	23	SS	5	N/A	48-815762A46	HighFive(1)
13 1/4	21	SS	5	N/A	48-815760A46	HighFive(1)
13 1/4	19	SS	5	N/A	48-815758A46	HighFive(1)
13 1/2	17	SS	5	N/A	48-821154A46	HighFive(1)
15 1/4	36	SS	4	48-832123A55	48-832124A55	Bravo I(2)
15 1/4	34	SS	4	48-832121A55	48-832122A55	Bravo I(2)
15 1/4	32	SS	4	48-831919A55	48-831920A55	Bravo I(2)
15 1/4	30	SS	4	48-831917A55	48-831918A55	Bravo I(2)
15 1/4	28	SS	4	48-831915A55	48-831916A55	Bravo I(2)
15 1/4	26	SS	4	48-831913A45	48-831914A45	Bravo I(2)
15 1/4	24	SS	4	48-831911A45	48-831912A45	Bravo I(2)
15 1/4	22	SS	4	48-831909A45	48-831910A45	Bravo I(2)
16	17	SS	3	48-8M0040399	48-8M0040398	Enertia ECO(1)
16	18	SS	3	48-8M0040397	48-8M0040396	Enertia ECO(1)
16	19	SS	3	48-8M0040401	48-8M0040400	Enertia ECO(1)
16	20	SS	3	48-8M0040407	48-8M0040406	Enertia ECO(1)
16	21	SS	3	48-8M0040403	48-8M0040402	Enertia ECO(1)
16	22	SS	3	48-8M0040409	48-8M0040408	Enertia ECO(1)

Diameter	Pitch	Material	Blades	LH Rotation	RH Rotation	Model
16	23	SS	3	48-8M0040405	48-8M0040404	Enertia ECO(1)
15	29	SS	3	48-821719A56	48-821720A56	Mirage Plus(1)
14 3/8	27	SS	3	48- 18281A46	48- 18280A46	Mirage Plus(1)
14 1/2	25	SS	3	48- 13707A46	48- 13706A46	Mirage Plus(1)
14 5/8	23	SS	3	48- 13705A46	48- 13704A46	Mirage Plus(1)
14 3/4	21	SS	3	48- 13703A46	48- 13702A46	Mirage Plus(1)
15 1/4	19	SS	3	48- 13701A46	48- 13700A46	Mirage Plus(1)
15 3/8	18	SS	3	48-889619A46	48-889620A46	Mirage Plus(1)
15 1/2	17	SS	3	48- 90159A46	48- 18278A46	Mirage Plus(1)
15 3/4	15	SS	3	48- 19841A46	48- 19838A46	Mirage Plus(1)
16	13	SS	3	N/A	48-826072A46	Mirage Plus(1)
14 5/8	25	SS	4	48-857033A46	48-857032A46	Revolution 4(1)(2)
14 5/8	23	SS	4	48-857031A46	48-857030A46	Revolution 4(1)(2)
14 5/8	20	SS	4	48-8M0070051	48-8M0070052	Revolution 4(1)(2)
14 5/8	21	SS	4	48-857029A46	48-857028A46	Revolution 4(1)(2)
14 5/8	19	SS	4	48-857027A46	48-857026A46	Revolution 4(1)(2)
14 5/8	17	SS	4	48-857025A46	48-857024A46	Revolution 4(1)(2)
14 5/8	15	SS	4	48-8M0064449	48-857022A46	Revolution 4(1)(2)
15 5/8	34	SS	5	48-889973A65	48-889972A65	Maximus (1)(2)
15 5/8	32	SS	5	48-889971A65	48-889970A65	Maximus(1)(2)
15 5/8	30	SS	5	48-889969A65	48-889968A65	Maximus(1)(2)
15 5/8	28	SS	5	48-889967A65	48-889966A65	Maximus(1)(2)
15 5/8	26	SS	5	48-889965A65	48-889964A65	Maximus(1)(2)
15 5/8	24	SS	5	48-889975A65	48-889974A65	Maximus(1)(2)

(1) Performance Vent System

(2) Recommended for Bravo One Drives only

(3) Provides Superior Holding and Performance for Pontoon Boats

Mercury MerCruiser Bravo Two

All engines
Bravo Two Propeller Hardware (not included with propeller):
Forward Cupped Washer 12-55072
Tab Washer 14-34817
Flo-Torq I Round Rubber Hub 43636T
Aft Cupped Washer 12-54738
Prop Nut 11-54034
Forward Thrust Washer 55074T
Aft Washer 12-55073A 2

Diameter	Pitch	Material	Blades	LH Rotation	RH Rotation	Model
17 1/4	25	Alum	3	48- 18621A40	48- 18620A40	Bravo Two
17 1/2	23	Alum	3	48- 18619A40	48- 18618A40	Bravo Two
17 3/4	21	Alum	3	48- 18617A40	48- 18616A40	Bravo Two
18 1/4	19	Alum	3	48- 18615A40	48- 18614A40	Bravo Two
18 3/4	17	Alum	3	48- 18613A40	48- 18612A40	Bravo Two
19 1/4	15	Alum	3	48- 18611A40	48- 18610A40	Bravo Two
19 1/2	13	Alum	3	48- 18609A40	48- 18608A40	Bravo Two
20	11	Alum	3	48- 18607A40	48- 18606A40	Bravo Two
17 1/4	25	SS	3	48- 18621A 6	48- 18620A 6	Bravo Two
17 1/2	23	SS	3	48- 18619A 6	48- 18618A 6	Bravo Two
19 1/2	22 1/2	SS	3	N/A	48-897550A06(1)	Bravo Two
17 3/4	21	SS	3	48- 18617A 6	48- 18616A 6	Bravo Two
18 1/4	19	SS	3	48- 18615A 6	48- 18614A 6	Bravo Two
18 3/4	17	SS	3	48- 18613A 6	48- 18612A 6	Bravo Two
19 1/4	15	SS	3	48- 18611A 6	48- 18610A 6	Bravo Two

Diameter	Pitch	Material	Blades	LH Rotation	RH Rotation	Model
19 1/2	13	SS	3	48- 18609A 6	48- 18608A 6	Bravo Two
20	11	SS	3	48- 18607A 6	48- 18606A 6	Bravo Two

(1) Recommended for single diesel applications

Mercury MerCruiser Bravo Three

4 blade front 3 blade rear propellers
New for 2013 Bravo Three Diesel Propellers
If boat is propped correctly with original Bravo Three propellers drop down one inch of pitch to maintain engine RPM with Bravo Three Diesel propellers.
All Engines
Bravo Three Propeller Hardware (not included with propellers):
Forward Thrust Washer 805101T
Aft Thrust Washer 805100
Forward Prop Nut 859131
Aft Prop Nut 862907
Bravo Three Inner Prop Nut Wrench 805457T 1

Pitch	Material	Finish	Blades (Front & Rear)	LH Rotation Front Prop	RH Rotation Rear Prop	Model
28	SS	Matte	4 & 3	48-8M8022460	48-8M8022470	Bravo Three
26	SS	Matte	4 & 3	48-8M8022440	48-8M8022450	Bravo Three
24	SS	Matte	4 & 3	48-8M8022420	48-8M8022430	Bravo Three
22.5	SS	Matte	4 & 3	48-8M8022400	48-8M8022410	Bravo Three
21	SS	Matte	4 & 3	48-8M8022380	48-8M8022390	Bravo Three
20	SS	Matte	4 & 3	48-8M8022360	48-8M8022370	Bravo Three
19	SS	Matte	4 & 3	48-8M8022340	48-8M8022350	Bravo Three
28	SS	Hi-Luster	4 & 3	48-8M8022469	48-8M8022479	Bravo Three
26	SS	Hi-Luster	4 & 3	48-8M8022449	48-8M8022459	Bravo Three
24	SS	Hi-Luster	4 & 3	48-8M8022429	48-8M8022439	Bravo Three
22.5	SS	Hi-Luster	4 & 3	48-8M8022409	48-8M8022419	Bravo Three
21	SS	Hi-Luster	4 & 3	48-8M8022389	48-8M8022399	Bravo Three
20	SS	Hi-Luster	4 & 3	48-8M8022369	48-8M8022379	Bravo Three
19	SS	Hi-Luster	4 & 3	48-8M8022349	48-8M8022359	Bravo Three
27	SS	Matte	4 & 3	48-8M0074871	48-8M0074872	Bravo Three Diesel
25	SS	Matte	4 & 3	48-8M0074869	48-8M0074870	Bravo Three Diesel
23	SS	Matte	4 & 3	48-8M0074867	48-8M0074868	Bravo Three Diesel
21	SS	Matte	4 & 3	48-8M0074865	48-8M0074866	Bravo Three Diesel

MERCURY ZEUS APPLICATION CHARTS



MERCURY PROPELLER APPLICATION CHARTS

Zeus 3500 M-Series and Z-Series Propeller Chart

			Drive Speed (Knots)	21.7	22.6	23.5	24.3	25.2	26.1	26.9	27.8	28.7	29.5	30.4	31.3	32.2	33.0	33.9	34.8	35.6	36.5	37.4	38.2	39.1	40.0
Zeus 3500	RPM Range	Overall Ratio	Drive Speed (MPH)	25	26	27	28	29	30	31	32	33	34	35	36	37	38	39	40	41	42	43	44	45	46
355 hp	2800-2850	2.059:1	Z Series				9	10	11	12	13	14	15	16	17	18	19								
355 hp	2800-2850	2.244:1	M Series	5/6	6/7	7	8	9	10	11	12	12/13	13/14	14											
380 hp	3000- 3050	2.059:1	Z Series					8	9	10	11	12	13	14	15	16	17	18	19						
380 hp	3000- 3050	2.244:1	M Series	4	4/5	5/6	6/7	7	8	9	10	11	12	12/13	13/14	14									
425 hp	3000- 3050	2.059:1	Z Series								11	12	13	14	15	16	17	18	19						
425 hp	3000-3050	2.059:1	M Series			4	4/5	5	6	7	7/8	8	9	10	11	11/12	12	13	14						
425 hp	3000- 3050	2.244:1	M Series	4	4/5	5/6	6/7	7	8	9	10	11	12	12/13	13/14	14									
480 hp	3400- 3450	2.059:1	Z Series									6	7	8	9	10	11	12	13	14	15	16	17	18	19
480 hp	3400- 3450	2.059:1	M Series								4	4/5	5	6	7	7/8	8	9	9/10	10/11	11	12	12/13	13	14
480 hp	3400- 3450	2.244:1	M Series				4	5	6	7	8	8/9	9	10	11	12	12/13	13	14						

Zeus 3800 M-Series Propeller Chart

			Drive Speed (Knots)	24.3	25.2	26.1	26.9	27.8	28.7	29.5	30.4	31.3	32.2	33.0	33.9	34.8	35.6	36.5	37.4	38.2	39.1	40.0	40.8	41.7	42.6
Zeus 3800	RPM	Overall Ratio	Drive Speed (MPH)	28	29	30	31	32	33	34	35	36	37	38	39	40	41	42	43	44	45	46	47	48	49
550	3000-3050	1.795:1	M Series					4	4/5	5	6	7	7/8	8	9	9/10	10/11	11	12	12/13	13	14			
550	3000-3050	1.957:1	M Series	4	5	6	7	8	8/9	9	10	11	12	12/13	13	14									
600	3000-3050	1.795:1	M Series					4	4/5	5	6	7	7/8	8	9	9/10	10/11	11	12	12/13	13	14			
600	3000-3050	1.957:1	M Series			6	7	8	8/9	9	10	11	12	12/13	13	14									
715	2500-2550	1.337:1	M Series										4	5	5/6	6	6/7	7	8	8/9	9	10	10/11	11	12

NON-MERCURY ENGINE APPLICATION CHARTS

Non-Mercury Outboard (4-1/4 In. Gearcase)

Non-Mercury Outboard (4-1/4 In. Gearcase)
Suzuki/Johnson 90-115HP 4-stroke 2001-2008 - use hub kit 835283Q1
Suzuki/Johnson 100-115 4-Stroke 2009 and newer 140HP 4-stroke - use hub kit 835283Q2
Suzuki 70-90 HP 4-stroke 2009 and newer - use hub kit 835283Q03
Honda 75-90HP 1998 and older - use hub kit 835277Q1
Honda 75-90HP 1999 and newer, 115-130HP - use hub kit 835279Q2
Yamaha 50-100 HP - use hub kit 835272Q 1
Yamaha 115-130 HP - use hub kit 835271Q 2

Diameter	Pitch	Material	Blades	LH Rotation	RH Rotation	Model
12 1/2	23	Alum	3	N/A	48- 77350A45	Black Max
12 3/4	21	Alum	3	N/A	48- 77348A45	Black Max
13	19	Alum	3	N/A	48- 77346A45	Black Max
13 1/4	17	Alum	3	N/A	48- 77344A45	Black Max
13 1/4	16	Alum	3	N/A	48-854360A45	Black Max
13 3/4	15	Alum	3	N/A	48- 77342A45	Black Max
13 7/8	14	Alum	3	N/A	48-854352A45	Black Max
14	13	Alum	3	N/A	48- 77340A45	Black Max
14	13	Alum	3	N/A	48- 77340CP1	Black Max XC(2)
14	11	Alum	3	N/A	48- 77338A45	Black Max
14	11	Alum	3	N/A	48- 77338CP1	Black Max XC(2)
14	10	Alum	3	N/A	48-854342A45	Black Max
14	10	Alum	3	N/A	48-854342CP1	Black Max XC(2)
14	9	Alum	3	N/A	48-854340A45	Black Max
13 3/4	15	Alum	3	N/A	48- 77342A33	Black Max(3)
14	13	Alum	3	N/A	48- 77340A33	Black Max(3)
14	11	Alum	3	N/A	48- 77338A33	Black Max(3)

Diameter	Pitch	Material	Blades	LH Rotation	RH Rotation	Model
14	10	Alum	3	N/A	48-854342A33	Black Max(3)
14	9	Alum	3	N/A	48-854340A33	Black Max(3)
12.8	19	Alum	4	N/A	48-8M8026600	Spitfire
12.8	17	Alum	4	N/A	48-8M8026590	Spitfire
12.8	15	Alum	4	N/A	48-8M8026580	Spitfire
13.8	13	Alum	4	N/A	48-8M8026570	Spitfire Pontoon(2)
13.8	11	Alum	4	N/A	48-8M8026560	Spitfire Pontoon(2)
13.8	10	Alum	4	N/A	48-8M8026555	Spitfire Pontoon(2)
12.7	21	SS	4	N/A	48-8M0055551	Spitfire X7(1)
12.7	19	SS	4	N/A	48-8M0055550	Spitfire X7(1)
13.0	17	SS	4	N/A	48-8M0055549	Spitfire X7(1)
13.5	15	SS	4	N/A	48-8M0055548	Spitfire X7(1)
14.0	13	SS	4	N/A	48-8M0055547	Spitfire X7(1)
13	18	SS	3	N/A	48- 16988A46	Vengeance
13 1/8	16	SS	3	N/A	48- 16986A46	Vengeance
13 1/4	15	SS	3	N/A	48-854354A46	Vengeance
13 3/8	14	SS	3	N/A	48- 17314A46	Vengeance
14	12	SS	3	N/A	48- 17312A46	Vengeance
14	10	SS	3	N/A	48- 17310A46	Vengeance
13 3/4	28	SS	4	N/A	48-825948A47	Trophy Plus(1)
13 3/4	27	SS	4	N/A	48-8M8026830	Trophy Plus(1)
13 3/4	26	SS	4	N/A	48-825944A47	Trophy Plus(1)
13 3/4	25	SS	4	N/A	48-825942A47	Trophy Plus(1)
13 3/4	24	SS	4	N/A	48-825940A48	Trophy Plus(1)
13 3/4	23	SS	4	N/A	48-825938A47	Trophy Plus(1)
13 3/4	21	SS	4	N/A	48-825934A47	Trophy Plus(1)
13 3/4	19	SS	4	N/A	48-825932A46	Trophy Plus(1)
13 3/4	17	SS	4	N/A	48-825930A46	Trophy Plus(1)

(1) Performance Vent System

(2) For Superior Performance and Holding on Pontoon Boats.

(3) For 40-60hp only (Max 60 HP). Rubber hub, painted silver.

Non-Mercury Outboard/Sterndrive,4-3/4 In. Gearcase

Non-Mercury Outboards & Sterndrives (4-3/4 In. Gearcase)
Evinrude/Johnson/OMC 1991 and newer - use hub kit 835265Q02
Evinrude/Johnson/OMC 1990 and older - use hub kit 835267Q1
Honda 135-225HP - use hub kit 835278Q1
Suzuki 150-300HP - use hub kit 835281Q1
Yamaha 150-300HP - use hub kit 835274Q1
Yamaha 200-250HP SHO - use hub kit 8M0075402

Diameter	Pitch	Material	Blades	LH Rotation	RH Rotation	Model
14	12	Alum	4	N/A	48-8M0084491	SpitFire
14	14	Alum	4	N/A	48-8M0084493	SpitFire
14	17	Alum	4	N/A	48-8M0084494	SpitFire
14	19	Alum	4	N/A	48-8M0084495	SpitFire
14	21	Alum	4	N/A	48-8M0084496	SpitFire
14	23	Alum	4	N/A	48-8M0084497	SpitFire
14	23	Alum	3	N/A	48-832834A45	Black Max
14.25	21	Alum	3	N/A	48-832832A45	Black Max
14.5	19	Alum	3	N/A	48-832830A45	Black Max
15.5	18	Alum	3	N/A	48- 11324A45	Black Max
15	17	Alum	3	N/A	48-832828A45	Black Max
16	16	Alum	3	N/A	48- 16440A45	Black Max
16	16	Alum	3	N/A	48- 16440CP1	Black Max XC

Diameter	Pitch	Material	Blades	LH Rotation	RH Rotation	Model
15.5	15	Alum	3	N/A	48- 78116A45	Black Max
15.5	15	Alum	3	N/A	48- 78116CP1	Black Max XC
16	14	Alum	3	N/A	48- 16438A45	Black Max
16	14	Alum	3	N/A	48- 16438CP1	Black Max XC
16	13	Alum	3	N/A	48- 78114A45	Black Max
16	13	Alum	3	N/A	48- 78114CP1	Black Max XC
16	12	Alum	3	N/A	48- 16436A45	Black Max
16	12	Alum	3	N/A	48- 16436CP1	Black Max XC
16	11	Alum	3	48- 78117A40	48- 78112A45	Black Max
14	20	Alum	4	48-834855A45	48-834854A45	Alpha 4
14.5	18	Alum	4	48-834853A45	48-834852A45	Alpha 4
15	16	Alum	4	48-834851A45	48-834850A45	Alpha 4
13.5	23	SS	3	48- 16321A46	48- 16320A46	Vengeance
13.75	21	SS	3		48- 16318A46	Vengeance
14	19	SS	3	48- 16317A46	48- 16316A46	Vengeance
14.5	17	SS	3	48- 16315A46	48- 16314A46	Vengeance
14.5	15	SS	3	N/A	48- 16312A46	Vengeance
13.5	22	SS	3	N/A	48-899202A46	Enertia
13.6	21	SS	3	48-899003A46	48-899002A46	Enertia
13.8	20	SS	3	N/A	48-899000A46	Enertia
14.0	19	SS	3	48-898999A46	48-898998A46	Enertia
14.2	18	SS	3	N/A	48-898996A46	Enertia
14.5	17	SS	3	48-898995A46	48-898994A46	Enertia
14.7	16	SS	3	N/A	48-898992A46	Enertia
15	15	SS	3	48-898991A46	48-898990A46	Enertia
15.3	14	SS	3	48-8M0079504	48-898988A46	Enertia
15.6	13	SS	3	48-8M0070076	48-8M0070074	Enertia
16.0	11	SS	3	48-8M0070077	48-8M0070079	Enertia
16	17	SS	3	48-8M0040399	48-8M0040398	Enertia ECO
16	19	SS	3	48-8M0040401	48-8M0040400	Enertia ECO
16	21	SS	3	48-8M0040403	48-8M0040402	Enertia ECO
16	23	SS	3	48-8M0040405	48-8M0040404	Enertia ECO
14.375	27	SS	3	48- 18281A46	48- 18280A46	Mirage Plus
14.5	25	SS	3	48- 13707A46	48- 13706A46	Mirage Plus
14.625	23	SS	3	48- 13705A46	48- 13704A46	Mirage Plus
14.75	21	SS	3	48- 13703A46	48- 13702A46	Mirage Plus
15.25	19	SS	3	48- 13701A46	48- 13700A46	Mirage Plus
15.375	18	SS	3	48-889619A46	48-889620A46	Mirage Plus
15.5	17	SS	3	48- 90159A46	48- 18278A46	Mirage Plus
15.75	15	SS	3	48- 19841A46	48- 19838A46	Mirage Plus
16	13	SS	3	N/A	48-826072A46	Mirage Plus
14	24	SS	3	N/A	48-8M8023120	Fury
14	25	SS	3	N/A	48-8M8023140	Fury
14	26	SS	3	N/A	48-8M8023160	Fury
14	27	SS	3	N/A	48-8M8023180	Fury
14.5	24	SS	4	N/A	48-8M0114408	Fury 4
14.5	25	SS	4	N/A	48-8M0114409	Fury 4
14.5	26	SS	4	N/A	48-8M0114410	Fury 4
14.625	29	SS	3	N/A	48-825870A47	Tempest Plus
14.625	27	SS	3	N/A	48-825868A47	Tempest Plus
14.625	26	SS	3	N/A	48-825874A47	Tempest Plus
14.625	25	SS	3	N/A	48-825866A47	Tempest Plus
14.625	24	SS	3	N/A	48-825872A47	Tempest Plus
14.625	23	SS	3	48-825865A47	48-825864A47	Tempest Plus

Diameter	Pitch	Material	Blades	LH Rotation	RH Rotation	Model
14.625	22	SS	3	N/A	48-8M8026820	Tempest Plus
14.625	21	SS	3	48-825863A47	48-825862A47	Tempest Plus
14.625	19	SS	3	48-825861A47	48-825860A47	Tempest Plus
14.625	17	SS	3	N/A	48-8M8026790	Tempest Plus
13.75	28	SS	4	N/A	48-825948A47	Trophy Plus (SM)
13.75	27	SS	4	N/A	48-8M8026830	Trophy Plus (SM)
13.75	26	SS	4	N/A	48-825944A47	Trophy Plus (SM)
13.75	25	SS	4	N/A	48-825942A47	Trophy Plus (SM)
13.75	24	SS	4	N/A	48-825940A48	Trophy Plus (SM)
13.75	23	SS	4	N/A	48-825938A47	Trophy Plus (SM)
13.75	21	SS	4	N/A	48-825934A47	Trophy Plus (SM)
13.75	19	SS	4	N/A	48-825932A46	Trophy Plus (SM)
13.75	17	SS	4	N/A	48-825930A46	Trophy Plus (SM)
13.25	25	SS	5	N/A	48-816374A46	HighFive
13.25	23	SS	5	N/A	48-815762A46	HighFive
13.25	21	SS	5	N/A	48-815760A46	HighFive
13.25	19	SS	5	N/A	48-815758A46	HighFive
13.5	17	SS	5	N/A	48-821154A46	HighFive
14	23	SS	4	48-825907A48		VenSura
14	21	SS	4	48-825903A48	48-825902A48	VenSura
14	19	SS	4	48-825901A48	48-825900A48	VenSura
14.5	17	SS	4	48-825899A48	48-825898A48	VenSura
14.625	25	SS	4	48-857033A46	48-857032A46	Revolution 4
14.625	23	SS	4	48-857031A46	48-857030A46	Revolution 4
14.625	21	SS	4	48-857029A46	48-857028A46	Revolution 4
14.625	20	SS	4	48-8M0070051	48-8M0070052	Revolution 4
14.625	19	SS	4	48-857027A46	48-857026A46	Revolution 4
14.625	17	SS	4	48-857025A46	48-857024A46	Revolution 4
14.625	15	SS	4	48-8M0064449	48-857022A46	Revolution 4
15.25	36	SS	4	48-832123A55	48-832124A55	Bravo I
15.25	34	SS	4	48-832121A55	48-832122A55	Bravo I
15.25	32	SS	4	48-831919A55	48-831920A55	Bravo I
15.25	30	SS	4	48-831917A55	48-831918A55	Bravo I
15.25	28	SS	4	48-831915A55	48-831916A55	Bravo I
15.25	26	SS	4	48-831913A45	48-831914A45	Bravo I
15.25	24	SS	4	48-831911A45	48-831912A45	Bravo I
15.25	22	SS	4	48-831909A45	48-831910A45	Bravo I

MERCURY PROPELLER TYPE

Propellers sorted by Pitch, then Diameter, then by Rotation (Right-hand, Left-hand)

MERCURY PROPELLER SELECTOR

Mercury makes a propeller to fit most any type of boating application. Another industry first, Mercury Propellers has developed a Prop Selector to assist consumers with narrowing down the propeller selection process. You can find the Propeller Selector on our website, www.mercurymarine.com, under the Mercury Propeller-Technical Information section.

MERCURY OUTBOARD PROPELLER SELECTOR CHART

Mercury Propeller selector by family for Outboards

Inflatable 16ft and Under

Model/Horsepower	Aluminum Propellers	Stainless Steel Propellers
9.9-15 HP	Black Max	
20-25 HP	Black Max	Vengeance
25-30 4-stroke	Black Max, Spitfire	Vengeance
40-60 HP 4-stroke	Black Max, Spitfire	Vengeance, Trophy Sport

Aluminum

(14'-21') (4.3-6.4m)

Model/Horsepower	Aluminum Propellers	Stainless Steel Propellers
9.9-15 HP	Black Max	
20-25 HP	Black Max	Vengeance
25-30 HP 4-stroke	Black Max, Spitfire	Vengeance
40-60 HP (incl. 4-stroke)	Black Max, Spitfire	Vengeance, Trophy Sport
75-115 HP	Black Max, Spitfire	Vengeance, Laser II, Trophy Plus
135-300 HP	Black Max, Spitfire, Alpha 4	High Five, Tempest, Fury, Enertia

Fiberglass

to 14' (4.3m)

Model/Horsepower	Aluminum Propellers	Stainless Steel Propellers
9.9-15 HP	Black Max	
20-25 HP	Black Max	Vengeance
25-30 HP 4-stroke	Black Max, Spitfire	Vengeance

Fiberglass Runabout and Inflatable RIB

14'-17' (4.3-5.2m)(closed deck or bowrider, same hull...)

Model/Horsepower	Aluminum Propellers	Stainless Steel Propellers
30-60 HP (incl. 4-stroke)	Black Max, Spitfire	Vengeance, Trophy Sport
75-125 HP	Black Max, Spitfire	Vengeance, Laser II, Trophy Plus
135-150 HP	Black Max, Spitfire, Alpha 4	Vengeance, High Five, Enertia, Vensura

Fiberglass Fish-Type

14'-17' (4.3-5.2m) (fish & ski, side console, center console)

Model/Horsepower	Aluminum Propellers	Stainless Steel Propellers
30-60 HP (incl. 4-stroke)	Black Max, Spitfire	Vengeance, Trophy Sport
75-115 HP	Black Max, Spitfire	Vengeance, Laser II, Trophy Plus
135-225 HP	Black Max, Spitfire, Alpha 4	High Five,Vensura, Enertia, Tempest, Fury

Fiberglass Bass

14'-17' (4.3-5.2m)

Model/Horsepower	Aluminum Propellers	Stainless Steel Propellers
30-60 HP (incl. 4-stroke)	Black Max, Spitfire	Vengeance, Trophy Sport
75-115HP	Black Max, Spitfire	Vengeance, Laser II, Trophy Plus
135-225 HP	Black Max, Spitfire	Trophy Plus, Tempest Plus, HiFive, Fury

Fiberglass Runabout and Inflatable RIB

17'-21' (5.2-6.4m) (closed deck or bowrider, same hull . . .)

Model/Horsepower	Aluminum Propellers	Stainless Steel Propellers
60 4-stroke BigFoot	Black Max, Spitfire	Vengeance
75-125 HP	Black Max, Spitfire	Vengeance, Laser II
135-300 HP	Black Max, SpitfireAlpha 4	Vengeance, High Five, Vensura, Enertia

Fiberglass Fish-Type

17'-21' (5.2-6.4m) (fish & ski, side console, center console, cuddy)

Model/Horsepower	Aluminum Propellers	Stainless Steel Propellers
75-125 HP	Black Max, Spitfire	Vengeance, Laser II, Trophy Plus
135-300 HP	Black Max, Spitfire, Alpha 4	Enertia, Laser, Vensura, Tempest Plus, HiFive

Fiberglass Bass

17'-21' (5.2-6.4m)

Model/Horsepower	Aluminum Propellers	Stainless Steel Propellers
75-125 HP	Black Max, Spitfire	Vengeance, Laser II, Trophy Plus
135-225 HP	Spitfire	Trophy Plus, Tempest Plus, HiFive, Fury
250+ HP		Fury, Tempest Plus, Trophy Plus, Bravo I XS, Pro ET

Fiberglass Fishing

21' + (6.4m+) (side console, center console, cuddy)

Model/Horsepower	Aluminum Propellers	Stainless Steel Propellers
135-300 HP		Enertia, Enertia ECO, Rev 4, Vensura, Tempest Plus, Mirage Plus

Aluminum Pontoon

16'-28' (4.9-8.5m)

Model/Horsepower	Aluminum Propellers	Stainless Steel Propellers
15-30	Black Max	Vengeance
40-60 HP (incl. 4-stroke)	Black Max, Spitfire	Vengeance, Trophy Sport
40-60 HP 4-stroke BigFoot	Black Max, Spitfire Pontoon	Vengeance
75-115 HP	Black Max, Spitfire Pontoon	Vengeance
135-300 HP	Black Max	Enertia,Vengeance, Rev 4, Mirage Plus

Fiberglass Deckboat

16'-24' (4.9-7.3m)

Model/Horsepower	Aluminum Propellers	Stainless Steel Propellers
40-60 4-stroke BigFoot	Black Max, Spitfire	Vengeance
75-115 HP	Black Max, Spitfire	Vengeance, Laser II, Trophy Plus
135-300HP	Black Max, Spitfire, Alpha 4	Vengeance, High Five, Vensura, Enertia

MERCURY STERNDRIVE PROPELLER SELECTOR CHART

Mercury Propeller selector by famliy for Sterndrives

Fiberglass Runabout

14'-17' (4.3-5.2m)(closed deck or bowrider, same hull...)

Model/Horsepower	Aluminum Propellers	Stainless Steel Propellers
3.0L	Black Max, Alpha 4	Vengeance, High Five
4.3L	Black Max, Alpha 4	Vengeance, Laser II, High Five

Fiberglass Runabout

17'-21' (5.2-6.4m) (closed deck or bowrider, same hull . . .)

Model/Horsepower	Aluminum Propellers	Stainless Steel Propellers
3.0L	Black Max, Alpha 4	Vengeance, Vensura
4.3L	Black Max, Alpha 4	Vengeance, Laser II, High Five
5.0L	Black Max, Alpha 4	Vengeance, Laser II, High Five
5.7L	Black Max, Alpha 4	Vengeance, Laser II, High Five

Fiberglass Runabout/Sport Boat

21' + (6.4m+) (side console, center console, cuddy)

Model/Horsepower	Aluminum Propellers	Stainless Steel Propellers
5.7L	Black Max, Alpha 4	Vengeance, Mirage Plus, Revolution 4
350 Mag		Vengeance, Mirage Plus, Bravo 1, Revolution 4
MX 6.2L MPI		Vengeance, Mirage Plus, Bravo 1, Revolution 4
8.2L Mag		Vengeance, Mirage Plus, Bravo 1, Revolution 4
8.2L Mag HO		Vengeance, Mirage Plus, Bravo 1, Revolution 4

Fiberglass Cruiser

21' + (6.4m+)

Model/Horsepower	Aluminum Propellers	Stainless Steel Propellers
4.3L	Black Max, Alpha 4	Vengeance, High Five
5.0L	Black Max, Alpha 4	Vengeance, High Five
5.7L	Black Max, Alpha 4	Enertia, Vengeance, Mirage Plus, Rev 4
350 Mag		Enertia, Vengeance, Mirage Plus, Rev 4
MX 6.2L MPI		Enertia, Vengeance, Mirage Plus, Rev 4
8.2L Mag		Enertia, Vengeance, Mirage Plus, Rev 4
8.2L Mag HO		Enertia, Vengeance, Mirage Plus, Rev 4

Fiberglass Deckboat

16'-24' (4.9-7.3m)

Model/Horsepower	Aluminum Propellers	Stainless Steel Propellers
3.0L	Black Max, Alpha 4	Vengeance, High Five
4.3L	Black Max, Alpha 4	Vengeance, High Five
5.0L	Black Max, Alpha 4	Vengeance, High Five
5.7L	Black Max, Alpha 4	Vengeance, Mirage Plus, High Five, Revolution 4
350 Mag		Vengeance, Mirage Plus, Revolution 4
MX 6.2L MPI		Vengeance, Mirage Plus, Revolution 4
8.2L Mag		Vengeance, Mirage Plus, Revolution 4
8.2L Mag HO		Vengeance, Mirage Plus, Revolution 4

CLEAR MACHETE

CLEAR MACHETE PROPELLER



48- 18428A 5

9 1/4 X 3 RH Plastic 2 BL

CLEAR MACHETE PROPELLER



48-MAF12406T

10 X 3 1/2 RH Plastic 2 BL

CLEAR MACHETE PROPELLER



48-813730A 3

11 X 5 RH Plastic 2 BL

BLACK MAX

For good overall performance and value, the Black Max is your prop. The Black Max aluminum propellers are standard equipment on most boats with Mercury/Mariner/MerCruiser power. Recommended for use on boats with up to 250 Hp and with a top speed of less than 50MPH. Pontoon style props available - see Black Max XC.

For all and Alpha and Bravo One sterndrives
High quality die-cast 3 or 4 blade aluminum
Attractive and durable high-gloss Phantom Black finish
Easy to maintain & repair.

BLACK MAX MERCURY/MARINER 2.5-3.5 HP

BLACK MAX PROPELLER



48-815083A01
7 3/8 X 6 RH Plastic 3 BL

48-815083A02
7 3/8 X 7 RH Plastic 3 BL

BLACK MAX MERCURY/MARINER 4-5 HP, 4-6 HP FS

Equipped with Flo-Torq I rubber hub

BLACK MAX PROPELLER



48-812949A02
7.8 X 7 RH Alum 3 BL

48-812950A02
7.8 in. dia. x 8 in. pitch RH Alum 3 blade

48-812951A02
8 3/8 X 6 RH Alum 3 BL High Thrust.

BLACK MAX MERCURY/MARINER 6-15 HP, 9.9-15 HP FS

9.9 HP (4-stroke) 2004 model year and earlier only.

15 HP (4-stroke) 2007 model year and earlier only.
Equipped with Flo-Torq I rubber hub

BLACK MAX PROPELLER



48-828158A12
9 X 10 1/2 RH Alum 3 BL

48-828156A12
9 X 9 RH Alum 3 BL

48-828154A12
9 X 8 RH Alum 3 BL

48-828152A12
9 1/4 X 7 RH Alum 3 BL

48-828150A12
9 3/4 X 6 1/2 RH Alum 3 BL

BLACK MAX MERCURY/MARINER 8/9.9 HP 4-STROKE

8/9.9 (4-Stroke) Model year 2005 and newer.
Standard gearcase.
Precision Rigging Eligible

BLACK MAX PROPELLER



48-897610A10
8.9 X 6.5 Pitch RH Aluminum 3 blade

48-897614A10
8.9 X 7.5 Pitch RH Aluminum 3 blade

48-897618A10
8.9 X 8.5 Pitch RH Aluminum 3 blade

BLACK DIAMOND KICKER PROPELLER

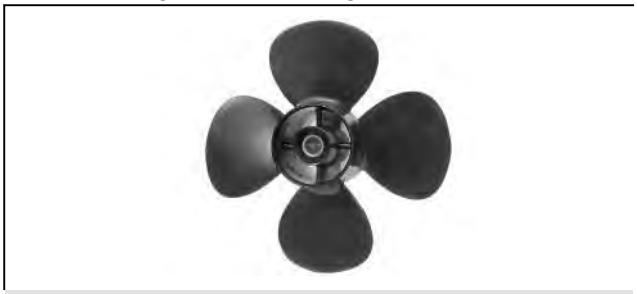

48-812954A10
8.7 x 5, RH 4 Blade

BLACK MAX MERCURY/MARINER 9.9 BF 15/20 HP (4-STROKE)

9.9 HP Bigfoot Model year 2005 and newer.
15/20 HP Model year 2008 and newer.
Precision Rigging Eligible

BLACK MAX PROPELLER



48-897748A11
9.5 x 8" pitch RH Alum 3 BL
48-897750A11
9.25 x 9" pitch RH Alum 3 BL
48-897752A11
9.25 x 10" pitch RH Alum 3 BL
48-897754A11
9.25 x 11.25 pitch RH Alum 3 BL

BLACK MAX KICKER PROPELLER



48-812950A10
- BLACK - 10 in. dia. X 7 in. pitch RH Aluminum 4 blade.
48-812948A10
- SILVER - 10 in. dia. X 7 in. pitch RH Aluminum 4 blade.

BLACK MAX MERCURY/MARINER 9.9-15 BF FS 20-25 HP

Equipped with Flo-Torq I rubber hub
9.9 Bigfoot - Model year 2004 and earlier only.
20-25HP Classic 2-Stroke

BLACK MAX PROPELLER



48- 19640A40
10 3/8 X 13 RH Alum 3 BL
48- 19639A40
10 3/8 X 12 RH Alum 3 BL
48- 19638A40
10 3/8 X 11 RH Alum 3 BL
48- 19636A10
10 3/8 X 9 1/2 RH Alum 3 BL

BLACK MAX MERCURY/MARINER 25/30 HP FS

Model year 2006 and Newer (4-Stroke)

BLACK MAX PROPELLER



48-896890A10
10" dia. X 8" Pitch RH Aluminum 3 blade
48-896892A40
9.75 X 9.5 Pitch RH Aluminum 3 blade
48-896896A40
9.5 X 11" Pitch RH Aluminum 3 blade
48-896900A40
9.25 X 12.5" Pitch RH Aluminum 3 blade

BLACK MAX MERCURY/MARINER 25-30 BF FS, 30-40 TS/FS, 50-60 TS/FS

25 HP BigFoot and & 30 HP 4-stroke (2005 model year and earlier) 40-60 2-Stroke and 4-Stroke. Equipped with Flo-Torq Reflex Hub system.

BLACK MAX PROPELLER



48- 73144A45
10 X 17 RH Alum 3 BL

48- 73142A45
10 X 16 RH Alum 3 BL

48- 73140A45
10 1/8 X 15 RH Alum 3 BL

48- 73138A45
10 1/4 X 14 RH Alum 3 BL

48-816706A45
10 3/8 X 14 RH Alum 3 BL

48-816704A45
10 1/2 X 13 RH Alum 3 BL

48- 73136A45
10 3/8 X 13 RH Alum 3 BL

48- 73134A45
10 5/8 X 12 RH Alum 3 BL

48-8M0113416
10.6 X 12 RH ALUM 3 BL

48-816702A45
10 3/4 X 12 RH Alum 3 BL

48- 85632A45
10 7/8 X 11 RH Alum 3 BL

48- 42740A45
12 X 10 1/2 RH Alum 3 BL

48-827312A45
11 5/8 X 10 1/2 RH Alum 3 BL

48- 73132A45
11 1/4 X 10 RH Alum 3 BL

48- 87818A45
12 1/4 X 9 RH Alum 3 BL

48- 42738A45
12 1/2 X 8 RH Alum 3 BL

48- 42738CP1
12 1/2 X 8 RH Alum 3 BL Extra Cup

BLACK MAX MERCURY/MARINER 40-60 BIGFOOT (4.25 IN.) FOURSTROKE

BLACK MAX PROPELLER



48- 77342A33
13 3/4 X 15 RH Alum 3 BL

48- 77340A33
14 X 13 RH Alum 3 BL

48- 77338A33
14 X 11 RH Alum 3 BL

48-854342A33
14 X 10 RH Alum 3 BL

48-854340A33
14 X 9 RH Alum 3 BL

BLACK MAX MERCURY/MARINER 40-60 HP BF FS, 75-125 HP

BLACK MAX PROPELLER



48- 77350A45
12 1/2 X 23 RH Alum 3 BL

48- 77348A45
12 3/4 X 21 RH Alum 3 BL

48- 77346A45
13 X 19 RH Alum 3 BL

48- 77344A45
13 1/4 X 17 RH Alum 3 BL

48-854360A45
13 1/4 X 16 RH Alum 3 BL

48- 77342A45
13 3/4 X 15 RH Alum 3 BL

48-854352A45
13 7/8 X 14 RH Alum 3 BL

48- 77340A45
14 X 13 RH Alum 3 BL

48- 77340CP1
14 X 13 RH Alum 3 BL - Extra Cup - Equipped with Flo-Torq III

48- 77338CP1
14 x 11 RH Alum 3 BL - Extra Cup - Equipped with extra cup & Flo-Torq III

48- 77338A45
14 X 11 RH Alum 3 BL

48-854342A45
14 X 10 RH Alum 3 BL
48-854342CP1
14 X 10 RH Alum 3 BL - Extra Cup - Equipped with Flo-Torq III
48-854340A45
14 X 9 RH Alum 3 BL

BLACK MAX MERCURY/MARINER 135-300, MERCRUISER ALPHA/BRAVO I

BLACK MAX PROPELLER

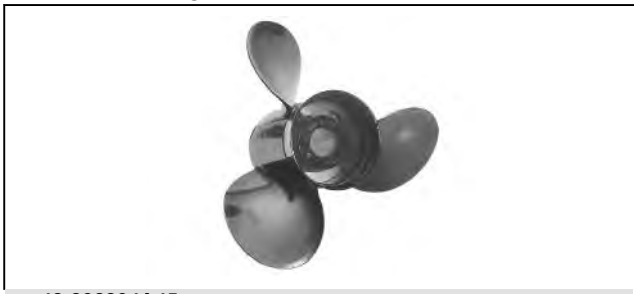

48-832834A45
14 X 23 RH Alum 3 BL
48-832832A45
14 1/4 X 21 RH Alum 3 BL
48-832830A45
14 1/2 X 19 RH Alum 3 BL
48- 11324A45
15 1/2 X 18 RH Alum 3 BL
48-832828A45
15 X 17 RH Alum 3 BL
48- 16440A45
16 X 16 RH Alum 3 BL
48- 78116A45
15 1/4 X 15 RH Alum 3 BL
48- 78116CP1
15 1/4 X 15 RH Alum 3 BL
48- 16438A45
16 X 14 RH Alum 3 BL
48- 16438CP1
16 X 14 RH Alum 3 BL
48- 78114A45
16 X 13 RH Alum 3 BL
48- 78114CP1
16 X 13 RH Alum 3 BL
48- 16436A45
16 X 12 RH Alum 3 BL
48- 16436CP1
16 X 12 RH Alum 3 BL
48- 78112A45
16 X 11 RH Alum 3 BL
78112CP1
16 X 11 RH Alum 3 BL
48- 78117A40
16 X 11 LH Alum 3 BL

SPITFIRE

Introducing the Spitfire - the world's first performance aluminum propeller. Do you want to take your boats performance to the next level? The Spitfire provides 16-25% faster acceleration, superior holding with no penalty in top speed vs. a comparable 3 blade aluminum propeller.
Hub Application:
For 25-30 HP 4-Stroke outoboards (Flo-Torq I)
40-60 HP standard gearcase outoboards (Flo-Torq Reflex)
40 Bigfoot - 300 HP (Flo-Torq II)

If engine RPM is appropriate with 3-blade prop, replace with the same pitch Spitfire propeller.

RH only

MERCURY SPITFIRE

SPITFIRE 25-30 HP

25-30 HP 4-Stroke outoboards 2006 and newer Flo-Torq I Rubber Hub.

SPITFIRE PROPELLER



48-8M8026650
9.3 X 9.5P RH Al 4 BL
48-8M8026655
9.3 X 11 RH AL 4 BL

SPITFIRE 40-60 HP

25 HP BigFoot, 30 HP 4- Stroke (2005 and earlier) 40-60 HP 2-stroke and 4-Stroke outoboards.

Equipped with Flo-Torq Reflex Hub system to eliminate clutch rattle.

SPITFIRE PROPELLER



48-8M8026625
10.6 X 12 RH AL 4 BL

48-8M8026630
10.3 X 13 RH AL 4 BL
48-8M8026635
10.1 X 14 RH AL 4 BL
48-8M8026640
10.1 X 15 RH AL 4 BL

SPITFIRE 40 BIGFOOT - 125 HP

For 40-60 HP Bigfoot 4-strokes, 75-125 HP 2 and 4-Stroke outoboards.

10-13 Pitch propellers are designed for to provide superior holding and lift for pontoon boats.

Equipped with Flo-Torq II hub system.

SPITFIRE PONTOON PROPELLER



48-8M8026555
13.8 X 10 RH AL 4 BL
48-8M8026560
13.8 X 11 RH AL 4 BL
48-8M8026570
13.8 X 13 RH AL 4 BL

SPITFIRE PROPELLER



48-8M8026580
13.4 X 15 RH AL 4 BL
48-8M8026590
13.0 X 17 RH AL 4 BL
48-8M8026600
12.5 X 19 RH AL 4 BL

SPITFIRE 90 CT-300 HP, MERCRUISER ALPHA/ BRAVO I

The SpitFire is now available in 90 CT - 300 HP outboards and Alpha/ Bravo I sterndrives, making it the world's first aluminum performance propeller for these applications. The new 4-blade SpitFire provides 16%+ better holeshot times with no loss in top end speed vs. comparable pitched 3-blade aluminum propellers+
The high performance blade design is not recommended for Alpha One drives with a 1.47 ratio
For 90+ HP CT 4-Stroke outboards and Alpha and Bravo I sterndrives

Equipped with Flo-Torq II hub system

SPITFIRE CT PROPELLER



48-8M0084491
14 X 12 RH AL 4 BL
48-8M0084493
14 X 14 RH AL 4 BL

SPITFIRE PROPELLER

48-8M0084494
14 X 17 RH AL 4 BL
48-8M0084495
14 X 19 RH AL 4 BL
48-8M0084496
14 X 21 RH AL 4 BL
48-8M0084497
14 X 23 RH AL 4 BL

ALPHA 4

Four-blade performance at an aluminum price. The Alpha 4 is an outstanding propeller for runabouts as well as daycruisers. Bolt this prop on and your boat should get on plane quicker and stay on plane at a lower speed that with a comparable 3-blade propeller. Great watersports prop! For use with 135+ HP Outboard, Alpha & Bravo I Sterndrives.

For 135+ HP outboards and Alpha and Bravo One sterndrives
4 blade die-cast aluminum
Durable high-gloss phantom black finish
Better acceleration and handling than 3 blade
Left-hand and right-hand rotation
16" - 20" pitch
Equipped with Flo-Torq II 835257K 1

ALPHA 4
MERCURY MARINE

ALPHA 4 PROPELLER



48-834854A45
14 X 20 RH Alum 4 BL

48-834855A45
14 X 20 LH Alum 4 BL

48-834852A45
14 1/2 X 18 RH Alum 4 BL

48-834853A45
14 1/2 X 18 LH Alum 4 BL

48-834850A45
15 X 16 RH Alum 4 BL

48-834851A45
15 X 16 LH Alum 4 BL

ENERTIA

Enertia, a revolutionary product that will measurably improve acceleration and top speed on many deep vee boats powered by high-horsepower outboards. Enertia has also been proven to increase the overall performance of runabouts and pontoons.
The Enertia is the first propeller to utilize the added strength and durability of the new X7 alloy. This patented new alloy allowed Mercury's Propeller Engineers to develop a propeller design that far surpasses the limits of conventional stainless steel. The X7 allow is 30% stronger and 4 times more durable than conventional stainless steel.
Typical benefits of this new design include:

- Better Acceleration and top end speed.
- Thin blades and higher rake angles for increased efficiency.
- Stays hooked up; fewer blow outs while cornering
- Keeps boats on plane at slower speeds

The 11-15P Enertia is the perfect match for 90/115 hp CT and 150+ hp pontoon and tritoon applications
Enertia is available in one inch pitch increments to dial in the ultimate performance of todays high horspeower outboards.

Equiped with Flo-Torq II Hub Kit 835257K 1

Equipped with PVS - Performance Vent System solid fittings.

MERCURY ENERTIA

ENERTIA PROPELLER



48-899202A46
13.5 x 22 RH SS 3 BL

48-899002A46
13.8 x 21 RH SS 3 BL

48-899003A46
13.8 x 21 LH SS 3 BL

48-899000A46
13.75 x 20 RH SS 3 BL

48-898998A46
14 x 19 RH SS 3 BL

48-898999A46
14 x 19 LH SS 3 BL

48-898996A46
14.2 x 18 RH SS 3 BL

48-898994A46
14.5 x 17 RH SS 3 BL

48-898995A46
14.5 x 17 LH SS 3 BL

48-898992A46
14.7 x 16 RH SS 3 BL

48-898990A46
15 x 15 RH SS 3 BL

48-898991A46
15 x 15 LH SS 3 BL

48-898988A46
15.3 x 14 RH SS 3 BL

48-8M0079504
15.3 x 14 LH SS 3 BL

48-8M0070074
15.6 x 13 RH SS 3 BL

48-8M0070076
15.6 x 13 LH SS 3 BL

48-8M0070079
16.0 x 11 RH SS 3 BL

48-8M0070077
16.0 x 11LH SS 3 BL

48-8M0095885
16 X 11 RH SS 3 BL W/ FLO TORQ 4

48-8M0095886
15.6 x 13 RH SS 3 BL W/ FLO TORQ 4

48-8M0095887
15.3 x 14 RH SS 3 BL W/ FLO TORQ 4

48-8M0095888
15 x 15 RH SS 3 BL W/ FLO TORQ 4

48-8M0095889
14.7 x 16 RH SS 3 BL W/ FLO TORQ 4

48-8M0095890
14.5 x 17 RH SS 3 BL W/ FLO TORQ 4

SPITFIRE X7 40 CT - 115 HP STANDARD

SpitFire X7, a new stainless steel propeller designed to increase speed and acceleration on all boat types with mid-range outboards. The SpitFire X7 is the first propeller for 40 hp CT - 115 hp outboards manufactured with Mercury's proprietary X7 Stainless Steel Alloy, providing additional strength and durability.

Like the aluminum SpitFire, the stainless steel SpitFire X7's small diameter generates unmatched acceleration while the aggressive blade design and cup create exceptional speed and holding.

For 40-60 HP CT 4-Stroke and 75-115 HP standard 2 and 4-Stroke outboards (Flo-Torq II)

If RPM is appropriate with the current 3-blade prop, replace with the same pitch.

13" – 21" pitch RH only

Equipped with Flo-Torq II hub system.

The 13P will be released for sale in 2016

SPITFIRE X7 PROPELLER



48-8M0055547
14 X 13 RH X7 4 BL - Coming in 2016

48-8M0055548
13.5 X 15 RH X7 4 BL

48-8M0055549
13 X 17 RH X7 4 BL

48-8M0055550
12.7 X 19 RH X7 4 BL

48-8M0055551
12.7 X 21 RH X7 4 BL

VENGEANCE

The Vengeance three-blade stainless steel propeller is an excellent choice for the boater who wants to upgrade from an aluminum prop. The Mercury Vengeance is a fine propeller for outstanding durability and good overall performance on most outboard and sterndrive powered boats.

For all outboards and Alpha and Bravo One sterndrives
Better acceleration and handling than 3 blade aluminum
Over 5 times more durable than an aluminum prop
Proven blade design
L/H and R/H 9" - 23" pitch
40-60 HP are equipped with Flo-Torq Reflex Hub System
40HP BigFoot and up are equipped with Flo-Torq II Hub kit 835257K 1

MERCURY MARINE
VENGEANCE

VENGEANCE MERCURY/MARINER 9.9-15 BF FS, 20-25 HP

9.9 Bigfoot - Model year 2004 and earlier only.
20-25HP Classic 2-Stroke

VENGEANCE PROPELLER



48- 19644A 5
10 3/8 X 13 RH SS 3 BL

VENGEANCE MERCURY/MARINER 25/30 HP 4-STROKE

VENGEANCE PROPELLER



48-899818A05
9.8" dia. X 9.5" Pitch RH Stainless Steel 3 blade

48-899820A05
9.5" dia. X 11" Pitch RH Stainless Steel 3 blade

VENGEANCE MERCURY/MARINER 25-30 BF FS, 30-40 TS/FS, 50-60 TS/FS

Equipped with Flo-Torq Reflex hub
25 HP Bigfoot - Model year 2005 and earlier only.
30-60 HP 2-Stroke and 4-Stroke

VENGEANCE PROPELLER



48-855862A46
10 1/4 X 15 RH SS 3 BL

48-855860A46
10 3/8 X 14 RH SS 3 BL

48-855858A46
10 1/2 X 13 RH SS 3 BL
48-855856A46
11 X 12 RH SS 3 BL
48-823478A46
11 5/8 X 11 RH SS 3 BL

VENGEANCE MERCURY/MARINER 40-60 BF, 75-125 TS/FS

Equipped with Flo-Torq II 835257K1

VENGEANCE PROPELLER



48- 16988A46
13 X 18 RH SS 3 BL
48- 16986A46
13 1/8 X 16 RH SS 3 BL
48-854354A46
13 1/4 X 15 RH SS 3 BL
48- 17314A46
13 3/8 X 14 RH SS 3 BL
48- 17312A46
14 X 12 RH SS 3 BL

VENGEANCE PROPELLER



48-8M0113150
14 X 12 RH ALUM 3BL

VENGEANCE PROPELLER



48- 17310A46
14 X 10 RH SS 3 BL

VENGEANCE MERCURY/MARINER 135-300, MERCRUISER ALPHA & BRAVO I

Equipped with Flo-Torq II 835257K1

VENGEANCE PROPELLER



48- 16318A46
13 3/4 X 21 RH SS 3 BL
48- 16316A46
14 X 19 RH SS 3 BL
48- 16317A46
14 X 19 LH SS 3 BL
48- 16314A46
14 1/2 X 17 RH SS 3 BL
48- 16315A46
14 1/2 X 17 LH SS 3 BL
48- 16312A46
14 1/2 X 15 RH SS 3 BL

FURY

Fury, a revolutionary product that will measurably improve acceleration and top speed on many bass boats powered by 200+ horsepower outboards.

The Fury is Mercury's first bass boat propeller to utilize the added strength and durability of the new X7 alloy. This revolutionary new alloy allowed Mercury's Propeller Engineers to develop a propeller design that far surpasses the limits of conventional stainless steel. The X7 alloy is 30% stronger and 4 times more durable than conventional stainless steel.

Fury is available in 24, 25, 26 and 27 pitch to dial in the ultimate performance of today's high horsepower bass boats.
Drop 1 inch of pitch if running with extreme weight added to the boat that results in a reduction of RPM/Speed.

Equipped with Flo-Torq II Hub Kit 835257K 6
PVS Enabled - Comes standard with plugs removed for best performance

FURY PROPELLER



48-8M8023120
14 x 24 Pitch RH SS 3 BL

48-8M8023140
14 x 25 Pitch RH SS 3 BL

48-8M8023160
14 x 26 Pitch RH SS 3 BL

48-8M8023180
14 x 27 Pitch RH SS 3 BL

FURY 4

The wait is over, the Fury 4 is here. The Fury 4 is a new propeller designed to be the quickest accelerating and fastest running propeller on heavily weighted bass boats for both the tournament angler as well as the every day fisherman using 200+ horsepower outboards.

In addition to utilizing the added strength and durability of the Mercury's proprietary X7 alloy, the Fury 4 contains 8 PVS holes (2 per blade) to allow optimal holeshot customization.
Fury 4 is available in 24, 25, and 26 pitch to dial in the ultimate performance of today's high horsepower bass boats. The same pitch is recommended if the current Tempest Plus or Fury allows the boat to operate in the desired RPM range.
Equipped with Flo-Torq II Hub Kit 835257K 6
Available in 2016

FURY 4 PROPELLER



48-8M0114408
14.5 x 24 Pitch RH SS 4 BL

48-8M0114409
14.5 x 25 Pitch RH SS 4 BL

48-8M0114410
14.5 x 26 Pitch RH SS 4 BL

TEMPEST PLUS

Are you ready to move up to the big leagues? If you're serious about speed, take a look at the Tempest Plus. Designed for large heavy bass boats, walleye boats and sport boats with big V-6 outboard power, the Tempest Plus 3-blade stainless steel propeller can take you to the next levelfast. 835257K6 hub kit included. Select Optimax Pro XS engines with 1 1/4 shafts require hub kit 840389K06.

For V-6 outboards

Large (14 5/8") diameter for high motor height installations

Great for outboard powered bass, walleye, and bay boats

Aggressive blade geometry for amazing lift

Equipped with PVS Performance Vent System

17" - 29" pitch

TEMPEST PLUS PROPELLER



48-825868A47
14.625 X 27 RH SS 3 BL

48-825874A47
14 5/8 X 26 RH SS 3 BL

48-825866A47
14.625 X 25 RH SS 3 BL

48-825872A47
14 5/8 X 24 RH SS 3 BL

48-825865A47
14.625 x 23 in. LH SS 3 BL

48-825864A47
14.625 X 23 RH SS 3 BL

48-8M8026820
14.625 X 22 RH SS 3 BL

48-825862A47
14.625 X 21 RH SS 3 BL

48-825860A47
14 5/8 X 19 RH SS 3 BL

48-8M8026790
14.625 X 17 RH SS 3 BL

TROPHY PLUS

Want to get your fishing boat on plane fast? Check out the Trophy Plus. The Trophy Plus is legendary for its amazing hole shots and eye-watering acceleration. Its four stainless steel blades stay hooked up better in tight turns, making for incredible boat handling. For use with mid-range and V-6 Outboards up to 225 HP. 835257K6 hub kit included.

17 and 19 Pitch designed for 75-115 HP outboards. Higher pitch propellers designed for 135 HP -225 HP outboards

Quicker hole shots, great speed, particularly at high engine heights

Dramatically improves handling and reduces steering loads

Equipped with PVS - Performance Vent System

If engine RPM's are good with 3-blade prop, replace with the same pitch Trophy Plus

Small tube hub allows for added exhaust venting over the hub for improved hole shot

If venting is excessive, a seal ring 878421 allows the exhaust to pass through the inner hub.

MERCURY MARINE TROPHY PLUS

TROPHY PLUS PROPELLER



48-8M8026830
13 3/4 X 27 RH SS 4 BL

48-825944A47
13 3/4 X 26 RH SS 4 BL

48-825942A47
13 3/4 X 25 RH SS 4 BL

48-825940A48
13 3/4 X 24 RH SS 4 BL

48-825938A47
13 3/4 X 23 RH SS 4 BL

48-825934A47
13 3/4 X 21 RH SS 4 BL

48-825932A46
13 3/4 X 19 RH SS 4 BL

48-825930A46
13 3/4 X 17 RH SS 4 BL

LASER II

The Laser II is Mercury's Performance 3 blade propeller for freshwater fishing boats with 75-125 HP outboards. The Laser II features thin, high-rake stainless steel blades for outstanding bow lift.

NOTE: Laser II Propellers for 135 HP and up outboards and sterndrives have been discontinued. Mercury Marine recommends replacing these propellers with a Tempest Plus propeller of the equivalent pitch.

For outboards 75-125 HP
High-rake design for lots of lift
Thin blades to reduce drag
Equipped with PVS - Performance Vent System medium fittings
Right-hand rotation
Equipped with Flo-Torq II Hub kit 835257K 1

MERCURY MARINE Laser II

LASER II MERCURY/MARINER 40-60 BF, 75-125

Equipped with Flo-Torq II 835257K1.

LASER II PROPELLER



48- 16992A46
13 1/2 X 22 RH SS 3 BL

48-899006A46
13.25 X 21 RH SS 3 BL

48- 16990A46
13.25 X 20 RH SS 3 BL

48-899004A46
13 1/4 X 19 RH SS 3 BL

TROPHY SPORT

Do you have a 30-60 HP powered fishing boat? How'd you like to have the great hole shots and speed too? The Trophy Sport 4-blade stainless steel propeller brings out the best in flats, walleye and bass boats, and inflatables.

For 30-60 hp outboards

Fast planning, great speed

Improves handling and reduces steering loads

If engine RPM's are appropriate with 3-blade prop, replace with the same pitch Trophy Sport.

Equipped with Flo-Torq Reflex Hub system to eliminate clutch rattle.

12" - 15" pitch

MERCURY MARINE TROPHY Sport

TROPHY SPORT PROPELLER



48-878616A46
10 5/8 X 14 RH SS 4 BL

48-878614A46
10 5/8 X 13 RH SS 4 BL

48-878612A46
10 5/8 X 12 RH SS 4 BL

MIRAGE PLUS

The Mirage Plus 3-blade stainless steel propeller dominates high-horsepower boating with its large diameter and high output blade geometry. From V-6 Outboard offshore fishing boats to Bravo I Sterndrive vee-bottom sport boats, cruisers and race boats, the Mirage Plus does it allquickly.

Equipped with Flo-Torq II Hub kit 835257K1(A46)

-The Flo-Torq II SS (Solid) Hub kit 835258K 2 is available for separate purchase
-The Flo-Torq II 1 1/4" HD SS (Solid) Hub kit 840389K06 is available for separate purchase
For outboards over 150 HP on offshore fishing boats, Bay boats and V-bottom sportboats

For V-8 single or dual Bravo One and TRS sterndrives

Specifically designed to handle high horsepower

Improves acceleration and top speed on many boats

Equipped with PVS - Performance Vent System solid fittings installed for outboard applications replace with medium fittings

Left-hand and right-hand rotation

13" - 27" pitch

MERCURY MARINE MIRAGE plus

MIRAGE PLUS PROPELLER



48- 18280A46
14 3/8 X 27 RH SS 3 BL

48- 18281A46
14 3/8 X 27 LH SS 3 BL

48- 13706A46
14 1/2 X 25 RH SS 3 BL

48- 13707A46
14 1/2 X 25 LH SS 3 BL

48- 13704A46
14 5/8 X 23 RH SS 3 BL

48- 13705A46
14 5/8 X 23 LH SS 3 BL

48- 13702A46
14 3/4 X 21 RH SS 3 BL

48- 13703A46
14 3/4 X 21 LH SS 3 BL

48- 13700A46
15 1/4 X 19 RH SS 3 BL

48- 13701A46
15 1/4 X 19 LH SS 3 BL

48-889620A46
15 3/8 X 18 RH SS 3 BL
48-889619A46
15 3/8 X 18 LH SS 3 BL
48- 18278A46
15 1/2 X 17 RH SS 3 BL
48- 90159A46
15 1/2 X 17 LH SS 3 BL
48- 19838A46
15 3/4 X 15 RH SS 3 BL
48- 19841A46
15 3/4 X 15 LH SS 3 BL
48-826072A46
16 X 13 RH SS 3 BL

ENERTIA ECO

The Enertia ECO, a pioneering propeller that will significantly improve fuel economy at cruising speeds on high horse-powered boats running with 200+ HP. Ideal for long distance running center consoles, the Enertia ECO's large diameter and high progressive rake provide additional bow lift reducing boat drag. While saving money at cruising speeds, the Enertia ECO shows no compromise in performance, sporting the class leading performance inherent to all Mercury Propellers.

Benefits of the Enertia ECO:
-10%+ gains in fuel economy at cruising speeds
-No Compromise in performance
-Smoother ride as it provides additional bow lift
-Superior durability with Mercury's X7 Alloy
-Eligible to be used with Mercury's Joystick Piloting for outboards

Equipped with PVS – Performance Vent System solid fittings
Left and right-hand rotation, 17 – 23 Pitch in 1" increments
Recommended on single to quad engine offshore and bay fishing boats with min 200 HP
Equipped with Flo-Torq II Hub kit 835257K1

-To reduce shift noise/vibration, the Flo-Torq SSR HD 1 1/4" Hub kit (8M0101601) is available for separate purchase

ENERTIA ECO PROPELLER



48-8M0040398
16 X 17 RH SS 3 BL
48-8M0040399
16 X 17 LH SS 3 BL
48-8M0040396
16 X 18 RH SS 3 BL
48-8M0040397
16 X 18 LH SS 3 BL
48-8M0040400
16 X 19 RH SS 3 BL
48-8M0040401
16 X 19 LH SS 3 BL
48-8M0040406
16 X 20 RH SS 3 BL
48-8M0040407
16 X 20 LH SS 3 BL
48-8M0040402
16 X 21 RH SS 3 BL
48-8M0040403
16 X 21 LH SS 3 BL
48-8M0040408
16 X 22 RH SS 3 BL
48-8M0040409
16 X 22 LH SS 3 BL
48-8M0040404
16 X 23 RH SS 3 BL
48-8M0040405
16 X 23 LH SS 3 BL

ENERTIA ECO XP

The Enertia ECO XP, for extreme precision when dialing in your outboard engines rpm maximizing performance and fuel economy at cruising speeds. Ideal for long distance running center consoles, the Enertia ECO XP's large diameter and high progressive rake provide additional bow lift reducing boat drag. Benefits include 10 percent fuel gains, durable X7 alloy and eligible for Joy Stick Piloting outboards.

Recommended on single to quad engine center console and bay boats with min 200 HP.
Equipped with Flo-Torq II Hub kit 835257K1.

The Flo-Torq II SS (Solid) Hub kit 835258K 2 and Flo-Torq II 1 1/4" HD SS (Solid) Hub kit 840389K06 are available for separate purchase.

ENERTIA ECO XP PROPELLER



48-8M0108357
16 x 22.5 LH SS 3 BL
48-8M0108354
16 x 22.5 RH SS 3 BL
48-8M0108353
16 x 20.5 LH SS 3 BL
48-8M0108352
16 x 20.5 RH SS 3 BL
48-8M0108351
16 x 18.5 LH SS 3 BL
48-8M0108350
16 x 18.5 RH SS 3 BL

48-8M0110303
16 x 16.5 LH SS 3 BL
48-8M0110304
16 x 16.5 RH SS 3 BL

REVOLUTION 4

The Revolution 4-blade stainless steel propeller hooks up the power for V-6 outboard walleye, pontoon and single or dual center console and sterndrive pontoon, sportboats and single or dual performance boats. Excellent holding and speed.

For V-6 outboards and Alpha and Bravo One and TRS sterndrives

Improves mid-range

Strong acceleration and top speed

Equipped with PVS - Performance Vent System solid fittings for sterndrive applications, for outboard applications replace with medium PVS fittings
If RPM's are at the upper end of the range with a 3-blade prop, use a Revolution 4 of the same pitch. If the RPM's are at the mid to low end of the RPM range with a 3-blade prop, use a Revolution 4 of the next lower pitch.

Right and left-hand rotation

15" - 25" pitch
Equipped with Flo-Torq II Hub kit 835257K6

-The Flo-Torq II SS (Solid) Hub kit 835258K 2 is available for separate purchase
-The Flo-Torq II 1 1/4" HD SS (Solid) Hub kit 840389K06 is available for separate

MERCURY MARINE Revolution 4

REVOLUTION 4 PROPELLER



48-857032A46
14.625 x 25 RH SS 4 BL
48-857033A46
14.625 x 25 LH SS 4 BL
48-857030A46
14 5/8 X 23 RH SS 4 BL
48-857031A46
14 5/8 X 23 LH SS 4 BL
48-857028A46
14 5/8 X 21 RH SS 4 BL
48-857029A46
14 5/8 X 21 LH SS 4 BL
48-8M0070052
14 5/8 X 20 RH SS 4 BL
48-8M0070051
14 5/8 X 20 LH SS 4 BL
48-857026A46
14 5/8 X 19 RH SS 4 BL
48-857027A46
14 5/8 X 19 LH SS 4 BL
48-857024A46
14 5/8 X 17 RH SS 4 BL
48-857025A46
14 5/8 X 17 LH SS 4 BL
48-857022A46
14-5/8 x 15 RH SS 4 BL
48-8M0064449
14-5/8 x 15 LH SS 4 BL

REVOLUTION 4 XC

The Mercury Racing Revolution 4 XC 4-blade stainless steel propellers are designed for single outboard powered Flats and Flat Cat hulls requiring tremendous planing performance in shallow water. The added cup enables the XC to stay hooked up at elevated engine heights ideal for scouting fish. Excellent holding with some sacrifice to speed.

Equipped with PVS - Performance Vent System
Expect the engine rpm to drop 200 to 300 comparing to equivalent pitch Rev 4
Hub Kit sold separate
-For 1 inch Mercury prop shaft use Hub kit 835257K6 or SS (Solid) Hub kit 835258K 2
-For 1.25 inch Mercury prop shaft use HD Hub kit 840389K06 or 840389Q06

REVOLUTION 4 XC



48-8M0111925
14.8 x 17 RH SS Pro Finished
48-8M0111924
14.8 x 15 RH SS Pro Finished

REVOLUTION 4 XP

The Mercury Racing Revolution 4 XP stainless steel propellers with one half pitch increments are designed to fine tune the engines RPM maximizing performance. Using the XP with the 400R Verado expect 75 to 100 RPM change per one half of pitch.
Equipped with PVS - Performance Vent System
Hub Kit sold separate835257K6

- For Mercury 1 inch prop shaft use Hub kit 835257K6 or SS (Solid) Hub kit 835258K 2
- For Mercury 1.25 inch prop shaft use Hub kit HD SS Hub kit 840389K06 or 840389Q06

REVOLUTION 4 XP



48-8M0113959
14.6 x 25.5 LH SS Pro Finished

48-8M0113958
14.6 x 25.5 RH SS Pro Finished

48-8M0113957
14.6 x 25 LH SS Pro Finished

48-8M0113956
14.6 x 25 RH SS Pro Finished

48-8M0113955
14.6 x 24.5 LH SS Pro Finished

48-8M0113954
14.6 x 24.5 RH SS Pro Finished

48-8M0113953
14.6 x 24 LH SS Pro Finished

48-8M0113952
14.6 x 24 RH SS Pro Finished

48-8M0113951
14.6 x 23.5 LH SS Pro Finished

48-8M0113950
14.6 x 23.5 RH SS Pro Finished

48-8M0113949
14.6 x 23 LH SS Pro Finished

48-8M0113948
14.6 x 23 RH SS Pro Finished

48-8M0113947
14.6 x 22.5 LH SS Pro Finished

48-8M0113946
14.6 x 22.5 RH SS Pro Finished

48-8M0113945
14.6 x 22 LH SS Pro Finished

48-8M0113944
14.6 x 22 RH SS Pro Finished

48-8M0113943
14.6 x 21.5 LH SS Pro Finished

48-8M0113942
14.6 x 21.5 RH SS Pro Finished

48-8M0113941
14.6 x 21 LH SS Pro Finished

48-8M0113940
14.6 x 21 RH SS Pro Finished

48-8M0113939
14.6 x 20.5 LH SS Pro Finished

48-8M0113938
14.6 x 20.5 LH SS Pro Finished

48-8M0113937
14.6 x 20 LH SS Pro Finished

48-8M0113936
14.6 x 20 RH SS Pro Finished

48-8M0113935
14.6 x 21.5 LH SS Pro Finished

48-8M0113934
14.6 x 19.5 RH SS Pro Finished

48-8M0113933
14.6 x 19 LH SS Pro Finished

48-8M0113932
14.6 x 19 RH SS Pro Finished

48-8M0113931
14.6 x 18.5 LH SS Pro Finished

48-8M0113930
14.6 x 18.5 RH SS Pro Finished

48-8M0113929
14.6 x 18 LH SS Pro Finished

48-8M0113928
14.6 x 18 RH SS Pro Finished

REVOLUTION 4 LAB FINISHED

Mercury Racing Lab Finished Revolution 4 has been upgraded to feature a high luster finish for 2016, the prop is designed to increase speed for multi-center console boats. Expect to gain 150 rpm over the stock Rev 4. Hub kit sold separately; 835258K2 for 1 inch and 840389K06 or 840389Q06 for 1.25 inch propshaft.

REVOLUTION 4 LAB FINISH PROPELLER



48-857027L55
14.6 x 19 LH SS Lab Finished - Polished

48-857026L55
14.6 x 19 RH SS Lab Finished - Polished

48-8M0106547
14.6 x 20 LH SS Lab Finished - Polished

48-8M0106548
14.6 x 20 RH SS Lab Finished - Polished

48-857029L55
14.6 x 21 LH SS Lab Finished - Polished

48-857028L55
14.6 x 21 RH SS Lab Finished - Polished

48-8M0106545
14.6 x 22 LH SS Lab Finished - Polished

48-8M0106546
14.6 x 22 RH SS Lab Finished - Polished

48-857031L55
14.6 x 23 LH SS Lab Finished - Polished

48-857030L55
14.6 x 23 RH SS Lab Finished - Polished
48-8M0106543
14.6 x 24 LH SS Lab Finished - Polished
48-8M0106544
14.6 x 24 RH SS Lab Finished - Polished
48-857033L55
14.6 x 25 LH SS Lab Finished - Polished
48-857032L55
14.6 x 25 RH SS Lab Finished - Polished

VENSURA

The VenSura is an outstanding performer for your 18" - 22" stern drive runabout. The VenSura prop runs smoother and planes you boat quicker than standard 3-blade propellers also hold the boat on plane at lower speeds - great for wake-boarding.
Equipped with Flo-Torq II 835257K1
For 225 FS and non-Mercury applications see Flo-Torq II reference chart
Outboard - For light-weight twin 135-225 HP
MerCruiser - For bow-rider and sport boats 3.0L - 5.7L Alpha sterndrives
High gloss stainless steel
Equipped with PVS - Performance Vent System solid fittings for sterndrive application, for outboards replace with medium fittings
Left-hand and right-hand rotation
17" - 23" pitch

VenSura MERCURY MARINE

VENSURA PROPELLER



48-825907A48
14 X 23 LH SS 4 BL
48-825902A48
14 X 21 RH SS BL
48-825903A48
14 X 21 LH SS 4 BL
48-825900A48
14 X 19 RH SS 4 BL
48-825901A48
14 X 19 LH SS 4 BL
48-825898A48
14 X 17 RH SS 4 BL
48-825899A48
14 X 17 LH SS 4 BL

HIGHFIVE

If you've thought about trading your runabout for a tow boat, first try the HiFive.
Five blades creates massive amounts of surface area to transfer your engine's power to acceleration. The HighFive also has a loyal followig among freshwater fishermen who fish in rough water due to the excellent handling of the 5-blade design - A HighFive will stay hooked up when the going gets rough. The design also makes the HighFive an excellent choice for back trolling.
If engine RPMs are good with a 3-blade prop, replace with same pitch HighFive
Equipped with PVS - Performance Vent System
17" - 25" pitch
Equipped with Flo-Torq II Hub kit 835257K 1

MERCURY MARINE HIGHFIVE

HIGHFIVE PROPELLER



48-815762A46
13 1/4 X 23 RH SS 5 BL
48-815760A46
13 1/4 X 21 RH SS 5 BL
48-815758A46
13 1/4 X 19 RH SS 5 BL
48-821154A46
13 1/2 X 17 RH SS 5 BL

BRAVO I

The best just keep getting bigger and better! High horsepower boats need high-output propellers and the Bravo I 4-blade stainless steel propellers are the original Equipment on more go-fast boats than any other props!

For high-performance, high drive height, outboard and sterndrive applications
Excellent speed and handling, Great for stepped hulls and cats
Moving from a 3-blade to the Bravo I, drop down one inch in pitch (22"Bravo I for 23" 3-blade Mirage)

Available with Flo-Torq II: A45 series equipped with 835257K6, A55 with 835258K2 and A65 with 840389K06 for XZ/XR sterndrives.

22" to 36" Left-hand and right-hand rotation

MERCURY MARINE BRAVO I

BRAVO I PROPELLER



48-832124A55
15 1/4 X 36 RH SS 4 BL (Solid Hub)

48-832124A65
15 1/4 X 36 RH SS 4 BL (HD 1 1/4 in. Solid Hub)

48-832123A55
15 1/4 X 36 LH SS 4 BL (Solid Hub)

48-832123A65
15 1/4 X 36 LH SS 4 BL (HD 1 1/4 in. Solid Hub)

48-832122A55
15 1/4 X 34 RH SS 4 BL (Solid Hub)

48-832122A65
15 1/4 X 34 RH SS 4 BL (HD 1 1/4 in. Solid Hub)

48-832121A55
15 1/4 X 34 LH SS 4 BL (Solid Hub)

48-832121A65
15 1/4 X 34 LH SS 4 BL (HD 1 1/4 in. Solid Hub)

48-831920A55
15 1/4 X 32 RH SS 4 BL (Solid Hub)

48-831920A65
15 1/4 X 32 RH SS 4 BL (HD 1 1/4 in. Solid Hub)

48-831919A55
15 1/4 X 32 LH SS 4 BL (Solid Hub)

48-831919A65
15 1/4 X 32 LH SS 4 BL (HD 1 1/4 in. Solid Hub)

48-831918A55
15 1/4 X 30 RH SS 4 BL (Solid Hub)

48-831918A65
15 1/4 X 30 RH SS 4 BL (HD 1 1/4 in. Solid Hub)

48-831917A55
15 1/4 X 30 LH SS 4 BL (Solid Hub)

48-831917A65
15 1/4 X 30 LH SS 4 BL (HD 1 1/4 in. Solid Hub)

48-831916A55
15 1/4 X 28 RH SS 4 BL (Solid Hub)

48-831916A65
15 1/4 X 28 RH SS 4 BL (HD 1 1/4 in. Solid Hub)

48-831915A55
15 1/4 X 28 LH SS 4 BL (Solid Hub)

48-831915A65
15 1/4 X 28 LH SS 4 BL (HD 1 1/4 in. Solid Hub)

48-831914A45
15 1/4 X 26 RH SS 4 BL

48-831914A55
15 1/4 X 26 RH SS 4 BL (Solid Hub)

48-831914A65
15 1/4 X 26 RH SS 4 BL (HD 1 1/4 in. Solid Hub)

48-831913A45
15 1/4 X 26 LH SS 4 BL

48-831913A55
15 1/4 X 26 LH SS 4 BL (Solid Hub)

48-831913A65
15 1/4 X 26 LH SS 4 BL (HD 1 1/4 in. Solid Hub)

48-831912A45
15 1/4 X 24 RH SS 4 BL

48-831912A55
15 1/4 X 24 RH SS 4 BL (Solid Hub)

48-831912A65
15 1/4 X 24 RH SS 4 BL (HD 1 1/4 in. Solid Hub)

48-831911A45
15 1/4 X 24 LH SS 4 BL

48-831911A55
15 1/4 X 24 LH SS 4 BL (Solid Hub)

48-831911A65
15 1/4 X 24 LH SS 4 BL (HD 1 1/4 in. Solid Hub)

48-831910A45
15 1/4 X 22 RH SS 4 BL

48-831910A55
15 1/4 X 22 RH SS 4 BL (Solid Hub)

48-831910A65
15 1/4 X 22 RH SS 4 BL (HD 1 1/4 in. Solid Hub)

48-831909A45
15 1/4 X 22 LH SS 4 BL

48-831909A55
15 1/4 X 22 LH SS 4 BL (Solid Hub)

48-831909A65
15 1/4 X 22 LH SS 4 BL (HD 1 1/4 in. Solid Hub)

BRAVO I XS PRO FINISHED

New for 2016 Mercury Racing is offering additional even one half pitch for extreme precision when dialing in engine rpm for maximized performance. The upgraded (8) PVS vent holes are offering improved time-to-plane. The four blades offer staying on plane during slow switchback turns, great rough water handling, excellent mid-range acceleration and the tuned exhaust tube provides bow and stern lift for awesome top ends speeds all features for heavy and fully loaded walleye, bass, flats and some ultra-high speed bass boats. Designed for 150 to 400 HP outboards primaruy target is Pro XS and XS engines and now with the controllable venting system four stroke outbards may benfit with the one half pitch offerings.
Pitch selection, if running a 26 inch pitch 3 blade Tempest move one inch pitch higher to 27 inch pitch Bravo I XS, if replacing the Fury, Revolution 4 or standard Bravo I move up 2 inch of pitch.
PVS solid and large vent hole fittings included. Hub kit sold separately; 835257K6 or 835258K2 for 1 inch propshaft or for 1.25 inch propshaft use 840389K06 or 840389Q06.

BRAVO I XS PROPELLER



48-8M0100109
15.25 x 31.5 RH SS 4 BL

48-831918L80
15.25 x 31 RH SS 4 BL

48-8M0111151
15.25 x 30.5 RH SS 4 BL

48-831918L60
15.25 x 30 RH SS 4 BL
48-8M0100107
15.25 x 29.5 RH SS 4 BL
48-831916L80
15.25 x 29 RH SS 4 BL
48-8M0111150
15.25 x 28.5 RH SS 4 BL
48-831916L60
15.25 x 28 RH SS 4 BL
48-8M0100106
15.25 x 27.5 RH SS 4 BL
48-831914L80
15.25 x 27 RH SS 4 BL
48-8M0111149
15.25 x 26.5 RH SS 4 BL
48-831914L60
15.25 x 26 RH SS 4 BL
48-8M0100105
15.25 x 25.5 RH SS 4 BL
48-831912L80
15.25 x 25 RH SS 4 BL
48-8M0111148
15.25 x 24.5 RH SS 4 BL
48-831912L60
15.25 x 24 RH SS 4 BL
48-8M0100104
15.25 x 23.5 RH SS 4 BL
48-831910L80
15.25 x 23 RH SS 4 BL
48-8M0111147
15.25 x 22.5 RH SS 4 BL
48-831910L60
15.25 x 22 RH SS 4 BL

BRAVO I XC PRO FINISHED

The Mercury Racing Bravo I XC Pro Finished propellers are designed for shallow water running requiring quick planing and durable trailing edges. Equipped with PVS allowing exhaust adjustment for planing, extended barrel to support quick hole shot and extra trailing edge cup for greater durability. Hub kit sold separately, 835257K6 or 835258K2 for 1 inch or 840389K06 for 1.25 inch propshaft.

BRAVO I XC PROPELLER



48-8M0100110
15.25 x 20 RH SS 4 BL
48-8M0100111
15.25 x 22 RH SS 4 BL
48-8M0100112
15.25 x 24 RH SS 4 BL

BRAVO I FS PRO FINISHED

The Mercury Racing Bravo I FS Pro Finished propellers are designed for outboard and sterndrive applications. The 4 blades deliver unmatched time-to-plane performance, mid-range punch, delivering fuel sipping economy, and excellent top-end speeds for medium to heavy outboard bass, flats, cat flats, bay boats, center consoles and sterndrive deck and vee bottom boats. A majority of four stroke outboards and sterndrive applications will use the prop with all four vent holes plugged with solid PVS fittings. Larger heavier multiple engine applications may benefit by taking one or two fittings out for improved planing.
The Bravo IFS may be used with multiple two stroke outboard applications and the 20 and 21 inch pitch can be used with single two stroke rigs with all the PVS fittings removed.
To achieve similar rpm if running a 26 pitch 3 blade move up one inch to a 27 pitch Bravo I FS, if replacing the Fury or Revolution 4 move up 2 inches of pitch.
Hub kit sold separately; 835257K6 or 835258K2 for 1 inch or 840389K06 for 1.25 inch propshaft.

BRAVO I FS PROPELLER



48-8M0104419
15.25 x 33 RH SS 4 BL
48-8M0104420
15.25 x 33 LH SS 4 BL
48-8M0104417
15.25 x 32 RH SS 4 BL
48-8M0104418
15.25 x 32 LH SS 4 BL
48-8M0064477
15.25 x 31 RH SS 4 BL
48-8M0071097
15.25 x 31 LH SS 4 BL
48-8M0064476
15.25 x 30 RH SS 4 BL
48-8M0071096
15.25 x 30LH SS 4 BL
48-8M0064475
15.25 x 29 RH SS 4 BL
48-8M0071095
15.25 x 29 LH SS 4 BL
48-8M0064473
15.25 x 28 RH SS 4 BL
48-8M0071094
15.25 x 28 LH SS 4 BL
48-8M0064472
15.25 x 27 RH SS 4 BL
48-8M0071093
15.25 x 27 LH SS 4 BL
48-8M0064471
15.25 x 26 RH SS 4 BL
48-8M0071092
15.25 x 26 LH SS 4 BL
48-8M0064470
15.25 x 25 RH SS 4 BL

48-8M0071091
15.25 x 25 LH SS 4 BL
48-8M0064469
15.25 x 24 RH SS 4 BL
48-8M0071090
15.25 x 24 LH SS 4 BL
48-8M0064468
15.25 x 23 RH SS 4 BL
48-8M0071089
15.25 x 23 LH SS 4 BL
48-8M0064450
15.25 x 22 RH SS 4 BL
48-8M0071088
15.25 x 22 LH SS 4 BL
48-8M0090455
15.25 x 21 RH SS 4 BL
48-8M0090457
15.25 x 21 LH SS 4 BL
48-8M0090451
15.25 x 20 RH SS 4 BL
48-8M0090453
15.25 x 20 LH SS 4 BL

BRAVO I OC LAB FINISHED

The Mercury Racing Bravo I OC high polised Lab Finished propellers are designed for up to 400 HP Outboard Catamarans equipped with Sport Master gearcase. The four blades with dual PVS vent holes offer excellant planing, great handling, awesome mid-range acceleration and the tuned shortened exhaust tube provides bow and minimal stern lift for awesome top end speed. Hub kit sold separately, 840389K06 for 1.25 inch propshaft.

BRAVO 1 OC PROPELLER



48-8M0092016
14.75 x 35 RH SS 4 BL Lab Finished
48-8M0092017
14.75 x 35 LH SS 4 BL Lab Finished
48-8M0092014
14.75 x 34 RH SS 4 BL Lab Finished
48-8M0092015
14.75 x 34 LH SS 4 BL Lab Finished
48-8M0092012
14.75 x 33 RH SS 4 BL Lab Finished
48-8M0092013
14.75 x 33 LH SS 4 BL Lab Finished
48-8M0092010
14.75 x 32 RH SS 4 BL Lab Finished
48-8M0092011
14.75 x 32 LH SS 4 BL Lab Finished
48-8M0092008
14.75 x 31 RH SS 4 BL Lab Finished
48-8M0092009
14.75 x 31 LH SS 4 BL Lab Finished
48-8M0092006
14.75 x 30 RH SS 4 BL Lab Finished
48-8M0092007
14.75 x 30 LH SS 4 BL Lab Finished
48-8M0092004
14.75 x 29 RH SS 4 BL Lab Finished
48-8M0092005
14.75 x 29 LH SS 4 BL Lab Finished
48-8M0092002
14.75 x 28 RH 4 BL Lab Finished
48-8M0092003
14.75 x 28 LH SS 4 BL Lab Finished

BRAVO I VENTED LAB FINISHED

Mercury Racing Polished Lab Finished Vented Bravo I propellers designed for high-performance, high gearcase height 2 Stroke outboard applications. Excellent top speeds, great handling, good mid-range speeds and awesome planing performance for Flats, Bass boats, Vee, or Step hulls. The dual adjustable PVS vent holes per blade provides ventilation to rev up the outboard for planing performance. Propellers equipped with long barrel. Hub kit sold separately, 835258K2 for one inch propshaft, 840389K06 or 840389Q06 for 1.25 inch propshaft.

BRAVO I VENTED LAB FINISHED PROPELLER



48-832123L66
15.25 x 36 LH SS Polished Lab Finished
48-832124L66
15.25 x 36 RH SS Polished Lab Finished
48-832121L66
15.25 x 34 LH SS Polished Lab Finished
48-832122L66
15.25 x 34 RH SS Polished Lab Finished
48-831919L66
15.25 x 32 LH SS Polished Lab Finished
48-831920L66
15.25 x 32 RH SS Polished Lab Finished
48-831917L66
15.25 x 30 LH SS Polished Lab Finished
48-831918L66
15.25 x 30 RH SS Polished Lab Finished
48-831915L46
15.25 x 29 LH SS Polished Lab Finished
48-831916L46
15.25 x 29 RH SS Polished Lab Finished
48-831915L66
15.25 x 28 LH SS Polished Lab Finished
48-831916L66
15.25 x 28 RH SS Polished Lab Finished
48-831913L46
15.25 x 27 LH SS Polished Lab Finished

48-831914L46
15.25 x 27 RH SS Polished Lab Finished
48-831913L66
15.25 x 26 LH SS Polished Lab Finished
48-831914L66
15.25 x 26 RH SS Polished Lab Finished
48-831911L46
15.25 x 25 LH SS Polished Lab Finished
48-831912L46
15.25 x 25 RH SS Polished Lab Finished
48-831911L66
15.25 x 24 LH SS Polished Lab Finished
48-831912L66
15.25 x 24 RH SS Polished Lab Finished
48-831909L46
15.25 x 23 LH SS Polished Lab Finished
48-831910L46
15.25 x 23 RH SS Polished Lab Finished
48-831909L66
15.25 X 22 LH SS Polished Lab Finished
48-831910L66
15.25 x 22 RH SS Polished Lab Finished

BRAVO I LAB FINISHED

Mercury Racing Polished Lab Finished Bravo I propellers are designed for high-performance, high gearcase drive height Verado outboard and Bravo I, Sport and Sport Master sterndrive applications. Excellent top speeds, great handling, good mid-range speeds and great planing performance for Vee, Cats and Step hulls.
Hub kits sold separately, 835258K2 for 1 inch and 840389K06 for 1.25 inch propshaft.

BRAVO I LAB FINISHED PROPELLER



48-832123L45
15.25 X 37 LH SS Polished Lab Finished
48-832123L65
15.25 X 36 LH SS Polished Lab Finished
48-832124L45
15.25 X 37 RH SS Polished Lab Finished
48-832124L65
15.25 X 36 RH SS Polished Lab Finished
48-832121L45
15.25 X 35 LH SS Polished Lab Finished
48-832122L45
15.25 X 35 RH SS Polished Lab Finished
48-832121L65
15.25 X 34 LH SS Polished Lab Finished
48-832122L65
15.25 X 34 RH SS Polished Lab Finished
48-831919L45
15.25 X 33 LH SS Polished Lab Finished
48-831920L45
15.25 X 33 RH SS Polished Lab Finished
48-831919L65
15.25 X 32 LH SS Polished Lab Finished
48-831920L65
15.25 X 32 RH SS Polished Lab Finished
48-831917L45
15.25 X 31 LH SS Polished Lab Finished
48-831918L45
15.25 X 31 RH SS Polished Lab Finished
48-831917L65
15.25 X 30 LH SS Polished Lab Finished
48-831918L65
15.25 X 30 RH SS Polished Lab Finished
48-831915L45
15.25 X 29 LH SS Polished Lab Finished
48-831916L45
15.25 X 29 RH SS Polished Lab Finished
48-831915L65
15.25 X 28 LH SS Polished Lab Finished
48-831916L65
15.25 X 28 RH SS Polished Lab Finished
48-831913L45
15.25 X 27 LH SS Polished Lab Finished
48-831914L45
15.25 X 27 RH SS Polished Lab Finished
48-831913L65
15.25 X 26 LH SS Polished Lab Finished
48-831914L65
15.25 X 26 RH SS Polished Lab Finished
48-831911L45
15.25 x 25 LH SS Polished Lab Finished
48-831912L45
15.25 x 25 RH SS Polished Lab Finished
48-831911L65
15.25 X 24 LH SS Polished Lab Finished
48-831912L65
15.25 X 24 RH SS Polished Lab Finished
48-8M0073457
15.25 X 23 LH, SS Polished Lab Finished
48-8M0073456
15.25 X 23 RH SS Polished Lab Finished
48-831909L65
15.25 X 22 LH SS Polished Lab Finished
48-831910L65
15.25 X 22 RH SS Polished Lab Finished

MAXIMUS

The new 5-blade performance propeller ideally suited to push large aerated, vee-bottom performance hulls and offshore boats equipped with MerCrusier 496 HO, Mercury Racing 500+ horsepower engines coupled to Bravo One, Bravo One XZ or XR sterndrives. Available in limited pitch range, the Maximus will ultimately be available in 26" - 36" L/H & R/H (2" pitch increments). In general if RPM's are at the upper end of the engines range run two inches of pitch less than the Bravo I 4-blade propeller-example if runnigh 34" stock Bravo I try running 32" stock Maximus.

Available with Flo-Torq II SS Hub kit for the Bravo One 1" prop shaft 835258K 2 (A55 series)

Available with Flo -Torq II SS HD Hub kit for Bravo One XZ/XR and Bravo XR Sport Master (A65 series)

5 Blades for awesome planing performance higher mid-range cruising and equal or better top end speeds over 4 blades

30" - 32" LH & RH (26" & 28" TBD)

MAXIMUS
MERCURY MARINE

MAXIMUS PROPELLER



48-889973A65
15 5/8 X 34 LH SS 5 BL Equipped with 1 1/4" HD SS Hub Kit

48-889973A65
15 5/8 X 34 LH SS 5 BL Equipped with 1 1/4" HD SS Hub Kit

48-889972A65
15 5/8 X 34 RH SS 5 BL Equipped with 1 1/4" HD SS Hub Kit

48-889972A65
15 5/8 X 34 RH SS 5 BL Equipped with 1 1/4" HD SS Hub Kit

48-889971A65
15 5/8 X 32 LH SS 5 BL Equipped with 1 1/4" HD SS Hub Kit

48-889970A65
15 5/8 X 32 RH SS 5 BL Equipped with 1 1/4" HD SS Hub Kit

48-889969A65
15.625 X 30 LH SS 5 BL Equipped with 1.25 inch HD SS Hub Kit

48-889968A65
15 5/8 X 30 RH SS 5 BL Equipped with 1 1/4" HD SS Hub Kit

48-889967A65
15 5/8 X 28 LH SS 5 BL Equipped with 1 1/4" HD SS Hub Kit

48-889966A65
15 5/8 X 28 RH SS 5 BL Equipped with 1 1/4" HD SS Hub Kit

48-889965A65
15 5/8 X 26 LH SS 5 BL Equipped with 1 1/4" HD SS Hub Kit

48-889964A65
15 5/8 X 26 RH SS 5 BL Equipped with 1 1/4" HD SS Hub Kit

48-889975A65
15 5/8 X 24 LH SS 5 BL Equipped with 1 1/4" HD SS Hub Kit

48-889974A65
15 5/8 X 24 RH SS 5 BL Equipped with 1 1/4" HD SS Hub Kit

MAXIMUS ST PRO FINISHED

300-600 HP

Mercury Racing Pro Finished designed for high-performance, high gearcase drive height for sterndrive and outboard applications. Excellent top speeds, great handling, good mid-range speeds and eye popping planing performance for V bottoms, Cats and Step hulls.

Barrel length is 7.875 inches reducing stern lift. Hub kits sold seperate, for 1.25 inch prop shaft use 840389K06 HD Hub kit and for 1 inch prop shaft use hub kit 835258K 2. If using full 15.625 inch diameter with the XR Sport Master Shorty the anti-cavitation plate must be removed.

MAXIMUS ST PROPELLER



48-8M0091989
15.3 x 34 LH SS 5 BL

48-8M0092001
15.6 x 34 LH SS 5 BL

48-8M0091988
15.3 x 34 RH SS 5 BL

48-8M0092000
15.6 x 34 RH SS 5 BL

48-8M0091987
15.3 x 32 LH SS 5 BL

48-8M0091999
15.6 x 32 LH SS 5 BL

48-8M0091986
15.3 x 32 RH SS 5 BL

48-8M0091998
15.6 x 32 RH SS 5 BL

48-8M0091985
15.3 x 30 LH SS 5 BL

48-8M0091997
15.6 x 30 LH SS 5 BL

48-8M0091984
15.3 x 30 RH SS 5 BL

48-8M0091996
15.6 x 30 RH SS 5 BL

48-8M0091983
15.3 x 28 LH SS 5 BL

48-8M0091995
15.6 x 28 LH SS 5 BL

48-8M0091982
15.3 x 28 RH SS 5 BL

48-8M0091994
15.6 x 28 RH SS 5 BL

48-8M0091981
15.3 x 26 LH SS 5 BL

48-8M0091993
15.6 x 26 LH SS 5 BL

48-8M0091980
15.3 x 26 RH SS 5 BL
48-8M0091992
15.6 x 26 RH SS 5 BL
48-8M0091979
15.3 x 24 LH SS 5 BL
48-8M0091991
15.6 x 24 LH SS 5 BL
48-8M0091978
15.3 x 24 RH SS 5 BL
48-8M0091990
15.6 x 24 RH SS 5 BL

MAXIMUS LONG TUBE LAB FINISHED

300-600 HP

Mercury Racing Lab Finished Maximus propellers are designed for high-performance, high gearcase drive height sterndrive applications. Excellent top speeds, great handling, good mid-range speeds and eye popping planing performance for V bottoms, Cats and Step hulls. This is the prop of choice for reducing high slip with Step hulls.

Barrel lenght is 8.5 inches, adds stern lift. Hub kits are sold seperate, for 1.25 inch prop shaft use 840389K06 HD Hub kit. If using with 1 inch prop shaft use hub kit 835258K 2. If using full 15.625 inch diameter with the XR Sport Master Shorty the anti-cavitation plate must be removed.

MAXIMUS LONG TUBE LAB FINISHED PROPELLER



48-889973L85
15.625 X 35 LH, SS 5 BL Lab (Satin) Finished.
48-889973L84
15.25 X 35 LH, SS 5 BL Lab (Satin) Finished.
48-889972L85
15.625 X 35 RH, SS 5 BL Lab (Satin) Finished.
48-889972L84
15.25 X 35 RH, SS 5 BL Lab (Satin) Finished.
48-889973L65
15.625 X 34 LH, SS 5 BL Lab (Satin) Finished.
48-889973L64
15.25 X 34 LH, SS 5 BL Lab (Satin) Finished.
48-889973L63
15 X 34 LH, SS 5 BL Lab (Satin) Finished.
48-889972L65
15.625 X 34 RH, SS 5 BL Lab (Satin) Finished.
48-889972L64
15.25 X 34 RH, SS 5 BL Lab (Satin) Finished.
48-889972L63
15.625 X 34 RH, SS 5 BL Lab (Satin) Finished.
48-889973L45
15.625 X 33 LH, SS 5 BL Lab (Satin) Finished.
48-889973L44
15.25 X 33 LH, SS 5 BL Lab (Satin) Finished.
48-889972L45
15.625 X 33 RH, SS 5 BL Lab (Satin) Finished.
48-889972L44
15.25 X 33 RH, SS 5 BL Lab (Satin) Finished.
48-889971L65
15.625 X 32 LH, SS 5 BL Lab (Satin) Finished.
48-889971L64
15.25 X 32 LH, SS 5 BL Lab (Satin) Finished.
48-889971L63
15 X 32 LH, SS 5 BL Lab (Satin) Finished.
48-889970L65
15.625 X 32 RH, SS 5 BL Lab (Satin) Finished.
48-889970L64
15.25 X 32 RH, SS 5 BL Lab (Satin) Finished.
48-889970L63
15 X 32 RH, SS 5 BL Lab (Satin) Finished.
48-889971L45
15.625 X 31 LH, SS 5 BL Lab (Satin) Finished.
48-889971L44
15.25 X 31 LH, SS 5 BL Lab (Satin) Finished.
48-889970L45
15.625 X 31 RH, SS 5 BL Lab (Satin) Finished.
48-889970L44
15.25 X 31 RH, SS 5 BL Lab (Satin) Finished.
48-889969L65
15.625 X 30 LH, SS 5 BL Lab (Satin) Finished.
48-889969L64
15.25 X 30 LH, SS 5 BL Lab (Satin) Finished.
48-889969L63
15 X 30 LH, SS 5 BL Lab (Satin) Finished.
48-889968L65
15.625 X 30 RH, SS 5 BL Lab (Satin) Finished.
48-889968L64
15.25 X 30 RH, SS 5 BL Lab (Satin) Finished.
48-889968L63
15 X 30 RH, SS 5 BL Lab (Satin) Finished.
48-889969L45
15.625 X 29 LH, SS 5 BL Lab (Satin) Finished.
48-889969L44
15.25 X 29 LH, SS 5 BL Lab (Satin) Finished.
48-889968L45
15.625 X 29 RH, SS 5 BL Lab (Satin) Finished.
48-889968L44
15.25 X 29 RH, SS 5 BL Lab (Satin) Finished.
48-889967L65
15.625 X 28 LH, SS 5 BL Lab (Satin) Finished.
48-889967L64
15.25 X 28 LH, SS 5 BL Lab (Satin) Finished.
48-889967L63
15 X 28 LH, SS 5 BL Lab (Satin) Finished.
48-889966L65
15.625 X 28 RH, SS 5 BL Lab (Satin) Finished.
48-889966L64
15.25 X 28 RH, SS 5 BL Lab (Satin) Finished.
48-889966L63
15 X 28 RH, SS 5 BL Lab (Satin) Finished.
48-889967L45
15.625 X 27 LH, SS 5 BL Lab (Satin) Finished.
48-889967L44
15.25 X 27 LH, SS 5 BL Lab (Satin) Finished.
48-889966L45
15.625 X 27 RH, SS 5 BL Lab (Satin) Finished.
48-889966L44
15.25 X 27 RH, SS 5 BL Lab (Satin) Finished.

48-889965L65
15.625 X 26 LH, SS 5 BL Lab (Satin) Finished.
48-889965L64
15.25 X 26 LH, SS 5 BL Lab (Satin) Finished.
48-889965L63
15 X 26 LH, SS 5 BL Lab (Satin) Finished.
48-889964L65
15.625 X 26 RH, SS 5 BL Lab (Satin) Finished.
48-889964L64
15.25 X 26 RH, SS 5 BL Lab (Satin) Finished.
48-889964L63
15 X 26 RH, SS 5 BL Lab (Satin) Finished.
48-889965L45
15.625 X 25 LH, SS 5 BL Lab (Satin) Finished.
48-889965L44
15.25 X 25 LH, SS 5 BL Lab (Satin) Finished.
48-889964L45
15.625 X 25 RH, SS 5 BL Lab (Satin) Finished.
48-889964L44
15.25 X 25 RH, SS 5 BL Lab (Satin) Finished.
48-889975L65
15.625 X 24 LH, SS 5 BL Lab (Satin) Finished.
48-889975L64
15.25 X 24 LH, SS 5 BL Lab (Satin) Finished.
48-889975L63
15 X 24 LH, SS 5 BL Lab (Satin) Finished.
48-889974L65
15.625 X 24 RH, SS 5 BL Lab (Satin) Finished.
48-889974L64
15.25 X 24 RH, SS 5 BL Lab (Satin) Finished.
48-889974L63
15 X 24 RH, SS 5 BL Lab (Satin) Finished.
48-889975L45
15.625 X 23 LH, SS 5 BL Lab (Satin) Finished.
48-889975L44
15.25 X 23 LH, SS 5 BL Lab (Satin) Finished.
48-889974L45
15.625 X 23 RH, SS 5 BL Lab (Satin) Finished.
48-889974L44
15.25 X 23 RH, SS 5 BL Lab (Satin) Finished.

MAXIMUS SHORT TUBE LAB FINISHED

300-600 HP

Mercury Racing Lab Finished Maximus propellers are designed for high-performance, high gearcase drive height sterndrive applications. Excellent top speeds, great handling, good mid-range speeds and eye popping planing performance for V bottoms, Cats and Step hulls. This is the prop of choice for reducing high slip with Step hulls.

Barrel length is 7.875 inches reduces stern lift. Hub kits sold seperate, for 1.25 inch prop shaft use 840389K06 HD Hub kit and for 1 inch prop shaft use hub kit 835258K 2. If using full 15.625 inch diameter with the XR Sport Master Shorty the anti-cavitation plate must be removed.

MAXIMUS SHORT TUBE LAB FINISHED PROPELLER



48-889973L89
15.63 X 35 LH, SS 5 BL Lab (Satin) Finished.
48-889973L88
15.25 X 35 LH, SS 5 BL Lab (Satin) Finished.
48-889972L89
15.63 X 35 RH, SS 5 BL Lab (Satin) Finished.
48-889972L88
15.25 X 35 RH, SS 5 BL Lab (Satin) Finished.
48-889973L69
15.63 X 34 LH, SS 5 BL Lab (Satin) Finished.
48-889973L68
15.25 X 34 LH, SS 5 BL Lab (Satin) Finished.
48-889973L67
15 X 34 LH, SS 5 BL Lab (Satin) Finished.
48-889972L69
15.63 X 34 RH, SS 5 BL Lab (Satin) Finished.
48-889972L68
15.25 X 34 RH, SS 5 BL Lab (Satin) Finished.
48-889972L67
15 X 34 RH, SS 5 BL Lab (Satin) Finished.
48-889973L49
15.63 X 33 LH, SS 5BL Lab (Satin) Finished.
48-889973L48
15.25 X 33 LH, SS 5 BL Lab (Satin) Finished.
48-889972L49
15.63 X 33 RH, SS 5BL Lab (Satin) Finished.
48-889972L48
15.25 X 33 RH, SS 5 BL Lab (Satin) Finished.
48-889971L69
15.63 X 32 LH, SS 5BL Lab (Satin) Finished.
48-889971L68
15.25 X 32 LH, SS 5BL Lab (Satin) Finished.
48-889971L67
15 X 32 LH, SS 5BL Lab (Satin) Finished.
48-889970L69
15.63 X 32 RH, SS 5BL Lab (Satin) Finished.
48-889970L68
15.25 X 32 RH, SS 5BL Lab (Satin) Finished.

48-889970L67
15 X 32 RH, SS 5BL Lab (Satin) Finished.
48-889971L49
15.63 X 31 LH, SS 5BL Lab (Satin) Finished.
48-889971L48
15.25 X 31 LH, SS 5BL Lab (Satin) Finished.
48-889970L49
15.63 X 31 RH, SS 5BL Lab (Satin) Finished.
48-889970L48
15.25 X 31 RH, SS 5BL Lab (Satin) Finished.
48-889969L69
15.63 X 30 LH, SS 5BL Lab (Satin) Finished.
48-889969L68
15.25 X 30 LH, SS 5BL Lab (Satin) Finished.
48-889969L67
15 X 30 LH, SS 5BL Lab (Satin) Finished.
48-889968L69
15.63 X 30 RH, SS 5BL Lab (Satin) Finished.
48-889968L68
15.25 X 30 RH, SS 5BL Lab (Satin) Finished.
48-889968L67
15 X 30 RH, SS 5BL Lab (Satin) Finished.
48-889969L49
15.63 X 29 LH, SS 5BL Lab (Satin) Finished.
48-889969L48
15.25 X 29 LH, SS 5BL Lab (Satin) Finished.
48-889968L49
15.63 X 29 RH, SS 5BL Lab (Satin) Finished.
48-889968L48
15.25 X 29 RH, SS 5BL Lab (Satin) Finished.
48-889967L69
15.63 X 28 LH, SS 5BL Lab (Satin) Finished.
48-889967L68
15.25 X 28 LH, SS 5BL Lab (Satin) Finished.
48-889967L67
15 X 28 LH, SS 5BL Lab (Satin) Finished.
48-889966L69
15.63 X 28 RH, SS 5BL Lab (Satin) Finished.
48-889966L68
15.25 X 28 RH, SS 5BL Lab (Satin) Finished.
48-889966L67
15 X 28 RH, SS 5BL Lab (Satin) Finished.
48-889967L49
15.63 X 27 LH, SS 5BL Lab (Satin) Finished.
48-889967L48
15.25 X 27 LH, SS 5BL Lab (Satin) Finished.
48-889966L49
15.63 X 27 RH, SS 5BL Lab (Satin) Finished.
48-889966L48
15.25 X 27 RH, SS 5BL Lab (Satin) Finished.
48-889965L69
15.63 X 26 LH, SS 5BL Lab (Satin) Finished.
48-889965L68
15.25 X 26 LH, SS 5BL Lab (Satin) Finished.
48-889965L67
15 X 26 LH, SS 5BL Lab (Satin) Finished.
48-889964L69
15.63 X 26 RH, SS 5BL Lab (Satin) Finished.
48-889964L68
15.25 X 26 RH, SS 5BL Lab (Satin) Finished.
48-889964L67
15 X 26 RH, SS 5BL Lab (Satin) Finished.
48-889965L49
15.63 X 25 LH, SS 5BL Lab (Satin) Finished.
48-889965L48
15.25 X 25 LH, SS 5BL Lab (Satin) Finished.
48-889964L49
15.63 X 25 RH, SS 5BL Lab (Satin) Finished.
48-889964L48
15.25 X 25 RH, SS 5BL Lab (Satin) Finished.
48-889975L69
15.63 X 24 LH, SS 5BL Lab (Satin) Finished.
48-889975L68
15.25 X 24 LH, SS 5BL Lab (Satin) Finished.
48-889975L67
15 X 24 LH, SS 5BL Lab (Satin) Finished.
48-889974L69
15.63 X 24 RH, SS 5BL Lab (Satin) Finished.
48-889974L68
15.25 X 24 RH, SS 5BL Lab (Satin) Finished.
48-889974L67
15 X 24 RH, SS 5BL Lab (Satin) Finished.
48-889975L49
15.63 X 23 LH, SS 5BL Lab (Satin) Finished.
48-889975L48
15.25 X 23 LH, SS 5BL Lab (Satin) Finished.
48-889974L49
15.63 X 23 RH, SS 5BL Lab (Satin) Finished.
48-889974L48
15.25 X 23 RH, SS 5BL Lab (Satin) Finished.

BRAVO TWO - ALUMINUM

Our Bravo Two propellers are big and beefy - just like our Bravo Two sterndrive itself. Incredible amounts of blade area for maximum thrust.
Large blade area for increased efficiency
Right and left-hand rotation
Equipped with Flo-Torq I rubber hub 43636T
Forward Cupped washer 12-55072
Tab Washer 14-34817
Aft Cupped Washer 12-54738
Prop Nut 11-54034
Forward Thrust Washer 55074T
Aft Washer 12-55073A2
11" - 25" pitch

Bravo Two
MERCURY MARINE

BRAVO TWO PROPELLER



48- 18620A40
17 1/4 X 25 RH Alum 3 BL
48- 18621A40
17 1/4 X 25 LH Alum 3 BL
48- 18618A40
17 1/2 X 23 RH Alum 3 BL

48- 18619A40
17 1/2 X 23 LH Alum 3 BL
48- 18616A40
17 3/4 X 21 RH Alum 3 BL
48- 18617A40
17 3/4 X 21 LH Alum 3 BL
48- 18614A40
18 1/4 X 19 RH Alum 3 BL
48- 18615A40
18 1/4 X 19 LH Alum 3 BL
48- 18612A40
18 3/4 X 17 RH Alum 3 BL
48- 18613A40
18 3/4 X 17 LH Alum 3 BL
48- 18610A40
19 1/4 X 15 RH Alum 3 BL
48- 18611A40
19 1/4 X 15 LH Alum 3 BL
48- 18608A40
19 1/2 X 13 RH Alum 3 BL
48- 18609A40
19 1/2 X 13 LH Alum 3 BL
48- 18606A40
20 X 11 RH Alum 3 BL
48- 18607A40
20 X 11 LH Alum 3 BL

BRAVO TWO - STAINLESS STEEL

Our Bravo Two propellers are big and beefy - just like our Bravo Two sterndrive itself. Incredible amounts of blade area for maximum thrust.
Large blade area for increased efficiency
Right and left-hand rotation
Equipped with Flo-Torq I rubber hub 43636T
Forward Cupped washer 12-55072
Tab Washer 14-34817
Aft Cupped Washer 12-54738
Prop Nut 11-54034
Forward Thrust Washer 55074T
Aft Washer 12-55073A2
11" - 25" pitch

Bravo Two
MERCURY MARINE

BRAVO TWO PROPELLER



48- 18620A 6
17.25 X 25 RH SS 3 BL
48- 18621A 6
17 1/4 X 25 LH SS 3 BL
48- 18618A 6
17 1/2 X 23 RH SS 3 BL
48- 18619A 6
17 1/2 X 23 LH SS 3 BL
48-897550A06
19 1/2 x 22 1/2 RH SS 3 BL
48- 18616A 6
17 3/4 X 21 RH SS 3 BL
48- 18617A 6
17 3/4 X 21 LH SS 3 BL
48- 18614A 6
18 1/4 X 19 RH SS 3 BL
48- 18615A 6
18 1/4 X 19 LH SS 3 BL
48- 18612A 6
18 3/4 X 17 RH SS 3 BL
48- 18613A 6
18 3/4 X 17 LH SS 3 BL
48- 18610A 6
19 1/4 X 15 RH SS 3 BL
48- 18611A 6
19 1/4 X 15 LH SS 3 BL
48- 18608A 6
19 1/2 X 13 RH SS 3 BL
48- 18609A 6
19 1/2 X 13 LH SS 3 BL
48- 18606A 6
20 X 11 RH SS 3 BL
48- 18607A 6
20 X 11 LH SS 3 BL

BRAVO THREE

This amazing twin-prop drive system features stainless steel props: A large diameter forward propeller and a smaller diameter aft propeller for unbelievable handling and boat control.

Bravo Three features 4-blade front, 3-blade rear set that offers better acceleration performance and enhanced holding. Bravo Three is available in both matte and high polish finishes. Mixing with old style three blade front three blade rear Bravo Three propellers is not recommended. For part number information on the old Bravo Three propellers (Pre 2008) see the historical propeller charts section of this guide.

Aft Thrust Washer 805100T
Forward Thrust Washer 805101T
Aft Prop Nut 11-805093
Forward Prop Nut 11-805092T

19" - 28" pitch.

MERCURY BRAVO Three

BRAVO THREE PROPELLER



48-8M8022460
15 X 28 LH SS 4 BL - Front Matte Finish

48-8M8022470
13.5 X 28 RH SS 3 BL - Rear Matte Finish

48-8M8022469
15 X 28 LH SS 4 BL - Front High Polish Finish

48-8M8022479
13.5 X 28 RH SS 3 BL - Rear High Polish Finish

48-8M8022440
15.25 X 26 LH SS 4 BL - Front Matte Finish

48-8M8022450
13.75 X 26 RH SS 3 BL - Rear Matte Finish

48-8M8022449
15.25 X 26 LH SS 4 BL - Front High Polish Finish

48-8M8022459
13.75 X 26 RH SS 3 BL - Rear High Polish Finish

48-8M8022420
15.5 X 24 LH SS 4 BL - Front Matte Finish

48-8M8022430
14 X 24 RH SS 3 BL - Rear Matte Finish

48-8M8022429
15.5 X 24 LH SS 4 BL - Front High Polish Finish

48-8M8022439
14 X 24 RH SS 3 BL - Rear High Polish Finish

48-8M8022400
15.75 X 22.5 LH SS 4 BL - Front Matte Finish

48-8M8022410
14.25 X 22.5 RH SS 3 BL - Rear Matte Finish

48-8M8022409
15.75 X 22.5 LH SS 4 BL - Front High Polish Finish

48-8M8022419
14.25 X 22.5 RH SS 3 BL - Rear High Polish Finish

48-8M8022380
15.9 X 21 LH SS 4 BL - Front Matte Finish

48-8M8022390
14.3 X 21 RH SS 3 BL - Rear Matte Finish

48-8M8022389
15.9 X 21 LH SS 4 BL - Front High Polish Finish

48-8M8022399
14.3 X 21 RH SS 3 BL - Rear High Polish Finish

48-8M8022360
16 X 20 LH SS 4 BL - Front Matte Finish

48-8M8022370
14.4 X 20 RH SS 3 BL - Rear Matte Finish

48-8M8022369
16 X 20 LH SS 4 BL - Front High Polish Finish

48-8M8022379
14.4 X 20 RH SS 3 BL - Rear High Polish Finish

48-8M8022340
16 X 19 LH SS 4 BL - Front Matte Finish

48-8M8022350
14.4 X 19 RH SS 3 BL - Rear Matte Finish

48-8M8022349
16 X 19 LH SS 4 BL - Front High Polish Finish

48-8M8022359
14.4 X 19 RH SS 3 BL - Rear High Polish Finish

BRAVO THREE DIESEL

Designed for use on heavier boats high HP diesels. A large diameter four-blade front propeller coupled with a smaller diameter, three-blade rear propeller provides unmatched acceleration, tracking and handling with diesel applications. Extra cup built in to the trailing edges of both front and rear props captures the torque generated by today's turbocharged diesel engines. Best performing propeller for modern diesel engines matched to Bravo III drives.

Key Features:
Left-hand, 4-blade forward and right-hand, 3-blade rear propellers.
Enhanced blade cup for improved planing performance and fuel economy.
Recommended for 260-350 H.P. diesel engines.
Fit for use on standard Bravo Three, Bravo Three X and Bravo Three XR drives.
Sets available from 21" to 27" pitch in two inch increments
Bravo Three Diesel Propellers feature a durable matte finish
Moving from the standard Bravo Three propellers to the Bravo Three Diesel props will result in one inch pitch decrease to match the same RPM.

BRAVO THREE DIESEL



48-8M0074865
16.0 x 21 LH SS 4 Blade - Front

48-8M0074866
15.0 x 21 RH SS 3 Blade - Rear

48-8M0074867
16.0 x 23 LH SS 4 Blade - Front

48-8M0074868
15.0 x 23 RH SS 3 Blade - Rear

48-8M0074869
15.75 x 25 LH SS 4 Blade - Front

48-8M0074870
14.75 x 25 RH SS 3 Blade - Rear

48-8M0074871
15.5 x 27 LH SS 4 Blade - Front

48-8M0074872
14.5 x 27 RH SS 3 Blade - Rear

BRAVO THREE XR PRO FINISHED

Designed for 250-525 horsepower gas and diesel powered sport cruisers and performance Bravo Three applications. A large diameter 4 blade forward propeller followed by a smaller diameter 3 blade aft propeller feature built in cup for incredible handling, improved fuel economy at cruise and boat control. Intended for the Bravo Three XR drive and can be used with the Bravo Three and Bravo Three X drives. The even pitch is made from the odd pitch casting; Mercury Racing adds additional cup for increased holding. The Pro Finish provides a performance leading edge, consistant cup heights, zero balanced for minimal vibration and durable high luster finish.
As a general rule the odd pitch numbered Bravo Three XR propellers run similar engine RPM to the next higher pitch even numbered Bravo Three propellers. For example the Bravo Three XR 27 pitch matches the RPM of a Bravo Three 28 pitch.

BRAVO THREE XR PRO FINISHED PROPELLER



48-842945L80
15.5 x 28 LH SS 4 BL High Gloss - Front

48-842946L80
14.5 x 28 RH, SS 3 BL High Gloss - Rear

48-842945L70
15.5 x 27 LH, SS 4 BL High Gloss - Front

48-842946L70
14.5 x 27 RH, SS 3 BL High Gloss - Rear

48-842943L80
15.75 X 26 LH, SS 4 BL High Gloss - Front

48-842944L80
14.75 X 26 RH, SS 3 BL High Gloss - Rear

48-842943L70
15.75 x 25 LH, SS 4 BL High Gloss - Front

48-842944L70
14.75 x 25 RH, SS 3 BL High Gloss - Rear

48-842941L80
16 X 24 LH, SS 4 BL High Gloss - Front

48-842942L80
15 X 24 RH, SS 3 BL High Gloss - Rear

48-842941L70
16 x 23 LH, SS 4 BL High Gloss - Front

48-842942L70
15 x 23 RH, SS 3 BL High Gloss - Rear

48-8M0073458
16 x 22 LH SS 4 BL High Gloss - Front

48-8M0073459
15 x 22 RH SS 3 BL High Gloss - Rear

48-842939L70
16 x 21 LH SS 4 BL High Gloss - Front

48-842940L70
15 x 21 RH SS 3 BL High Gloss - Rear

Z - SERIES PROPELLER

Original equipment for Zeus pod drives up to 550 HP. A large diameter 4 blade forward propeller and a smaller diameter 3 blade aft propeller provides outstanding acceleration and boat control. These props come in a tough matte finish.

ZEUS PROPELLER



48-8M8021430
Z6 4 Blade LH Front Propeller

48-8M8021440
Z6 3 Blade RH Rear Propeller

48-8M8021450
Z7 4 Blade LH Front Propeller

48-8M8021460
Z7 3 Blade RH Rear Propeller

48-8M8021470
Z8 4 Blade LH Front Propeller

48-8M8021480
Z8 3 Blade RH Rear Propeller

48-8M8021490
Z9 4 Blade LH Front Propeller

48-8M8021500
Z9 3 Blade RH Rear Propeller

48-8M8021510
Z10 4 Blade LH Front Propeller

48-8M8021520
Z10 3 Blade RH Rear Propeller

48-8M8021530
Z11 4 Blade LH Front Propeller

48-8M8021540
Z11 3 Blade RH Rear Propeller

48-8M8021550
Z12 4 Blade LH Front Propeller

48-8M8021560
Z12 3 Blade RH Rear Propeller

48-8M8023600
Z13 4 Blade LH Front Propeller

48-8M8023610
Z13 3 Blade RH Rear Propeller

48-8M8021590
Z14 4 Blade LH Front Propeller

48-8M8021600
Z14 3 Blade RH Rear Propeller

48-8M8021610
Z15 4 Blade LH Front Propeller

48-8M8021620
Z15 3 Blade RH Rear Propeller

48-8M8021630
Z16 4 Blade LH Front Propeller

48-8M8021640
Z16 3 Blade RH Rear Propeller

48-8M8021650
Z17 4 Blade LH Front Propeller
48-8M8021660
Z17 3 Blade RH Rear Propeller
48-8M8021670
Z18 4 Blade LH Front Propeller
48-8M8021680
Z18 3 Blade RH Rear Propeller
48-8M8021690
Z19 4 Blade LH Front Propeller
48-8M8021700
Z19 3 Blade RH Rear Propeller

M - SERIES PROPELLER

Original equipment on select Zeus pod drives up to 700 HP. Additional blade area vs. Z series props is an excellent fit for higher horsepower Zeus applications. These props come in a tough matte finish.

M-SERIES PROPELLER



48-8M0079236
M0 5 Blade LH Front Propeller
48-8M0079237
M0 4 Blade RH Rear Propeller
48-8M0063951
M1 5 Blade LH Front Propeller
48-8M0063952
M1 4 Blade RH Rear Propeller
48-8M8024110
M2 5 Blade LH Front Propeller
48-8M8024120
M2 4 Blade RH Rear Propeller
48-8M8023800
M4 5 Blade LH Front Propeller
48-8M8023810
M4 4 Blade RH Rear Propeller
48-8M8023820
M5 5 Blade LH Front Propeller
48-8M8023830
M5 4 Blade RH Rear Propeller
48-8M8023840
M6 5 Blade LH Front Propeller
48-8M8023850
M6 4 Blade RH Rear Propeller
48-8M8023860
M7 5 Blade LH Front Propeller
48-8M8023870
M7 4 Blade RH Rear Propeller
48-8M8023880
M8 5 Blade LH Front Propeller
48-8M8023890
M8 4 Blade RH Rear Propeller
48-8M8023900
M9 5 Blade LH Front Propeller
48-8M8023910
M9 4 Blade RH Rear Propeller
48-8M8023920
M10 5 Blade LH Front Propeller
48-8M8023930
M10 4 Blade RH Rear Propeller
48-8M8023940
M11 5 Blade LH Front Propeller
48-8M8023950
M11 4 Blade RH Rear Propeller
48-8M8023960
M12 5 Blade LH Front Propeller
48-8M8023970
M12 4 Blade RH Rear Propeller
48-8M8023980
M13 5 Blade LH Front Propeller
48-8M8023990
M13 4 Blade RH Rear Propeller
48-8M8024000
M14 5 Blade LH Front Propeller
48-8M8024010
M14 4 Blade RH Rear Propeller

H - SERIES PROPELLERS

Original equipment propellers for small pod drives. A large diameter 5 blade forward propeller and a smaller diameter 4 blade aft propeller provides outstanding control and acceleration. These propellers come in a tough matte finish.

H SERIES PROPELLER



48-8M0074191
H6 5 Blade LH Front Propeller
48-8M0074192
H6 4 Blade RH Rear Propeller
48-8M0074193
H7 5 Blade LH Front Propeller
48-8M0074194
H7 4 Blade RH Rear Propeller
48-8M0074195
H8 5 Blade LH Front Propeller
48-8M0074196
H8 4 Blade RH Rear Propeller
48-8M0074197
H9 5 Blade LH Front Propeller
48-8M0074198
H9 4 Blade RH Rear Propeller
48-8M0074199
H10 5 Blade LH Front Propeller
48-8M0074200
H10 4 Blade RH Rear Propeller
48-8M0074201
H11 5 Blade LH Front Propeller

48-8M0074202
H11 4 Blade RH Rear Propeller
48-8M0074203
H12 5 Blade LH Front Propeller
48-8M0074204
H12 4 Blade RH Rear Propeller
48-8M0074205
H13 5 Blade LH Front Propeller
48-8M0074206
H13 4 Blade RH Rear Propeller
48-8M0074207
H14 5 Blade LH Front Propeller
48-8M0074208
H14 4 Blade RH Rear Propeller

HX SERIES PROPELLER

48-8M0074209
HX15 5 Blade LH Front Propeller - Large Blade Area
48-8M0074210
HX15 4 Blade RH Rear Propeller - Large Blade Area
48-8M0074211
HX16 5 Blade LH Front Propeller - Large Blade Area
48-8M0074212
HX16 4 Blade RH Rear Propeller - Large Blade Area
48-8M0074213
HX17 5 Blade LH Front Propeller - Large Blade Area
48-8M0074214
HX17 4 Blade RH Rear Propeller - Large Blade Area

CHOPPER II - MERCURY 20 - 25 HP

CHOPPER II PROPELLER



48- 43592A61
10.375 Diameter X 18 Pitch, RH rotation, 10 spline, rubber hub (19669T) - uses thrust hub 858498

CHOPPER II - MERCURY 30 (U.S. ORIGIN) AND 40 - 60 HP

CHOPPER II PROPELLER



48- 43592A71
10.375 Diameter X 18 Pitch, RH rotation, 13 spline, rubber hub (43676T) - uses thrust hub 73345A1

CHOPPER II - MERCURY 115 - 300 HP

Fits Mercury 4.25, 4.75 inch gearcases. Made from the new X7 alloy, rated to 300 HP. Check trim tab for propeller clearance.

Hub kit not included; 835258K 1 for 1 inch and 840389K06 for 1.25 inch propshaft.

CHOPPER II PROPELLER



48-849359A62
14.50 X 32 LH, Stainless Steel, 3 Blade
48-849358A62
14.50 X 32 RH, Stainless Steel, 3 Blade
48-849357A62
14.50 x 30 LH, Stainless Steel, 3 Blade
48-849356A62
14.50 X 30 RH, Stainless Steel, 3 Blade
48- 13373A62
14.50 X 28 LH, Stainless Steel, 3 Blade
48- 13372A62
14.50 X 28 RH, Stainless Steel, 3 Blade
48- 13371A62
14.50 X 26 LH, Stainless Steel, 3 Blade
48- 13370A62
14.50 X 26 RH, Stainless Steel, 3 Blade
48- 13369A62
14.50 X 24 LH, Stainless Steel, 3 Blade
48- 13368A62
14.50 X 24 RH, Stainless Steel, 3 Blade
48- 13366A62
14.50 X 22 RH, Stainless Steel, 3 Blade

LIGHTNING E.T.

115-300 HP

Designed to run 60+ MPH, enhances bow lift (not as much as Chopper II) to reduce drag, possible higher engine heights, for use on high performance vee-bottom and air entrapment hulls. Fits Mercury 4.25, 4.75, Racing Torque Master & Sport Master gearcases. Made from the new X7 alloy, rated to 300 HP. Check trim tab for propeller clearance. As a general rule the Lightning ET 26 inch pitch runs similar engine RPM when using the 25 inch Trophy Plus.

Hub kit not included; 835258K 1 for 1 inch and 840389K06 for 1.25 inch propshaft.

LIGHTNING E.T. PROPELLER



48-849509L62
14.50 X 32 LH, Stainles Steel, 3 Blade

48-849508L62
14.50 X 32 RH, Stainless Steel, 3 Blade

48-849507L62
14.50 X 30 LH, Stainless Steel, 3 Blade

48-849506L62
14.50 x 30 RH, Stainless Steel, 3 Blade

48-849247L62
14.50 X 28 LH, Stainless Steel, 3 Blade

48-849248L62
14.50 X 28 RH, Stainless Steel, 3 Blade

48-849245L62
14.50 X 26 LH, Stainless Steel, 3 Blade

48-849246L62
14.50 X 26 RH, Stainless Steel, 3 Blade

48-849243L62
14.50 X 24 LH, Stainless Steel, 3 Blade

48-849244L62
14.50 X 24 RH, Stainless Steel, 3 Blade

48-849242L62
14.50 X 22 RH, Stainless Steel, 3 Blade

PRO E.T.®

For use with 150 - 300 HP Outboard motors. The Pro ET will be discontinuing and superseding to the Pro Max

Designed to run 70 plus MPH, enhances bow lift to reduce drag, possible higher engine heights, for use on high performance vee-bottom and air entrapment hulls. Fits Mercury 4.25, 4.75, Racing Torque Master & Sport Master gearcases.

Hub kit not included; 835258K 1 for 1 inch or 840389K06 for 1.25 inch propshaft.

PRO ET® PROPELLER



48-8M0006672
14.5 x 32 RH SS 4 BL Lab (Satin) Finished

48-8M0006662
14.5 x 32 RH SS 4 BL

48-8M0006670
14.5 x 30 RH SS 4 BL Lab (Satin) Finished

48-8M0006660
14.5 x 30 RH SS 4 BL

48-8M0006668
14.5 x 28 RH SS 4 BL Lab (Satin) Finished

48-8M0006658
14.5 x 28 RH SS 4 BL

PRO MAX®

For use with 115 - 400 HP Outboard motors. The Pro Max received an upgrade with (4) PVS vent holes.

Designed for high speed performance, enhances bow lift, possible higher engine heights, for use on performance vee-bottom and air entrapment hulls. Made from the X7 stainless steel alloy. Check trim tab for propeller clearance.

Pro Finished has a polished appearance with durable leading edges, robust blade thickness, tuned cup height and zero balanced. Lab Finished has a satin appearance, crisp leading edge, thinned blades, tuned cup height and zero balanced (expect to gain 150 RPM over Pro Finished, pitch for pitch).
To restrict venting during planing consider using the Vent Control Ring 8M0086395.
The Hub kit not included; 835257K6 or 835258K 2 for 1 inch or 840389K06 for 1.25 inch propshaft.

PRO MAX® PROPELLER



48-8M0079698
14.5 x 23 RH, X7 SS 4 BL

48-8M0079699
14.5 x 24 RH, X7 SS 4 BL

48-8M0079700
14.5 x 25 RH, X7 SS 4 BL

48-8M0079701
14.5 x 26 RH, X7 SS 4 BL

48-8M0079702
14.5 x 27 RH, X7 SS 4 BL

48-8M0079703
14.5 x 28 RH, X7 SS 4 BL

48-8M0079704
14.5 x 29 RH, X7 SS 4 BL

48-8M0079705
14.5 x 30 RH, X7 SS 4 BL

48-8M0079706
14.5 x 31 RH, X7 SS 4 BL

48-8M0079707
14.5 x 32 RH, X7 SS 4 BL

48-8M0079692
14.5 x 24 RH, X7 SS 4 BL Lab (Satin) Finished

48-8M0079693
14.5 x 26 RH, X7 SS 4 BL Lab (Satin) Finished

48-8M0079694
14.5 x 28 RH, X7 SS 4 BL Lab (Satin) Finished

48-8M0079695
14.5 x 30 RH, X7 SS 4 BL Lab (Satin) Finished

48-8M0079696
14.5 x 32 RH, X7 SS 4 BL Lab (Satin) Finished

CLEAVER 40 - 60 HP

The TE Cleaver has through hub exhaust, 13 tooth broached spline, uses standard thrust washer and prop nut kit 11-31990Q02.

CLEAVER PROPELLER 40-60 HP



48-891510A01
12 X 22 RH, 3 Blade, Stainless Steel

48-891510A02
11.50 X 22 RH, 3 Blade, Stainless Steel

48-891508A01
12 X 20 RH, 3 Blade, Stainless Steel

48-891508A02
11.50 X 20 RH, 3 Blade, Stainless Steel

48-891506A01
12 X 18 RH, 3 Blade, Stainless Steel

48-891506A02
11.50 X 18 RH, 3 Blade, Stainless Steel

48-891504A01
12 X 16 RH, 3 Blade, Stainless Steel

48-891504A02
11.50 X 16 RH, 3 Blade, Stainless Steel

48-891502A01
12 X 14 RH, 3 Blade, Stainless Steel

48-891502A02
11.50 X 14 RH, 3 Blade, Stainless Steel

CLEAVER 3 BLADE - OUTBOARD 115 - 300 HP

For use with Mercury 4.25, 4.75, Racing Torque Master and Sport Master gearcases. Made from the new X7 alloy, rated to 300 HP. Check trim tab for propeller clearance.

For 2016 only available in Lab Finished.

Hub kit not included, order separately 835258K 1 for 1 inch or 840389K06 for 1.25 inch propshaft.

CLEAVER PROPELLER



48- 19531L71
15 X 34 LH, Stainless Steel, 3 Blade, Lab Finish

48- 19532L71
15 X 34 RH, Stainless Steel, 3 Blade, Lab Finish

48- 19529L71
15 X 32 LH, Stainless Steel, 3 Blade, Lab Finish

48- 19530L71
15 X 32 RH, Stainless Steel, 3 Blade, Lab Finish

48- 19519L71
15 X 30 LH, Stainless Steel, 3 Blade, Lab Finish

48- 19520L71
15 X 30 RH, Stainless Steel, 3 Blade, Lab Finish

48- 19517L71
15 X 28 LH, Stainless Steel, 3 Blade, Lab Finish

48- 19518L71
15 X 28 RH, Stainless Steel, 3 Blade, Lab Finish

CNC CLEAVER 5 BLADE 15 DEGREE RAKE LAB FINISHED

600 HP, 900 HP, 1200 HP and 1550 HP
822974 Six and 8M drive bushing
822975 Retaining ring
11-826135 Nylon Insert, 8M0035647 Brass, 11-39817 Washer and nuts for SSM Six and M8
For use with Mercury Racing IIIA, IV, V, NXT (NXT1 requires hub kit 8M8022263 - sold separate), VI SSM and M8 Sterndrive. The CNC Pro Finish propellers have a 26 Spline hub with 1.75/1.88 inch (44.5/47.7mm) O.D. propeller shaft and 6 inch (152mm) hub length. The 15 degree rake propellers are designed specifically for step Vee hulls, diameters from 15 inch to 18 inch and pitch from 26 inch to 40 inch (custom order 41 and 42 inch pitch,14.5" diameters and limited 13 degree rake available - contact Mercury Racing).
If moving from the old style 5 blade Cleaver to the new style 5 blade CNC Cleaver generally move up 2 inch of pitch; example if old style was 17 x 33 move to 17 x 35 CNC Cleaver.

As a general rule for every 1 inch of pitch change, the effect will typically be 150 RPM change. For every .50 inch of diameter change, the effect will typically be 150 RPM change.

For a complete listing of part numbers see Mercury Racing Propeller chart section.

CNC CLEAVER 5 BLADE 18 DEGREE RAKE LAB FINISHED

600 HP, 900 HP, 1200 HP and 1550 HP
822974 Six and 8M drive bushing
822975 Retaining ring
11-826135 Nylon Insert, 8M0035647 Brass, 11-39817 Washer and nuts for SSM Six and M8
For use with Mercury Racing IIIA, IV, V, NXT (NXT1 requires hub kit 8M8022263 - sold separate), VI SSM and M8 Sterndrive. The CNC Pro Finish propellers have a 26 Spline hub with 1.75/1.88 inch (44.5/47.7mm) O.D. propeller shaft and 6 inch (152mm) hub length. Custom order 41 and 42 inch pitch available contact Mercury Racing. For a complete listing of part numbers see Mercury Racing Propeller chart section.

CNC CLEAVER 5 BLADE 21 DEGREE RAKE LAB FINISHED

600 HP, 900 HP, 1200 HP and 1550 HP
822974 Six and 8M drive bushing
822975 Retaining ring
11-826135 Nylon Insert, 8M0035647 Brass, 11-39817 Washer and nuts for SSM Six and M8
For use with Mercury Racing IIIA, IV, V, NXT (NXT1 requires hub kit 8M8022263 - sold separate), VI SSM and M8 Sterndrive. The CNC Pro Finish propellers have a 26 Spline hub with 1.75/1.88 inch (44.5/47.7mm) O.D. propeller shaft and 6 inch (152mm) hub length. Custom order 41 and 42 inch pitch available contact Mercury Racing. For a complete listing of part numbers see Mercury Racing Propeller chart section.

CNC CLEAVER 6 BLADE 15 DEGREE RAKE LAB FINISHED

600 HP, 900 HP, 1200 HP and 1550 HP(custom order) 822974
Six and 8M drive bushing 822975
Retaining ring
11-826135 Nylon Insert, 8M0035647 Brass, 11-39817 Washer and nuts for SSM Six and M8
For use with Mercury Racing IIIA, IV, V, NXT (NXT1 requires hub kit 8M8022263 - sold separate), VI SSM and M8 Sterndrive. The CNC Pro Finish propellers have a 26 Spline hub with 1.75/1.88 inch (44.5/47.7mm) O.D. propeller shaft and 6 inch (152mm) hub length. For a complete listing of part numbers see Mercury Racing Propeller chart section.

CNC CLEAVER 6 BLADE 18 DEGREE RAKE LAB FINISHED

600 HP, 900 HP, 1200 HP and 1550 HP(custom order)
822974 Six and 8M drive bushing
822975 Retaining ring
11-826135 Nylon Insert, 8M0035647 Brass, 11-39817 Washer and nuts for SSM Six and M8
For use with Mercury Racing IIIA, IV, V, NXT (NXT1 requires hub kit 8M8022263 - sold separate), VI SSM and M8 Sterndrive. The CNC Pro Finish propellers have a 26 Spline hub with 1.75/1.88 inch (44.5/47.7mm) O.D. propeller shaft and 6 inch (152mm) hub length. Custom order 41 and 42 inch pitch available contact Mercury Racing. For a complete listing of part numbers see Mercury Racing Propeller chart section.

CNC CLEAVER 6 BLADE 21 DEGREE RAKE LAB FINISHED

600 HP, 900 HP, 1200 HP and 1550 HP(custom order)
822974 Six and 8M drive bushing
822975 Retaining ring
11-826135 Nylon Insert, 8M0035647 Brass, 11-39817 Washer and nuts for SSM Six and M8
For use with Mercury Racing IIIA, IV, V, NXT (NXT1 requires hub kit 8M8022263 - sold separate), VI SSM and M8 Sterndrive. The CNC Pro Finish propellers have a 26 Spline hub with 1.75/1.88 inch (44.5/47.7mm) O.D. propeller shaft and 6 inch (152mm) hub length. Custom order 41 and 42 inch pitch available contact Mercury Racing. For a complete listing of part numbers see Mercury Racing Propeller chart section.

MERCURY RACING PROPELLER CHARTS

CLEAVER - 3 BLADE SS PROPELLER



3 Blade Stainless Steel Cleaver Outboard Propeller Chart

TE Cleavers for Mercury 40 to 60
with 13 spline Through Hub Exhaust. The A03 has been SS to the A02.

Diameter	Pitch	Stock Finished LH Rotation	Stock Finished RH Rotation
12	14	N/A	48-891502A01
11.50	14	N/A	48-891502A02
12	16	N/A	48-891504A01
11.50	16	N/A	48-891504A02
12	18	N/A	48-891506A01
11.50	18	N/A	48-891506A02
12	20	N/A	48-891508A01
11.50	20	N/A	48-891508A02
12	22	N/A	48-891510A01
11.50	22	N/A	48-891510A02

CLEAVER - 3 BLADE SS PROPELLER



3 Blade Stainless Steel Cleaver Outboard Propeller Chart

For 2016 only 15" diameter Lab Finished available. Hub Kit Sold Separately 835258K1 for 1 inch or 840389K06 for 1.25 inch Propshaft

Diameter	Pitch	LH Lab Finished	RH Lab Finished
15	28	48- 19517L71	48- 19518L71
15	30	48- 19519L71	48- 19520L71
15	32	48- 19529L71	48- 19530L71
15	34	48- 19531L71	48- 19532L71

CHOPPER II - 3 BLADE SS



3 Blade Stainless Steel - Chopper II - Outboard Propeller Chart

Mercury/Mariner 20-25
10 Spline, Rubber Hub Uses Thrust Hub 85128 1

Diameter	Pitch	Stock Finished LH Rotation	Stock Finished RH Rotation
10.375	18	N/A	48- 43592A61

3 Blade Stainless Steel - Chopper II - Outboard Propeller Chart

Mercury/Mariner 30 (US Origin) 40-50-60
13 Spline, Rubber Hub Uses Thrust Hub 73345A 1

Diameter	Pitch	Stock Finished LH Rotation	Stock Finished RH Rotation
10.375	18	N/A	48- 43592A71

3 Blade Stainless Steel - Chopper II - Outboard Propeller Chart

Mercury/Mariner V6
Hub Kit Sold Separately 835258K 1 for 1 inch and 840389K06 for 1.25 inch Propshaft

Diameter	Pitch	Stock Finished LH Rotation	Stock Finished RH Rotation
14.50	22	N/A	48- 13366A62
14.50	24	48- 13369A62	48- 13368A62
14.50	26	48- 13371A62	48- 13370A62
14.50	28	48- 13373A62	48- 13372A62
14.50	30	48-849357A62	48-849356A62
14.50	32	48-849359A62	48-849358A62

LIGHTNING E.T. - 3 BLADE SS



3 Blade Stainless Steel - Lightning E.T. - Outboard Propeller

Mercury/Mariner V6 Over the Hub Exhaust
Hub Kit Sold Separately 835258K1 for 1 inch and 840389K06 for 1.25 inch Propshaft

Diameter	Pitch	Lab Finished LH Rotation	Lab Finished RH Rotation
14.50	22	N/A	48-849242L62
14.50	24	48-849243L62	48-849244L62
14.50	26	48-849245L62	48-849246L62
14.50	28	48-849247L62	48-849248L62
14.50	30	48-849507L62	48-849506L62
14.50	32	48-849509L62	48-849508L62

PRO E.T.® - 4 BLADE STAINLESS STEEL



Pro E.T. ® - 4 Blade Stainless Steel Outboard Propeller Chart

The Pro ET will be discontinued superseding to the Pro Max. Hub Kit Sold Separately 835258K1 for 1 inch or 840389K06 for 1.25 inch Propshaft

Diameter (Inches)	Pitch	Blade	Pro Finished LH Rotation	Lab Finished LH Rotation	Pro Finished RH Rotation	Lab Finished RH Rotation
14.50	28	4	N/A	N/A	48-8M0006658	48-8M0006668
14.50	30	4	N/A	N/A	48-8M0006660	48-8M0006670
14.50	32	4	NLA	NLA	48-8M0006662	48-8M0006672

PRO MAX ® - 4 BLADE STAINLESS STEEL



Pro Max. ® 4 Blade Stainless Steel Outboard Propeller Chart

Outboard 115 to 400 HP Over and Through Hub Exhaust. Equipped with four PVS vent holes. For additional vent control use VCR Ring 8M0086395. Hub Kit Sold Separately: 835257K6 for 1 inch, high surfacing applications use 835258K2 for 1 inch.
and 840389K06 for 1.25 inch Propshaft.

Diameter (Inches)	Pitch	Blade	Pro Finished LH Rotation	Lab Finished LH Rotation	Pro Finished RH Rotation	Lab Finished RH Rotation
14.5	23	4	N/A	N/A	48-8M0079698	N/A
14.5	24	4	N/A	N/A	48-8M0079699	48-8M0079692
14.5	25	4	N/A	N/A	48-8M0079700	N/A
14.5	26	4	N/A	N/A	48-8M0079701	48-8M0079693
14.5	27	4	N/A	N/A	48-8M0079702	N/A
14.5	28	4	N/A	N/A	48-8M0079703	48-8M0079694
14.5	29	4	N/A	N/A	48-8M0079704	N/A
14.5	30	4	N/A	N/A	48-8M0079705	48-8M0079695
14.5	31	4	N/A	N/A	48-8M0079706	N/A

Diameter (Inches)	Pitch	Blade	Pro Finished LH Rotation	Lab Finished LH Rotation	Pro Finished RH Rotation	Lab Finished RH Rotation
14.5	32	4	N/A	N/A	48-8M0079707	48-8M0079696

BRAVO I XS PRO FINISHED



Bravo I XS Pro Finished Outboard

New one half pitch allows for customers to dial in their engine for maximum performance, expect 75 to 100 rpm change between each one half pitch. PVS solid and large vent hole fittings included. Hub Kit Sold Separately, for Mercury use 835257K6 or 835258K2 for 1 inch or 840389K06 for 1.25 inch propshaft.

Diameter	Pitch	Pro Finished RH Rotation
15.25	22	48-831910L60
15.25	22.5	48-8M0111147
15.25	23	48-831910L80
15.25	23.5	48-8M0100104
15.25	24	48-831912L60
15.25	24.5	48-8M0111148
15.25	25	48-831912L80
15.25	25.5	48-8M0100105
15 .25	26	48-831914L60
15.25	26.5	48-8M0111149
15.25	27	48-831914L80
15.25	27.5	48-8M0100106
15.25	28	48-831916L60
15.25	28.5	48-8M0111150
15.25	29	48-831916L80
15.25	29.5	48-8M0100107
15.25	30	48-831918L60
15.25	30.5	48-8M0111151
15.25	31	48-831918L80
15.25	31.5	48-8M0100109

BRAVO I XC PRO FINISHED



Bravo I XC Pro Finished Outboard

Hub Kit Sold Separately, for Mercury use 835257K6 or 835258K2 for 1 inch or 840389K06 for 1.25 inch propshaft.

A shallow water running 4 blade offering a tremendous amount of cup, extended barrel for quick planing and added durability.

The added cup reduces engine rpm, plan to drop 2 inch pitch compared to standard Bravo I and if running a jack plate consider increased engine height.

Diameter	Pitch	Pro Finished RH Rotation
15.25	20	48-8M0100110
15.25	22	48-8M0100111
15.25	24	48-8M0100112

BRAVO I FS PRO FINISHED



Bravo I FS Pro Finished Propeller Chart

Equipped with PVS, sold fittings installed. Hub Kit Sold separately, for Mercury use 835257K6 or 835258K2 for 1 inch or 840389K06 for 1.25 inch propshaft.

Used with single or multi engine four stroke Verado's, 20 inch and 21 inch pitch can also be used with 150 to 300 OptiMax, all pitches can be used with multi engine 150 to 300 OptiMax and up to 600 HP MerCruiser.

Diameter	Pitch	Pro Finished LH Rotation	Pro Finished RH Rotation
15.25	20	48-8M0090453	48-8M0090451
15.25	21	48-8M0090457	48-8M0090455
15.25	22	48-8M0071088	48-8M0064450
15.25	23	48-8M0071089	48-8M0064468
15.25	24	48-8M0071090	48-8M0064469
15.25	25	48-8M0071091	48-8M0064470
15.25	26	48-8M0071092	48-8M0064471
15.25	27	48-8M0071093	48-8M0064472
15.25	28	48-8M0071094	48-8M0064473
15.25	29	48-8M0071095	48-8M0064475
15.25	30	48-8M0071096	48-8M0064476
15.25	31	48-8M0071097	48-8M0064477
15.25	32	48-8M0104418	48-8M0104417
15.25	33	48-8M0104420	48-8M0104419

BRAVO I OC LAB FINISHED



Bravo I OC Lab Finished Outboard Propeller Chart

Polished Lab Finished, reduced diameter with added tip cup, shortened barrel to minimize stern lift and equipped with dual PVS for quick planing. Hub Kit Sold separately, 835258K2 for 1 inch or 840389K06 for 1.25 inch propshaft.

Used with Sport Master gearcase.

Diameter	Pitch	Pro Finished LH Rotation	Pro Finished RH Rotation
14.75	28	48-8M0092003	48-8M0092002
14.75	29	48-8M0092005	48-8M0092004
14.75	30	48-8M0092007	48-8M0092006
14.75	31	48-8M0092009	48-8M0092008
14.75	32	48-8M0092011	48-8M0092010
14.75	33	48-8M0092013	48-8M0092012
14.75	34	48-8M0092015	48-8M0092014
14.75	35	48-8M0092017	48-8M0092016

BRAVO I - 4 BLADE SS LAB FINISHED



Bravo I 4 Blade SS Lab Finished Sterndrive and 4 Stroke Outboard Chart

New for 2014 the Lab Finished Bravo I features Polished finish. Hub Kit Sold separately use 835258K2 for 1 inch and 840389K06 for 1.25 inch Propshaft. The L35 has superseded to the L45 and the L55 superseded to L65.

Diameter	Pitch	Lab Finished LH Rotation	Lab Finished RH Rotation
15.25	22	48-831909L65	48-831910L65
15.25	23	48-8M0073457	48-8M0073456
15.25	24	48-831911L65	48-831912L65
15.25	25	48-831911L45	48-831912L45
15.25	26	48-831913L65	48-831914L65
15.25	27	48-831913L45	48-831914L45
15.25	28	48-831915L65	48-831916L65
15.25	29	48-831915L45	48-831916L45
15.25	30	48-831917L65	48-831918L65
15.25	31	48-831917L45	48-831918L45
15.25	32	48-831919L65	48-831920L65
15.25	33	48-831919L45	48-831920L45
15.25	34	48-832121L65	48-832122L65
15.25	35	48-832121L45	48-832122L45
15.25	36	48-832123L65	48-832124L65
15.25	37	48-832123L45	48-832124L45

BRAVO I - 4 BLADE SS LAB FINISHED WITH PVS



Bravo I 4 Blade SS Lab Finished Outboard Propeller Chart

The Lab Finished Bravo I features a high luster finish. Hub Kit Sold Separately use 835258K2 for 1 inch or 840389K06 for 1.25 inch Propshaft

Diameter	Pitch	Lab Finished LH Rotation	Lab Finished RH Rotation
15.25 (1 Inch Vents)	22	48-831909L66	48-831910L66
15.25 (1 Inch Vents)	23	48-831909L46	48-831910L46
15.25 (1 Inch Vents)	24	48-831911L66	48-831912L66
15.25 (1 Inch Vents)	25	48-831911L46	48-831912L46
15.25 (1 Inch Vents)	26	48-831913L66	48-831914L66
15.25 (1 Inch Vents)	27	48-831913L46	48-831914L46
15.25 (1 Inch Vents)	28	48-831915L66	48-831916L66
15.25 (1 Inch Vents)	29	48-831915L46	48-831916L46
15.25 (1 Inch Vents)	30	48-831917L66	48-831918L66
15.25 (1 Inch Vents)	32	48-831919L66	48-831920L66
15.25 (1 Inch Vents)	34	48-832121L66	48-832122L66
15.25 (1 Inch Vents)	36	48-832123L66	48-832124L66

ENERTIA ECO XP PROPELLER



Enertia ECO XP Propeller Chart

Hub Kit Sold Separately use 835258K2 for 1 inch or 840389K06 for 1.25 inch Propshaft

Diameter	Pitch	LH Rotation	RH Rotaion
16	16.5	48-8M0110303	48-8M0110304
16	18.5	48-8M0108351	48-8M0108350
16	20.5	48-8M0108353	48-8M0108352
16	22.5	48-8M0108357	48-8M0108354

REVOLUTION 4 XC PRO FINISHED PROPELLER



Revolution 4 XP Pro Finished Chart

Designed for single outboard powered Flats and Flat Cat hulls requiring tremendous planing performance in shallow water. The added cup enables the XC to stay hooked up at elevated engine heights ideal for scouting fish. Excellent holding with some sacrifice to speed. Hub kit sold separate, for 1 inch use 835257K6 or SS kit 835258K 2, or 840389K06 for 1.25 inch propshaft

Diameter	Pitch	Pro Finished RH Rotaion
14.8	15	48-8M0111924
14.8	17	48-8M0111925

REVOLUTION 4 XP PRO FINISHED PROPELLER



Revolution 4 XP Pro Finished Chart

For multi-engine outboard powered Center Console and single engine Bay Boats. Hub Kit Sold Separately use 835258K2 for 1 inch or 840389K06 for 1.25 inch propshaft

Diameter	Pitch	Pro Finished LH Rotaion	Pro Finished RH Rotaion
14.6	18	48-8M0113929	48-8M0113928
14.6	18.5	48-8M0113931	48-8M0113930
14.6	19	48-8M0113933	48-8M0113932
14.6	19.5	48-8M0113935	48-8M0113934
14.6	20	48-8M0113937	48-8M0113936
14.6	20.5	48-8M0113939	48-8M0113938
14.6	21	48-8M0113941	48-8M0113940
14.6	21.5	48-8M0113943	48-8M0113942
14.6	22	48-8M0113945	48-8M0113944
14.6	22.5	48-8M0113947	48-8M0113946
14.6	23	48-8M0113949	48-8M0113948
14.6	23.5	48-8M0113951	48-8M0113950
14.6	24	48-8M0113953	48-8M0113952
14.6	24.5	48-8M0113955	48-8M0113954
14.6	25	48-8M0113957	48-8M0113956
14.6	25.5	48-8M0113959	48-8M0113958

REVOLUTION 4 LAB FINISHED PROPELLER



Revolution 4 Lab Finished Chart

For multi-engine outboard powered Center Console and single engine Bay Boats. Hub Kit Sold Separately use 835258K2 for 1 inch or 840389K06 for 1.25 inch Propshaft

Diameter	Pitch	Lab Finished LH Rotaion	Lab Finished RH Rotaion
14.6	19	48-857027L55	48-857026L55
14.6	20	48-8M0106547	48-8M0106548
14.6	21	48-857029L55	48-857028L55
14.6	22	48-8M0106545	48-8M0106546
14.6	23	48-857031L55	48-857030L55
14.6	24	48-8M0106543	48-8M0106544
14.6	25	48-857033L55	48-857032L55

MAXIMUS ST PRO FINISHED



Maximus ST Pro Finished Propeller Chart

Pro Finished Maximus with 7.875 inch barrel length reducing stern lift, full and reduced diameter to accommodate X dimensions. Hub Kit Sold Separately, for Mercury use 835258K2 for 1 inch or 840389K06 for 1.25 inch propshaft.

Diameter	Pitch	Lab Finished LH Rotation	Lab Finished RH Rotation
15.6	24	48-8M0091991	48-8M0091990
15.3	24	48-8M0091979	48-8M0091978
15.6	26	48-8M0091993	48-8M0091992
15.3	26	48-8M0091981	48-8M0091980
15.6	28	48-8M0091995	48-8M0091994
15.3	28	48-8M0091983	48-8M0091982
15.6	30	48-8M0091997	48-8M0091996
15.3	30	48-8M0091985	48-8M0091984
15.6	32	48-8M0091999	48-8M0091998
15.3	32	48-8M0091987	48-8M0091986
15.6	34	48-8M0092001	48-8M0092000
15.3	34	48-8M0091997	48-8M0091988

MAXIMUS LONG TUBE 5 BLADE SS LAB FINISHED



Maximus Long Tube 5 Blade Stainless Steel Sterndrive Propeller Chart

Barrel length 8.5 inches. Hub Kit Sold Separately, for Mercury use 835258K2 for 1 inch or 840389K06 for 1.25 inch propshaft.

Diameter	Pitch	Lab Finished LH Rotation	Lab Finished RH Rotation
15.625	23	48-889975L45	48-889974L45
15.25	23	48-889975L44	48-889974L44
15.625	24	48-889975L65	48-889974L65
15.25	24	48-889975L64	48-889974L64
15	24	48-889975L63	48-889974L63
15.625	25	48-889965L45	48-889964L45
15.25	25	48-889965L44	48-889964L44
15.625	26	48-889965L65	48-889964L65
15.25	26	48-889965L64	48-889964L64
15	26	48-889965L63	48-889964L63
15.625	27	48-889967L45	48-889966L45
15.25	27	48-889967L44	48-889966L44
15.625	28	48-889967L65	48-889966L65
15.25	28	48-889967L64	48-889966L64
15	28	48-889967L63	48-889966L63
15.625	29	48-889969L45	48-889968L45
15.25	29	48-889969L44	48-889968L44
15.625	30	48-889969L65	48-889968L65
15.25	30	48-889969L64	48-889968L64
15	30	48-889969L63	48-889968L63
15.625	31	48-889971L45	48-889970L45
15.25	31	48-889971L44	48-889970L44
15.625	32	48-889971L65	48-889970L65
15.25	32	48-889971L64	48-889970L64
15	32	48-889971L63	48-889970L63
15.625	33	48-889973L45	48-889972L45
15.25	33	48-889973L44	48-889972L44
15.625	34	48-889973L65	48-889972L65
15.25	34	48-889973L64	48-889972L64
15	34	48-889973L63	48-889972L63
15.625	35	48-889973L85	48-889972L85
15.25	35	48-889973L84	48-889972L84

MAXIMUS SHORT TUBE 5 BLADE SS LAB FINISHED



Maximus Short Tube 5 Blade Stainless Steel Sterndrive Propeller Chart

Barrel length 7.875 inches reduces stern lift. Hub Kit Sold Separately, for Mercury use 835258K2 for 1 inch or 840389K06 for 1.25 inch propshaft.

Diameter	Pitch	Lab Finished LH Rotation	Lab Finished RH Rotation
15.625	23	48-889975L49	48-889974L49
15.25	23	48-889975L48	48-889974L48
15.625	24	48-889975L69	48-889974L69
15.25	24	48-889975L68	48-889974L68
15	24	48-889975L67	48-889974L67
15.625	25	48-889965L49	48-889964L49
15.25	25	48-889965L48	48-889964L48
15.625	26	48-889965L69	48-889964L69
15.25	26	48-889965L68	48-889964L68
15	26	48-889965L67	48-889964L67
15.625	27	48-889967L49	48-889966L49
15.25	27	48-889967L48	48-889966L48
15.625	28	48-889967L69	48-889966L69
15.25	28	48-889967L68	48-889966L68
15	28	48-889967L67	48-889966L67
15.625	29	48-889969L49	48-889968L49
15.25	29	48-889969L48	48-889968L48
15.625	30	48-889969L69	48-889968L69
15.25	30	48-889969L68	48-889968L68
15	30	48-889969L67	48-889968L67
15.625	31	48-889971L49	48-889970L49
15.25	31	48-889971L48	48-889970L48
15.625	32	48-889971L69	48-889970L69
15.25	32	48-889971L68	48-889970L68
15	32	48-889971L67	48-889970L67
15.625	33	48-889973L49	48-889972L49
15.25	33	48-889973L48	48-889972L48
15.625	34	48-889973L69	48-889972L69
15.25	34	48-889973L68	48-889972L68
15	34	48-889973L67	48-889972L67
15.625	35	48-889973L89	48-889972L89
15.25	35	48-889973L88	48-889972L88

BRAVO THREE XR PRO FINISHED



Bravo Three XR Pro Finished Sterndrive Propeller Chart

525 SC
350 Mag
7.4L MPI - 454 Mag MPI - 502 Mag MPI
496 Mag - 496 Mag HO
8.2 Mag - 8.2 Mag HO
D2.8L D-Tronic
D3.6L - D4.2L - D4.2L D-Tronic
D7.3L - D7.3L D-Tronic
Modern Turbo Diesel

Bravo Three XR Propeller Hardware:
Bravo Three Inner Prop Nut Wrench 91-805457T 1
Forward Thrust Washer 805101T
Aft Thrust Washer 805100T
Forward Prop Nut 11-805092T
Aft Prop Nut 11-805093

Diameter	Pitch	Material	Blades	Pro Finished LH Rotation	Pro Finished RH Rotation
15.50	28	Polished SS	4	48-842945L80	N/A
14.50	28	Polished SS	3	N/A	48-842946L80
15.50	27	Polished SS	4	48-842945L70	N/A
14.50	27	Polished SS	3	N/A	48-842946L70
15.75	26	Polished SS	4	48-842943L80	N/A
14.75	26	Polished SS	3	N/A	48-842944L80
15.75	25	Polished SS	4	48-842943L70	N/A
14.75	25	Polished SS	3	N/A	48-842944L70
16	24	Polished SS	4	48-842941L80	N/A
15	24	Polished SS	3	N/A	48-842942L80
16	23	Polished SS	4	48-842941L70	N/A
15	23	Polished SS	3	N/A	48-842942L70
16	22	Polished SS	4	48-8M0073458	N/A
15	22	Polished SS	3	N/A	48-8M0073459
16	21	Polished SS	4	48-842939L70	N/A
15	21	Polished SS	3	N/A	48-842940L70

CNC CLEAVER 5 BLADE 15 DEGREE RAKE PRO FINISHED STERNDRIVE PROPELLER



CNC Cleaver, 5 Blade, 15 Degree Rake - 1550 HP

IIIA, IV, V, VI, VII SSM, NXT1, M8
26 Spline hub with 1.75/1.88 in.(44.5/47.7mm) O.D. propeller shaft and 6 in. (152mm) hub length

Diameter (Inches)	Pitch	Pro Finished LH Rotation	Pro Finished RH Rotation
18	26	48-8M0049063	48-8M0049064
17.75	26	48-8M0049093	48-8M0049094
17.50	26	48-8M0049123	48-8M0049124
17.25	26	48-8M0049153	48-8M0049154
17	26	48-8M0049183	48-8M0049184
16.75	26	48-8M0049213	48-8M0049214
16.50	26	48-8M0049243	48-8M0049244
16.25	26	48-8M0049273	48-8M0049274
16	26	48-8M0049303	48-8M0049304
18	27	48-8M0049065	48-8M0049066
17.75	27	48-8M0049095	48-8M0049096
17.50	27	48-8M0049125	48-8M0049126
17.25	27	48-8M0049155	48-8M0049156
17	27	48-8M0049185	48-8M0049186
16.75	27	48-8M0049215	48-8M0049216
16.50	27	48-8M0049245	48-8M0049246
16.25	27	48-8M0049275	48-8M0049276
16	27	48-8M0049305	48-8M0049306
18	28	48-8M0049067	48-8M0049068
17.75	28	48-8M0049097	48-8M0049098
17.50	28	48-8M0049127	48-8M0049128
17.25	28	48-8M0049157	48-8M0049158
17	28	48-8M0049187	48-8M0049188
16.75	28	48-8M0049217	48-8M0049218
16.50	28	48-8M0049247	48-8M0049248
16.25	28	48-8M0049277	48-8M0049278
16	28	48-8M0049307	48-8M0049308
18	29	48-8M0049069	48-8M0049070
17.75	29	48-8M0049099	48-8M0049100
17.50	29	48-8M0049129	48-8M0049130
17.25	29	48-8M0049159	48-8M0049160
17	29	48-8M0049189	48-8M0049190
16.75	29	48-8M0049219	48-8M0049220
16.50	29	48-8M0049249	48-8M0049250
16.25	29	48-8M0049279	48-8M0049280
16	29	48-8M0049309	48-8M0049310
18	30	48-8M0049071	48-8M0049072
17.75	30	48-8M0049101	48-8M0049102
17.50	30	48-8M0049131	48-8M0049132
17.25	30	48-8M0049161	48-8M0049162
17	30	48-8M0049191	48-8M0049192
16.75	30	48-8M0049221	48-8M0049222
16.50	30	48-8M0049251	48-8M0049252
16.25	30	48-8M0049281	48-8M0049282
16	30	48-8M0049311	48-8M0049312
18	31	48-8M0049073	48-8M0049074
17.75	31	48-8M0049103	48-8M0049104
17.50	31	48-8M0049133	48-8M0049134
17.25	31	48-8M0049163	48-8M0049164

Diameter (Inches)	Pitch	Pro Finished LH Rotation	Pro Finished RH Rotation
17	31	48-8M0049193	48-8M0049194
16.75	31	48-8M0049223	48-8M0049224
16.50	31	48-8M0049253	48-8M0049254
16.25	31	48-8M0049283	48-8M0049284
16	31	48-8M0049313	48-8M0049314
18	32	48-8M0049075	48-8M0049076
17.75	32	48-8M0049105	48-8M0049106
17.50	32	48-8M0049135	48-8M0049136
17.25	32	48-8M0049165	48-8M0049166
17	32	48-8M0049195	48-8M0049196
16.75	32	48-8M0049225	48-8M0049226
16.50	32	48-8M0049255	48-8M0049256
16.25	32	48-8M0049285	48-8M0049286
16	32	48-8M0049315	48-8M0049316
18	33	48-8M0049077	48-8M0049078
17.75	33	48-8M0049107	48-8M0049108
17.50	33	48-8M0049137	48-8M0049138
17.25	33	48-8M0049167	48-8M0049168
17	33	48-8M0049197	48-8M0049198
16.75	33	48-8M0049227	48-8M0049228
16.50	33	48-8M0049257	48-8M0049258
16.25	33	48-8M0049287	48-8M0049288
16	33	48-8M0049317	48-8M0049318
18	34	48-8M0049079	48-8M0049080
17.75	34	48-8M0049109	48-8M0049110
17.50	34	48-8M0049139	48-8M0049140
17.25	34	48-8M0049169	48-8M0049170
17	34	48-8M0049199	48-8M0049200
16.75	34	48-8M0049229	48-8M0049230
16.50	34	48-8M0049259	48-8M0049260
16.25	34	48-8M0049289	48-8M0049290
16	34	48-8M0049319	48-8M0049320
18	35	48-8M0049081	48-8M0049082
17.75	35	48-8M0049111	48-8M0049112
17.50	35	48-8M0049141	48-8M0049142
17.25	35	48-8M0049171	48-8M0049172
17	35	48-8M0049201	48-8M0049202
16.75	35	48-8M0049231	48-8M0049232
16.50	35	48-8M0049261	48-8M0049262
16.25	35	48-8M0049291	48-8M0049292
16	35	48-8M0049321	48-8M0049322
18	36	48-8M0049083	48-8M0049084
17.75	36	48-8M0049113	48-8M0049114
17.50	36	48-8M0049143	48-8M0049144
17.25	36	48-8M0049173	48-8M0049174
17	36	48-8M0049203	48-8M0049204
16.75	36	48-8M0049233	48-8M0049234
16.50	36	48-8M0049263	48-8M0049264
16.25	36	48-8M0049293	48-8M0049294
16	36	48-8M0049323	48-8M0049324
18	37	48-8M0049085	48-8M0049086
17.75	37	48-8M0049115	48-8M0049116
17.50	37	48-8M0049145	48-8M0049146
17.25	37	48-8M0049175	48-8M0049176

Diameter (Inches)	Pitch	Pro Finished LH Rotation	Pro Finished RH Rotation
17	37	48-8M0049205	48-8M0049206
16.75	37	48-8M0049235	48-8M0049236
16.50	37	48-8M0049265	48-8M0049266
16.25	37	48-8M0049295	48-8M0049296
16	37	48-8M0049325	48-8M0049326
18	38	48-8M0049087	48-8M0049088
17.75	38	48-8M0049117	48-8M0049118
17.50	38	48-8M0049147	48-8M0049148
17.25	38	48-8M0049177	48-8M0049178
17	38	48-8M0049207	48-8M0049208
16.75	38	48-8M0049237	48-8M0049238
16.50	38	48-8M0049267	48-8M0049268
16.25	38	48-8M0049297	48-8M0049298
16	38	48-8M0049327	48-8M0049328
18	39	48-8M0049089	48-8M0049090
17.75	39	48-8M0049119	48-8M0049120
17.50	39	48-8M0049149	48-8M0049150
17.25	39	48-8M0049179	48-8M0049180
17	39	48-8M0049209	48-8M0049210
16.75	39	48-8M0049239	48-8M0049240
16.50	39	48-8M0049269	48-8M0049270
16.25	39	48-8M0049299	48-8M0049300
16	39	48-8M0049329	48-8M0049330
18	40	48-8M0049091	48-8M0049092
17.75	40	48-8M0049121	48-8M0049122
17.50	40	48-8M0049151	48-8M0049152
17.25	40	48-8M0049181	48-8M0049182
17	40	48-8M0049211	48-8M0049212
16.75	40	48-8M0049241	48-8M0049242
16.50	40	48-8M0049271	48-8M0049272
16.25	40	48-8M0049301	48-8M0049302
16	40	48-8M0049331	48-8M0049332

CNC Cleaver, 5 Blade, 15 Degree Rake - 1200 HP

IIIA, IV, V, VI, VII SSM, NXT1, M8
26 Spline hub with 1.75/1.88 in.(44.5/47.7mm) O.D. propeller shaft and 6 in. (152mm) hub length

Diameter (Inches)	Pitch	Pro Finished LH Rotation	Pro Finished RH Rotation
18	26	48-8M0002277	48-8M0002278
17.75	26	48-8M0002307	48-8M0002308
17.50	26	48-8M0002337	48-8M0002338
17.25	26	48-8M0002367	48-8M0002368
17	26	48-8M0002397	48-8M0002398
16.75	26	48-8M0002427	48-8M0002428
16.50	26	48-8M0002457	48-8M0002458
16.25	26	48-8M0002487	48-8M0002488
16	26	48-8M0002517	48-8M0002518
15.75	26	48-8M0002547	48-8M0002548
15.50	26	48-8M0002577	48-8M0002578
15.25	26	48-8M0002607	48-8M0002608
15	26	48-8M0002637	48-8M0002638
18	27	48-8M0002279	48-8M0002280
17.75	27	48-8M0002309	48-8M0002310

Diameter (Inches)	Pitch	Pro Finished LH Rotation	Pro Finished RH Rotation
17.50	27	48-8M0002339	48-8M0002340
17.25	27	48-8M0002369	48-8M0002370
17	27	48-8M0002399	48-8M0002400
16.75	27	48-8M0002429	48-8M0002430
16.50	27	48-8M0002459	48-8M0002460
16.25	27	48-8M0002489	48-8M0002490
16	27	48-8M0002519	48-8M0002520
15.75	27	48-8M0002549	48-8M0002550
15.50	27	48-8M0002579	48-8M0002580
15.25	27	48-8M0002609	48-8M0002610
15	27	48-8M0002639	48-8M0002640
18	28	48-8M0002281	48-8M0002282
17.75	28	48-8M0002311	48-8M0002312
17.50	28	48-8M0002341	48-8M0002342
17.25	28	48-8M0002371	48-8M0002372
17	28	48-8M0002401	48-8M0002402
16.75	28	48-8M0002431	48-8M0002432
16.50	28	48-8M0002461	48-8M0002462
16.25	28	48-8M0002491	48-8M0002492
16	28	48-8M0002521	48-8M0002522
15.75	28	48-8M0002551	48-8M0002552
15.50	28	48-8M0002581	48-8M0002582
15.25	28	48-8M0002611	48-8M0002612
15	28	48-8M0002641	48-8M0002642
18	29	48-8M0002283	48-8M0002284
17.75	29	48-8M0002313	48-8M0002314
17.50	29	48-8M0002343	48-8M0002344
17.25	29	48-8M0002373	48-8M0002374
17	29	48-8M0002403	48-8M0002404
16.75	29	48-8M0002433	48-8M0002434
16.50	29	48-8M0002463	48-8M0002464
16.25	29	48-8M0002493	48-8M0002494
16	29	48-8M0002523	48-8M0002524
15.75	29	48-8M0002553	48-8M0002554
15.50	29	48-8M0002583	48-8M0002584
15.25	29	48-8M0002613	48-8M0002614
15	29	48-8M0002643	48-8M0002644
18	30	48-8M0002285	48-8M0002286
17.75	30	48-8M0002315	48-8M0002316
17.50	30	48-8M0002345	48-8M0002346
17.25	30	48-8M0002375	48-8M0002376
17	30	48-8M0002405	48-8M0002406
16.75	30	48-8M0002435	48-8M0002436
16.50	30	48-8M0002465	48-8M0002466
16.25	30	48-8M0002495	48-8M0002496
16	30	48-8M0002525	48-8M0002526
15.75	30	48-8M0002555	48-8M0002556
15.50	30	48-8M0002585	48-8M0002586
15.25	30	48-8M0002615	48-8M0002616
15	30	48-8M0002645	48-8M0002646
18	31	48-8M0002287	48-8M0002288
17.75	31	48-8M0002317	48-8M0002318
17.50	31	48-8M0002347	48-8M0002348
17.25	31	48-8M0002377	48-8M0002378

Diameter (Inches)	Pitch	Pro Finished LH Rotation	Pro Finished RH Rotation
17	31	48-8M0002407	48-8M0002408
16.75	31	48-8M0002437	48-8M0002438
16.50	31	48-8M0002467	48-8M0002468
16.25	31	48-8M0002497	48-8M0002498
16	31	48-8M0002527	48-8M0002528
15.75	31	48-8M0002557	48-8M0002558
15.50	31	48-8M0002587	48-8M0002588
15.25	31	48-8M0002617	48-8M0002618
15	31	48-8M0002647	48-8M0002648
18	32	48-8M0002289	48-8M0002290
17.75	32	48-8M0002319	48-8M0002320
17.50	32	48-8M0002349	48-8M0002350
17.25	32	48-8M0002379	48-8M0002380
17	32	48-8M0002409	48-8M0002410
16.75	32	48-8M0002439	48-8M0002440
16.50	32	48-8M0002469	48-8M0002470
16.25	32	48-8M0002499	48-8M0002500
16	32	48-8M0002529	48-8M0002530
15.75	32	48-8M0002559	48-8M0002560
15.50	32	48-8M0002589	48-8M0002590
15.25	32	48-8M0002619	48-8M0002620
15	32	48-8M0002649	48-8M0002650
18	33	48-8M0003461	48-8M0003462
17.75	33	48-8M0002321	48-8M0002322
17.50	33	48-8M0002351	48-8M0002352
17.25	33	48-8M0002381	48-8M0002382
17	33	48-8M0002411	48-8M0002412
16.75	33	48-8M0002441	48-8M0002442
16.50	33	48-8M0002471	48-8M0002472
16.25	33	48-8M0002501	48-8M0002502
16	33	48-8M0002531	48-8M0002532
15.75	33	48-8M0002561	48-8M0002562
15.50	33	48-8M0002591	48-8M0002592
15.25	33	48-8M0002621	48-8M0002622
15	33	48-8M0002651	48-8M0002652
18	34	48-8M0002293	48-8M0002294
17.75	34	48-8M0002323	48-8M0002324
17.50	34	48-8M0002353	48-8M0002354
17.25	34	48-8M0002383	48-8M0002384
17	34	48-8M0002413	48-8M0002414
16.75	34	48-8M0002443	48-8M0002444
16.50	34	48-8M0002473	48-8M0002474
16.25	34	48-8M0002503	48-8M0002504
16	34	48-8M0002533	48-8M0002534
15.75	34	48-8M0002563	48-8M0002564
15.50	34	48-8M0002593	48-8M0002594
15.25	34	48-8M0002623	48-8M0002624
15	34	48-8M0002653	48-8M0002654
18	35	48-8M0002295	48-8M0002296
17.75	35	48-8M0002325	48-8M0002326
17.50	35	48-8M0002355	48-8M0002356
17.25	35	48-8M0002385	48-8M0002386
17	35	48-8M0002415	48-8M0002416
16.75	35	48-8M0002445	48-8M0002446

Diameter (Inches)	Pitch	Pro Finished LH Rotation	Pro Finished RH Rotation
16.50	35	48-8M0002475	48-8M0002476
16.25	35	48-8M0002505	48-8M0002506
16	35	48-8M0002535	48-8M0002536
15.75	35	48-8M0002565	48-8M0002566
15.50	35	48-8M0002595	48-8M0002596
15.25	35	48-8M0002625	48-8M0002626
15	35	48-8M0002655	48-8M0002656
18	36	48-8M0002297	48-8M0002298
17.75	36	48-8M0002327	48-8M0002328
17.50	36	48-8M0002357	48-8M0002358
17.25	36	48-8M0002387	48-8M0002388
17	36	48-8M0002417	48-8M0002418
16.75	36	48-8M0002447	48-8M0002448
16.50	36	48-8M0002477	48-8M0002478
16.25	36	48-8M0002507	48-8M0002508
16	36	48-8M0002537	48-8M0002538
15.75	36	48-8M0002567	48-8M0002568
15.50	36	48-8M0002597	48-8M0002598
15.25	36	48-8M0002627	48-8M0002628
15	36	48-8M0002657	48-8M0002658
18	37	48-8M0002299	48-8M0002300
17.75	37	48-8M0002329	48-8M0002330
17.50	37	48-8M0002359	48-8M0002360
17.25	37	48-8M0002389	48-8M0002390
17	37	48-8M0002419	48-8M0002420
16.75	37	48-8M0002449	48-8M0002450
16.50	37	48-8M0002479	48-8M0002480
16.25	37	48-8M0002509	48-8M0002510
16	37	48-8M0002539	48-8M0002540
15.75	37	48-8M0002569	48-8M0002570
15.50	37	48-8M0002599	48-8M0002600
15.25	37	48-8M0002629	48-8M0002630
15	37	48-8M0002659	48-8M0002660
18	38	48-8M0002301	48-8M0002302
17.75	38	48-8M0002331	48-8M0002332
17.50	38	48-8M0002361	48-8M0002362
17.25	38	48-8M0002391	48-8M0002392
17	38	48-8M0002421	48-8M0002422
16.75	38	48-8M0002451	48-8M0002452
16.50	38	48-8M0002481	48-8M0002482
16.25	38	48-8M0002511	48-8M0002512
16	38	48-8M0002541	48-8M0002542
15.75	38	48-8M0002571	48-8M0002572
15.50	38	48-8M0002601	48-8M0002602
15.25	38	48-8M0002631	48-8M0002632
15	38	48-8M0002661	48-8M0002662
18	39	48-8M0002303	48-8M0002304
17.75	39	48-8M0002333	48-8M0002334
17.50	39	48-8M0002363	48-8M0002364
17.25	39	48-8M0002393	48-8M0002394
17	39	48-8M0002423	48-8M0002424
16.75	39	48-8M0002453	48-8M0002454
16.50	39	48-8M0002483	48-8M0002484
16.25	39	48-8M0002513	48-8M0002514
16	39	48-8M0002543	48-8M0002544
15.75	39	48-8M0002573	48-8M0002574
15.50	39	48-8M0002603	48-8M0002604
15.25	39	48-8M0002633	48-8M0002634
15	39	48-8M0002663	48-8M0002664
18	40	48-8M0002305	48-8M0002306
17.75	40	48-8M0002335	48-8M0002336
17.50	40	48-8M0002365	48-8M0002366
17.25	40	48-8M0002395	48-8M0002396
17	40	48-8M0002425	48-8M0002426
16.75	40	48-8M0002455	48-8M0002456
16.50	40	48-8M0002485	48-8M0002486
16.25	40	48-8M0002515	48-8M0002516
15	40	48-8M0002545	48-8M0002546
15.75	40	48-8M0002575	48-8M0002576
15.50	40	48-8M0002605	48-8M0002606
15.25	40	48-8M0002635	48-8M0002636
15	40	48-8M0002665	48-8M0002666

CNC Cleaver, 5 Blade, 15 Degree Rake - 900 HP

IIIA, IV, V, VI, VII SSM, NXT1
26 Spline hub with 1.75/1.88 in.(44.5/47.7mm) O.D. propeller shaft and 6 in. (152mm) hub length

Diameter (Inches)	Pitch	Pro Finished LH Rotation	Pro Finished RH Rotation
18	26	48-8M0003447	48-8M0003448
17.75	26	48-8M0003449	48-8M0003450
17.50	26	48-8M0003507	48-8M0003508
17.25	26	48-8M0003537	48-8M0003538
17	26	48-8M0003567	48-8M0003568
16.75	26	48-8M0003597	48-8M0003598
16.50	26	48-8M0003627	48-8M0003628
16.25	26	48-8M0003657	48-8M0003658
16	26	48-8M0003687	48-8M0003688
15.75	26	48-8M0003717	48-8M0003718
15.50	26	48-8M0003747	48-8M0003748
15.25	26	48-8M0003777	48-8M0003778
15	26	48-8M0003807	48-8M0003808
18	27	48-8M0003449	48-8M0003450
17.75	27	48-8M0003479	48-8M0003480
17.50	27	48-8M0003507	48-8M0003508
17.25	27	48-8M0003539	48-8M0003538
17	27	48-8M0003569	48-8M0003570
16.75	27	48-8M0003599	48-8M0003600
16.50	27	48-8M0003629	48-8M0003630
16.25	27	48-8M0003659	48-8M0003660
16	27	48-8M0003687	48-8M0003688
15.75	27	48-8M0003719	48-8M0003720
15.50	27	48-8M0003749	48-8M0003750
15.25	27	48-8M0003779	48-8M0003780
15	27	48-8M0003809	48-8M0003810
18	28	48-8M0003451	48-8M0003452
17.75	28	48-8M0003481	48-8M0003482
17.50	28	48-8M0003511	48-8M0003512

Diameter (Inches)	Pitch	Pro Finished LH Rotation	Pro Finished RH Rotation
17.25	28	48-8M0003541	48-8M0003542
17	28	48-8M0003571	48-8M0003572
16.75	28	48-8M0003601	48-8M0003602
16.50	28	48-8M0003631	48-8M0003632
16.25	28	48-8M0003661	48-8M0003662
16	28	48-8M0003691	48-8M0003692
15.75	28	48-8M0003721	48-8M0003722
15.50	28	48-8M0003751	48-8M0003752
15.25	28	48-8M0003781	48-8M0003782
15	28	48-8M0003811	48-8M0003812
18	29	48-8M0003453	48-8M0003454
17.75	29	48-8M0003483	48-8M0003484
17.50	29	48-8M0003513	48-8M0003514
17.25	29	48-8M0003543	48-8M0003544
17	29	48-8M0003573	48-8M0003574
16.75	29	48-8M0003603	48-8M0003604
16.50	29	48-8M0003633	48-8M0003634
16.25	29	48-8M0003663	48-8M0003664
16	29	48-8M0003693	48-8M0003694
15.75	29	48-8M0003723	48-8M0003724
15.50	29	48-8M0003753	48-8M0003754
15.25	29	48-8M0003783	48-8M0003784
15	29	48-8M0003813	48-8M0003814
18	30	48-8M0003455	48-8M0003456
17.75	30	48-8M0003485	48-8M0003486
17.50	30	48-8M0003515	48-8M0003516
17.25	30	48-8M0003545	48-8M0003546
17	30	48-8M0003575	48-8M0003576
16.75	30	48-8M0003605	48-8M0003606
16.50	30	48-8M0003635	48-8M0003636
16.25	30	48-8M0003665	48-8M0003666
16	30	48-8M0003695	48-8M0003696
15.75	30	48-8M0003725	48-8M0003726
15.50	30	48-8M0003755	48-8M0003756
15.25	30	48-8M0003785	48-8M0003786
15	30	48-8M0003815	48-8M0003816
18	31	48-8M0003457	48-8M0003458
17.75	31	48-8M0003487	48-8M0003488
17.50	31	48-8M0003517	48-8M0003518
17.25	31	48-8M0003547	48-8M0003548
17	31	48-8M0003577	48-8M0003578
16.75	31	48-8M0003607	48-8M0003608
16.50	31	48-8M0003637	48-8M0003638
16.25	31	48-8M0003667	48-8M0003668
16	31	48-8M0003697	48-8M0003698
15.75	31	48-8M0003727	48-8M0003728
15.50	31	48-8M0003757	48-8M0003758
15.25	31	48-8M0003787	48-8M0003788
15	31	48-8M0003817	48-8M0003818
18	32	48-8M0003459	48-8M0003460
17.75	32	48-8M0003489	48-8M0003490
17.50	32	48-8M0003519	48-8M0003520
17.25	32	48-8M0003549	48-8M0003550
17	32	48-8M0003579	48-8M0003580

Diameter (Inches)	Pitch	Pro Finished LH Rotation	Pro Finished RH Rotation
16.75	32	48-8M0003609	48-8M0003610
16.50	32	48-8M0003639	48-8M0003640
16.25	32	48-8M0003669	48-8M0003670
16	32	48-8M0003699	48-8M0003700
15.75	32	48-8M0003729	48-8M0003730
15.50	32	48-8M0003759	48-8M0003760
15.25	32	48-8M0003789	48-8M0003790
15	32	48-8M0003819	48-8M0003820
18	33	48-8M0003461	48-8M0003462
17.75	33	48-8M0003491	48-8M0003492
17.50	33	48-8M0003521	48-8M0003522
17.25	33	48-8M0003551	48-8M0003552
17	33	48-8M0003581	48-8M0003582
16.75	33	48-8M0003611	48-8M0003612
16.50	33	48-8M0003641	48-8M0003642
16.25	33	48-8M0003671	48-8M0003672
16	33	48-8M0003701	48-8M0003702
15.75	33	48-8M0003731	48-8M0003732
15.50	33	48-8M0003761	48-8M0003762
15.25	33	48-8M0003791	48-8M0003792
15	33	48-8M0003821	48-8M0003822
18	34	48-8M0003463	48-8M0003464
17.75	34	48-8M0003493	48-8M0003494
17.50	34	48-8M0003523	48-8M0003524
17.25	34	48-8M0003553	48-8M0003554
17	34	48-8M0003583	48-8M0003584
16.75	34	48-8M0003613	48-8M0003614
16.50	34	48-8M0003643	48-8M0003644
16.25	34	48-8M0003673	48-8M0003674
16	34	48-8M0003703	48-8M0003704
15.75	34	48-8M0003733	48-8M0003734
15.50	34	48-8M0003763	48-8M0003764
15.25	34	48-8M0003793	48-8M0003794
15	34	48-8M0003823	48-8M0003824
18	35	48-8M0003465	48-8M0003466
17.75	35	48-8M0003495	48-8M0003496
17.50	35	48-8M0003525	48-8M0003526
17.25	35	48-8M0003555	48-8M0003556
17	35	48-8M0003585	48-8M0003586
16.75	35	48-8M0003615	48-8M0003616
16.50	35	48-8M0003645	48-8M0003646
16.25	35	48-8M0003675	48-8M0003676
16	35	48-8M0003705	48-8M0003706
15.75	35	48-8M0003835	48-8M0003836
15.50	35	48-8M0003765	48-8M0003766
15.25	35	48-8M0003795	48-8M0003796
15	35	48-8M0003825	48-8M0003826
18	36	48-8M0003467	48-8M0003468
17.75	36	48-8M0003497	48-8M0003498
17.50	36	48-8M0003527	48-8M0003528
17.25	36	48-8M0003557	48-8M0003558
17	36	48-8M0003587	48-8M0003588
16.75	36	48-8M0003617	48-8M0003618
16.50	36	48-8M0003647	48-8M0003648

Diameter (Inches)	Pitch	Pro Finished LH Rotation	Pro Finished RH Rotation
16.25	36	48-8M0003677	48-8M0003678
16	36	48-8M0003707	48-8M0003708
15.75	36	48-8M0003737	48-8M0003738
15.50	36	48-8M0003767	48-8M0003768
15.25	36	48-8M0003797	48-8M0003798
15	36	48-8M0003827	48-8M0003828
18	37	48-8M0003469	48-8M0003470
17.75	37	48-8M0003499	48-8M0003500
17.50	37	48-8M0003529	48-8M0003530
17.25	37	48-8M0003559	48-8M0003560
17	37	48-8M0003589	48-8M0003590
16.75	37	48-8M0003619	48-8M0003620
16.50	37	48-8M0003649	48-8M0003650
16.25	37	48-8M0003679	48-8M0003680
16	37	48-8M0003709	48-8M0003710
15.75	37	48-8M0003739	48-8M0003740
15.50	37	48-8M0003769	48-8M0003770
15.25	37	48-8M0003799	48-8M0003800
15	37	48-8M0003829	48-8M0003830
18	38	48-8M0003471	48-8M0003472
17.75	38	48-8M0003501	48-8M0003502
17.50	38	48-8M0003531	48-8M0003532
17.25	38	48-8M0003561	48-8M0003562
17	38	48-8M0003591	48-8M0003592
16.75	38	48-8M0003621	48-8M0003622
16.50	38	48-8M0003651	48-8M0003652
16.25	38	48-8M0003681	48-8M0003682
16	38	48-8M0003711	48-8M0003712
15.75	38	48-8M0003741	48-8M0003742
15.50	38	48-8M0003771	48-8M0003772
15.25	38	48-8M0003801	48-8M0003802
15	38	48-8M0003831	48-8M0003832
18	39	48-8M0003473	48-8M0003474
17.75	39	48-8M0003503	48-8M0003504
17.50	39	48-8M0003533	48-8M0003534
17.25	39	48-8M0003563	48-8M0003564
17	39	48-8M0003593	48-8M0003594
16.75	39	48-8M0003623	48-8M0003624
16.50	39	48-8M0003653	48-8M0003654
16.25	39	48-8M0003683	48-8M0003684
16	39	48-8M0003713	48-8M0003714
15.75	39	48-8M0003743	48-8M0003744
15.50	39	48-8M0003773	48-8M0003774
15.25	39	48-8M0003803	48-8M0003804
15	39	48-8M0003835	48-8M0003836
18	40	48-8M0003475	48-8M0003476
17.75	40	48-8M0003505	48-8M0003506
17.50	40	48-8M0003535	48-8M0003536
17.25	40	48-8M0003565	48-8M0003566
17	40	48-8M0003595	48-8M0003596
16.75	40	48-8M0003625	48-8M0003626
16.50	40	48-8M0003655	48-8M0003656
16.25	40	48-8M0003685	48-8M0003686
15	40	48-8M0003715	48-8M0003716
15.75	40	48-8M0003745	48-8M0003746
15.50	40	48-8M0003775	48-8M0003776
15.25	40	48-8M0003805	48-8M0003806
15	40	48-8M0003835	48-8M0003836

CNC Cleaver, 5 Blade, 15 Degree Rake - 600 HP

IIIA, IV, V, VI, VII SSM, NXT1
26 Spline hub with 1.75/1.88 in.(44.5/47.7mm) O.D. propeller shaft and 6 in. (152mm) hub length

Diameter (Inches)	Pitch	Pro Finished LH Rotation	Pro Finished RH Rotation
18	26	48-8M0004617	48-8M0004618
17.75	26	48-8M0004647	48-8M0004648
17.50	26	48-8M0004677	48-8M0004678
17.25	26	48-8M0004707	48-8M0004708
17	26	48-8M0004737	48-8M0004738
16.75	26	48-8M0004767	48-8M0004768
16.50	26	48-8M0004797	48-8M0004798
16.25	26	48-8M0004827	48-8M0004828
16	26	48-8M0004857	48-8M0004858
15.75	26	48-8M0004887	48-8M0004888
15.50	26	48-8M0004917	48-8M0004918
15.25	26	48-8M0004947	48-8M0004948
15	26	48-8M0004977	48-8M0004978
18	27	48-8M0004619	48-8M0004620
17.75	27	48-8M0004649	48-8M0004650
17.50	27	48-8M0004679	48-8M0004680
17.25	27	48-8M0004709	48-8M0004710
17	27	48-8M0004739	48-8M0004740
16.75	27	48-8M0004769	48-8M0004770
16.50	27	48-8M0004799	48-8M0004800
16.25	27	48-8M0004829	48-8M0004830
16	27	48-8M0004859	48-8M0004860
15.75	27	48-8M0004889	48-8M0004890
15.50	27	48-8M0004919	48-8M0004920
15.25	27	48-8M0004949	48-8M0004950
15	27	48-8M0004979	48-8M0004980
18	28	48-8M0004621	48-8M0004622
17.75	28	48-8M0004651	48-8M0004652
17.50	28	48-8M0004681	48-8M0004682
17.25	28	48-8M0004711	48-8M0004712
17	28	48-8M0004741	48-8M0004742
16.75	28	48-8M0004771	48-8M0004772
16.50	28	48-8M0004801	48-8M0004802
16.25	28	48-8M0004831	48-8M0004832
16	28	48-8M0004861	48-8M0004862
15.75	28	48-8M0004891	48-8M0004892
15.50	28	48-8M0004921	48-8M0004922
15.25	28	48-8M0004951	48-8M0004952
15	28	48-8M0004981	48-8M0004982
18	29	48-8M0004623	48-8M0004624
17.75	29	48-8M0004653	48-8M0004654
17.50	29	48-8M0004683	48-8M0004684
17.25	29	48-8M0004713	48-8M0004714

Diameter (Inches)	Pitch	Pro Finished LH Rotation	Pro Finished RH Rotation
17	29	48-8M0004743	48-8M0004744
16.75	29	48-8M0004773	48-8M0004774
16.50	29	48-8M0004803	48-8M0004804
16.25	29	48-8M0004833	48-8M0004834
16	29	48-8M0004863	48-8M0004864
15.75	29	48-8M0004893	48-8M0004894
15.50	29	48-8M0004923	48-8M0004924
15.25	29	48-8M0004953	48-8M0004954
15	29	48-8M0004983	48-8M0004984
18	30	48-8M0004625	48-8M0004626
17.75	30	48-8M0004655	48-8M0004656
17.50	30	48-8M0004685	48-8M0004686
17.25	30	48-8M0004715	48-8M0004716
17	30	48-8M0004745	48-8M0004746
16.75	30	48-8M0004775	48-8M0004776
16.50	30	48-8M0004805	48-8M0004806
16.25	30	48-8M0004835	48-8M0004836
16	30	48-8M0004865	48-8M0004866
15.75	30	48-8M0004895	48-8M0004896
15.50	30	48-8M0004925	48-8M0004926
15.25	30	48-8M0004955	48-8M0004956
15	30	48-8M0004985	48-8M0004986
18	31	48-8M0004627	48-8M0004628
17.75	31	48-8M0004657	48-8M0004658
17.50	31	48-8M0004687	48-8M0004688
17.25	31	48-8M0004717	48-8M0004718
17	31	48-8M0004747	48-8M0004748
16.75	31	48-8M0004777	48-8M0004778
16.50	31	48-8M0004807	48-8M0004808
16.25	31	48-8M0004837	48-8M0004838
16	31	48-8M0004867	48-8M0004868
15.75	31	48-8M0004897	48-8M0004898
15.50	31	48-8M0004927	48-8M0004928
15.25	31	48-8M0004957	48-8M0004958
15	31	48-8M0004987	48-8M0004988
18	32	48-8M0004629	48-8M0004630
17.75	32	48-8M0004659	48-8M0004660
17.50	32	48-8M0004689	48-8M0004690
17.25	32	48-8M0004719	48-8M0004720
17	32	48-8M0004749	48-8M0004750
16.75	32	48-8M0004779	48-8M0004780
16.50	32	48-8M0004809	48-8M0004810
16.25	32	48-8M0004839	48-8M0004840
16	32	48-8M0004869	48-8M0004870
15.75	32	48-8M0004899	48-8M0004900
15.50	32	48-8M0004929	48-8M0004930
15.25	32	48-8M0004959	48-8M0004960
15	32	48-8M0004989	48-8M0004990
18	33	48-8M0004631	48-8M0004632
17.75	33	48-8M0004661	48-8M0004662
17.50	33	48-8M0004691	48-8M0004692
17.25	33	48-8M0004721	48-8M0004722
17	33	48-8M0004751	48-8M0004752
16.75	33	48-8M0004781	48-8M0004782

Diameter (Inches)	Pitch	Pro Finished LH Rotation	Pro Finished RH Rotation
16.50	33	48-8M0004811	48-8M0004812
16.25	33	48-8M0004841	48-8M0004842
16	33	48-8M0004871	48-8M0004872
15.75	33	48-8M0004901	48-8M0004902
15.50	33	48-8M0004931	48-8M0004932
15.25	33	48-8M0004961	48-8M0004962
15	33	48-8M0004991	48-8M0004992
18	34	48-8M0004633	48-8M0004634
17.75	34	48-8M0004663	48-8M0004664
17.50	34	48-8M0004693	48-8M0004694
17.25	34	48-8M0004723	48-8M0004724
17	34	48-8M0004753	48-8M0004754
16.75	34	48-8M0004783	48-8M0004784
16.50	34	48-8M0004813	48-8M0004814
16.25	34	48-8M0004843	48-8M0004844
16	34	48-8M0004873	48-8M0004874
15.75	34	48-8M0004903	48-8M0004904
15.50	34	48-8M0004933	48-8M0004934
15.25	34	48-8M0004963	48-8M0004964
15	34	48-8M0004993	48-8M0004994
18	35	48-8M0004635	48-8M0004636
17.75	35	48-8M0004665	48-8M0004666
17.50	35	48-8M0004695	48-8M0004696
17.25	35	48-8M0004725	48-8M0004726
17	35	48-8M0004755	48-8M0004756
16.75	35	48-8M0004785	48-8M0004786
16.50	35	48-8M0004815	48-8M0004816
16.25	35	48-8M0004845	48-8M0004846
16	35	48-8M0004875	48-8M0004876
15.75	35	48-8M0004905	48-8M0004906
15.50	35	48-8M0004935	48-8M0004936
15.25	35	48-8M0004965	48-8M0004966
15	35	48-8M0004995	48-8M0004996
18	36	48-8M0004637	48-8M0004638
17.75	36	48-8M0004667	48-8M0004668
17.50	36	48-8M0004697	48-8M0004698
17.25	36	48-8M0004727	48-8M0004728
17	36	48-8M0004757	48-8M0004758
16.75	36	48-8M0004787	48-8M0004788
16.50	36	48-8M0004817	48-8M0004818
16.25	36	48-8M0004847	48-8M0004848
16	36	48-8M0004877	48-8M0004878
15.75	36	48-8M0004907	48-8M0004908
15.50	36	48-8M0004937	48-8M0004938
15.25	36	48-8M0004967	48-8M0004968
15	36	48-8M0004997	48-8M0004998
18	37	48-8M0004639	48-8M0004640
17.75	37	48-8M0004669	48-8M0004670
17.50	37	48-8M0004701	48-8M0004702
17.25	37	48-8M0004731	48-8M0004732
17	37	48-8M0004761	48-8M0004762
16.75	37	48-8M0004791	48-8M0004792
16.50	37	48-8M0004821	48-8M0004822
16.25	37	48-8M0004849	48-8M0004850

Diameter (Inches)	Pitch	Pro Finished LH Rotation	Pro Finished RH Rotation
16	37	48-8M0004879	48-8M0004880
15.75	37	48-8M0004909	48-8M0004910
15.50	37	48-8M0004939	48-8M0004940
15.25	37	48-8M0004971	48-8M0004972
15	37	48-8M0004999	48-8M0005000
18	38	48-8M0004641	48-8M0004642
17.75	38	48-8M0004671	48-8M0004672
17.50	38	48-8M0004701	48-8M0004702
17.25	38	48-8M0004731	48-8M0004732
17	38	48-8M0004761	48-8M0004762
16.75	38	48-8M0004791	48-8M0004792
16.50	38	48-8M0004821	48-8M0004822
16.25	38	48-8M0004851	48-8M0004852
16	38	48-8M0004881	48-8M0004882
15.75	38	48-8M0004911	48-8M0004912
15.50	38	48-8M0004941	48-8M0004942
15.25	38	48-8M0004971	48-8M0004972
15	38	48-8M0005001	48-8M0005002
18	39	48-8M0004643	48-8M0004644
17.75	39	48-8M0004673	48-8M0004674
17.50	39	48-8M0004703	48-8M0004704
17.25	39	48-8M0004733	48-8M0004734
17	39	48-8M0004763	48-8M0004764
16.75	39	48-8M0004793	48-8M0004794
16.50	39	48-8M0004823	48-8M0004824
16.25	39	48-8M0004853	48-8M0004854
16	39	48-8M0004883	48-8M0004884
15.75	39	48-8M0004913	48-8M0004914
15.50	39	48-8M0004943	48-8M0004944
15.25	39	48-8M0004973	48-8M0004974
15	39	48-8M0005003	48-8M0005004
18	40	48-8M0004645	48-8M0004646
17.75	40	48-8M0004675	48-8M0004676
17.50	40	48-8M0004705	48-8M0004706
17.25	40	48-8M0004735	48-8M0004736
17	40	48-8M0004765	48-8M0004766
16.75	40	48-8M0004795	48-8M0004796
16.50	40	48-8M0004825	48-8M0004826
16.25	40	48-8M0004855	48-8M0004856
15	40	48-8M0004885	48-8M0004886
15.75	40	48-8M0004915	48-8M0004916
15.50	40	48-8M0004945	48-8M0004946
15.25	40	48-8M0004975	48-8M0004976
15	40	48-8M0005005	48-8M0005006

CNC CLEAVER 5 BLADE 18 DEGREE RAKE PRO FINISHED STERNDRIVE PROPELLER



CNC Cleaver, 5 Blade, 18 Degree Rake - 1550 HP

IIIA, IV, V, VI, VII SSM, NXT1, M8
26 Spline hub with 1.75/1.88 in.(44.5/47.7mm) O.D. propeller shaft and 6 in. (152mm) hub length

Diameter (Inches)	Pitch	Pro Finished LH Rotation	Pro Finished RH Rotation
18	30	48-8M0049333	48-8M0049334
17.75	30	48-8M0049355	48-8M0049356
17.5	30	48-8M0049377	48-8M0049378
17.25	30	48-8M0049399	48-8M0049400
17	30	48-8M0049421	48-8M0049422
16.75	30	48-8M0049443	48-8M0049444
16.5	30	48-8M0049465	48-8M0049466
16.25	30	48-8M0049487	48-8M0049488
16	30	48-8M0049509	48-8M0049510
18	31	48-8M0049335	48-8M0049336
17.75	31	48-8M0049357	48-8M0049358
17.5	31	48-8M0049379	48-8M0049380
17.25	31	48-8M0049401	48-8M0049402
17	31	48-8M0049423	48-8M0049424
16.75	31	48-8M0049445	48-8M0049446
16.5	31	48-8M0049467	48-8M0049468
16.25	31	48-8M0049489	48-8M0049490
16	31	48-8M0049511	48-8M0049512
18	32	48-8M0049337	48-8M0049338
17.75	32	48-8M0049359	48-8M0049360
17.5	32	48-8M0049381	48-8M0049382
17.25	32	48-8M0049403	48-8M0049404
17	32	48-8M0049425	48-8M0049426
16.75	32	48-8M0049447	48-8M0049448
16.5	32	48-8M0049469	48-8M0049470
16.25	32	48-8M0049491	48-8M0049492
16	32	48-8M0049513	48-8M0049514
18	33	48-8M0049339	48-8M0049340
17.75	33	48-8M0049361	48-8M0049362
17.5	33	48-8M0049383	48-8M0049384
17.25	33	48-8M0049405	48-8M0049406
17	33	48-8M0049427	48-8M0049428
16.75	33	48-8M0049449	48-8M0049450
16.5	33	48-8M0049471	48-8M0049472
16.25	33	48-8M0049493	48-8M0049494
16	33	48-8M0049515	48-8M0049516
18	34	48-8M0049341	48-8M0049342

Diameter (Inches)	Pitch	Pro Finished LH Rotation	Pro Finished RH Rotation
17.75	34	48-8M0049363	48-8M0049364
17.5	34	48-8M0049385	48-8M0049386
17.25	34	48-8M0049407	48-8M0049408
17	34	48-8M0049429	48-8M0049430
16.75	34	48-8M0049451	48-8M0049452
16.5	34	48-8M0049473	48-8M0049474
16.25	34	48-8M0049495	48-8M0049496
16	34	48-8M0049517	48-8M0049518
18	35	48-8M0049343	48-8M0049344
17.75	35	48-8M0049365	48-8M0049366
17.5	35	48-8M0049387	48-8M0049388
17.25	35	48-8M0049409	48-8M0049410
17	35	48-8M0049431	48-8M0049432
16.75	35	48-8M0049453	48-8M0049454
16.5	35	48-8M0049475	48-8M0049476
16.25	35	48-8M0049497	48-8M0049498
16	35	48-8M0049519	48-8M0049520
18	36	48-8M0049345	48-8M0049346
17.75	36	48-8M0049367	48-8M0049368
17.5	36	48-8M0049389	48-8M0049390
17.25	36	48-8M0049411	48-8M0049412
17	36	48-8M0049433	48-8M0049434
16.75	36	48-8M0049455	48-8M0049456
16.5	36	48-8M0049477	48-8M0049478
16.25	36	48-8M0049499	48-8M0049500
16	36	48-8M0049521	48-8M0049522
18	37	48-8M0049347	48-8M0049348
17.75	37	48-8M0049369	48-8M0049370
17.5	37	48-8M0049391	48-8M0049392
17.25	37	48-8M0049413	48-8M0049414
17	37	48-8M0049435	48-8M0049436
16.75	37	48-8M0049457	48-8M0049458
16.5	37	48-8M0049479	48-8M0049480
16.25	37	48-8M0049501	48-8M0049502
16	37	48-8M0049523	48-8M0049524
18	38	48-8M0049349	48-8M0049350
17.75	38	48-8M0049371	48-8M0049372
17.5	38	48-8M0049393	48-8M0049394
17.25	38	48-8M0049415	48-8M0049416
17	38	48-8M0049437	48-8M0049438
16.75	38	48-8M0049459	48-8M0049460
16.5	38	48-8M0049481	48-8M0049482
16.25	38	48-8M0049503	48-8M0049504
16	38	48-8M0049525	48-8M0049526
18	39	48-8M0049351	48-8M0049352
17.75	39	48-8M0049373	48-8M0049374
17.5	39	48-8M0049395	48-8M0049396
17.25	39	48-8M0049417	48-8M0049418
17	39	48-8M0049439	48-8M0049440
16.75	39	48-8M0049461	48-8M0049462
16.5	39	48-8M0049483	48-8M0049484
16.25	39	48-8M0049505	48-8M0049506
16	39	48-8M0049527	48-8M0049528
18	40	48-8M0049353	48-8M0049354
17.75	40	48-8M0049375	48-8M0049376
17.5	40	48-8M0049397	48-8M0049398
17.25	40	48-8M0049419	48-8M0049420
17	40	48-8M0049441	48-8M0049442
16.75	40	48-8M0049463	48-8M0049464
16.5	40	48-8M0049485	48-8M0049486
16.25	40	48-8M0049507	48-8M0049508
16	40	48-8M0049529	48-8M0049530

CNC Cleaver, 5 Blade, 18 Degree Rake - 1200 HP

IIIA, IV, V, VI, VII SSM, NXT1, M8
26 Spline hub with 1.75/1.88 in.(44.5/47.7mm) O.D. propeller shaft and 6 in. (152mm) hub length

Diameter (Inches)	Pitch	Pro Finished LH Rotation	Pro Finished RH Rotation
18	30	48-8M0013507	48-8M0013508
17.75	30	48-8M0013537	48-8M0013538
17.5	30	48-8M0013567	48-8M0013568
17.25	30	48-8M0013597	48-8M0013598
17	30	48-8M0013627	48-8M0013628
16.75	30	48-8M0013657	48-8M0013658
16.5	30	48-8M0013687	48-8M0013688
16.25	30	48-8M0013717	48-8M0013718
16	30	48-8M0013747	48-8M0013748
15.75	30	48-8M0013777	48-8M0013778
15.5	30	48-8M0013807	48-8M0013808
15.25	30	48-8M0013837	48-8M0013838
15	30	48-8M0013867	48-8M0013868
18	31	48-8M0013509	48-8M0013510
17.75	31	48-8M0013539	48-8M0013540
17.5	31	48-8M0013569	48-8M0013570
17.25	31	48-8M0013599	48-8M0013600
17	31	48-8M0013629	48-8M0013630
16.75	31	48-8M0013659	48-8M0013660
16.5	31	48-8M0013689	48-8M0013690
16.25	31	48-8M0013719	48-8M0013720
16	31	48-8M0013749	48-8M0013750
15.75	31	48-8M0013779	48-8M0013780
15.5	31	48-8M0013809	48-8M0013810
15.25	31	48-8M0013839	48-8M0013840
15	31	48-8M0013869	48-8M0013870
18	32	48-8M0013511	48-8M0013512
17.75	32	48-8M0013541	48-8M0013542
17.5	32	48-8M0013571	48-8M0013572
17.25	32	48-8M0013601	48-8M0013602
17	32	48-8M0013631	48-8M0013632
16.75	32	48-8M0013661	48-8M0013662
16.5	32	48-8M0013691	48-8M0013692
16.25	32	48-8M0013721	48-8M0013722
16	32	48-8M0013751	48-8M0013752
15.75	32	48-8M0013781	48-8M0013782
15.5	32	48-8M0013811	48-8M0013812
15.25	32	48-8M0013841	48-8M0013842
15	32	48-8M0013871	48-8M0013872

Diameter (Inches)	Pitch	Pro Finished LH Rotation	Pro Finished RH Rotation
18	33	48-8M0013513	48-8M0013514
17.75	33	48-8M0013543	48-8M0013544
17.5	33	48-8M0013573	48-8M0013574
17.25	33	48-8M0013603	48-8M0013604
17	33	48-8M0013633	48-8M0013634
16.75	33	48-8M0013663	48-8M0013664
16.5	33	48-8M0013693	48-8M0013694
16.25	33	48-8M0013723	48-8M0013724
16	33	48-8M0013753	48-8M0013754
15.75	33	48-8M0013783	48-8M0013784
15.5	33	48-8M0013813	48-8M0013814
15.25	33	48-8M0013843	48-8M0013844
15	33	48-8M0013873	48-8M0013874
18	34	48-8M0013515	48-8M0013516
17.75	34	48-8M0013545	48-8M0013546
17.5	34	48-8M0013575	48-8M0013576
17.25	34	48-8M0013605	48-8M0013606
17	34	48-8M0013635	48-8M0013636
16.75	34	48-8M0013665	48-8M0013666
16.5	34	48-8M0013695	48-8M0013696
16.25	34	48-8M0013725	48-8M0013726
16	34	48-8M0013755	48-8M0013756
15.75	34	48-8M0013785	48-8M0013786
15.5	34	48-8M0013815	48-8M0013816
15.25	34	48-8M0013845	48-8M0013846
15	34	48-8M0013875	48-8M0013876
18	35	48-8M0013517	48-8M0013518
17.75	35	48-8M0013547	48-8M0013548
17.5	35	48-8M0013577	48-8M0013578
17.25	35	48-8M0013607	48-8M0013608
17	35	48-8M0013637	48-8M0013638
16.75	35	48-8M0013667	48-8M0013668
16.5	35	48-8M0013697	48-8M0013698
16.25	35	48-8M0013727	48-8M0013728
16	35	48-8M0013757	48-8M0013758
15.75	35	48-8M0013787	48-8M0013788
15.5	35	48-8M0013817	48-8M0013818
15.25	35	48-8M0013847	48-8M0013848
15	35	48-8M0013877	48-8M0013878
18	36	48-8M0013519	48-8M0013520
17.75	36	48-8M0013549	48-8M0013550
17.5	36	48-8M0013579	48-8M0013580
17.25	36	48-8M0013609	48-8M0013610
17	36	48-8M0013639	48-8M0013640
16.75	36	48-8M0013669	48-8M0013670
16.5	36	48-8M0013699	48-8M0013700
16.25	36	48-8M0013729	48-8M0013730
16	36	48-8M0013759	48-8M0013760
15.75	36	48-8M0013789	48-8M0013790
15.5	36	48-8M0013819	48-8M0013820
15.25	36	48-8M0013849	48-8M0013850
15	36	48-8M0013879	48-8M0013880
18	37	48-8M0013521	48-8M0013522
17.75	37	48-8M0013551	48-8M0013552

Diameter (Inches)	Pitch	Pro Finished LH Rotation	Pro Finished RH Rotation
17.5	37	48-8M0013581	48-8M0013582
17.25	37	48-8M0013611	48-8M0013612
17	37	48-8M0013641	48-8M0013642
16.75	37	48-8M0013671	48-8M0013672
16.5	37	48-8M0013701	48-8M0013702
16.25	37	48-8M0013731	48-8M0013732
16	37	48-8M0013761	48-8M0013762
15.75	37	48-8M0013791	48-8M0013792
15.5	37	48-8M0013821	48-8M0013822
15.25	37	48-8M0013851	48-8M0013852
15	37	48-8M0013881	48-8M0013882
18	38	48-8M0013523	48-8M0013524
17.75	38	48-8M0013553	48-8M0013554
17.5	38	48-8M0013583	48-8M0013584
17.25	38	48-8M0013613	48-8M0013614
17	38	48-8M0013643	48-8M0013644
16.75	38	48-8M0013673	48-8M0013674
16.5	38	48-8M0013703	48-8M0013704
16.25	38	48-8M0013733	48-8M0013734
16	38	48-8M0013763	48-8M0013764
15.75	38	48-8M0013793	48-8M0013794
15.5	38	48-8M0013823	48-8M0013824
15.25	38	48-8M0013853	48-8M0013854
15	38	48-8M0013883	48-8M0013884
18	39	48-8M0013525	48-8M0013526
17.75	39	48-8M0013555	48-8M0013556
17.5	39	48-8M0013585	48-8M0013586
17.25	39	48-8M0013615	48-8M0013616
17	39	48-8M0013645	48-8M0013646
16.75	39	48-8M0013675	48-8M0013676
16.5	39	48-8M0013705	48-8M0013706
16.25	39	48-8M0013735	48-8M0013736
16	39	48-8M0013765	48-8M0013766
15.75	39	48-8M0013795	48-8M0013796
15.5	39	48-8M0013825	48-8M0013826
15.25	39	48-8M0013855	48-8M0013856
15	39	48-8M0013885	48-8M0013886
18	40	48-8M0013527	48-8M0013528
17.75	40	48-8M0013557	48-8M0013558
17.5	40	48-8M0013587	48-8M0013588
17.25	40	48-8M0013617	48-8M0013618
17	40	48-8M0013647	48-8M0013648
16.75	40	48-8M0013677	48-8M0013678
16.5	40	48-8M0013707	48-8M0013708
16.25	40	48-8M0013737	48-8M0013738
16	40	48-8M0013767	48-8M0013768
15.75	40	48-8M0013797	48-8M0013798
15.5	40	48-8M0013827	48-8M0013828
15.25	40	48-8M0013857	48-8M0013858
15	40	48-8M0013887	48-8M0013888

CNC Cleaver, 5 Blade, 18 Degree Rake - 900 HP

IIIA, IV, V, VI, VII SSM, NXT1
26 Spline hub with 1.75/1.88 in.(44.5/47.7mm) O.D. propeller shaft and 6 in. (152mm) hub length

Diameter (Inches)	Pitch	Pro Finished LH Rotation	Pro Finished RH Rotation
18	30	48-8M0014677	48-8M0014678
17.75	30	48-8M0014707	48-8M0014708
17.5	30	48-8M0014737	48-8M0014738
17.25	30	48-8M0014767	48-8M0014768
17	30	48-8M0014797	48-8M0014798
16.75	30	48-8M0014827	48-8M0014828
16.5	30	48-8M0014857	48-8M0014858
16.25	30	48-8M0014887	48-8M0014888
16	30	48-8M0014917	48-8M0014918
15.75	30	48-8M0014947	48-8M0014948
15.5	30	48-8M0014977	48-8M0014978
15.25	30	48-8M0015007	48-8M0015008
15	30	48-8M0015037	48-8M0015038
18	31	48-8M0014679	48-8M0014680
17.75	31	48-8M0014709	48-8M0014710
17.5	31	48-8M0014739	48-8M0014740
17.25	31	48-8M0014769	48-8M0014770
17	31	48-8M0014799	48-8M0014800
16.75	31	48-8M0014829	48-8M0014830
16.5	31	48-8M0014859	48-8M0014860
16.25	31	48-8M0014889	48-8M0014890
16	31	48-8M0014919	48-8M0014920
15.75	31	48-8M0014949	48-8M0014950
15.5	31	48-8M0014979	48-8M0014980
15.25	31	48-8M0015009	48-8M0015010
15	31	48-8M0015039	48-8M0015040
18	32	48-8M0014681	48-8M0014682
17.75	32	48-8M0014711	48-8M0014712
17.5	32	48-8M0014741	48-8M0014742
17.25	32	48-8M0014771	48-8M0014772
17	32	48-8M0014801	48-8M0014802
16.75	32	48-8M0014831	48-8M0014832
16.5	32	48-8M0014861	48-8M0014862
16.25	32	48-8M0014891	48-8M0014892
16	32	48-8M0014921	48-8M0014922
15.75	32	48-8M0014951	48-8M0014952
15.5	32	48-8M0014981	48-8M0014982
15.25	32	48-8M0015011	48-8M0015012
15	32	48-8M0015041	48-8M0015042
18	33	48-8M0014683	48-8M0014684
17.75	33	48-8M0014713	48-8M0014714
17.5	33	48-8M0014743	48-8M0014744
17.25	33	48-8M0014773	48-8M0014774
17	33	48-8M0014803	48-8M0014804
16.75	33	48-8M0014833	48-8M0014834
16.5	33	48-8M0014863	48-8M0014864
16.25	33	48-8M0014893	48-8M0014894
16	33	48-8M0014923	48-8M0014924
15.75	33	48-8M0014953	48-8M0014954
15.5	33	48-8M0014983	48-8M0014984
15.25	33	48-8M0015013	48-8M0015014
15	33	48-8M0015043	48-8M0015044
18	34	48-8M0014685	48-8M0014686
17.75	34	48-8M0014715	48-8M0014716
17.5	34	48-8M0014745	48-8M0014746
17.25	34	48-8M0014775	48-8M0014776
17	34	48-8M0014805	48-8M0014806
16.75	34	48-8M0014835	48-8M0014836
16.5	34	48-8M0014865	48-8M0014866
16.25	34	48-8M0014895	48-8M0014896
16	34	48-8M0014925	48-8M0014926
15.75	34	48-8M0014955	48-8M0014956
15.5	34	48-8M0014985	48-8M0014986
15.25	34	48-8M0015015	48-8M0015016
15	34	48-8M0015045	48-8M0015046
18	35	48-8M0014687	48-8M0014688
17.75	35	48-8M0014717	48-8M0014718
17.5	35	48-8M0014747	48-8M0014748
17.25	35	48-8M0014777	48-8M0014778
17	35	48-8M0014807	48-8M0014808
16.75	35	48-8M0014837	48-8M0014838
16.5	35	48-8M0014867	48-8M0014868
16.25	35	48-8M0014897	48-8M0014898
16	35	48-8M0014927	48-8M0014928
15.75	35	48-8M0014957	48-8M0014958
15.5	35	48-8M0014987	48-8M0014988
15.25	35	48-8M0015017	48-8M0015018
15	35	48-8M0015047	48-8M0015048
18	36	48-8M0014689	48-8M0014690
17.75	36	48-8M0014719	48-8M0014720
17.5	36	48-8M0014749	48-8M0014750
17.25	36	48-8M0014779	48-8M0014780
17	36	48-8M0014809	48-8M0014810
16.75	36	48-8M0014839	48-8M0014840
16.5	36	48-8M0014869	48-8M0014870
16.25	36	48-8M0014899	48-8M0014900
16	36	48-8M0014929	48-8M0014930
15.75	36	48-8M0014959	48-8M0014960
15.5	36	48-8M0014989	48-8M0014990
15.25	36	48-8M0015019	48-8M0015020
15	36	48-8M0015049	48-8M0015050
18	37	48-8M0014691	48-8M0014692
17.75	37	48-8M0014721	48-8M0014722
17.5	37	48-8M0014751	48-8M0014752
17.25	37	48-8M0014781	48-8M0014782
17	37	48-8M0014811	48-8M0014812
16.75	37	48-8M0014841	48-8M0014842
16.5	37	48-8M0014871	48-8M0014872
16.25	37	48-8M0014901	48-8M0014902
16	37	48-8M0014931	48-8M0014932
15.75	37	48-8M0014961	48-8M0014962
15.5	37	48-8M0014991	48-8M0014992
15.25	37	48-8M0015021	48-8M0015022

Diameter (Inches)	Pitch	Pro Finished LH Rotation	Pro Finished RH Rotation
15	37	48-8M0015051	48-8M0015052
18	38	48-8M0014693	48-8M0014694
17.75	38	48-8M0014723	48-8M0014724
17.5	38	48-8M0014753	48-8M0014754
17.25	38	48-8M0014783	48-8M0014784
17	38	48-8M0014813	48-8M0014814
16.75	38	48-8M0014843	48-8M0014844
16.5	38	48-8M0014873	48-8M0014874
16.25	38	48-8M0014903	48-8M0014904
16	38	48-8M0014933	48-8M0014934
15.75	38	48-8M0014963	48-8M0014964
15.5	38	48-8M0014993	48-8M0014994
15.25	38	48-8M0015023	48-8M0015024
15	38	48-8M0015053	48-8M0015054
18	39	48-8M0014695	48-8M0014696
17.75	39	48-8M0014725	48-8M0014726
17.5	39	48-8M0014755	48-8M0014756
17.25	39	48-8M0014785	48-8M0014786
17	39	48-8M0014815	48-8M0014816
16.75	39	48-8M0014845	48-8M0014846
16.5	39	48-8M0014875	48-8M0014876
16.25	39	48-8M0014905	48-8M0014906
16	39	48-8M0014935	48-8M0014936
15.75	39	48-8M0014965	48-8M0014966
15.5	39	48-8M0014995	48-8M0014996
15.25	39	48-8M0015025	48-8M0015026
15	39	48-8M0015055	48-8M0015056
18	40	48-8M0014697	48-8M0014698
17.75	40	48-8M0014727	48-8M0014728
17.5	40	48-8M0014757	48-8M0014758
17.25	40	48-8M0014787	48-8M0014788
17	40	48-8M0014817	48-8M0014818
16.75	40	48-8M0014847	48-8M0014848
16.5	40	48-8M0014877	48-8M0014878
16.25	40	48-8M0014907	48-8M0014908
16	40	48-8M0014937	48-8M0014938
15.75	40	48-8M0014967	48-8M0014968
15.5	40	48-8M0014997	48-8M0014998
15.25	40	48-8M0015027	48-8M0015028
15	40	48-8M0015057	48-8M0015058

CNC CLEAVER 5 BLADE 21 DEGREE RAKE PRO FINISHED STERNDRIVE PROPELLER



CNC Cleaver, 5 Blade, 21 Degree Rake - 1550 HP

IIIA, IV, V, VI, VII SSM, NXT1, M8
26 Spline hub with 1.75/1.88 in.(44.5/47.7mm) O.D. propeller shaft and 6 in. (152mm) hub length

Diameter (Inches)	Pitch	Pro Finished LH Rotation	Pro Finished RH Rotation
18	30	48-8M0049531	48-8M0049532
17.75	30	48-8M0049553	48-8M0049554
17.5	30	48-8M0049575	48-8M0049576
17.25	30	48-8M0049597	48-8M0049598
17	30	48-8M0049619	48-8M0049620
16.75	30	48-8M0049641	48-8M0049642
16.5	30	48-8M0049663	48-8M0049664
16.25	30	48-8M0049685	48-8M0049686
16	30	48-8M0049707	48-8M0049708
18	31	48-8M0049533	48-8M0049534
17.75	31	48-8M0049555	48-8M0049556
17.5	31	48-8M0049577	48-8M0049578
17.25	31	48-8M0049599	48-8M0049600
17	31	48-8M0049621	48-8M0049622
16.75	31	48-8M0049643	48-8M0049644
16.5	31	48-8M0049665	48-8M0049666
16.25	31	48-8M0049687	48-8M0049688
16	31	48-8M0049709	48-8M0049710
18	32	48-8M0049535	48-8M0049536
17.75	32	48-8M0049557	48-8M0049558
17.5	32	48-8M0049579	48-8M0049580
17.25	32	48-8M0049601	48-8M0049602
17	32	48-8M0049623	48-8M0049624
16.75	32	48-8M0049645	48-8M0049646
16.5	32	48-8M0049667	48-8M0049668
16.25	32	48-8M0049689	48-8M0049690
16	32	48-8M0049711	48-8M0049712
18	33	48-8M0049537	48-8M0049538
17.75	33	48-8M0049559	48-8M0049560
17.5	33	48-8M0049581	48-8M0049582
17.25	33	48-8M0049603	48-8M0049604
17	33	48-8M0049625	48-8M0049626
16.75	33	48-8M0049647	48-8M0049648
16.5	33	48-8M0049669	48-8M0049670
16.25	33	48-8M0049691	48-8M0049692
16	33	48-8M0049713	48-8M0049714
18	34	48-8M0049539	48-8M0049540
17.75	34	48-8M0049561	48-8M0049562
17.5	34	48-8M0049583	48-8M0049584
17.25	34	48-8M0049605	48-8M0049606
17	34	48-8M0049627	48-8M0049628
16.75	34	48-8M0049649	48-8M0049650
16.5	34	48-8M0049671	48-8M0049672
16.25	34	48-8M0049693	48-8M0049694
16	34	48-8M0049715	48-8M0049716
18	35	48-8M0049541	48-8M0049542
17.75	35	48-8M0049563	48-8M0049564
17.5	35	48-8M0049585	48-8M0049586
17.25	35	48-8M0049607	48-8M0049608

Diameter (Inches)	Pitch	Pro Finished LH Rotation	Pro Finished RH Rotation
17	35	48-8M0049629	48-8M0049630
16.75	35	48-8M0049651	48-8M0049652
16.5	35	48-8M0049673	48-8M0049674
16.25	35	48-8M0049695	48-8M0049696
16	35	48-8M0049717	48-8M0049718
18	36	48-8M0049543	48-8M0049544
17.75	36	48-8M0049565	48-8M0049566
17.5	36	48-8M0049587	48-8M0049588
17.25	36	48-8M0049609	48-8M0049610
17	36	48-8M0049631	48-8M0049632
16.75	36	48-8M0049653	48-8M0049654
16.5	36	48-8M0049675	48-8M0049676
16.25	36	48-8M0049697	48-8M0049698
16	36	48-8M0049719	48-8M0049720
18	37	48-8M0049545	48-8M0049546
17.75	37	48-8M0049567	48-8M0049568
17.5	37	48-8M0049589	48-8M0049590
17.25	37	48-8M0049611	48-8M0049612
17	37	48-8M0049633	48-8M0049634
16.75	37	48-8M0049655	48-8M0049656
16.5	37	48-8M0049677	48-8M0049678
16.25	37	48-8M0049699	48-8M0049700
16	37	48-8M0049721	48-8M0049722
18	38	48-8M0049547	48-8M0049548
17.75	38	48-8M0049569	48-8M0049570
17.5	38	48-8M0049591	48-8M0049592
17.25	38	48-8M0049613	48-8M0049614
17	38	48-8M0049635	48-8M0049636
16.75	38	48-8M0049657	48-8M0049658
16.5	38	48-8M0049679	48-8M0049680
16.25	38	48-8M0049701	48-8M0049702
16	38	48-8M0049723	48-8M0049724
18	39	48-8M0049549	48-8M0049550
17.75	39	48-8M0049571	48-8M0049572
17.5	39	48-8M0049593	48-8M0049594
17.25	39	48-8M0049615	48-8M0049616
17	39	48-8M0049637	48-8M0049638
16.75	39	48-8M0049659	48-8M0049660
16.5	39	48-8M0049681	48-8M0049682
16.25	39	48-8M0049703	48-8M0049704
16	39	48-8M0049725	48-8M0049726
18	40	48-8M0049551	48-8M0049552
17.75	40	48-8M0049573	48-8M0049574
17.5	40	48-8M0049595	48-8M0049596
17.25	40	48-8M0049617	48-8M0049618
17	40	48-8M0049639	48-8M0049640
16.75	40	48-8M0049661	48-8M0049662
16.5	40	48-8M0049683	48-8M0049684
16.25	40	48-8M0049705	48-8M0049706
16	40	48-8M0049727	48-8M0049728

CNC Cleaver, 5 Blade, 21 Degree Rake - 1200 HP

IIIA, IV, V, VI, VII SSM, NXT1, M8
26 Spline hub with 1.75/1.88 in.(44.5/47.7mm) O.D. propeller shaft and 6 in. (152mm) hub length

Diameter (Inches)	Pitch	Pro Finished LH Rotation	Pro Finished RH Rotation
18	30	48-8M0017089	48-8M0017090
17.75	30	48-8M0017119	48-8M0017120
17.5	30	48-8M0017149	48-8M0017150
17.25	30	48-8M0017179	48-8M0014180
17	30	48-8M0017209	48-8M0017210
16.75	30	48-8M0017239	48-8M0017240
16.5	30	48-8M0017269	48-8M0014270
16.25	30	48-8M0017299	48-8M0017300
16	30	48-8M0017329	48-8M0017330
15.75	30	48-8M0017359	48-8M0017360
15.5	30	48-8M0017389	48-8M0017390
15.25	30	48-8M0017419	48-8M0017420
15	30	48-8M0017449	48-8M0017450
18	31	48-8M0017091	48-8M0017092
17.75	31	48-8M0017121	48-8M0017122
17.5	31	48-8M0017151	48-8M0017152
17.25	31	48-8M0017181	48-8M0017182
17	31	48-8M0017211	48-8M0017212
16.75	31	48-8M0017241	48-8M0017242
16.5	31	48-8M0017271	48-8M0017272
16.25	31	48-8M0017301	48-8M0017302
16	31	48-8M0017331	48-8M0017332
15.75	31	48-8M0017361	48-8M0017362
15.5	31	48-8M0017391	48-8M0017392
15.25	31	48-8M0017421	48-8M0017422
15	31	48-8M0017451	48-8M0017452
18	32	48-8M0017093	48-8M0017094
17.75	32	48-8M0017123	48-8M0017124
17.5	32	48-8M0017153	48-8M0017154
17.25	32	48-8M0017183	48-8M0017184
17	32	48-8M0017213	48-8M0017214
16.75	32	48-8M0017243	48-8M0017244
16.5	32	48-8M0017273	48-8M0017274
16.25	32	48-8M0017303	48-8M0017304
16	32	48-8M0017333	48-8M0017334
15.75	32	48-8M0017363	48-8M0017364
15.5	32	48-8M0017393	48-8M0017394
15.25	32	48-8M0017423	48-8M0017424
15	32	48-8M0017453	48-8M0017454
18	33	48-8M0017095	48-8M0017096
17.75	33	48-8M0017125	48-8M0017126
17.5	33	48-8M0017155	48-8M0017156
17.25	33	48-8M0017185	48-8M0017186
17	33	48-8M0017215	48-8M0017216
16.75	33	48-8M0017245	48-8M0017246
16.5	33	48-8M0017275	48-8M0017276
16.25	33	48-8M0017305	48-8M0017306
16	33	48-8M0017335	48-8M0017336
15.75	33	48-8M0017365	48-8M0017366

Diameter (Inches)	Pitch	Pro Finished LH Rotation	Pro Finished RH Rotation
15.5	33	48-8M0017395	48-8M0017396
15.25	33	48-8M0017425	48-8M0017426
15	33	48-8M0017455	48-8M0017456
18	34	48-8M0017097	48-8M0017098
17.75	34	48-8M0017127	48-8M0017128
17.5	34	48-8M0017157	48-8M0017158
17.25	34	48-8M0017187	48-8M0017188
17	34	48-8M0017217	48-8M0017218
16.75	34	48-8M0017247	48-8M0017248
16.5	34	48-8M0017277	48-8M0017278
16.25	34	48-8M0017307	48-8M0017308
16	34	48-8M0017337	48-8M0017338
15.75	34	48-8M0017367	48-8M0017368
15.5	34	48-8M0017397	48-8M0017398
15.25	34	48-8M0017427	48-8M0017428
15	34	48-8M0017457	48-8M0017458
18	35	48-8M0017099	48-8M0017100
17.75	35	48-8M0017129	48-8M0017130
17.5	35	48-8M0017159	48-8M0017160
17.25	35	48-8M0017189	48-8M0017190
17	35	48-8M0017219	48-8M0017220
16.75	35	48-8M0017249	48-8M0017250
16.5	35	48-8M0017279	48-8M0017280
16.25	35	48-8M0017309	48-8M0017310
16	35	48-8M0017339	48-8M0017340
15.75	35	48-8M0017369	48-8M0017370
15.5	35	48-8M0017399	48-8M0017400
15.25	35	48-8M0017429	48-8M0017430
15	35	48-8M0017459	48-8M0017460
18	36	48-8M0017101	48-8M0017102
17.75	36	48-8M0017131	48-8M0017132
17.5	36	48-8M0017161	48-8M0017162
17.25	36	48-8M0017191	48-8M0017192
17	36	48-8M0017221	48-8M0017222
16.75	36	48-8M0017251	48-8M0017252
16.5	36	48-8M0017281	48-8M0017282
16.25	36	48-8M0017311	48-8M0017312
16	36	48-8M0017341	48-8M0017342
15.75	36	48-8M0017371	48-8M0017372
15.5	36	48-8M0017401	48-8M0017402
15.25	36	48-8M0017431	48-8M0017432
15	36	48-8M0017461	48-8M0017462
18	37	48-8M0017103	48-8M0017104
17.75	37	48-8M0017133	48-8M0017134
17.5	37	48-8M0017163	48-8M0017164
17.25	37	48-8M0017193	48-8M0017194
17	37	48-8M0017223	48-8M0017224
16.75	37	48-8M0017253	48-8M0017254
16.5	37	48-8M0017283	48-8M0017284
16.25	37	48-8M0017313	48-8M0017314
16	37	48-8M0017343	48-8M0017344
15.75	37	48-8M0017373	48-8M0017374
15.5	37	48-8M0017403	48-8M0017404
15.25	37	48-8M0017433	48-8M0017434

Diameter (Inches)	Pitch	Pro Finished LH Rotation	Pro Finished RH Rotation
15	37	48-8M0017463	48-8M0017464
18	38	48-8M0017105	48-8M0017106
17.75	38	48-8M0017135	48-8M0017136
17.5	38	48-8M0017165	48-8M0017166
17.25	38	48-8M0017195	48-8M0017196
17	38	48-8M0017225	48-8M0017226
16.75	38	48-8M0017255	48-8M0017256
16.5	38	48-8M0017285	48-8M0017286
16.25	38	48-8M0017315	48-8M0017316
16	38	48-8M0017345	48-8M0017346
15.75	38	48-8M0017375	48-8M0017376
15.5	38	48-8M0017405	48-8M0017406
15.25	38	48-8M0017435	48-8M0017436
15	38	48-8M0017465	48-8M0017466
18	39	48-8M0017107	48-8M0017108
17.75	39	48-8M0017137	48-8M0017138
17.5	39	48-8M0017167	48-8M0017168
17.25	39	48-8M0017197	48-8M0017198
17	39	48-8M0017227	48-8M0017228
16.75	39	48-8M0017257	48-8M0017258
16.5	39	48-8M0017287	48-8M0017288
16.25	39	48-8M0017317	48-8M0017318
16	39	48-8M0017347	48-8M0017348
15.75	39	48-8M0017377	48-8M0017378
15.5	39	48-8M0017407	48-8M0017408
15.25	39	48-8M0017437	48-8M0017438
15	39	48-8M0017467	48-8M0017468
18	40	48-8M0017109	48-8M0017110
17.75	40	48-8M0017139	48-8M0017140
17.5	40	48-8M0017169	48-8M0017170
17.25	40	48-8M0017199	48-8M0017200
17	40	48-8M0017229	48-8M0017230
16.75	40	48-8M0017259	48-8M0017260
16.5	40	48-8M0017289	48-8M0017290
16.25	40	48-8M0017319	48-8M0017320
16	40	48-8M0017349	48-8M0017350
15.75	40	48-8M0017379	48-8M0017380
15.5	40	48-8M0017409	48-8M0017410
15.25	40	48-8M0017439	48-8M0017440
15	40	48-8M0017469	48-8M0017470

CNC Cleaver, 5 Blade, 21 Degree Rake - 900 HP

IIIA, IV, V, VI, VII SSM, NXT1
26 Spline hub with 1.75/1.88 in.(44.5/47.7mm) O.D. propeller shaft and 6 in. (152mm) hub length

Diameter (Inches)	Pitch	Pro Finished LH Rotation	Pro Finished RH Rotation
18	30	48-8M0018259	48-8M0018260
17.75	30	48-8M0018289	48-8M0018290
17.5	30	48-8M0018319	48-8M0018320
17.25	30	48-8M0018349	48-8M0018350
17	30	48-8M0018379	48-8M0018380
16.75	30	48-8M0018409	48-8M0018410
16.5	30	48-8M0018439	48-8M0018440

Diameter (Inches)	Pitch	Pro Finished LH Rotation	Pro Finished RH Rotation
16.25	30	48-8M0018469	48-8M0018470
16	30	48-8M0018499	48-8M0018500
15.75	30	48-8M0018529	48-8M0018530
15.5	30	48-8M0018559	48-8M0018560
15.25	30	48-8M0018589	48-8M0018590
15	30	48-8M0018619	48-8M0018620
18	31	48-8M0018261	48-8M0018262
17.75	31	48-8M0018291	48-8M0018292
17.5	31	48-8M0018321	48-8M0018322
17.25	31	48-8M0018351	48-8M0018352
17	31	48-8M0018381	48-8M0018382
16.75	31	48-8M0018411	48-8M0018412
16.5	31	48-8M0018441	48-8M0018442
16.25	31	48-8M0018471	48-8M0018472
16	31	48-8M0018501	48-8M0018502
15.75	31	48-8M0018531	48-8M0018532
15.5	31	48-8M0018561	48-8M0018562
15.25	31	48-8M0018591	48-8M0018592
15	31	48-8M0018621	48-8M0018622
18	32	48-8M0018263	48-8M0018264
17.75	32	48-8M0018293	48-8M0018294
17.5	32	48-8M0018323	48-8M0018324
17.25	32	48-8M0018353	48-8M0018354
17	32	48-8M0018383	48-8M0018384
16.75	32	48-8M0018413	48-8M0018414
16.5	32	48-8M0018443	48-8M0018444
16.25	32	48-8M0018473	48-8M0018474
16	32	48-8M0018503	48-8M0018504
15.75	32	48-8M0018533	48-8M0018534
15.5	32	48-8M0018563	48-8M0018564
15.25	32	48-8M0018593	48-8M0018594
15	32	48-8M0018623	48-8M0018624
18	33	48-8M0018265	48-8M0018266
17.75	33	48-8M0018295	48-8M0018296
17.5	33	48-8M0018325	48-8M0018326
17.25	33	48-8M0018355	48-8M0018356
17	33	48-8M0018385	48-8M0018386
16.75	33	48-8M0018415	48-8M0018416
16.5	33	48-8M0018445	48-8M0018446
16.25	33	48-8M0018475	48-8M0018476
16	33	48-8M0018505	48-8M0018506
15.75	33	48-8M0018535	48-8M0018536
15.5	33	48-8M0018565	48-8M0018566
15.25	33	48-8M0018595	48-8M0018596
15	33	48-8M0018625	48-8M0018626
18	34	48-8M0018267	48-8M0018268
17.75	34	48-8M0018297	48-8M0018298
17.5	34	48-8M0018327	48-8M0018328
17.25	34	48-8M0018357	48-8M0018358
17	34	48-8M0018387	48-8M0018388
16.75	34	48-8M0018417	48-8M0018418
16.5	34	48-8M0018447	48-8M0018448
16.25	34	48-8M0018477	48-8M0018478
16	34	48-8M0018507	48-8M0018508

Diameter (Inches)	Pitch	Pro Finished LH Rotation	Pro Finished RH Rotation
15.75	34	48-8M0018537	48-8M0018538
15.5	34	48-8M0018567	48-8M0018568
15.25	34	48-8M0018597	48-8M0018598
15	34	48-8M0018627	48-8M0018628
18	35	48-8M0018269	48-8M0018270
17.75	35	48-8M0018299	48-8M0018300
17.5	35	48-8M0018329	48-8M0018330
17.25	35	48-8M0018359	48-8M0018360
17	35	48-8M0018389	48-8M0018390
16.75	35	48-8M0018419	48-8M0018420
16.5	35	48-8M0018449	48-8M0018450
16.25	35	48-8M0018479	48-8M0018480
16	35	48-8M0018509	48-8M0018510
15.75	35	48-8M0018539	48-8M0018540
15.5	35	48-8M0018569	48-8M0018570
15.25	35	48-8M0018599	48-8M0018600
15	35	48-8M0018629	48-8M0018630
18	36	48-8M0018271	48-8M0018272
17.75	36	48-8M0018301	48-8M0018302
17.5	36	48-8M0018331	48-8M0018332
17.25	36	48-8M0018361	48-8M0018362
17	36	48-8M0018391	48-8M0018392
16.75	36	48-8M0018421	48-8M0018422
16.5	36	48-8M0018451	48-8M0018452
16.25	36	48-8M0018481	48-8M0018482
16	36	48-8M0018511	48-8M0018512
15.75	36	48-8M0018541	48-8M0018542
15.5	36	48-8M0018571	48-8M0018572
15.25	36	48-8M0018601	48-8M0018602
15	36	48-8M0018631	48-8M0018632
18	37	48-8M0018273	48-8M0018274
17.75	37	48-8M0018303	48-8M0018304
17.5	37	48-8M0018333	48-8M0018334
17.25	37	48-8M0018363	48-8M0018364
17	37	48-8M0018393	48-8M0018394
16.75	37	48-8M0018423	48-8M0018424
16.5	37	48-8M0018453	48-8M0018454
16.25	37	48-8M0018483	48-8M0018484
16	37	48-8M0018513	48-8M0018514
15.75	37	48-8M0018543	48-8M0018544
15.5	37	48-8M0018573	48-8M0018574
15.25	37	48-8M0018603	48-8M0018604
15	37	48-8M0018633	48-8M0018634
18	38	48-8M0018275	48-8M0018276
17.75	38	48-8M0018305	48-8M0018306
17.5	38	48-8M0018335	48-8M0018336
17.25	38	48-8M0018365	48-8M0018366
17	38	48-8M0018395	48-8M0018396
16.75	38	48-8M0018425	48-8M0018426
16.5	38	48-8M0018455	48-8M0018456
16.25	38	48-8M0018485	48-8M0018486
16	38	48-8M0018515	48-8M0018516
15.75	38	48-8M0018545	48-8M0018546
15.5	38	48-8M0018575	48-8M0018576

Diameter (Inches)	Pitch	Pro Finished LH Rotation	Pro Finished RH Rotation
15.25	38	48-8M0018605	48-8M0018606
15	38	48-8M0018635	48-8M0018636
18	39	48-8M0018277	48-8M0018278
17.75	39	48-8M0018307	48-8M0018308
17.5	39	48-8M0018337	48-8M0018338
17.25	39	48-8M0018367	48-8M0018368
17	39	48-8M0018397	48-8M0018398
16.75	39	48-8M0018427	48-8M0018428
16.5	39	48-8M0018457	48-8M0018458
16.25	39	48-8M0018487	48-8M0018488
16	39	48-8M0018517	48-8M0018518
15.75	39	48-8M0018547	48-8M0018548
15.5	39	48-8M0018577	48-8M0018578
15.25	39	48-8M0018607	48-8M0018608
15	39	48-8M0018637	48-8M0018638
18	40	48-8M0018279	48-8M0018280
17.75	40	48-8M0018309	48-8M0018310
17.5	40	48-8M0018339	48-8M0018340
17.25	40	48-8M0018369	48-8M0018370
17	40	48-8M0018399	48-8M0018400
16.75	40	48-8M0018429	48-8M0018430
16.5	40	48-8M0018459	48-8M0018460
16.25	40	48-8M0018489	48-8M0018490
16	40	48-8M0018519	48-8M0018520
15.75	40	48-8M0018549	48-8M0018550
15.5	40	48-8M0018579	48-8M0018580
15.25	40	48-8M0018609	48-8M0018610
15	40	48-8M0018639	48-8M0018640

CNC CLEAVER 6 BLADE 15 DEGREE RAKE LAB FINISHED STERNDRIVE PROPELLER



CNC Cleaver, 6 Blade, 15 Degree Rake - 1200 HP

IIIA, IV, V, VI, VII SSM, NXT1, M8
26 Spline hub with 1.75/1.88 in.(44.5/47.7mm) O.D. propeller shaft and 6 in. (152mm) hub length

Diameter (Inches)	Pitch	Lab Finished LH Rotation	Lab Finished RH Rotation
18	26	48-8M0002667	48-8M0002668
17.75	26	48-8M0002697	48-8M0002698
17.5	26	48-8M0002727	48-8M0002728
17.25	26	48-8M0002757	48-8M0002758
17	26	48-8M0002787	48-8M0002788
16.75	26	48-8M0002817	48-8M0002818
16.5	26	48-8M0002847	48-8M0002848

Diameter (Inches)	Pitch	Lab Finished LH Rotation	Lab Finished RH Rotation
16.25	26	48-8M0002877	48-8M0002878
16	26	48-8M0002907	48-8M0002908
15.75	26	48-8M0002937	48-8M0002938
15.5	26	48-8M0002967	48-8M0002968
15.25	26	48-8M0002997	48-8M0002998
15	26	48-8M0003027	48-8M0003028
18	27	48-8M0002669	48-8M0002670
17.75	27	48-8M0002699	48-8M0002700
17.5	27	48-8M0002729	48-8M0002730
17.25	27	48-8M0002759	48-8M0002760
17	27	48-8M0002789	48-8M0002790
16.75	27	48-8M0002819	48-8M0002820
16.5	27	48-8M0002849	48-8M0002850
16.25	27	48-8M0002879	48-8M0002880
16	27	48-8M0002909	48-8M0002910
15.75	27	48-8M0002939	48-8M0002940
15.5	27	48-8M0002969	48-8M0002970
15.25	27	48-8M0002999	48-8M0003000
15	27	48-8M0003029	48-8M0003030
18	28	48-8M0002671	48-8M0002672
17.75	28	48-8M0002701	48-8M0002702
17.5	28	48-8M0002731	48-8M0002732
17.25	28	48-8M0002761	48-8M0002762
17	28	48-8M0002791	48-8M0002792
16.75	28	48-8M0002821	48-8M0002822
16.5	28	48-8M0002851	48-8M0002852
16.25	28	48-8M0002881	48-8M0002882
16	28	48-8M0002911	48-8M0002912
15.75	28	48-8M0002941	48-8M0002942
15.5	28	48-8M0002971	48-8M0002972
15.25	28	48-8M0003001	48-8M0003002
15	28	48-8M0003031	48-8M0003032
18	29	48-8M0002673	48-8M0002674
17.75	29	48-8M0002703	48-8M0002704
17.5	29	48-8M0002733	48-8M0002734
17.25	29	48-8M0002763	48-8M0002764
17	29	48-8M0002793	48-8M0002794
16.75	29	48-8M0002823	48-8M0002824
16.5	29	48-8M0002853	48-8M0002854
16.25	29	48-8M0002883	48-8M0002884
16	29	48-8M0002913	48-8M0002914
15.75	29	48-8M0002943	48-8M0002944
15.5	29	48-8M0002973	48-8M0002974
15.25	29	48-8M0003003	48-8M0003004
15	29	48-8M0003033	48-8M0003034
18	30	48-8M0002675	48-8M0002676
17.75	30	48-8M0002705	48-8M0002706
17.5	30	48-8M0002735	48-8M0002736
17.25	30	48-8M0002765	48-8M0002766
17	30	48-8M0002795	48-8M0002796
16.75	30	48-8M0002825	48-8M0002826
16.5	30	48-8M0002855	48-8M0002856
16.25	30	48-8M0002885	48-8M0002886
16	30	48-8M0002915	48-8M0002916

Diameter (Inches)	Pitch	Lab Finished LH Rotation	Lab Finished RH Rotation
15.75	30	48-8M0002945	48-8M0002946
15.5	30	48-8M0002975	48-8M0002976
15.25	30	48-8M0003005	48-8M0003006
15	30	48-8M0003035	48-8M0003036
18	31	48-8M0002677	48-8M0002678
17.75	31	48-8M0002707	48-8M0002708
17.5	31	48-8M0002737	48-8M0002738
17.25	31	48-8M0002767	48-8M0002768
17	31	48-8M0002797	48-8M0002798
16.75	31	48-8M0002827	48-8M0002828
16.5	31	48-8M0002857	48-8M0002858
16.25	31	48-8M0002887	48-8M0002888
16	31	48-8M0002917	48-8M0002918
15.75	31	48-8M0002947	48-8M0002948
15.5	31	48-8M0002977	48-8M0002978
15.25	31	48-8M0003007	48-8M0003008
15	31	48-8M0003037	48-8M0003038
18	32	48-8M0002679	48-8M0002680
17.75	32	48-8M0002709	48-8M0002710
17.5	32	48-8M0002739	48-8M0002740
17.25	32	48-8M0002769	48-8M0002770
17	32	48-8M0002799	48-8M0002800
16.75	32	48-8M0002829	48-8M0002830
16.5	32	48-8M0002859	48-8M0002860
16.25	32	48-8M0002889	48-8M0002890
16	32	48-8M0002919	48-8M0002920
15.75	32	48-8M0002949	48-8M0002950
15.5	32	48-8M0002979	48-8M0002980
15.25	32	48-8M0003009	48-8M0003010
15	32	48-8M0003039	48-8M0003040
18	33	48-8M0002681	48-8M0002682
17.75	33	48-8M0002711	48-8M0002712
17.5	33	48-8M0002741	48-8M0002742
17.25	33	48-8M0002771	48-8M0002772
17	33	48-8M0002801	48-8M0002802
16.75	33	48-8M0002831	48-8M0002832
16.5	33	48-8M0002861	48-8M0002862
16.25	33	48-8M0002891	48-8M0002892
16	33	48-8M0002921	48-8M0002922
15.75	33	48-8M0002951	48-8M0002952
15.5	33	48-8M0002981	48-8M0002982
15.25	33	48-8M0003011	48-8M0003012
15	33	48-8M0003041	48-8M0003042
18	34	48-8M0002683	48-8M0002684
17.75	34	48-8M0002713	48-8M0002714
17.5	34	48-8M0002743	48-8M0002744
17.25	34	48-8M0002773	48-8M0002774
17	34	48-8M0002803	48-8M0002804
16.75	34	48-8M0002833	48-8M0002834
16.5	34	48-8M0002863	48-8M0002864
16.25	34	48-8M0002893	48-8M0002894
16	34	48-8M0002923	48-8M0002924
15.75	34	48-8M0002953	48-8M0002954
15.5	34	48-8M0002983	48-8M0002984

Diameter (Inches)	Pitch	Lab Finished LH Rotation	Lab Finished RH Rotation
15.25	34	48-8M0003013	48-8M0003014
15	34	48-8M0003043	48-8M0003044
18	35	48-8M0002685	48-8M0002686
17.75	35	48-8M0002715	48-8M0002716
17.5	35	48-8M0002745	48-8M0002746
17.25	35	48-8M0002775	48-8M0002776
17	35	48-8M0002805	48-8M0002806
16.75	35	48-8M0002835	48-8M0002836
16.5	35	48-8M0002865	48-8M0002866
16.25	35	48-8M0002895	48-8M0002896
16	35	48-8M0002925	48-8M0002926
15.75	35	48-8M0002955	48-8M0002956
15.5	35	48-8M0002985	48-8M0002986
15.25	35	48-8M0003015	48-8M0003016
15	35	48-8M0003045	48-8M0003046
18	36	48-8M0002687	48-8M0002688
17.75	36	48-8M0002717	48-8M0002718
17.5	36	48-8M0002747	48-8M0002748
17.25	36	48-8M0002777	48-8M0002778
17	36	48-8M0002807	48-8M0002808
16.75	36	48-8M0002837	48-8M0002838
16.5	36	48-8M0002867	48-8M0002868
16.25	36	48-8M0002897	48-8M0002898
16	36	48-8M0002927	48-8M0002928
15.75	36	48-8M0002957	48-8M0002958
15.5	36	48-8M0002987	48-8M0002988
15.25	36	48-8M0003017	48-8M0003018
15	36	48-8M0003047	48-8M0003048
18	37	48-8M0002689	48-8M0002690
17.75	37	48-8M0002719	48-8M0002720
17.5	37	48-8M0002749	48-8M0002750
17.25	37	48-8M0002779	48-8M0002780
17	37	48-8M0002809	48-8M0002810
16.75	37	48-8M0002839	48-8M0002840
16.5	37	48-8M0002869	48-8M0002870
16.25	37	48-8M0002899	48-8M0002900
16	37	48-8M0002929	48-8M0002930
15.75	37	48-8M0002959	48-8M0002960
15.5	37	48-8M0002989	48-8M0002990
15.25	37	48-8M0003019	48-8M0003020
15	37	48-8M0003049	48-8M0003050
18	38	48-8M0002691	48-8M0002692
17.75	38	48-8M0002721	48-8M0002722
17.5	38	48-8M0002751	48-8M0002752
17.25	38	48-8M0002781	48-8M0002782
17	38	48-8M0002811	48-8M0002812
16.75	38	48-8M0002841	48-8M0002842
16.5	38	48-8M0002871	48-8M0002872
16.25	38	48-8M0002901	48-8M0002902
16	38	48-8M0002931	48-8M0002932
15.75	38	48-8M0002961	48-8M0002962
15.5	38	48-8M0002991	48-8M0002992
15.25	38	48-8M0003021	48-8M0003022
15	38	48-8M0003051	48-8M0003052

Diameter (Inches)	Pitch	Lab Finished LH Rotation	Lab Finished RH Rotation
18	39	48-8M0002693	48-8M0002694
17.75	39	48-8M0002723	48-8M0002724
17.5	39	48-8M0002753	48-8M0002754
17.25	39	48-8M0002783	48-8M0002784
17	39	48-8M0002813	48-8M0002814
16.75	39	48-8M0002843	48-8M0002844
16.5	39	48-8M0002873	48-8M0002874
16.25	39	48-8M0002903	48-8M0002904
16	39	48-8M0002933	48-8M0002934
15.75	39	48-8M0002963	48-8M0002964
15.5	39	48-8M0002993	48-8M0002994
15.25	39	48-8M0003023	48-8M0003024
15	39	48-8M0003053	48-8M0003054
18	40	48-8M0002695	48-8M0002696
17.75	40	48-8M0002725	48-8M0002726
17.5	40	48-8M0002755	48-8M0002756
17.25	40	48-8M0002785	48-8M0002786
17	40	48-8M0002815	48-8M0002816
16.75	40	48-8M0002845	48-8M0002846
16.5	40	48-8M0002875	48-8M0002876
16.25	40	48-8M0002905	48-8M0002906
16	40	48-8M0002935	48-8M0002936
15.75	40	48-8M0002965	48-8M0002966
15.5	40	48-8M0002995	48-8M0002996
15.25	40	48-8M0003025	48-8M0003026
15	40	48-8M0003055	48-8M0003056

CNC Cleaver, 6 Blade, 15 Degree Rake - 900 HP

IIIA, IV, V, VI, VII SSM, NXT1, M8
26 Spline hub with 1.75/1.88 in.(44.5/47.7mm) O.D. propeller shaft and 6 in. (152mm) hub length

Diameter (Inches)	Pitch	Lab Finished LH Rotation	Lab Finished RH Rotation
18	26	48-8M0003837	48-8M0003838
17.75	26	48-8M0003867	48-8M0003868
17.5	26	48-8M0003897	48-8M0003898
17.25	26	48-8M0003927	48-8M0003928
17	26	48-8M0003957	48-8M0003958
16.75	26	48-8M0003987	48-8M0003988
16.5	26	48-8M0004017	48-8M0004018
16.25	26	48-8M0004047	48-8M0004048
16	26	48-8M0004077	48-8M0004078
15.75	26	48-8M0004107	48-8M0004108
15.5	26	48-8M0004137	48-8M0004138
15.25	26	48-8M0004167	48-8M0004168
15	26	48-8M0004197	48-8M0004198
18	27	48-8M0003839	48-8M0003840
17.75	27	48-8M0003869	48-8M0003870
17.5	27	48-8M0003899	48-8M0003900
17.25	27	48-8M0003929	48-8M0003930
17	27	48-8M0003959	48-8M0003960
16.75	27	48-8M0003989	48-8M0003990
16.5	27	48-8M0004019	48-8M0004020
16.25	27	48-8M0004049	48-8M0004050

Diameter (Inches)	Pitch	Lab Finished LH Rotation	Lab Finished RH Rotation
16	27	48-8M0004079	48-8M0004080
15.75	27	48-8M0004109	48-8M0004110
15.5	27	48-8M0004139	48-8M0004140
15.25	27	48-8M0004169	48-8M0004170
15	27	48-8M0004199	48-8M0004200
18	28	48-8M0003841	48-8M0003842
17.75	28	48-8M0003871	48-8M0003872
17.5	28	48-8M0003901	48-8M0003902
17.25	28	48-8M0003931	48-8M0003932
17	28	48-8M0003961	48-8M0003962
16.75	28	48-8M0003991	48-8M0003992
16.5	28	48-8M0004021	48-8M0004022
16.25	28	48-8M0004051	48-8M0004052
16	28	48-8M0004081	48-8M0004082
15.75	28	48-8M0004111	48-8M0004112
15.5	28	48-8M0004141	48-8M0004142
15.25	28	48-8M0004171	48-8M0004172
15	28	48-8M0004201	48-8M0004202
18	29	48-8M0003843	48-8M0003844
17.75	29	48-8M0003873	48-8M0003874
17.5	29	48-8M0003903	48-8M0003904
17.25	29	48-8M0003933	48-8M0003934
17	29	48-8M0003963	48-8M0003964
16.75	29	48-8M0003993	48-8M0003994
16.5	29	48-8M0004023	48-8M0004024
16.25	29	48-8M0004053	48-8M0004054
16	29	48-8M0004083	48-8M0004084
15.75	29	48-8M0004113	48-8M0004114
15.5	29	48-8M0004143	48-8M0004144
15.25	29	48-8M0004173	48-8M0004174
15	29	48-8M0004203	48-8M0004204
18	30	48-8M0003845	48-8M0003846
17.75	30	48-8M0003875	48-8M0003876
17.5	30	48-8M0003905	48-8M0003906
17.25	30	48-8M0003935	48-8M0003936
17	30	48-8M0003965	48-8M0003966
16.75	30	48-8M0003995	48-8M0003996
16.5	30	48-8M0004025	48-8M0004026
16.25	30	48-8M0004055	48-8M0004056
16	30	48-8M0004085	48-8M0004086
15.75	30	48-8M0004115	48-8M0004116
15.5	30	48-8M0004145	48-8M0004146
15.25	30	48-8M0004175	48-8M0004176
15	30	48-8M0004205	48-8M0004206
18	31	48-8M0003847	48-8M0003848
17.75	31	48-8M0003877	48-8M0003878
17.5	31	48-8M0003907	48-8M0003908
17.25	31	48-8M0003937	48-8M0003938
17	31	48-8M0003967	48-8M0003968
16.75	31	48-8M0003997	48-8M0003998
16.5	31	48-8M0004027	48-8M0004028
16.25	31	48-8M0004057	48-8M0004058
16	31	48-8M0004087	48-8M0004088
15.75	31	48-8M0004117	48-8M0004118

Diameter (Inches)	Pitch	Lab Finished LH Rotation	Lab Finished RH Rotation
15.5	31	48-8M0004147	48-8M0004148
15.25	31	48-8M0004177	48-8M0004178
15	31	48-8M0004207	48-8M0004208
18	32	48-8M0003849	48-8M0003850
17.75	32	48-8M0003879	48-8M0003880
17.5	32	48-8M0003909	48-8M0003910
17.25	32	48-8M0003939	48-8M0003940
17	32	48-8M0003969	48-8M0003970
16.75	32	48-8M0003999	48-8M0004000
16.5	32	48-8M0004029	48-8M0004030
16.25	32	48-8M0004059	48-8M0004060
16	32	48-8M0004089	48-8M0004090
15.75	32	48-8M0004119	48-8M0004120
15.5	32	48-8M0004149	48-8M0004150
15.25	32	48-8M0004179	48-8M0004180
15	32	48-8M0004209	48-8M0004210
18	33	48-8M0003851	48-8M0003852
17.75	33	48-8M0003881	48-8M0003882
17.5	33	48-8M0003911	48-8M0003912
17.25	33	48-8M0003941	48-8M0003942
17	33	48-8M0003971	48-8M0003972
16.75	33	48-8M0004001	48-8M0004002
16.5	33	48-8M0004031	48-8M0004032
16.25	33	48-8M0004061	48-8M0004062
16	33	48-8M0004091	48-8M0004092
15.75	33	48-8M0004121	48-8M0004122
15.5	33	48-8M0004151	48-8M0004152
15.25	33	48-8M0004181	48-8M0004182
15	33	48-8M0004211	48-8M0004212
18	34	48-8M0003853	48-8M0003854
17.75	34	48-8M0003883	48-8M0003884
17.5	34	48-8M0003913	48-8M0003914
17.25	34	48-8M0003943	48-8M0003944
17	34	48-8M0003973	48-8M0003974
16.75	34	48-8M0004003	48-8M0004004
16.5	34	48-8M0004033	48-8M0004034
16.25	34	48-8M0004063	48-8M0004064
16	34	48-8M0004093	48-8M0004094
15.75	34	48-8M0004123	48-8M0004124
15.5	34	48-8M0004153	48-8M0004154
15.25	34	48-8M0004183	48-8M0004184
15	34	48-8M0004213	48-8M0004214
18	35	48-8M0003855	48-8M0003856
17.75	35	48-8M0003885	48-8M0003886
17.5	35	48-8M0003915	48-8M0003916
17.25	35	48-8M0003945	48-8M0003946
17	35	48-8M0003975	48-8M0003976
16.75	35	48-8M0004005	48-8M0004006
16.5	35	48-8M0004035	48-8M0004036
16.25	35	48-8M0004065	48-8M0004066
16	35	48-8M0004095	48-8M0004096
15.75	35	48-8M0004125	48-8M0004126
15.5	35	48-8M0004155	48-8M0004156
15.25	35	48-8M0004185	48-8M0004186

Diameter (Inches)	Pitch	Lab Finished LH Rotation	Lab Finished RH Rotation
15	35	48-8M0004215	48-8M0004216
18	36	48-8M0003857	48-8M0003858
17.75	36	48-8M0003887	48-8M0003888
17.5	36	48-8M0003917	48-8M0003918
17.25	36	48-8M0003947	48-8M0003948
17	36	48-8M0003977	48-8M0003978
16.75	36	48-8M0004007	48-8M0004008
16.5	36	48-8M0004037	48-8M0004038
16.25	36	48-8M0004067	48-8M0004068
16	36	48-8M0004097	48-8M0004098
15.75	36	48-8M0004127	48-8M0004128
15.5	36	48-8M0004157	48-8M0004158
15.25	36	48-8M0004187	48-8M0004188
15	36	48-8M0004217	48-8M0004218
18	37	48-8M0003859	48-8M0003860
17.75	37	48-8M0003889	48-8M0003890
17.5	37	48-8M0003919	48-8M0003920
17.25	37	48-8M0003949	48-8M0003950
17	37	48-8M0003979	48-8M0003980
16.75	37	48-8M0004009	48-8M0004010
16.5	37	48-8M0004039	48-8M0004040
16.25	37	48-8M0004069	48-8M0004070
16	37	48-8M0004099	48-8M0004100
15.75	37	48-8M0004129	48-8M0004130
15.5	37	48-8M0004159	48-8M0004160
15.25	37	48-8M0004189	48-8M0004190
15	37	48-8M0004219	48-8M0004220
18	38	48-8M0003861	48-8M0003862
17.75	38	48-8M0003891	48-8M0003892
17.5	38	48-8M0003921	48-8M0003922
17.25	38	48-8M0003951	48-8M0003952
17	38	48-8M0003981	48-8M0003982
16.75	38	48-8M0004011	48-8M0004012
16.5	38	48-8M0004041	48-8M0004042
16.25	38	48-8M0004071	48-8M0004072
16	38	48-8M0004101	48-8M0004102
15.75	38	48-8M0004131	48-8M0004132
15.5	38	48-8M0004161	48-8M0004162
15.25	38	48-8M0004191	48-8M0004192
15	38	48-8M0004221	48-8M0004222
18	39	48-8M0003863	48-8M0003864
17.75	39	48-8M0003893	48-8M0003894
17.5	39	48-8M0003923	48-8M0003924
17.25	39	48-8M0003953	48-8M0003954
17	39	48-8M0003983	48-8M0003984
16.75	39	48-8M0004013	48-8M0004014
16.5	39	48-8M0004043	48-8M0004044
16.25	39	48-8M0004073	48-8M0004074
16	39	48-8M0004103	48-8M0004104
15.75	39	48-8M0004133	48-8M0004134
15.5	39	48-8M0004163	48-8M0004164
15.25	39	48-8M0004193	48-8M0004194
15	39	48-8M0004223	48-8M0004224
18	40	48-8M0003865	48-8M0003866

Diameter (Inches)	Pitch	Lab Finished LH Rotation	Lab Finished RH Rotation
17.75	40	48-8M0003895	48-8M0003896
17.5	40	48-8M0003925	48-8M0003926
17.25	40	48-8M0003955	48-8M0003956
17	40	48-8M0003985	48-8M0003986
16.75	40	48-8M0004015	48-8M0004016
16.5	40	48-8M0004045	48-8M0004046
16.25	40	48-8M0004075	48-8M0004076
16	40	48-8M0004105	48-8M0004106
15.75	40	48-8M0004135	48-8M0004136
15.5	40	48-8M0004165	48-8M0004166
15.25	40	48-8M0004195	48-8M0004196
15	40	48-8M0004225	48-8M0004226

CNC Cleaver, 6 Blade, 15 Degree Rake - 600 HP

IIIA, IV, V, VI, VII SSM,NXT1
26 Spline hub with 1.75/1.88 in.(44.5/47.7mm) O.D. propeller shaft and 6 in. (152mm) hub length

Diameter (Inches)	Pitch	Lab Finished LH Rotation	Lab Finished RH Rotation
18	26	48-8M0005007	48-8M0005008
17.75	26	48-8M0005037	48-8M0005038
17.5	26	48-8M0005067	48-8M0005068
17.25	26	48-8M0005097	48-8M0005098
17	26	48-8M0005127	48-8M0005128
16.75	26	48-8M0005157	48-8M0005158
16.5	26	48-8M0005187	48-8M0005188
16.25	26	48-8M0005217	48-8M0005218
16	26	48-8M0005247	48-8M0005248
15.75	26	48-8M0005277	48-8M0005278
15.5	26	48-8M0005307	48-8M0005308
15.25	26	48-8M0005337	48-8M0005338
15	26	48-8M0005367	48-8M0005368
18	27	48-8M0005009	48-8M0005010
17.75	27	48-8M0005039	48-8M0005040
17.5	27	48-8M0005069	48-8M0005070
17.25	27	48-8M0005099	48-8M0005100
17	27	48-8M0005129	48-8M0005130
16.75	27	48-8M0005159	48-8M0005160
16.5	27	48-8M0005189	48-8M0005190
16.25	27	48-8M0005219	48-8M0005220
16	27	48-8M0005249	48-8M0005250
15.75	27	48-8M0005279	48-8M0005280
15.5	27	48-8M0005309	48-8M0005310
15.25	27	48-8M0005339	48-8M0005340
15	27	48-8M0005369	48-8M0005370
18	28	48-8M0005011	48-8M0005012
17.75	28	48-8M0005041	48-8M0005042
17.5	28	48-8M0005071	48-8M0005072
17.25	28	48-8M0005101	48-8M0005102
17	28	48-8M0005131	48-8M0005132
16.75	28	48-8M0005161	48-8M0005162
16.5	28	48-8M0005191	48-8M0005192
16.25	28	48-8M0005221	48-8M0005222
16	28	48-8M0005251	48-8M0005252
15.75	28	48-8M0005281	48-8M0005282
15.5	28	48-8M0005311	48-8M0005312
15.25	28	48-8M0005341	48-8M0005342
15	28	48-8M0005371	48-8M0005372
18	29	48-8M0005013	48-8M0005014
17.75	29	48-8M0005043	48-8M0005044
17.5	29	48-8M0005073	48-8M0005074
17.25	29	48-8M0005103	48-8M0005104
17	29	48-8M0005133	48-8M0005134
16.75	29	48-8M0005163	48-8M0005164
16.5	29	48-8M0005193	48-8M0005194
16.25	29	48-8M0005223	48-8M0005224
16	29	48-8M0005253	48-8M0005254
15.75	29	48-8M0005283	48-8M0005284
15.5	29	48-8M0005313	48-8M0005314
15.25	29	48-8M0005343	48-8M0005344
15	29	48-8M0005373	48-8M0005374
18	30	48-8M0005015	48-8M0005016
17.75	30	48-8M0005045	48-8M0005046
17.5	30	48-8M0005075	48-8M0005076
17.25	30	48-8M0005105	48-8M0005106
17	30	48-8M0005135	48-8M0005136
16.75	30	48-8M0005165	48-8M0005166
16.5	30	48-8M0005195	48-8M0005196
16.25	30	48-8M0005225	48-8M0005226
16	30	48-8M0005255	48-8M0005256
15.75	30	48-8M0005285	48-8M0005286
15.5	30	48-8M0005315	48-8M0005316
15.25	30	48-8M0005345	48-8M0005346
15	30	48-8M0005375	48-8M0005376
18	31	48-8M0005017	48-8M0005018
17.75	31	48-8M0005047	48-8M0005048
17.5	31	48-8M0005077	48-8M0005078
17.25	31	48-8M0005107	48-8M0005108
17	31	48-8M0005137	48-8M0005138
16.75	31	48-8M0005167	48-8M0005168
16.5	31	48-8M0005197	48-8M0005198
16.25	31	48-8M0005227	48-8M0005228
16	31	48-8M0005257	48-8M0005258
15.75	31	48-8M0005287	48-8M0005288
15.5	31	48-8M0005317	48-8M0005318
15.25	31	48-8M0005347	48-8M0005348
15	31	48-8M0005377	48-8M0005378
18	32	48-8M0005019	48-8M0005020
17.75	32	48-8M0005049	48-8M0005050
17.5	32	48-8M0005079	48-8M0005080
17.25	32	48-8M0005109	48-8M0005110
17	32	48-8M0005139	48-8M0005140
16.75	32	48-8M0005169	48-8M0005170
16.5	32	48-8M0005199	48-8M0005200
16.25	32	48-8M0005229	48-8M0005230
16	32	48-8M0005259	48-8M0005260
15.75	32	48-8M0005289	48-8M0005290
15.5	32	48-8M0005319	48-8M0005320

Diameter (Inches)	Pitch	Lab Finished LH Rotation	Lab Finished RH Rotation
15.25	32	48-8M0005349	48-8M0005350
15	32	48-8M0005379	48-8M0005380
18	33	48-8M0005021	48-8M0005022
17.75	33	48-8M0005051	48-8M0005052
17.5	33	48-8M0005081	48-8M0005082
17.25	33	48-8M0005111	48-8M0005112
17	33	48-8M0005141	48-8M0005142
16.75	33	48-8M0005171	48-8M0005172
16.5	33	48-8M0005201	48-8M0005202
16.25	33	48-8M0005231	48-8M0005232
16	33	48-8M0005261	48-8M0005262
15.75	33	48-8M0005291	48-8M0005292
15.5	33	48-8M0005321	48-8M0005322
15.25	33	48-8M0005351	48-8M0005352
15	33	48-8M0005381	48-8M0005382
18	34	48-8M0005023	48-8M0005024
17.75	34	48-8M0005053	48-8M0005054
17.5	34	48-8M0005083	48-8M0005084
17.25	34	48-8M0005113	48-8M0005114
17	34	48-8M0005143	48-8M0005144
16.75	34	48-8M0005173	48-8M0005174
16.5	34	48-8M0005203	48-8M0005204
16.25	34	48-8M0005233	48-8M0005234
16	34	48-8M0005263	48-8M0005264
15.75	34	48-8M0005293	48-8M0005294
15.5	34	48-8M0005323	48-8M0005324
15.25	34	48-8M0005353	48-8M0005354
15	34	48-8M0005383	48-8M0005384
18	35	48-8M0005025	48-8M0005026
17.75	35	48-8M0005055	48-8M0005056
17.5	35	48-8M0005085	48-8M0005086
17.25	35	48-8M0005115	48-8M0005116
17	35	48-8M0005145	48-8M0005146
16.75	35	48-8M0005175	48-8M0005176
16.5	35	48-8M0005205	48-8M0005206
16.25	35	48-8M0005235	48-8M0005236
16	35	48-8M0005265	48-8M0005266
15.75	35	48-8M0005295	48-8M0005296
15.5	35	48-8M0005325	48-8M0005326
15.25	35	48-8M0005355	48-8M0005356
15	35	48-8M0005385	48-8M0005386
18	36	48-8M0005027	48-8M0005028
17.75	36	48-8M0005057	48-8M0005058
17.5	36	48-8M0005087	48-8M0005088
17.25	36	48-8M0005117	48-8M0005118
17	36	48-8M0005147	48-8M0005148
16.75	36	48-8M0005177	48-8M0005178
16.5	36	48-8M0005207	48-8M0005208
16.25	36	48-8M0005237	48-8M0005238
16	36	48-8M0005267	48-8M0005268
15.75	36	48-8M0005297	48-8M0005298
15.5	36	48-8M0005327	48-8M0005328
15.25	36	48-8M0005357	48-8M0005358
15	36	48-8M0005387	48-8M0005388

Diameter (Inches)	Pitch	Lab Finished LH Rotation	Lab Finished RH Rotation
18	37	48-8M0005029	48-8M0005030
17.75	37	48-8M0005059	48-8M0005060
17.5	37	48-8M0005089	48-8M0005090
17.25	37	48-8M0005119	48-8M0005120
17	37	48-8M0005149	48-8M0005150
16.75	37	48-8M0005179	48-8M0005180
16.5	37	48-8M0005209	48-8M0005210
16.25	37	48-8M0005239	48-8M0005240
16	37	48-8M0005269	48-8M0005270
15.75	37	48-8M0005299	48-8M0005300
15.5	37	48-8M0005329	48-8M0005330
15.25	37	48-8M0005359	48-8M0005360
15	37	48-8M0005389	48-8M0005390
18	38	48-8M0005031	48-8M0005032
17.75	38	48-8M0005061	48-8M0005062
17.5	38	48-8M0005091	48-8M0005092
17.25	38	48-8M0005121	48-8M0005122
17	38	48-8M0005151	48-8M0005152
16.75	38	48-8M0005181	48-8M0005182
16.5	38	48-8M0005211	48-8M0005212
16.25	38	48-8M0005241	48-8M0005242
16	38	48-8M0005271	48-8M0005272
15.75	38	48-8M0005301	48-8M0005302
15.5	38	48-8M0005331	48-8M0005332
15.25	38	48-8M0005361	48-8M0005362
15	38	48-8M0005391	48-8M0005392
18	39	48-8M0005033	48-8M0005034
17.75	39	48-8M0005063	48-8M0005064
17.5	39	48-8M0005093	48-8M0005094
17.25	39	48-8M0005123	48-8M0005124
17	39	48-8M0005153	48-8M0005154
16.75	39	48-8M0005183	48-8M0005184
16.5	39	48-8M0005213	48-8M0005214
16.25	39	48-8M0005243	48-8M0005244
16	39	48-8M0005273	48-8M0005274
15.75	39	48-8M0005303	48-8M0005304
15.5	39	48-8M0005333	48-8M0005334
15.25	39	48-8M0005363	48-8M0005364
15	39	48-8M0005393	48-8M0005394
18	40	48-8M0005035	48-8M0005036
17.75	40	48-8M0005065	48-8M0005066
17.5	40	48-8M0005095	48-8M0005096
17.25	40	48-8M0005125	48-8M0005126
17	40	48-8M0005155	48-8M0005156
16.75	40	48-8M0005185	48-8M0005186
16.5	40	48-8M0005215	48-8M0005216
16.25	40	48-8M0005245	48-8M0005246
16	40	48-8M0005275	48-8M0005276
15.75	40	48-8M0005305	48-8M0005306
15.5	40	48-8M0005335	48-8M0005336
15.25	40	48-8M0005365	48-8M0005366
15	40	48-8M0005395	48-8M0005396

CNC CLEAVER 6 BLADE 18 DEGREE RAKE LAB FINISHED STERNDRIVE PROPELLER



CNC Cleaver, 6 Blade, 18 Degree Rake - 1200 HP

IIIA, IV, V, VI, VII SSM, NXT1, M8
26 Spline hub with 1.75/1.88 in.(44.5/47.7mm) O.D. propeller shaft and 6 in. (152mm) hub length

Diameter (Inches)	Pitch	Lab Finished LH Rotation	Lab Finished RH Rotation
18	30	48-8M0013897	48-8M0013898
17.75	30	48-8M0013927	48-8M0013928
17.5	30	48-8M0013957	48-8M0013958
17.25	30	48-8M0013987	48-8M0013988
17	30	48-8M0014017	48-8M0014018
16.75	30	48-8M0014047	48-8M0014048
16.5	30	48-8M0014077	48-8M0014078
16.25	30	48-8M0014107	48-8M0014108
16	30	48-8M0014137	48-8M0014138
15.75	30	48-8M0014167	48-8M0014168
15.5	30	48-8M0014197	48-8M0014198
15.25	30	48-8M0014227	48-8M0014228
15	30	48-8M0014257	48-8M0014258
18	31	48-8M0013899	48-8M0013900
17.75	31	48-8M0013929	48-8M0013930
17.5	31	48-8M0013959	48-8M0013960
17.25	31	48-8M0013989	48-8M0013990
17	31	48-8M0014019	48-8M0014020
16.75	31	48-8M0014049	48-8M0014050
16.5	31	48-8M0014079	48-8M0014080
16.25	31	48-8M0014109	48-8M0014110
16	31	48-8M0014139	48-8M0014140
15.75	31	48-8M0014169	48-8M0014170
15.5	31	48-8M0014199	48-8M0014200
15.25	31	48-8M0014229	48-8M0014230
15	31	48-8M0014259	48-8M0014260
18	32	48-8M0013901	48-8M0013902
17.75	32	48-8M0013931	48-8M0013932
17.5	32	48-8M0013961	48-8M0013962
17.25	32	48-8M0013991	48-8M0013992
17	32	48-8M0014021	48-8M0014022
16.75	32	48-8M0014051	48-8M0014052
16.5	32	48-8M0014081	48-8M0014082
16.25	32	48-8M0014111	48-8M0014112
16	32	48-8M0014141	48-8M0014142
15.75	32	48-8M0014171	48-8M0014172
15.5	32	48-8M0014201	48-8M0014202
15.25	32	48-8M0014231	48-8M0014232
15	32	48-8M0014261	48-8M0014262
18	33	48-8M0013903	48-8M0013904
17.75	33	48-8M0013933	48-8M0013934
17.5	33	48-8M0013963	48-8M0013964
17.25	33	48-8M0013993	48-8M0013994
17	33	48-8M0014023	48-8M0014024
16.75	33	48-8M0014053	48-8M0014054
16.5	33	48-8M0014083	48-8M0014084
16.25	33	48-8M0014113	48-8M0014114
16	33	48-8M0014143	48-8M0014144
15.75	33	48-8M0014173	48-8M0014174
15.5	33	48-8M0014203	48-8M0014204
15.25	33	48-8M0014233	48-8M0014234
15	33	48-8M0014263	48-8M0014264
18	34	48-8M0013905	48-8M0013906
17.75	34	48-8M0013935	48-8M0013936
17.5	34	48-8M0013965	48-8M0013966
17.25	34	48-8M0013995	48-8M0013996
17	34	48-8M0014025	48-8M0014026
16.75	34	48-8M0014055	48-8M0014056
16.5	34	48-8M0014085	48-8M0014086
16.25	34	48-8M0014115	48-8M0014116
16	34	48-8M0014145	48-8M0014146
15.75	34	48-8M0014175	48-8M0014176
15.5	34	48-8M0014205	48-8M0014206
15.25	34	48-8M0014235	48-8M0014236
15	34	48-8M0014265	48-8M0014266
18	35	48-8M0013907	48-8M0013908
17.75	35	48-8M0013937	48-8M0013938
17.5	35	48-8M0013967	48-8M0013968
17.25	35	48-8M0013997	48-8M0013998
17	35	48-8M0014027	48-8M0014028
16.75	35	48-8M0014057	48-8M0014058
16.5	35	48-8M0014087	48-8M0014088
16.25	35	48-8M0014117	48-8M0014118
16	35	48-8M0014147	48-8M0014148
15.75	35	48-8M0014177	48-8M0014178
15.5	35	48-8M0014207	48-8M0014208
15.25	35	48-8M0014237	48-8M0014238
15	35	48-8M0014267	48-8M0014268
18	36	48-8M0013909	48-8M0013910
17.75	36	48-8M0013939	48-8M0013940
17.5	36	48-8M0013969	48-8M0013970
17.25	36	48-8M0013999	48-8M0014000
17	36	48-8M0014029	48-8M0014030
16.75	36	48-8M0014059	48-8M0014060
16.5	36	48-8M0014089	48-8M0014090
16.25	36	48-8M0014119	48-8M0014120
16	36	48-8M0014149	48-8M0014150
15.75	36	48-8M0014179	48-8M0014180
15.5	36	48-8M0014209	48-8M0014210
15.25	36	48-8M0014239	48-8M0014240
15	36	48-8M0014269	48-8M0014270

Diameter (Inches)	Pitch	Lab Finished LH Rotation	Lab Finished RH Rotation
18	37	48-8M0013911	48-8M0013912
17.75	37	48-8M0013941	48-8M0013942
17.5	37	48-8M0013971	48-8M0013972
17.25	37	48-8M0014001	48-8M0014002
17	37	48-8M0014031	48-8M0014032
16.75	37	48-8M0014061	48-8M0014062
16.5	37	48-8M0014091	48-8M0014092
16.25	37	48-8M0014121	48-8M0014122
16	37	48-8M0014151	48-8M0014152
15.75	37	48-8M0014181	48-8M0014182
15.5	37	48-8M0014211	48-8M0014212
15.25	37	48-8M0014241	48-8M0014242
15	37	48-8M0014271	48-8M0014272
18	38	48-8M0013913	48-8M0013914
17.75	38	48-8M0013943	48-8M0013944
17.5	38	48-8M0013973	48-8M0013974
17.25	38	48-8M0014003	48-8M0014004
17	38	48-8M0014033	48-8M0014034
16.75	38	48-8M0014063	48-8M0014064
16.5	38	48-8M0014093	48-8M0014094
16.25	38	48-8M0014123	48-8M0014124
16	38	48-8M0014153	48-8M0014154
15.75	38	48-8M0014183	48-8M0014184
15.5	38	48-8M0014213	48-8M0014214
15.25	38	48-8M0014243	48-8M0014244
15	38	48-8M0014273	48-8M0014274
18	39	48-8M0013915	48-8M0013916
17.75	39	48-8M0013945	48-8M0013946
17.5	39	48-8M0013975	48-8M0013976
17.25	39	48-8M0014005	48-8M0014006
17	39	48-8M0014035	48-8M0014036
16.75	39	48-8M0014065	48-8M0014066
16.5	39	48-8M0014095	48-8M0014096
16.25	39	48-8M0014125	48-8M0014126
16	39	48-8M0014155	48-8M0014156
15.75	39	48-8M0014185	48-8M0014186
15.5	39	48-8M0014215	48-8M0014216
15.25	39	48-8M0014245	48-8M0014246
15	39	48-8M0014275	48-8M0014276
18	40	48-8M0013917	48-8M0013918
17.75	40	48-8M0013947	48-8M0013948
17.5	40	48-8M0013977	48-8M0013978
17.25	40	48-8M0014007	48-8M0014008
17	40	48-8M0014037	48-8M0014038
16.75	40	48-8M0014067	48-8M0014068
16.5	40	48-8M0014097	48-8M0014098
16.25	40	48-8M0014127	48-8M0014128
16	40	48-8M0014157	48-8M0014158
15.75	40	48-8M0014187	48-8M0014188
15.5	40	48-8M0014217	48-8M0014218
15.25	40	48-8M0014247	48-8M0014248
15	40	48-8M0014277	48-8M0014278

CNC Cleaver, 6 Blade, 18 Degree Rake - 900 HP

IIIA, IV, V, VI, VII SSM, NXT1
26 Spline hub with 1.75/1.88 in.(44.5/47.7mm) O.D. propeller shaft and 6 in. (152mm) hub length

Diameter (Inches)	Pitch	Lab Finished LH Rotation	Lab Finished RH Rotation
18	30	48-8M0015067	48-8M0015068
17.75	30	48-8M0015097	48-8M0015098
17.5	30	48-8M0015127	48-8M0015128
17.25	30	48-8M0015157	48-8M0015158
17	30	48-8M0015187	48-8M0015188
16.75	30	48-8M0015217	48-8M0015218
16.5	30	48-8M0015247	48-8M0015248
16.25	30	48-8M0015277	48-8M0015278
16	30	48-8M0015307	48-8M0015308
15.75	30	48-8M0015337	48-8M0015338
15.5	30	48-8M0015367	48-8M0015368
15.25	30	48-8M0015397	48-8M0015398
15	30	48-8M0015427	48-8M0015428
18	31	48-8M0015069	48-8M0015070
17.75	31	48-8M0015099	48-8M0015100
17.5	31	48-8M0015129	48-8M0015130
17.25	31	48-8M0015159	48-8M0015160
17	31	48-8M0015189	48-8M0015190
16.75	31	48-8M0015219	48-8M0015220
16.5	31	48-8M0015249	48-8M0015250
16.25	31	48-8M0015279	48-8M0015280
16	31	48-8M0015309	48-8M0015310
15.75	31	48-8M0015339	48-8M0015340
15.5	31	48-8M0015369	48-8M0015370
15.25	31	48-8M0015399	48-8M0015400
15	31	48-8M0015429	48-8M0015430
18	32	48-8M0015071	48-8M0015072
17.75	32	48-8M0015101	48-8M0015102
17.5	32	48-8M0015131	48-8M0015132
17.25	32	48-8M0015161	48-8M0015162
17	32	48-8M0015191	48-8M0015192
16.75	32	48-8M0015221	48-8M0015222
16.5	32	48-8M0015251	48-8M0015252
16.25	32	48-8M0015281	48-8M0015282
16	32	48-8M0015311	48-8M0015312
15.75	32	48-8M0015341	48-8M0015342
15.5	32	48-8M0015371	48-8M0015372
15.25	32	48-8M0015401	48-8M0015402
15	32	48-8M0015431	48-8M0015432
18	33	48-8M0015073	48-8M0015074
17.75	33	48-8M0015103	48-8M0015104
17.5	33	48-8M0015133	48-8M0015134
17.25	33	48-8M0015163	48-8M0015164
17	33	48-8M0015193	48-8M0015194
16.75	33	48-8M0015223	48-8M0015224
16.5	33	48-8M0015253	48-8M0015254
16.25	33	48-8M0015283	48-8M0015284
16	33	48-8M0015313	48-8M0015314
15.75	33	48-8M0015343	48-8M0015344

Diameter (Inches)	Pitch	Lab Finished LH Rotation	Lab Finished RH Rotation
15.5	33	48-8M0015373	48-8M0015374
15.25	33	48-8M0015403	48-8M0015404
15	33	48-8M0015433	48-8M0015434
18	34	48-8M0015075	48-8M0015076
17.75	34	48-8M0015105	48-8M0015106
17.5	34	48-8M0015135	48-8M0015136
17.25	34	48-8M0015165	48-8M0015166
17	34	48-8M0015195	48-8M0015196
16.75	34	48-8M0015225	48-8M0015226
16.5	34	48-8M0015255	48-8M0015256
16.25	34	48-8M0015285	48-8M0015286
16	34	48-8M0015315	48-8M0015316
15.75	34	48-8M0015345	48-8M0015346
15.5	34	48-8M0015375	48-8M0015376
15.25	34	48-8M0015405	48-8M0015406
15	34	48-8M0015435	48-8M0015436
18	35	48-8M0015077	48-8M0015078
17.75	35	48-8M0015107	48-8M0015108
17.5	35	48-8M0015137	48-8M0015138
17.25	35	48-8M0015167	48-8M0015168
17	35	48-8M0015197	48-8M0015198
16.75	35	48-8M0015227	48-8M0015228
16.5	35	48-8M0015257	48-8M0015258
16.25	35	48-8M0015287	48-8M0015288
16	35	48-8M0015317	48-8M0015318
15.75	35	48-8M0015347	48-8M0015348
15.5	35	48-8M0015377	48-8M0015378
15.25	35	48-8M0015407	48-8M0015408
15	35	48-8M0015437	48-8M0015438
18	36	48-8M0015079	48-8M0015080
17.75	36	48-8M0015109	48-8M0015110
17.5	36	48-8M0015139	48-8M0015140
17.25	36	48-8M0015169	48-8M0015170
17	36	48-8M0015199	48-8M0015200
16.75	36	48-8M0015229	48-8M0015230
16.5	36	48-8M0015259	48-8M0015260
16.25	36	48-8M0015289	48-8M0015290
16	36	48-8M0015319	48-8M0015320
15.75	36	48-8M0015349	48-8M0015350
15.5	36	48-8M0015379	48-8M0015380
15.25	36	48-8M0015409	48-8M0015410
15	36	48-8M0015439	48-8M0015440
18	37	48-8M0015081	48-8M0015082
17.75	37	48-8M0015111	48-8M0015112
17.5	37	48-8M0015141	48-8M0015142
17.25	37	48-8M0015171	48-8M0015172
17	37	48-8M0015201	48-8M0015202
16.75	37	48-8M0015231	48-8M0015232
16.5	37	48-8M0015261	48-8M0015262
16.25	37	48-8M0015291	48-8M0015292
16	37	48-8M0015321	48-8M0015322
15.75	37	48-8M0015351	48-8M0015352
15.5	37	48-8M0015381	48-8M0015382
15.25	37	48-8M0015411	48-8M0015412

Diameter (Inches)	Pitch	Lab Finished LH Rotation	Lab Finished RH Rotation
15	37	48-8M0015441	48-8M0015442
18	38	48-8M0015083	48-8M0015084
17.75	38	48-8M0015113	48-8M0015114
17.5	38	48-8M0015143	48-8M0015144
17.25	38	48-8M0015173	48-8M0015174
17	38	48-8M0015203	48-8M0015204
16.75	38	48-8M0015233	48-8M0015234
16.5	38	48-8M0015263	48-8M0015264
16.25	38	48-8M0015293	48-8M0015294
16	38	48-8M0015323	48-8M0015324
15.75	38	48-8M0015353	48-8M0015354
15.5	38	48-8M0015383	48-8M0015384
15.25	38	48-8M0015413	48-8M0015414
15	38	48-8M0015443	48-8M0015444
18	39	48-8M0015085	48-8M0015086
17.75	39	48-8M0015115	48-8M0015116
17.5	39	48-8M0015145	48-8M0015146
17.25	39	48-8M0015175	48-8M0015176
17	39	48-8M0015205	48-8M0015206
16.75	39	48-8M0015235	48-8M0015236
16.5	39	48-8M0015265	48-8M0015266
16.25	39	48-8M0015295	48-8M0015296
16	39	48-8M0015325	48-8M0015326
15.75	39	48-8M0015355	48-8M0015356
15.5	39	48-8M0015385	48-8M0015386
15.25	39	48-8M0015415	48-8M0015416
15	39	48-8M0015445	48-8M0015446
18	40	48-8M0015087	48-8M0015088
17.75	40	48-8M0015117	48-8M0015118
17.5	40	48-8M0015147	48-8M0015148
17.25	40	48-8M0015177	48-8M0015178
17	40	48-8M0015207	48-8M0015208
16.75	40	48-8M0015237	48-8M0015238
16.5	40	48-8M0015267	48-8M0015268
16.25	40	48-8M0015297	48-8M0015298
16	40	48-8M0015327	48-8M0015328
15.75	40	48-8M0015357	48-8M0015358
15.5	40	48-8M0015387	48-8M0015388
15.25	40	48-8M0015417	48-8M0015418
15	40	48-8M0015447	48-8M0015448

CNC CLEAVER 6 BLADE 21 DEGREE RAKE LAB FINISHED STERNDRIVE PROPELLER



CNC Cleaver, 6 Blade, 21 Degree Rake - 1200 HP

IIIA, IV, V, VI, VII SSM, NTX1, M8
26 Spline hub with 1.75/1.88 in.(44.5/47.7mm) O.D. propeller shaft and 6 in. (152mm) hub length

Diameter (Inches)	Pitch	Lab Finished LH Rotation	Lab Finished RH Rotation
18	30	48-8M0017479	48-8M0017480
17.75	30	48-8M0017509	48-8M0017510
17.5	30	48-8M0017539	48-8M0017540
17.25	30	48-8M0017569	48-8M0017570
17	30	48-8M0017599	48-8M0017600
16.75	30	48-8M0017629	48-8M0017630
16.5	30	48-8M0017659	48-8M0017660
16.25	30	48-8M0017689	48-8M0017690
16	30	48-8M0017719	48-8M0017720
15.75	30	48-8M0017749	48-8M0017750
15.5	30	48-8M0017779	48-8M0017780
15.25	30	48-8M0017809	48-8M0017810
15	30	48-8M0017839	48-8M0017840
18	31	48-8M0017481	48-8M0017482
17.75	31	48-8M0017511	48-8M0017512
17.5	31	48-8M0017541	48-8M0017542
17.25	31	48-8M0017571	48-8M0017572
17	31	48-8M0017601	48-8M0017602
16.75	31	48-8M0017631	48-8M0017632
16.5	31	48-8M0017661	48-8M0017662
16.25	31	48-8M0017691	48-8M0017692
16	31	48-8M0017721	48-8M0017722
15.75	31	48-8M0017751	48-8M0017752
15.5	31	48-8M0017781	48-8M0017782
15.25	31	48-8M0017811	48-8M0017812
15	31	48-8M0017841	48-8M0017842
18	32	48-8M0017483	48-8M0017484
17.75	32	48-8M0017513	48-8M0017514
17.5	32	48-8M0017543	48-8M0017544
17.25	32	48-8M0017573	48-8M0017574
17	32	48-8M0017603	48-8M0017604
16.75	32	48-8M0017633	48-8M0017634
16.5	32	48-8M0017663	48-8M0017664
16.25	32	48-8M0017693	48-8M0017694
16	32	48-8M0017723	48-8M0017724
15.75	32	48-8M0017753	48-8M0017754
15.5	32	48-8M0017783	48-8M0017784
15.25	32	48-8M0017813	48-8M0017814
15	32	48-8M0017843	48-8M0017844
18	33	48-8M0017485	48-8M0017486
17.75	33	48-8M0017515	48-8M0017516
17.5	33	48-8M0017545	48-8M0017546
17.25	33	48-8M0017575	48-8M0017576
17	33	48-8M0017605	48-8M0017606
16.75	33	48-8M0017635	48-8M0017636
16.5	33	48-8M0017665	48-8M0017666
16.25	33	48-8M0017695	48-8M0017696
16	33	48-8M0017725	48-8M0017726
15.75	33	48-8M0017755	48-8M0017756
15.5	33	48-8M0017785	48-8M0017786
15.25	33	48-8M0017815	48-8M0017816
15	33	48-8M0017845	48-8M0017846
18	34	48-8M0017487	48-8M0017488
17.75	34	48-8M0017517	48-8M0017518
17.5	34	48-8M0017547	48-8M0017548
17.25	34	48-8M0017577	48-8M0017578
17	34	48-8M0017607	48-8M0017608
16.75	34	48-8M0017637	48-8M0017638
16.5	34	48-8M0017667	48-8M0017668
16.25	34	48-8M0017697	48-8M0017698
16	34	48-8M0017727	48-8M0017728
15.75	34	48-8M0017757	48-8M0017758
15.5	34	48-8M0017787	48-8M0017788
15.25	34	48-8M0017817	48-8M0017818
15	34	48-8M0017847	48-8M0017848
18	35	48-8M0017489	48-8M0017490
17.75	35	48-8M0017519	48-8M0017520
17.5	35	48-8M0017549	48-8M0017550
17.25	35	48-8M0017579	48-8M0017580
17	35	48-8M0017609	48-8M0017610
16.75	35	48-8M0017639	48-8M0017640
16.5	35	48-8M0017669	48-8M0017670
16.25	35	48-8M0017699	48-8M0017700
16	35	48-8M0017729	48-8M0017730
15.75	35	48-8M0017759	48-8M0017760
15.5	35	48-8M0017789	48-8M0017790
15.25	35	48-8M0017819	48-8M0017820
15	35	48-8M0017849	48-8M0017850
18	36	48-8M0017491	48-8M0017492
17.75	36	48-8M0017521	48-8M0017522
17.5	36	48-8M0017551	48-8M0017552
17.25	36	48-8M0017581	48-8M0017582
17	36	48-8M0017611	48-8M0017612
16.75	36	48-8M0017641	48-8M0017642
16.5	36	48-8M0017671	48-8M0017672
16.25	36	48-8M0017701	48-8M0017702
16	36	48-8M0017731	48-8M0017732
15.75	36	48-8M0017761	48-8M0017762
15.5	36	48-8M0017791	48-8M0017792
15.25	36	48-8M0017821	48-8M0017822
15	36	48-8M0017851	48-8M0017852
18	37	48-8M0017493	48-8M0017494
17.75	37	48-8M0017523	48-8M0017524
17.5	37	48-8M0017553	48-8M0017554
17.25	37	48-8M0017583	48-8M0017584
17	37	48-8M0017613	48-8M0017614
16.75	37	48-8M0017643	48-8M0017644
16.5	37	48-8M0017673	48-8M0017674
16.25	37	48-8M0017703	48-8M0017704
16	37	48-8M0017733	48-8M0017734
15.75	37	48-8M0017763	48-8M0017764
15.5	37	48-8M0017793	48-8M0017794
15.25	37	48-8M0017823	48-8M0017824

Diameter (Inches)	Pitch	Lab Finished LH Rotation	Lab Finished RH Rotation
15	37	48-8M0017853	48-8M0017854
18	38	48-8M0017495	48-8M0017496
17.75	38	48-8M0017525	48-8M0017526
17.5	38	48-8M0017555	48-8M0017556
17.25	38	48-8M0017585	48-8M0017586
17	38	48-8M0017615	48-8M0017616
16.75	38	48-8M0017645	48-8M0017646
16.5	38	48-8M0017675	48-8M0017676
16.25	38	48-8M0017705	48-8M0017706
16	38	48-8M0017735	48-8M0017736
15.75	38	48-8M0017765	48-8M0017766
15.5	38	48-8M0017795	48-8M0017796
15.25	38	48-8M0017825	48-8M0017826
15	38	48-8M0017855	48-8M0017856
18	39	48-8M0017497	48-8M0017498
17.75	39	48-8M0017527	48-8M0017528
17.5	39	48-8M0017557	48-8M0017558
17.25	39	48-8M0017587	48-8M0017588
17	39	48-8M0017617	48-8M0017618
16.75	39	48-8M0017647	48-8M0017648
16.5	39	48-8M0017677	48-8M0017678
16.25	39	48-8M0017707	48-8M0017708
16	39	48-8M0017737	48-8M0017738
15.75	39	48-8M0017767	48-8M0017768
15.5	39	48-8M0017797	48-8M0017798
15.25	39	48-8M0017827	48-8M0017828
15	39	48-8M0017857	48-8M0017858
18	40	48-8M0017499	48-8M0017500
17.75	40	48-8M0017529	48-8M0017530
17.5	40	48-8M0017559	48-8M0017560
17.25	40	48-8M0017589	48-8M0017590
17	40	48-8M0017619	48-8M0017620
16.75	40	48-8M0017649	48-8M0017650
16.5	40	48-8M0017679	48-8M0017680
16.25	40	48-8M0017709	48-8M0017710
16	40	48-8M0017739	48-8M0017740
15.75	40	48-8M0017769	48-8M0017770
15.5	40	48-8M0017799	48-8M0017800
15.25	40	48-8M0017829	48-8M0017830
15	40	48-8M0017859	48-8M0017860

CNC Cleaver, 6 Blade, 21 Degree Rake - 900 HP

IIIA, IV, V, VI, VII SSM, NXT1
26 Spline hub with 1.75/1.88 in.(44.5/47.7mm) O.D. propeller shaft and 6 in. (152mm) hub length

Diameter (Inches)	Pitch	Lab Finished LH Rotation	Lab Finished RH Rotation
18	30	48-8M0018649	48-8M0018650
17.75	30	48-8M0018679	48-8M0018680
17.5	30	48-8M0018709	48-8M0018710
17.25	30	48-8M0018739	48-8M0018740
17	30	48-8M0018769	48-8M0018770
16.75	30	48-8M0018799	48-8M0018800
16.5	30	48-8M0018829	48-8M0018830
16.25	30	48-8M0018859	48-8M0018860
16	30	48-8M0018889	48-8M0018890
15.75	30	48-8M0018919	48-8M0018920
15.5	30	48-8M0018949	48-8M0018950
15.25	30	48-8M0018979	48-8M0018980
15	30	48-8M0019009	48-8M0019010
18	31	48-8M0018651	48-8M0018652
17.75	31	48-8M0018681	48-8M0018682
17.5	31	48-8M0018711	48-8M0018712
17.25	31	48-8M0018741	48-8M0018742
17	31	48-8M0018771	48-8M0018772
16.75	31	48-8M0018801	48-8M0018802
16.5	31	48-8M0018831	48-8M0018832
16.25	31	48-8M0018861	48-8M0018862
16	31	48-8M0018891	48-8M0018892
15.75	31	48-8M0018921	48-8M0018922
15.5	31	48-8M0018951	48-8M0018952
15.25	31	48-8M0018981	48-8M0018982
15	31	48-8M0019011	48-8M0019012
18	32	48-8M0018653	48-8M0018654
17.75	32	48-8M0018683	48-8M0018684
17.5	32	48-8M0018713	48-8M0018714
17.25	32	48-8M0018743	48-8M0018744
17	32	48-8M0018773	48-8M0018774
16.75	32	48-8M0018803	48-8M0018804
16.5	32	48-8M0018833	48-8M0018834
16.25	32	48-8M0018863	48-8M0018864
16	32	48-8M0018893	48-8M0018894
15.75	32	48-8M0018923	48-8M0018924
15.5	32	48-8M0018953	48-8M0018954
15.25	32	48-8M0018983	48-8M0018984
15	32	48-8M0019013	48-8M0019014
18	33	48-8M0018655	48-8M0018656
17.75	33	48-8M0018685	48-8M0018686
17.5	33	48-8M0018715	48-8M0018716
17.25	33	48-8M0018745	48-8M0018746
17	33	48-8M0018775	48-8M0018776
16.75	33	48-8M0018805	48-8M0018806
16.5	33	48-8M0018835	48-8M0018836
16.25	33	48-8M0018865	48-8M0018866
16	33	48-8M0018895	48-8M0018896
15.75	33	48-8M0018925	48-8M0018926
15.5	33	48-8M0018955	48-8M0018956
15.25	33	48-8M0018985	48-8M0018986
15	33	48-8M0019015	48-8M0019016
18	34	48-8M0018657	48-8M0018658
17.75	34	48-8M0018687	48-8M0018688
17.5	34	48-8M0018717	48-8M0018718
17.25	34	48-8M0018747	48-8M0018748
17	34	48-8M0018777	48-8M0018778
16.75	34	48-8M0018807	48-8M0018808
16.5	34	48-8M0018837	48-8M0018838
16.25	34	48-8M0018867	48-8M0018868
16	34	48-8M0018897	48-8M0018898

Diameter (Inches)	Pitch	Lab Finished LH Rotation	Lab Finished RH Rotation
15.75	34	48-8M0018927	48-8M0018928
15.5	34	48-8M0018957	48-8M0018958
15.25	34	48-8M0018987	48-8M0018988
15	34	48-8M0019017	48-8M0019018
18	35	48-8M0018659	48-8M0018660
17.75	35	48-8M0018689	48-8M0018690
17.5	35	48-8M0018719	48-8M0018720
17.25	35	48-8M0018749	48-8M0018750
17	35	48-8M0018779	48-8M0018780
16.75	35	48-8M0018809	48-8M0018810
16.5	35	48-8M0018839	48-8M0018840
16.25	35	48-8M0018869	48-8M0018870
16	35	48-8M0018899	48-8M0018900
15.75	35	48-8M0018929	48-8M0018930
15.5	35	48-8M0018959	48-8M0018960
15.25	35	48-8M0018989	48-8M0018990
15	35	48-8M0019019	48-8M0019020
18	36	48-8M0018661	48-8M0018662
17.75	36	48-8M0018691	48-8M0018692
17.5	36	48-8M0018721	48-8M0018722
17.25	36	48-8M0018751	48-8M0018752
17	36	48-8M0018781	48-8M0018782
16.75	36	48-8M0018811	48-8M0018812
16.5	36	48-8M0018841	48-8M0018842
16.25	36	48-8M0018871	48-8M0018872
16	36	48-8M0018901	48-8M0018902
15.75	36	48-8M0018931	48-8M0018932
15.5	36	48-8M0018961	48-8M0018962
15.25	36	48-8M0018991	48-8M0018992
15	36	48-8M0019021	48-8M0019022
18	37	48-8M0018663	48-8M0018664
17.75	37	48-8M0018693	48-8M0018694
17.5	37	48-8M0018723	48-8M0018724
17.25	37	48-8M0018753	48-8M0018754
17	37	48-8M0018783	48-8M0018784
16.75	37	48-8M0018813	48-8M0018814
16.5	37	48-8M0018843	48-8M0018844
16.25	37	48-8M0018873	48-8M0018874
16	37	48-8M0018903	48-8M0018904
15.75	37	48-8M0018933	48-8M0018934
15.5	37	48-8M0018963	48-8M0018964
15.25	37	48-8M0018993	48-8M0018994
15	37	48-8M0019023	48-8M0019024
18	38	48-8M0018665	48-8M0018666
17.75	38	48-8M0018695	48-8M0018696
17.5	38	48-8M0018725	48-8M0018726
17.25	38	48-8M0018755	48-8M0018756
17	38	48-8M0018785	48-8M0018786
16.75	38	48-8M0018815	48-8M0018816
16.5	38	48-8M0018845	48-8M0018846
16.25	38	48-8M0018875	48-8M0018876
16	38	48-8M0018905	48-8M0018906
15.75	38	48-8M0018935	48-8M0018936
15.5	38	48-8M0018965	48-8M0018966

Diameter (Inches)	Pitch	Lab Finished LH Rotation	Lab Finished RH Rotation
15.25	38	48-8M0018995	48-8M0018996
15	38	48-8M0019025	48-8M0019026
18	39	48-8M0018667	48-8M0018668
17.75	39	48-8M0018697	48-8M0018698
17.5	39	48-8M0018727	48-8M0018728
17.25	39	48-8M0018757	48-8M0018758
17	39	48-8M0018787	48-8M0018788
16.75	39	48-8M0018817	48-8M0018818
16.5	39	48-8M0018847	48-8M0018848
16.25	39	48-8M0018877	48-8M0018878
16	39	48-8M0018907	48-8M0018908
15.75	39	48-8M0018937	48-8M0018938
15.5	39	48-8M0018967	48-8M0018968
15.25	39	48-8M0018997	48-8M0018998
15	39	48-8M0019027	48-8M0019028
18	40	48-8M0018669	48-8M0018670
17.75	40	48-8M0018699	48-8M0018700
17.5	40	48-8M0018729	48-8M0018730
17.25	40	48-8M0018759	48-8M0018760
17	40	48-8M0018789	48-8M0018790
16.75	40	48-8M0018819	48-8M0018820
16.5	40	48-8M0018849	48-8M0018850
16.25	40	48-8M0018879	48-8M0018880
16	40	48-8M0018909	48-8M0018910
15.75	40	48-8M0018939	48-8M0018940
15.5	40	48-8M0018969	48-8M0018970
15.25	40	48-8M0018999	48-8M0019000
15	40	48-8M0019029	48-8M0019030

QUICKSILVER PROPELLER APPLICATION CHARTS

EVINRUDE/JOHNSON OUTBOARD APPLICATION CHARTS

9.5-14 Horsepower - Evinrude/Johnson

9.5 HP 1964-73
10 HP 1958-63
10-14 HP Commercial 1982-94
Pin Drive

Length (ft/m)	Current MPH/KPH	Propeller Size	Matl	Blades	Style	Quicksilver P/N	OEM P/N	Hub System
All Purpose		8 1/4 X 8 RH	AL	3	Black Diamond	QA3178R	387334	Rubber Bushing

8-15 Horsepower - Evinrude/Johnson

9.9 - 15 HP 2-Strokes 1974-2000
8 - 9.9 - 15 HP 4-Strokes 2000-2001
13 Tooth Spline

Length (ft/m)	Current MPH/KPH	Propeller Size	Matl	Blades	Style	Quicksilver P/N	OEM P/N	Hub System
All Purpose		9.25 X 10 RH	AL	3	Black Diamond	QA3168R	174950	Rubber Bushing
All Purpose		9.25 X 11 RH	AL	3	Black Diamond	QA3170R	174817	Rubber Bushing

15-25 Horsepower - Evinrude/Johnson

15 HP 1953-56
18 HP 1957-73
20 HP 1969-73
25 HP 1969-77
Pin Drive

Length (ft/m)	Current MPH/KPH	Propeller Size	Matl	Blades	Style	Quicksilver P/N	OEM P/N	Hub System
12-16 / 3.6-4.8	20-28 / 32-45	9 X 10 RH	AL	3	Black Diamond	QA3150R	383629	Rubber Bushing
12-14 / 3.6-4.2	25-32 / 40-51	9 1/4 X 11 RH	AL	3	Black Diamond	QA3152R	388088	Rubber Bushing

25-30 Horsepower - Evinrude/Johnson (4 Stroke)

25 HP 4-Stroke 2004-2007
30 HP 4- Stroke 2004-2007
10 Tooth Spline

Length (ft/m)	Current MPH/KPH	Propeller Size	Matl	Blades	Style	Quicksilver P/N	OEM P/N	Hub System
20+ / 6.1+	to 16 / to 26	10 1/4 X 9 RH	AL	3	Black Diamond	QA2242R	58100-96370-019	Rubber Bushing
17-20 / 5.2-6.1	10-20 / 16-32	10 1/4 X 11 RH	AL	3	Black Diamond	QA2248R	58100-96420-019	Rubber Bushing

20-35 Horsepower - Evinrude/Johnson

20 HP 1984-97
25 HP 2 & 3 Cyl. 1984 & Newer (including ETEC)
25 HP Commercial 1993 & Newer
35 HP 2 & 3 Cyl. 1976 & Newer
30 HP 2 Cyl. 1984 & Newer (including ETEC)
14 Tooth Spline

Length (ft/m)	Current MPH/KPH	Propeller Size	Matl	Blades	Style	Quicksilver P/N	OEM P/N	Hub System
17-20 / 5.2-6.1	10-20 / 16-32	10 1/2 X 11 RH	AL	3	Black Diamond	QA3114R	175190	Rubber Bushing
13-15 / 3.9-4.5	26-34 / 42-54	10 X 13 RH	AL	3	Black Diamond	QA3118R	175191	Rubber Bushing
13-15 / 3.9-4.5	32-40 / 51-64	10 X 15 RH	AL	3	Black Diamond	QA3122R	390380	Rubber Bushing

QUICKSILVER PROPELLER APPLICATION CHARTS

40-50 Horsepower - Johnson 4-Stroke

40 HP 4-Stroke 2000-2007
50 HP 4-Stroke 2000-2007
13 Tooth Spline

Length (ft/m)	Current MPH/KPH	Propeller Size	Matl	Blades	Style	Quicksilver P/N	OEM P/N	Hub System
16-23 / 4.8-6.9	11-20 / 17-32	11 1/2 X 11 RH	AL	3	Black Diamond	QA2226R	5031623	Rubber Bushing
14-19 / 4.2-5.8	16-26 / 26-42	11 1/2 X 13 RH	AL	3	Black Diamond	QA2078X	5031619	Rubber Bushing
13-17 / 3.9-5.2	20-29 / 32-46	11 1/2 X 14 RH	AL	3	Black Diamond		5031620	Rubber Bushing
12-16 / 3.6-4.8	23-32 / 37-51	11 1/2 X 15 RH	AL	3	Black Diamond	QA2234R	5031627	Rubber Bushing
10-14 / 3.0-4.2	29-38 / 46-61	11 1/2 X 17 RH	AL	3	Black Diamond			Rubber Bushing

45-75 Hp Large Gearcase - Evinrude/Johnson

40 HP ETEC 2004 & Newer
45 HP 2 Cyl Commercial 1986 & Newer
50 HP ETEC 2004 & Newer
50 HP 2 Cyl. 1971-74
50 HP 2 Cyl Commercial 1977-79
50 HP 3 Cyl. 1994-99
55 HP 3 Cyl. 1968-69
55 HP 2 Cyl. Commercial 1980 & Newer
60 HP ETEC 2004 & Newer 60 HP 3 Cyl. 1970-71, 1986 & Newer
65 HP 3 Cyl. 1972-73
65 HP 3 Cyl. Commercial 1984 & Newer
70 HP 3 & 4 Cyl. 1974 & Newer (including 4-stroke)
75 HP 3 Cyl. 1975-84
75 HP ETEC 2004 & Newer
13 Tooth Spline

Length (ft/m)	Current MPH/KPH	Propeller Size	Matl	Blades	Style	Quicksilver P/N	OEM P/N	Hub System
19-22 / 5.8-6.7	17-26 / 27-42	14 X 13 RH Extra Cup	AL	3	Black Diamond	QA3832X	391668	(1)
17-19 / 5.2-5.8	23-31 / 37-50	13 3/4 X 15 RH	AL	3	Black Diamond	QA2208X	391198	(1)
16-19 / 4.8-5.8	29-36 / 47-58	13 1/4 X 17 RH	AL	3	Black Diamond	QA2206X	391199	(1)
16-19 / 4.8-5.8	29-36 / 47-58	13 1/8 X 16 RH	SS	3	Silverado	QS5136X	389949	(1)
15-18 / 4.5-5.5	34-42 / 55-68	13 X 18 RH	SS	3	Silverado	QS5138X	389948	(1)

(1) Use Flo-Torq II attaching hardware kit 835266Q1. Purchase Separately.

85 HP-140 HP V-4 Outboard - Evinrude/Johnson

85 HP V-4 1969-80
85 HP V-4 1991-95
88 HP V-4 1981-96
90 HP V-4 1981 & Newer
90 HP ETEC 2004 & Newer
100 HP V-4 1979-80
100 HP V-4 1988-93
110 HP V-4 1986-89
112 HP V-4 1994-96
115 HP V-4 1973 & Newer
115 HP V-4 ETEC 2004 & Newer
120 HP V-4 1986-94
125 HP V-4 1971-72
130 HP V-4 ETEC 2004 & Newer
135 HP V-4 1973-76
140 HP V-4 1977-84
13 Tooth Spline

Length (ft/m)	Current MPH/KPH	Propeller Size	Matl	Blades	Style	Quicksilver P/N	OEM P/N	Hub System
22-29 / 6.6-8.8	14-28 / 23-45	14 X 13 RH extra cup	AL	3	Black Diamond	QA3832X	391668	(1)
21-26 / 6.4-7.8	24-36 / 39-58	13 3/4 X 15 RH	AL	3	Black Diamond	QA2208X	391198	(1)
18-21 / 5.5-6.4	30-42 / 48-68	13 1/4 X 17 RH	AL	3	Black Diamond	QA2206X	391199	(1)
18-21 / 5.5-6.4	30-42 / 48-68	13 1/8 X 16 RH	SS	3	Silverado	QS5136X	389949	(1)
17-20 / 5.2-6.1	38-50 / 61-81	13 X 18 RH	SS	3	Silverado	QS5138X	389948	(1)

(1) Use Flo-Torq II attaching hardware kit 835266Q1. Purchase separately.

100 HP-300 HP V-6/V-8 Outboard - Evinrude/Johnson

100 HP V-4 Commercial 1984 & Newer, 115 HP V-4 95 & Newer
120 HP V-4 1985, 130 HP V-4 1995 & Newer
140 HP V-4 (25") 1989-94, 140 HP V-4 1985
150 HP V-6 Commercial 1993 & Newer
150 HP V-6 1978 & Newer (including ETEC)
155 HP V-6 Commercial 1978 & Newer
175 HP V-6 1977 & Newer (including ETEC)
185 HP V-6 1984-85, 200 HP V-6 1976 & Newer
200 HP V-6 ETEC
225 HP V-6 1986 & Newer, 250 HP V-8 1991 & Newer (including ETEC)
250 HP V-6 ETEC
250 HP HO V-6 ETEC
275-300 HP V-8 Two Strokes 1986-95
300 HP V-6 ETEC
200-300 HP E-TEC G2
15 Tooth Spline

Length (ft/m)	Current MPH/KPH	Propeller Size	Matl	Blades	Style	Quicksilver P/N	OEM P/N	Hub System
Pontoon	to 26 / to 42	14 x 12 RH	AL	4	Nemesis	48-8M0055531		(1)
Pontoon	to 29 / to 46	14 x 14 RH	AL	4	Nemesis	48-8M0055533		(1)
21-26 / 6.4-7.8	30-42 / 48-68	14 X 17 RH	AL	4	Nemesis	48-8M0055534		(1)
19-22 / 5.8-6.7	36-49 / 58-79	14 X 19 RH	AL	4	Nemesis	48-8M0055535		(1)
17-20 / 5.2-6.1	42-56 / 68-90	14 X 21 RH	AL	4	Nemesis	48-8M0055536		(1)
15-19 / 4.5-5.8	50-64 / 81-103	14 X 23 RH	AL	4	Nemesis	48-8M0055537		(1)
House/Pontoon	10-25 / 16-40	16 X 13 RH	AL	3	Black Diamond	QA2004X	391536	(1)
House/Cruisers	24-36 / 39-58	15 1/2 X 15 RH	AL	3	Black Diamond	QA2008X		(1)
House/Cruisers	24-36 / 39-58	15 1/2 X 15 RH	AL	3	Black Diamond	QA2008X	391535	(1)
21-26 / 6.4-7.8	30-42 / 48-68	15 X 17 RH	AL	3	Black Diamond	QA1912X	391200	(1)
19-22 / 5.8-6.7	36-49 / 58-79	14 1/2 X 19 RH	AL	3	Black Diamond	QA1916X	391201	(1)
17-20 / 5.2-6.1	42-56 / 68-90	14 1/4 X 21 RH	AL	3	Black Diamond	QA1918X	391202	(1)
15-19 / 4.5-5.8	50-64 / 81-103	14 X 23 RH	AL	3	Black Diamond	QA1920X	391203	(1)
21-26 / 6.4-7.8	30-42 / 48-68	15 X 16 RH	AL	4	Diamond 4	QA2182X		(1)
19-22 / 5.8-6.7	36-49 / 58-79	14 1/2 X 18 RH	AL	4	Diamond 4	QA2184X		(1)
17-20 / 5.2-6.1	42-56 / 68-90	14 X 20 RH	AL	4	Diamond 4	QA2186X		(1)
House/Cruisers	24-36 / 39-58	14 1/2 X 15 RH	SS	3	Silverado	QS5050X	174926	(1)
21-26 / 6.4-7.8	30-42 / 48-68	14 1/2 X 17 RH	SS	3	Silverado	QS5052X	176615	(1)
19-22 / 5.8-6.7	36-49 / 58-79	14 X 19 RH	SS	3	Silverado	QS5054X	176617	(1)
17-20 / 5.2-6.1	42-56 / 68-90	13 3/4 X 21 RH	SS	3	Silverado	QS5056X	176619	(1)
21-26 / 6.4-7.8	30-42 / 48-68	13 1/2 X 17 RH	SS	5	QST 5	QS1154X		(1)
19-22 / 5.8-6.7	36-49 / 58-79	13 1/3 X 19 RH	SS	5	QST 5	QS5758X		(1)
17-20 / 5.2-6.1	42-56 / 68-90	13 1/3 X 21 RH	SS	5	QST 5	QS5760X		(1)
House/Cruisers	24-36 / 39-58	15 3/4 X 15 RH	SS	3	Thunderbolt	QS5002X		(1)
21-26 / 6.4-7.8	30-42 / 48-68	15 1/2 X 17 RH	SS	3	Thunderbolt	QS5004X		(1)
19-22 / 5.8-6.7	36-49 / 58-79	15 1/4 X 19 RH	SS	3	Thunderbolt	QS5006X		(1)
17-20 / 5.2-6.1	42-56 / 68-90	14 3/4 X 21 RH	SS	3	Thunderbolt	QS5008X		(1)
17-20 / 5.2-6.1	42-56 / 68-90	14 5/8 X 21 RH	SS	3	Torrent	QS5862X		(1)(2)
15-19 / 4.5-5.8	50-64 / 81-103	14 5/8 X 23 RH	SS	3	Torrent	QS5864X		(1)(2)
High Perf.	55-67 / 89-108	14 5/8 X 25 RH	SS	3	Torrent	QS5866X		(1)(2)
Pontoon	10-25 / 16-40	16 X 11P RH	SS	3	Q3	48-8M0103516		(1)
Pontoon	11-26 / 17-41	15.6 X 13P RH	SS	3	Q3	48-8M0103517		(1)
Pontoon	12-27 / 18-42	15.3 X 14P RH	SS	3	Q3	48-8M0103518		(1)
Pontoon/Cruiser	17-30 / 27-49	15 X 15P RH	SS	3	Q3	48-8M0103519		(1)
21-26 / 6.4-7.8	24-36 / 43-63	14.7 X 16P RH	SS	3	Q3	48-8M0103520		(1)
21-26 / 6.4-7.8	30-42 / 48-68	14.5 X 17P RH	SS	3	Q3	48-8M0103521		(1)
19-22 / 5.8-6.7	33-45 / 53-73	14.2 X 18P RH	SS	3	Q3	48-8M0103522		(1)
19-22 / 5.8-6.7	36-49 / 58-79	14.0 X 19P RH	SS	3	Q3	48-8M0103523		(1)
17-20 / 5.2-6.1	39-52 / 63-84	13.8 X 20P RH	SS	3	Q3	48-8M0103524		(1)

QUICKSILVER PROPELLER APPLICATION CHARTS

Length (ft/m)	Current MPH/KPH	Propeller Size	Matl	Blades	Style	Quicksilver P/N	OEM P/N	Hub System
17-20 / 5.2-6.1	42-56 / 68-90	13.6 X 21P RH	SS	3	Q3	48-8M0103525		(1)
21-26 / 6.4-7.8	30-42 / 48-68	14.6 X 17P RH	SS	4	Q4	48-8M0103526		(1)(2)
19-22 / 5.8-6.7	36-49 / 58-79	14.6 X 19P RH	SS	4	Q4	48-8M0103528		(1)(2)
17-20 / 5.2-6.1	42-56 / 68-90	14.6 X 21P RH	SS	4	Q4	48-8M0103530		(1)(2)
15-19 / 4.5-5.8	50-64 / 81-103	14.6 X 23P RH	SS	4	Q4	48-8M0103532		(1)(2)
LH Propellers (1)		15 X 16 LH	AL	4	Diamond 4	QA2183X		(1)
		14 1/2 X 18 LH	AL	4	Diamond 4	QA2185X		(1)
		14 X 20 LH	AL	4	Diamond 4	QA2187X		(1)
		15 3/4 X 15 RH	SS	3	Thunderbolt - New -	QS5003X		(1)
		15 1/2 X 17 LH	SS	3	Thunderbolt	QS5005X		(1)
		15 1/4 X 19 LH	SS	3	Thunderbolt	QS5007X		(1)
		14 3/4 X 21 LH	SS	3	Thunderbolt	QS5009X		(1)
		14.6 X 17P RH	SS	4	Q4	48-8M0103527		(1)(2)
		14.6 X 19P RH	SS	4	Q4	48-8M0103529		(1)(2)
		14.6 X 21P RH	SS	4	Q4	48-8M0103531		(1)(2)
		14.6 X 23P RH	SS	4	Q4	48-8M0103533		(1)(2)

(1) Use Flo-Torq II hub kit 835265Q02 for 1991 and newer non E-TEC G2 applications. Use Flo-Torq II hub kit 835267Q1 for 1990 and older applications. Use Flo-Torq II hub kit 8M0107220 for 2014 and newer E-TEC G2 outboards 200-300 hp. Purchase separately.

(2) Use forward bushing 23-856163Q1 along with Flo-Torq hub kit for surface piercing applications with the Q4 and Torrent propellers. Purchase separately.

FORCE OUTBOARD APPLICATION CHARTS

3.5 HP-8 HP - Force

3.5 HP 1980-1984
5 HP 1987-1998
4-8 HP 1968-1988
Flo-Torq I Round Rubber Hub = 318304-3
Prop Pin = FA324101

Length (ft/m)	Propeller Size	Material	Blades	Quicksilver PN	Hub System
All	7.25 x 6.5 RH	Nylon	3	48-820110A20(1)	Rubber Bushing

(1) Standard with 5 HP Engine

9.9-15 Horsepower - Chrysler

9.9 HP - 15 HP 1968-1983
Pin Drive

Length (ft/m)	Current MPH/KPH	Propeller Size	Matl	Blades	Style	Quicksilver P/N	Hub System
All Purpose		8 X 8.5 RH	PL	3	Black Diamond	48-FP6430	Pin Drive
All Purpose		8 X 9 RH	PL	3	Black Diamond	FP6477	Pin Drive

9.9-15 Horsepower - Force

9.9 HP 1996-1998
15 HP 1996-1998
8 Tooth Spline

Length (ft/m)	Current MPH/KPH	Propeller Size	Matl	Blades	Style	Quicksilver P/N	OEM P/N	Hub System
Work	to 12 / to 19	9 3/4 X 5 1/2 RH	AL	3	Black Diamond		828148A12	Rubber Bushing
15-20 / 4.5-6.1	15-18 / 24-29	9 X 7 RH	AL	3	Black Diamond	QA2124R	828152A12	Rubber Bushing
14-19 / 4.2-2.8	16-22 / 25-35	9 X 8 RH	AL	3	Black Diamond	QA2126R	828154A12	Rubber Bushing
to 17 / to 5.2	19-24 / 31-38	9 X 9 RH	AL	3	Black Diamond	QA2128R	828156A12	Rubber Bushing
to 16 / to 4.8	21-28 / 33-45	9 X 10 1/2 RH	AL	3	Black Diamond	QA2130R	828158A12	Rubber Bushing

25 Horsepower - Force

25 HP 3 Cyl. 1995-1998
10 Tooth Spline

Length (ft/m)	Current MPH/KPH	Propeller Size	Matl	Blades	Style	Quicksilver P/N	OEM P/N	Hub System
12-15 / 3.6-4.5	24-30 / 38-48	10 3/8 X13 RH	AL	3	Black Diamond	QA2106R	19640A40	Rubber Bushing
12-15 / 3.6-4.5	24-30 / 38-48	10 3/8 X 13 RH	SS	3	Silverado	QS5180R	19644A5	Rubber Bushing

40-75 Horsepower - Force

40 - 50 HP 1995-1998
75 HP 1996-98
13 Tooth Spline

Length (ft/m)	Current MPH/KPH	Propeller Size	Matl	Blades	Style	Quicksilver P/N	OEM P/N	Hub System
House/Work	to 17 / to 27	12 1/2 X 8 RH	AL	3	Black Diamond	QA2060X	42738A11	(1)
Work/Pontoon	13-18 / 21-29	12 1/4 X 9 RH	AL	3	Black Diamond	QA2062X	87818A11	(1)
17-22 / 5.2-6.7	18-22 / 29-35	11 1/4 X 10 RH	AL	3	Black Diamond	QA2064X	73132A40	(1)
16-20 / 4.8-6.1	20-24 / 32-38	10 7/8 X 11 RH	AL	3	Black Diamond	QA2070X	85632A40	(1)
15-19 / 4.5-5.8	23-27 / 37-43	10 3/4 X 12 RH	AL	3	Black Diamond	QA2072X	816702A40	(1)
15-19 / 4.5-5.8	23-27 / 37-43	10 5/8 X 12 RH	AL	3	Black Diamond	QA2074X	73134A40	(1)
15-18 / 4.5-5.5	26-30 / 42-48	10 1/2 X 13 RH	AL	3	Black Diamond	QA2076X	816704A40	(1)
15-18 / 4.5-5.5	26-30 / 42-48	10 3/8 X 13 RH	AL	3	Black Diamond	QA2078X	73136A40	(1)
14-17 / 4.2-5.2	29-32 / 46-51	10 3/8 X 14 RH	AL	3	Black Diamond	QA2080X	816706A40	(1)
14-17 / 4.2-5.2	29-32 / 46-51	10 1/4 X 14 RH	AL	3	Black Diamond	QA2082X	73138A40	(1)
13-16 / 4.0-4.8	31-34 / 50-54	10 1/8 X 15 RH	AL	3	Black Diamond	QA2084X	73140A40	(1)
15-19 / 4.5-5.8	23-27 / 37-43	10.6 X 12 RH	AL	4	Nemesis	48-8M8027511	48-8M8026625	(1)
15-18 / 4.5-5.5	26-30 / 42-48	10.3X 13 RH	AL	4	Nemesis	48-8M8027512	48-8M8026630	(1)
14-17 / 4.2-5.2	29-32 / 46-51	10.1 X 14 RH	AL	4	Nemesis	48-8M8027513	48-8M8026635	(1)
13-16 / 4.0-4.8	31-34 / 50-54	10.1 X 15 RH	AL	4	Nemesis	48-8M8027514	48-8M8026640	(1)
15-19 / 4.5-5.8	23-27 / 37-43	11 X 12 RH	SS	3	Silverado	QS5164X	855856A5	(1)
15-18 / 4.5-5.5	26-30 / 42-48	10 1/2 X 13 RH	SS	3	Silverado	QS5166X	855858A5	(1)
14-17 / 4.2-5.2	29-32 / 46-51	10 3/8 X 14 RH	SS	3	Silverado	QS5168X	855860A5	(1)
13-16 / 4.0-4.8	31-34 / 50-54	10 1/4 X 15 RH	SS	3	Silverado	QS5170X	855862A5	(1)

(1) Flo-Torq Reflex Hub System. Hub and required hardware included in box.

75-150 Horsepower - Force

75 HP 1999 & Newer
90, 120, 150 HP 1995 & Newer
15 Tooth Spline

Length (ft/m)	Current MPH/KPH	Propeller Size	Matl	Blades	Style	Quicksilver P/N	OEM P/N	Hub System
House/Work	to 14 / to 23	14 X 9 RH	AL	3	Black Diamond	QA2026X	854340A45	(1)
Pontoon/Work	to 19 / to 31	14 X 10 RH	AL	3	Black Diamond	QA2028X	854342A45	(1)
Pontoon	to 19 / to 31	14 X 10 RH	AL	3	Black Diamond	QA2828X	854342CP1	(1)(2)
25+ / 7.6	18-21 / 29-34	14 X 11 RH	AL	3	Black Diamond	QA2030X	77338A45	(1)
Pontoon	18-21 / 29-34	14 X 11 RH	AL	3	Black Diamond	QA2830X	77338CP1	(1)(2)
22+ / 6.7	24-27 / 38-43	14 X 13 RH	AL	3	Black Diamond	QA2032X	77340A45	(1)
Pontoon	24-27 / 38-43	14 X 13 RH	AL	3	Black Diamond	QA2832X	77340CP1	(1)(2)
19-24 / 5.8-7.3	30-33 / 48-52	13 3/4 X 15 RH	AL	3	Black Diamond	QA2034X	77342A45	(1)
17-21 / 5.2-6.4	36-39 / 58-63	13 1/4 X 17 RH	AL	3	Black Diamond	QA2036X	77344A45	(1)
16-19 / 4.8-5.8	41-45 / 66-72	13 X 19 RH	AL	3	Black Diamond	QA2038X	77346A45	(1)
15-18 / 4.5-5.5	43-48 / 69-77	12 3/4 X 21 RH	AL	3	Black Diamond	QA2040X	77348A45	(1)
to 16 / to 4.8	46-52 / 74-84	12 1/2 X 23 RH	AL	3	Black Diamond	QA2042X	77350A45	(1)
Pontoon	to 19 / to 31	13.8 X 10 RH	AL	4	Nemesis Pontoon	48-8M8027497	48-8M8026555	(1)
Pontoon	18-21 / 29-34	13.8 X 11 RH	AL	4	Nemesis Pontoon	48-8M8027498	48-8M8026560	(1)
Pontoon	24-27 / 38-43	13.8 X 13 RH	AL	4	Nemesis Pontoon	48-8M8027500	48-8M8026570	(1)
19-24 / 5.8-7.3	30-33 / 48-52	13.4X 15 RH	AL	4	Nemesis	48-8M8027502	48-8M8026570	(1)
17-21 / 5.2-6.4	36-39 / 58-63	13.0 X 17 RH	AL	4	Nemesis	48-8M8027504	48-8M8026590	(1)

QUICKSILVER PROPELLER APPLICATION CHARTS

Length (ft/m)	Current MPH/KPH	Propeller Size	Matl	Blades	Style	Quicksilver P/N	OEM P/N	Hub System
16-19 / 4.8-5.8	41-45 / 66-72	12.5 X 19 RH	AL	4	Nemesis	48-8M8027506	48-8M8026600	(1)
19-24 / 5.8-7.3	30-33 / 48-52	13 3/8 X 14 RH	SS	3	Silverado	QS5114X	17314A46	(1)
17-21 / 5.2-6.4	36-39 / 58-63	13 1/8 X 16 RH	SS	3	Silverado	QS5116X	16986A46	(1)
16-19 / 4.8-5.8	41-45 / 66-72	13 X 18 RH	SS	3	Silverado	QS5118X	16988A46	(1)

(1) Use Flo-Torq II attaching hardware kit 835257Q1. Purchase separately.

(2) Extra Cup Version.

Force 85-150 and All L-Drives Pre 1995 No Thru or Thru Hub Exhaust

85, 125 HP 1988-1989
90, 120 HP 1990-1994
90-120 HP L Drive 1989-1991
150 HP 1989-1994
150 HP L Drive 1991
15 Tooth Spline

Propeller Size	Material	Blades	Style	Quicksliver P/N	Hub System
13 X 19 RH	AL	3	Black Diamond	48-FP686-4	Rubber Bushing
13-1/2 X 17 RH	AL	3	Black Diamond	48-FP685-3	Rubber Bushing
13-1/2 X 15 RH Cupped	AL	3	Black Diamond	48-FP669-3	Rubber Bushing
13-1/2 X 15 RH	AL	3	Black Diamond	48-FP692-3	Rubber Bushing
14 X 13 RH	AL	3	Black Diamond	48-FP743-2	Rubber Bushing

HONDA OUTBOARD APPLICATION CHARTS

7.5-10 Horsepower - Honda

7.5 HP 1978-87
BF 8 HP 1987-1999
BF 100 (10 HP) All Years
Pin Drive

Length (ft/m)	Current MPH/KPH	Propeller Size	Matl	Blades	Style	Quicksilver P/N	OEM P/N	Hub System
All Purpose		9 X 10 RH	AL	3	Black Diamond	QA3150R		Rubber Bushing
All Purpose		9 1/4 X 11 RH	AL	3	Black Diamond	QA3152R		Rubber Bushing

9.9-20 Horsepower - Honda

BF 8 2000 & Newer
BF 9.9 HP 1988 & Newer
BF 15 HP All Years
BF 20 2003 & Newer
8 Tooth Spline

Length (ft/m)	Current MPH/KPH	Propeller Size	Matl	Blades	Style	Quicksilver P/N	OEM P/N	Hub System
14-16 / 4.2-4.8	17-21 / 27-34	9 1/4 X 9 RH	AL	3	Black Diamond	QA3906R	58130-ZV4-701ZA	Rubber Bushing
to 15 / to 4.5	21-26 / 34-42	9 1/4 X 10 1/2 RH	AL	3	Black Diamond	QA3914R	58130-ZV4-030ZA	Rubber Bushing

25-30 Horsepower

25-30 Horsepower
BF 25 All Years
BF 30 All Years
10 Tooth Spline
Use existing Honda nut and washer

Length (ft/m)	Current MPH/KPH	Propeller Size	Material	Blades	Style	Quicksilver P/N	OEM P/N	Hub System
16+ / 4.8+	to 20 / to 32	10 x 8 RH	Alum	3	Black Diamond	QA2190R	48-896890A10	Rubber Bushing
13-17 / 3.9-5.2	17-26 / 27-42	9.75 x 9.5 RH	Alum	3	Black Diamond	QA2192R	48-896892A40	Rubber Bushing
13-16 / 3.9-4.8	21-31 / 34-47	9.5 x 11 RH	Alum	3	Black Diamond	QA2196R	48-896896A40	Rubber Bushing
to 16 / to 4.8	25-36 / 40-58	9.25 x 12.5 RH	Alum	3	Black Diamond	QA2200R	48-896900A40	Rubber Bushing
13-17 / 3.9-5.2	17-26 / 27-42	9.3 x 9.5 RH	Alum	4	Nemesis	48-8M8027516	48-8M8026650	Rubber Bushing

Length (ft/m)	Current MPH/KPH	Propeller Size	Material	Blades	Style	Quicksilver P/N	OEM P/N	Hub System
13-16 / 3.9-4.8	21-31 / 34-47	9.3 x 11 RH	Alum	4	Nemesis	48-8M8027517	48-8M8026655	Rubber Bushing

35-60 Horsepower - Honda

BF 35 HP 1991-94
BF 40 HP 1995 & Newer
BF 45 HP 1991-94
BF 50/50A HP 1995 & Newer
BF 60 Small Gearcase
13 Tooth Spline
Flo-Torq Reflex Propeller. Replace existing forward thrust washer with Quicksilver thrust washer 8M0046466. Purchase separately.

Length (ft/m)	Current MPH/KPH	Propeller Size	Matl	Blades	Style	Quicksilver P/N	OEM P/N	Hub System
House/Pontoon	11-17 / 17-27	12 1/2 X 8 RH	AL	3	Black Diamond	QA2060X		(1)
Pontoon	16-21 / 25-34	12 1/4 X 9 RH	AL	3	Black Diamond	QA2062X	58130-ZV5-009AH	(1)
17+ / 5.2	20-24 / 32-38	11 1/4 X 10 RH	AL	3	Black Diamond	QA2064X		(1)
16-18 / 4.8-5.5	23-28 / 37-45	10 7/8 X 11 RH	AL	3	Black Diamond	QA2070X	58130-ZV5-850ZA	(1)
15-17 / 4.5-5.2	26-32 / 42-51	10 3/4 X 12 RH	AL	3	Black Diamond	QA2072X	58130-ZV5-012AH	(1)
15-17 / 4.5-5.2	26-32 / 42-51	10 5/8 X 12 RH	AL	3	Black Diamond	QA2074X	58130-ZV5-000ZA	(1)
14-17 / 4.2-5.2	30-35 / 48-57	10 1/2 X 13 RH	AL	3	Black Diamond	QA2076X	58130-ZV5-013AH	(1)
14-17 / 4.2-5.2	30-35 / 48-57	10 3/8 X 13 RH	AL	3	Black Diamond	QA2078X	58130-ZV5-012AH	(1)
14-16 / 4.2-4.8	33-39 / 53-63	10 3/8 X 14 RH	AL	3	Black Diamond	QA2080X	58130-ZV5-014AH	(1)
14-16 / 4.2-4.8	33-39 / 53-63	10 1/4 X 14 RH	AL	3	Black Diamond	QA2082X	58130-ZV5-013AH	(1)
13-15 / 4.0-4.5	36-43 / 58-69	10 1/8 X 15 RH	AL	3	Black Diamond	QA2084X	58130-ZV5-870ZA	(1)
15-17 / 4.5-5.2	26-32 / 42-51	10.6 X 12 RH	AL	4	Nemesis	48-8M8027511		(1)
14-17 / 4.2-5.2	30-35 / 48-57	10.3 X 13 RH	AL	4	Nemesis	48-8M8027512		(1)
14-16 / 4.2-4.8	33-39 / 53-63	10.1 X 14 RH	AL	4	Nemesis	48-8M8027513		(1)
13-15 / 4.0-4.5	36-43 / 58-69	10.1 X 15 RH	AL	4	Nemesis	48-8M8027514		(1)
15-17 / 4.5-5.2	26-32 / 42-52	11 X 12 RH	SS	3	Silverado	QS5164X	58110-ZV5-E30	(1)
14-17 / 4.2-5.2	30-35 / 48-57	10 1/2 X 13 RH	SS	3	Silverado	QS5166X	58110-ZV5-E20	(1)
14-16 / 4.2-4.8	33-39 / 53-63	10 3/8 X 14 RH	SS	3	Silverado	QS5168X	58110-ZV5-E10	(1)
13-15 / 4.0-4.5	36-43 / 58-69	10 1/4 X 15 RH	SS	3	Silverado	QS5170X	58110-ZV5-E00	(1)

(1) Flo-Torq Reflex Propeller. Replace existing forward thrust washer with Quicksilver thrust washer 8M0046466. Purchase separately.

60 BFP, 75-130 Horsepower - Honda

60 BFP 1995 & newer (Large Gearcase)
75 HP 1995 & Newer
90 HP 1995 & Newer
115 HP 1998 & Newer
130 HP 1998 & Newer
15 Tooth Spline

Length (ft/m)	Current MPH/KPH	Propeller Size	Matl	Blades	Style	Quicksilver P/N	OEM P/N	Hub System
House/Work	to 14 / to 23	14 X 9 RH	AL	3	Black Diamond	QA2026X		(1)
Pontoon/Work	to 19 / to 31	14 X 10 RH	AL	3	Black Diamond	QA2028X		(1)
Pontoon/Work	to 19 / to 31	14 X 10 RH	AL	3	Black Diamond	QA2828X		(1)(2)
25+ / 7.8	18-21 / 29-34	14 X 11 RH	AL	3	Black Diamond	QA2030X	58130-ZW1-W01 ZA	(1)
Pontoon	18-21 / 29-34	14 X 11 RH	AL	3	Black Diamond	QA2830X		(1)(2)
22+ / 6.7	24-27 / 39-44	14 X 13 RH	AL	3	Black Diamond	QA2032X	58130-ZW1-W11 ZA	(1)
Pontoon	24-27 / 39-44	14 X 13 RH	AL	3	Black Diamond	QA2832X		(1)(2)
19-24 / 5.8-7.3	30-33 / 48-53	13 3/4 X 15 RH	AL	3	Black Diamond	QA2034X	58130-ZW1-W21 ZA	(1)
17-21 / 5.2-6.4	36-39 / 58-63	13 1/4 X 17 RH	AL	3	Black Diamond	QA2036X	58130-ZW1-W31 ZA	(1)
16-19 / 4.8-5.8	41-45 / 66-73	13 X 19 RH	AL	3	Black Diamond	QA2038X	58130-ZW1-W61 ZA	(1)
15-18 / 4.5-4.5	43-48 / 69-77	12 3/4 X 21 RH	AL	3	Black Diamond	QA2040X	58130-ZW1-W41	(1)
to 16 / to 4.8	46-52 / 74-84	12 1/2 X 23 RH	AL	3	Black Diamond	QA2042X	58130-ZW1-W50	(1)
Pontoon	to 19 / to 31	13.8 X 10 RH	AL	4	Nemesis Pontoon	48-8M8027497		(1)
Pontoon	18-21 / 29-34	13.8 X 11 RH	AL	4	Nemesis Pontoon	48-8M8027498		(1)
Pontoon	24-27 / 39-44	13.8 X 13 RH	AL	4	Nemesis Pontoon	48-8M8027500		(1)

QUICKSILVER PROPELLER APPLICATION CHARTS

Length (ft/m)	Current MPH/KPH	Propeller Size	Matl	Blades	Style	Quicksilver P/N	OEM P/N	Hub System
19-24 / 5.8-7.3	30-33 / 48-53	13.4 X 15 RH	AL	4	Nemesis	48-8M8027502		(1)
17-21 / 5.2-6.4	36-39 / 58-63	13.0 X 17 RH	AL	4	Nemesis	48-8M8027504		(1)
16-19 / 4.8-5.8	41-45 / 66-73	12.5 X 19 RH	AL	4	Nemesis	48-8M8027506		(1)
23-26 / 7.0-7.8	25-29 / 42-47	14 X 10 RH	SS	3	Silverado	48-8M0055292		(1)
21-25 / 6.4-7.8	27-31 / 45-50	14 X 12 RH	SS	3	Silverado	48-8M0055293		(1)
19-24 / 5.8-7.3	30-33 / 48-53	13 3/8 X 14 RH	SS	3	Silverado	QS5114X	58133-ZW1-A13AH	(1)
17-21 / 5.2-6.4	36-39 / 58-63	13 1/8 X 16 RH	SS	3	Silverado	QS5116X	58133-ZW1-A15AH	(1)
16-19 / 4.8-5.8	41-45 / 66-73	13 X 18 RH	SS	3	Silverado	QS5118X	58133-ZW1-A17AH	(1)

(1) Use Flo-Torq II attaching hardware kit 835277Q1for 75-90 HP thru 1998 or 835279Q2 for 75-90 HP 1999 and newer, 115-130 HP all years. Purchase separately.

(2) Extra Cup Version

115 D, 135-250 Horsepower - Honda

115D, 135 -150 HP 2004 & Newer
200 - 250 Horsepower (4-Stroke) 2002 & Newer
15 Tooth Spline

Length (ft/m)	Current MPH/KPH	Propeller Size	Matl	Blades	Style	Quicksilver P/N	Hub System
Pontoon	to 26 / to 42	14 X 12 RH	AL	4	Nemesis	48-8M0055531	(1)
Pontoon	to 29 / to 46	14 X 14 RH	AL	4	Nemesis	48-8M0055533	(1)
21-25 / 6.4-7.8	36-44 / 58-71	14 X 17 RH	AL	4	Nemesis	48-8M0055534	(1)
19-23 / 5.8-7.0	42-50 / 68-81	14 X 19 RH	AL	4	Nemesis	48-8M0055535	(1)
18-22 / 5.5-6.7	47-56 / 76-90	14 X 21 RH	AL	4	Nemesis	48-8M0055536	(1)
17-20 / 5.2-6.1	53-61 / 85-98	14 X 23 RH	AL	4	Nemesis	48-8M0055537	(1)
House/Work	to 24 / to 39	16 X 11 RH	AL	3	Black Diamond	QA2000X	(1)
25-30 / 7.8-9.1	23-32 / 37-52	16 X 13 RH	AL	3	Black Diamond	QA2004X	(1)
23-29 / 7.0-8.8	27-35 / 44-56	16 X 14 RH	AL	3	Black Diamond	QA2006X	(1)
22-27 / 6.7-8.2	30-38 / 48-61	15 1/2 X 15 RH	AL	3	Black Diamond	QA2008X	(1)
23-26 / 7.0-7.8	33-40 / 53-65	16 X 16 RH	AL	3	Black Diamond	QA2010X	(1)
21-25 / 6.4-7.8	36-44 / 58-71	15 X 17 RH	AL	3	Black Diamond	QA1912X	(1)
20-24 / 6.1-7.3	39-47 / 63-76	15 1/2 X 18 RH	AL	3	Black Diamond	QA2014X	(1)
19-23 / 5.8-7.0	42-50 / 68-81	14 1/2 X 19 RH	AL	3	Black Diamond	QA1916X	(1)
18-22 / 5.5-6.7	47-56 / 76-90	14 1/4 X 21 RH	AL	3	Black Diamond	QA1918X	(1)
17-20 / 5.2-6.1	53-61 / 85-98	14 X 23 RH	AL	3	Black Diamond	QA1920X	(1)
21-25 / 6.4-7.8	36-44 / 58-71	15 X 16 RH	AL	4	Diamond 4	QA2182X	(1)
19-23 / 5.8-7.0	42-50 / 68-81	14 1/2 X 18 RH	AL	4	Diamond 4	QA2184X	(1)
18-22 / 5.5-6.7	47-56 / 76-90	14 X 20 RH	AL	4	Diamond 4	QA2186X	(1)
23-27 / 6.7-8.2	30-38 / 48-61	14 1/2 X 15 RH	SS	3	Silverado	QS5050X	(1)
21-25 / 6.4-7.8	36-44 / 58-71	14 1/2 X 17 RH	SS	3	Silverado	QS5052X	(1)
19-23 / 5.8-7.0	42-50 / 68-81	14 X 19 RH	SS	3	Silverado	QS5054X	(1)
18-22 / 5.5-6.7	47-56 / 76-90	13 3/4 X 21 RH	SS	3	Silverado	QS5056X	(1)
21-25 / 6.4-7.8	36-44 / 58-71	13 1/2 X 17 RH	SS	5	QST 5	QS1154X	(1)
19-23 / 5.8-7.0	42-50 / 68-81	13 1/3 X 19 RH	SS	5	QST 5	QS5758X	(1)
18-22 / 5.5-6.7	47-56 / 76-90	13 1/3 X 21 RH	SS	5	QST 5	QS5760X	(1)
23-27 / 6.7-8.2	30-38 / 48-61	15 3/4 X 15 RH	SS	3	Thunderbolt	QS5002X	(1)
21-25 / 6.4-7.8	36-44 / 58-71	15 1/2 X 17 RH	SS	3	Thunderbolt	QS5004X	(1)
20-23 / 6.1-7.0	42-50 / 68-81	15 1/4 X 19 RH	SS	3	Thunderbolt	QS5006X	(1)
19-23 / 5.8-6.7	47-56 / 76-90	14 3/4 X 21 RH	SS	3	Thunderbolt	QS5008X	(1)
18-22 / 5.5-6.7	47-56 / 76-90	14 5/8 X 21 RH	SS	3	Torrent	QS5862X	(1)(2)
17-20 / 5.2-6.1	53-61 / 85-98	14 5/8 X 23 RH	SS	3	Torrent	QS5864X	(1)(2)
to 19 / to 5.8	59-69 / 95-111	14 5/8 X 25 RH	SS	3	Torrent	QS5866X	(1)(2)
Pontoon	10-25 / 16-40	16 X 11P RH	SS	3	Q3	48-8M0103516	(1)
Pontoon	11-26 / 17-41	15.6 X 13P RH	SS	3	Q3	48-8M0103517	(1)
Pontoon	12-27 / 18-42	15.3 X 14P RH	SS	3	Q3	48-8M0103518	(1)
Pontoon/Cruiser	17-30 / 27-49	15 X 15P RH	SS	3	Q3	48-8M0103519	(1)

Length (ft/m)	Current MPH/KPH	Propeller Size	Matl	Blades	Style	Quicksilver P/N	Hub System
21-26 / 6.4-7.8	24-36 / 39-58	14.7 X 16P RH	SS	3	Q3	48-8M0103520	(1)
21-26 / 6.4-7.8	30-42 / 48-68	14.5 X 17P RH	SS	3	Q3	48-8M0103521	(1)
19-22 / 5.8-6.7	33-45 / 53-73	14.2 X 18P RH	SS	3	Q3	48-8M0103522	(1)
19-22 / 5.8-6.7	36-49 / 58-79	14 X 19P RH	SS	3	Q3	48-8M0103523	(1)
17-20 / 5.2-6.1	39-52 / 63-84	13.8 X 20P RH	SS	3	Q3	48-8M0103524	(1)
17-20 / 5.2-6.1	42-56 / 68-90	13.6 X 21P RH	SS	3	Q3	48-8M0103525	(1)
21-26 / 6.4-7.8	30-42 / 48-68	14.6 X 17P RH	SS	4	Q4	48-8M0103526	(1)(2)
19-22 / 5.8-6.7	36-49 / 58-79	14.6 X 19P RH	SS	4	Q4	48-8M0103528	(1)(2)
17-20 / 5.2-6.1	42-56 / 68-90	14.6 X 21P RH	SS	4	Q4	48-8M0103530	(1)(2)
15-19 / 4.5-5.8	50-64 / 81-103	14.6 X 23P RH	SS	4	Q4	48-8M0103532	(1)(2)
LH Propellers (1)		15.8 X 15 LH	SS	3	Thunderbolt	QS5005X	(1)
		15.5 X 17 LH	SS	3	Thunderbolt	QS5007X	(1)
		15.3 X 19 LH	SS	3	Thunderbolt	QS5009X	(1)
		14.8 X 21 LH	SS	3	Thunderbolt	QS5011X	(1)
		14.6 X 17P LH	SS	4	Q4	48-8M0103527	(1)(2)
		14.6 X 19P LH	SS	4	Q4	48-8M0103529	(1)(2)
		14.6 X 21P LH	SS	4	Q4	48-8M0103531	(1)(2)
		14.6 X 23P LH	SS	4	Q4	48-8M0103533	(1)

(1) Use Flo-Torq II attaching hardware kit 835278Q1. Purchase separately..

(2) Use forward bushing 23-856163Q1 with Flo-Torq II hub kit for surface peircing applications with Q4 and Torrent propellers. Purchase separately.

25-30 Horsepower

25-30 Horsepower
BF 25 All Years
BF 30 All Years
10 Tooth Spline
Use existing Honda nut and washer

Length (ft/m)	Current MPH/KPH	Propeller Size	Material	Blades	Style	Quicksilver P/N	OEM P/N	Hub System
16+ / 4.8+	to 20 / to 32	10 x 8 RH	Alum	3	Black Diamond	QA2190R	48-896890A10	Rubber Bushing
13-17 / 3.9-5.2	17-26 / 27-42	9.75 x 9.5 RH	Alum	3	Black Diamond	QA2192R	48-896892A40	Rubber Bushing
13-16 / 3.9-4.8	21-31 / 34-47	9.5 x 11 RH	Alum	3	Black Diamond	QA2196R	48-896896A40	Rubber Bushing
to 16 / to 4.8	25-36 / 40-58	9.25 x 12.5 RH	Alum	3	Black Diamond	QA2200R	48-896900A40	Rubber Bushing
13-17 / 3.9-5.2	17-26 / 27-42	9.3 x 9.5 RH	Alum	4	Nemesis	48-8M8027516	48-8M8026650	Rubber Bushing
13-16 / 3.9-4.8	21-31 / 34-47	9.3 x 11 RH	Alum	4	Nemesis	48-8M8027517	48-8M8026655	Rubber Bushing

MERCURY/MARINER OUTBOARD APPLICATION CHARTS

2.5 -3.5 Horsepower - Mercury/Mariner

2.5 - 3.5 Horsepower
2.5 HP 1990 & Newer
3 HP 1990 - 1992
3.3 HP 1993 & Newer
Pin Drive

Length (ft/m)	Propeller Size	Matl	Blades	Style	Quicksilver P/N	OEM P/N	Hub System
All Purpose	7.4 X 6 RH	Plastic	3	Black Diamond		48-815083A01	Pin Drive
All Purpose	7.4 X 7 RH	Plastic	3	Black Diamond	48-8M0081592	48-815083A02	Pin Drive

QUICKSILVER PROPELLER APPLICATION CHARTS

4-6 Horsepower - Mercury/Mariner

4 -6 Horspower
4 - 5 HP 2-Stroke 1987 & Newer
4, 5, 6 HP -Stroke 1999 & Newer
12 Tooth Spline

Length (ft/m)	Propeller Size	Matl	Blades	Style	Quicksilver P/N	OEM P/N	Hub System
All Purpose	7.8 X 9 RH	AL	3	Black Diamond	48-8M0081239		Rubber Bushing
All Purpose	7.8 X 8 RH	AL	3	Black Diamond	QA3184R	48-812950A02(2)	Rubber Bushing
All Purpose	7.8 X 7 RH	AL	3	Black Diamond	QA3182R	48-812949A02(1)	Rubber Bushing
All Purpose	7.9 X 6 RH	AL	3	Black Diamond	48-8M0081238	48-812951A02	Rubber Bushing

(1) Standard with 4 Hp, 2-Stroke and FourStroke

(2) Standard with 5 and 6 Hp FourStroke

Mercury 75 (7.5HP) and 110 (9.8HP)

Mercury 75 (7.5HP) and 110(9.8) 1968-1984
8 Spline
1968 thru 1978 - Thrust Hub 86665A1 Spacer 11-64075A1 Nut 11-46335 Washer 12-27025
1972 thru 1978 - Nut 11-64075A1

Length	Current MPH	Propeller Size	Material	Blades	Style	Quicksilver P/N	OEM P/N
To 15'	Up to 20	9 X 9 RH	AL	2	Black Diamond		

8 Horsepower - Mercury/Mariner

8 HP 1976-84 Mariner
Pin Drive

Length (ft/m)	Current MPH/KPH	Propeller Size	Matl	Blades	Style	Quicksilver P/N	OEM P/N	Hub System
14-18 / 4.2-5.5	to 15 / to 24	8 X 7 RH	AL	3	Black Diamond	QA3178R	82764	Rubber Bushing

8/9.9 Horsepower (4-Stroke) - Mercury/Mariner

8/9.9 (4-Stroke) 2005 and newer
Std. gearcase only (Not Bigfoot)
12 Tooth Spline

Length (ft/m)	Current MPH/KPH	Propeller Size	Material	Blades	Style	Quicksilver P/N	OEM P/N	Hub System
Kicker		8.7 x 5 RH	Alum	4	Black Diamond	QA2148R	48-812954A10	Rubber Bushing
16 + / 4.8 +	to 12 / to 19	8.9 x 6.5 RH	Alum	3	Black Diamond	QA2150R	48-897610A10	Rubber Bushing
14-17 / 4.2-5.2	8-17 / 14-27	8.9 x 7.5 RH	Alum	3	Black Diamond	QA2154R	48-897614A10(1)	Rubber Bushing
13-16 / 3.9-4.8	12-21 / 19-34	8.9 x 8.5 RH	Alum	3	Black Diamond	QA2158R	48-897618A10(2)	Rubber Bushing

(1) Standard with 8 Hp FourStroke

(2) Standard with 9.9 Hp FourStroke

6-15 Horsepower - Mercury/Mariner

6, 8, 9.9 and 15 HP 2-Strokes 1986 & Newer
10, 15 HP Seapro/Marathon 1995 & Newer
8/9.9 HP (Not Bigfoot) 4-Strokes 1995-2004
15 HP 4 Stroke 1989-2006
8 Tooth Spline

Length (ft/m)	Current MPH/KPH	Propeller Size	Matl	Blades	Style	Quicksilver P/N	OEM P/N	Hub System
Work/Sail	6-13 / 10-21	9 3/4 X 5 1/2 RH	AL	3	Black Diamond		48-828150A12	Rubber Bushing
Kicker		9 3/4 X 6	AL	4	Black Diamond	48-850204A12	48-850204A12	Rubber Bushing
15-20 / 4.5-6.1	12-17 / 19-27	9 1/4 X 7 RH	AL	3	Black Diamond	QA2124R	48-828152A12	Rubber Bushing
14-20 / 4.2-6.1	16-19 / 26-31	9 X 8 RH	AL	3	Black Diamond	QA2126R	48-828154A12	Rubber Bushing
14-19 / 4.2-5.8	19-24 / 31-39	9 X 9 RH	AL	3	Black Diamond	QA2128R	48-828156A12(1)	Rubber Bushing
14-16 / 4.2-4.8	23-27 / 37-44	9 X 10 1/2 RH	AL	3	Black Diamond	QA2130R	48-828158A12	Rubber Bushing

(1) Standard with 6-15 Hp 2-Stroke and SeaPro/Marathon 10-15 Hp

15-25 Horsepower - Mariner

15 HP 1976-81 Mariner
15A 1979-82 Mariner
W15 1977-85 Mariner
20 HP 1976-79 Mariner
25 HP 1977-79 Mariner
Pin Drive

Length (ft/m)	Current MPH/KPH	Propeller Size	Matl	Blades	Style	Quicksilver P/N	OEM P/N	Hub System
12-16 / 3.6-4.8	20-28 / 32-45	9 X 10 RH	AL	3	Black Diamond	QA3150R	96625M	Rubber Bushing
12-14 / 3.6-4.2	25-32 / 40-52	9 1/4 X 11 RH	AL	3	Black Diamond	QA3152R	96623M	Rubber Bushing

9.9-25 Horsepower - Mercury/Mariner

9.9 & 15 HP Bigfoot 4-Strokes 2005 & Older
9.9 Sail Power 4 Strokes 2005 & Older
18 HP Mercury 1980-85
20 HP Mariner 1985 & Newer
20 HP Mercury 2 Stroke 1986 & Newer
25 HP Mercury 2 Stroke 1980 & Newer
25 HP Mariner 2 Stroke 1985 & Newer
25 HP SeaPro/Marathon
10 Tooth Spline

Length (ft/m)	Current MPH/KPH	Propeller Size	Matl	Blades	Style	Quicksilver P/N	OEM P/N	Hub System
12-15 / 3.6-4.5	19-30 / 31-48	10 3/8 X 13 RH	AL	3	Black Diamond	QA2106R	48- 19640A40(1)	Rubber Bushing
12-15 / 3.6-4.5	19-30 / 31-48	10 3/8 X 13 RH	SS	3	Silverado	QS5180R	48- 19644A 5	Rubber Bushing

(1) Standard with 20-25 Hp 2-Stroke

15/20 Hp 4-Stroke, 9.9 HP CT/Bigfoot 4-Stroke Mercury/Mariner

9.9 CT/Bigfoot Model Year 2005 and Newer
15/20 HP 4-Stroke 2007 and Newer
14 Tooth Spline

Length	Current MPH/KPH	Propeller Size	Material	Blades	Style	Quicksilver P/N	OEM P/N	Hub System
Kicker		10 x 5	AL	4	Black Diamond	QA2178R	48-812952A10	Rubber Hub
15-19 / 4.6-5.8	5-12 / 8-19	9.5 X 8 RH	AL	3	Black Diamond	QA2171R	48-897748A11	Rubber Hub
14-17 / 4.3-5.2	10-16 / 16-26	9.25 X 9 RH	AL	3	Black Diamond	QA2173R	48-897750A11(2)	Rubber Hub
to 16 / to 4.9	13-20 / 21-32	9.25 X 10 RH	AL	3	Black Diamond	QA2175R	48-897752A11(3)	Rubber Hub

(1) Standard with 9.9 Bigfoot and 9.9 Prokicker

(2) Standard with 15 Hp FourStroke

(3) Standard with 20 Hp FourStroke

25-30 Horsepower 4-Stroke - Mercury/Mariner

25 HP 2006 and Newer
30 HP 2006 and Newer
10 Tooth Spline

Length (ft/m)	Current MPH/KPH	Propeller Size	Material	Blades	Style	Quicksilver P/N	OEM P/N	Hub System
16+ / 4.8+	to 20 / to 32	10 x 8 RH	Alum	3	Black Diamond	QA2190R	48-896890A10	Rubber Bushing
13-17 / 3.9-5.2	17-26 / 27-42	9.75 x 9.5 RH	Alum	3	Black Diamond	QA2192R	48-896892A40	Rubber Bushing
13-16 / 3.9-4.8	21-31 / 34-47	9.5 x 11 RH	Alum	3	Black Diamond	QA2196R	48-896896A40	Rubber Bushing
to 16 / to 4.8	25-36 / 40-58	9.25 x 12.5 RH	Alum	3	Black Diamond	QA2200R	48-896900A40	Rubber Bushing
13-17 / 3.9-5.2	17-26 / 27-42	9.3 x 9.5 RH	Alum	4	Nemesis	48-8M8027516	48-8M8026650	Rubber Bushing
13-16 / 3.9-4.8	21-31 / 34-47	9.3 x 11 RH	Alum	4	Nemesis	48-8M8027517	48-8M8026655	Rubber Bushing

QUICKSILVER PROPELLER APPLICATION CHARTS

25-30 Horsepower 2-Stroke - Mariner

25 HP 1980-84 Mariner
28 HP 2-Stroke 1976-79 Mariner
30 HP 2-Stroke 1979-90 Mariner
10 Tooth Spline

Length (ft/m)	Current MPH/KPH	Propeller Size	Matl	Blades	Style	Quicksilver P/N	OEM P/N	Hub System
15-17 / 4.5-5.2	18-26 / 29-42	9 7/8 X 10 1/2 RH	AL	3	Black Diamond	QA3808R	81649M	Rubber Bushing
14-16 / 4.2-4.8	19-28 / 31-45	9 7/8 X 11 1/4 RH	AL	3	Black Diamond	QA3810R	84976M	Rubber Bushing

25 Hp CT/Bigfoot, 30-70 Hp Standard Gearcase Mercury/Mariner

402-500 Model Mercury 1974-76*, 402-500-700 Models Mercury 1977-84
650 Model Mercury 1972-76*, 25 HP CT/Bigfoot 4-stroke 1999-2005
30 HP CT/BigFoot 2010 & Newer
30 HP 2 & 4-Strokes 1994-2005, 30 HP SeaPro/Marathon All Years
35 HP 1984-89, 40 HP 2 & 4-Strokes (Not CT/Bigfoot) 1977 & Newer
40 HP Seapro/Marathon 1977 & Newer, 45HP 1986-89
48 HP Mariner All Years, 50 HP 2 & 4 Strokes (Not CT/Bigfoot) 1977 & Newer
55 HP Seapro/Marathon 1995 & Newer, 60 HP Mariner 1976*
60 HP 2 & 4 Stroke (Not CT/Bigfoot) 1978 & Newer, 70 HP 1983 & Older
13 Tooth Spline
Flo-Torq Reflex Propellers. Hub Kit included in box.
Note: Flo-Torq Reflex Propeller hardware is not compatible with older rubber hub propeller hardware.

Length (ft/m)	Current MPH/KPH	Propeller Size	Matl	Blades	Style	Quicksilver P/N	OEM P/N	Hub System
20'+ / 6.1+	to 14 / to 23	12 1/2 X 8 RH	AL	3	Black Diamond	QA2060X	48- 42738A45	Flo-Torq Reflex
19-21 / 5.8-6.4	13-18 / 21-29	12 1/4 X 9 RH	AL	3	Black Diamond	QA2062X	48- 87818A45	Flo-Torq Reflex
17-20 / 5.2-6.1	18-22 / 29-35	11 1/4 X 10 RH	AL	3	Black Diamond	QA2064X	48- 73132A45	Flo-Torq Reflex
16-19 / 4.8-5.8	21-25 / 34-41	10 7/8 X 11 RH	AL	3	Black Diamond	QA2070X	48- 85632A45	Flo-Torq Reflex
15-18 / 4.5-5.5	23-28 / 37-45	10 3/4 X 12 RH	AL	3	Black Diamond	QA2072X	48-816702A45	Flo-Torq Reflex
15-18 / 4.5-5.5	23-28 / 37-45	10 5/8 X 12 RH	AL	3	Black Diamond	QA2074X	48- 73134A45	Flo-Torq Reflex
14-18 / 4.2-5.5	27-32 / 44-52	10 1/2 X 13 RH	AL	3	Black Diamond	QA2076X	48-816704A45	Flo-Torq Reflex
14-18 / 4.2-5.5	27-32 / 44-52	10 3/8 X 13 RH	AL	3	Black Diamond	QA2078X	48- 73136A45	Flo-Torq Reflex
14-16 / 4.2-4.8	31-35 / 50-56	10 3/8 X 14 RH	AL	3	Black Diamond	QA2080X	48-816706A45	Flo-Torq Reflex
14-16 / 4.2-4.8	31-35 / 50-56	10 1/4 X 14 RH	AL	3	Black Diamond	QA2082X	48- 73138A45	Flo-Torq Reflex
13-15 / 3.9-4.5	34-39 / 55-63	10 1/8 X 15 RH	AL	3	Black Diamond	QA2084X	48- 73140A45	Flo-Torq Reflex
15-18 / 4.5-5.5	23-28 / 37-45	10.6X 12 RH	AL	4	Nemesis	48-8M8027511	48-8M8026625	Flo-Torq Reflex
14-18 / 4.2-5.5	27-32 / 44-52	10.3 X 13 RH	AL	4	Nemesis	48-8M8027512	48-8M8026630	Flo-Torq Reflex
14-16 / 4.2-4.8	31-35 / 50-56	10.1 X 14 RH	AL	4	Nemesis	48-8M8027513	48-8M8026635	Flo-Torq Reflex
13-15 / 3.9-4.5	34-39 / 55-63	10.1 X 15 RH	AL	4	Nemesis	48-8M8027514	48-8M8026640	Flo-Torq Reflex
15-18 / 4.5-5.5	23-28 / 37-45	11 X 12 RH	SS	3	Silverado	QS5164X	48-855856A46	Flo-Torq Reflex
14-18 / 4.2-5.5	27-32 / 44-52	10 1/2 X 13 RH	SS	3	Silverado	QS5166X	48-855858A46	Flo-Torq Reflex
14-16 / 4.2-4.8	31-35 / 50-56	10 3/8 X 14 RH	SS	3	Silverado	QS5168X	48-855860A46	Flo-Torq Reflex
to 15 / to 4.5	34-39 / 55-63	10 1/4 X 15 RH	SS	3	Silverado	QS5170X	48-855862A46	Flo-Torq Reflex

40-60 Hp CT/Bigfoot, 70-140 Hp Standard Gearcase

650 Model (4 cyl.) 1961-70, 650 Model (2 cyl.) thru 1971
900 to 1500 Models thru 1977, 60 HP Seapro/Marathon All Years
70 HP 1987-89, 75 HP 2 & 4 Strokes 1984 & Newer
75 HP SeaPro/Marathon All Years, 80 HP Mariner 1977
80 HP 1978-89, 90 HP 2 & 4-Strokes 1978 and Newer
100 HP 1988-99, 115 HP 2 & 4 Strokes 1978 and Newer
125 HP 1994 and Newer, 140 HP 1978-81
40 HP-60 HP CT/Bigfoot All Years
15 Tooth Spline

With stainless props use the Flo-Torq III hub kit 835257A9

Length (ft/m)	Current MPH/KPH	Propeller Size	Matl	Blades	Style	Quicksilver P/N	OEM P/N	Hub System
House/Work	to 14 / to 23	14 X 9 RH	AL	3	Black Diamond	QA2026X		(1)
Work/Pontoon	to 19 / to 31	14 X 10 RH	AL	3	Black Diamond	QA2028X		(1)
Pontoon	to 19 / to 31	14 X 10 RH	AL	3	Black Diamond	QA2828X		(1)(2)
23' + / 7.0+	to 21 / to 34	14 X 11 RH	AL	3	Black Diamond	QA2030X	48- 77338A45	(1)
Pontoon	to 21 / to 34	14 X 11 RH	AL	3	Black Diamond	QA2830X	48- 77338CP1	(1)(2)
20' + / 6.1+	19-27 / 31-44	14 X 13 RH	AL	3	Black Diamond	QA2032X	48- 77340A45	(1)
Pontoon	19-27 / 31-44	14 X 13 RH	AL	3	Black Diamond	QA2832X	48- 77340CP1	(1)(2)
18-20 / 5.5-6.1	25-32 / 40-52	13 3/4 X 15 RH	AL	3	Black Diamond	QA2034X	48- 77342A45	(1)
17-19 / 5.2-5.8	30-38 / 48-61	13 1/4 X 17 RH	AL	3	Black Diamond	QA2036X	48- 77344A45	(1)
15-18 / 4.5-5.5	35-41 / 56-66	13 X 19 RH	AL	3	Black Diamond	QA2038X	48- 77346A45	(1)
14-17 / 4.2-5.2	39-46 / 63-74	12 3/4 X 21 RH	AL	3	Black Diamond	QA2040X	48- 77348A45	(1)
to 16 / to 4.8	44-50 / 71-81	12 1/2 X 23 RH	AL	3	Black Diamond	QA2042X	48- 77350A45	(1)
Pontoon	to 19 / to 31	13.8 X 10 RH	AL	4	Nemesis Pontoon	48-8M8027497	48-8M8026555	(1)
Pontoon	to 21 / to 34	13.8 X 11 RH	AL	4	Nemesis Pontoon	48-8M8027498	48-8M8026560	(1)
Pontoon	to 21 / to 34	13.8 X 13 RH	AL	4	Nemesis Pontoon	48-8M8027500	48-8M8026570	(1)
18-20 / 5.5-6.1	25-32 / 40-52	13.4 X 15 RH	AL	4	Nemesis	48-8M8027502	48-8M8026580	(1)
17-19 / 5.2-5.8	31-39 / 48-61	13.0 X 17 RH	AL	4	Nemesis	48-8M8027504	48-8M8026590	(1)
15-18 / 4.5-5.5	35-43 / 56-66	12.5 X 19 RH	AL	4	Nemesis	48-8M8027506	48-8M8026600	(1)
23-26 / 7.0-7.8	25-29 / 42-47	14 X 10 RH	SS	3	Silverado	48-8M0055292	48- 17310A46	(1)
21-25 / 6.4-7.8	27-31 / 45-50	14 X 12 RH	SS	3	Silverado	48-8M0055293	48- 17312A46	(1)
18-20 / 5.5-6.1	25-32 / 40-52	13 3/8 X 14 RH	SS	3	Silverado	QS5114X	48- 17314A46	(1)
17-19 / 5.2-5.8	30-38 / 48-61	13 1/8 X 16 RH	SS	3	Silverado	QS5116X	48- 16986A46	(1)
15-18 / 4.5-5.5	35-41 / 56-66	13 X 18 RH	SS	3	Silverado	QS5118X	48- 16988A46	(1)

(1) For 2-stroke carb applications use Flo-Torq II attaching hardware kit 835257Q1. For 4-stroke and Opti-Max applications use Flo-Torq III attaching hardware kit 835257Q9 to reduce rattle. Purchase separately.

(2) Extra Cup Version.

90CT-400 Horsepower - Mercury/Mariner

90, 115HP Command Thrust 2014 & Newer
135 HP 1987 & Newer, 150 HP 1978 & Newer
175 HP 1978 & Newer, 200 HP 1978 & Newer
220 HP 1987-88, 225 HP 1980 & Newer
225 HP SeaPro/Marathon All Years
250-400 HP 2 and 4-Stroke 1990 and Newer
15 Tooth Spline

Use hub kit P/N 835257Q 1 for 90/115 CT and 150-300 HP 2 & 4 Strokes 1990 & Newer (Purchase separately)

Use hub kit P/N 840389Q06 Verado for 350, 350SCI and 400R outboards (Purchase separately)

Length (ft/m)	Current MPH/KPH	Propeller Size	Matl	Blades	Style	Quicksilver P/N	OEM P/N	Hub System
Pontoon	to 26 / to 42	14 X 12 RH	AL	4	Nemesis	48-8M0055531	48-8M0084491	(2)
Pontoon	to 29 / to 46	14 X 14 RH	AL	4	Nemesis	48-8M0055533	48-8M0084493	(2)
21-25 / 6.4-7.8	36-44 / 58-71	14 X 17 RH	AL	4	Nemesis	48-8M0055534	48-8M0084494	(2)
19-23 / 5.8-7.0	42-50 / 68-81	14 X 19 RH	AL	4	Nemesis	48-8M0055535	48-8M0084495	(2)
18-22 / 5.5-6.7	47-56 / 76-90	14 X 21 RH	AL	4	Nemesis	48-8M0055536	48-8M0084496	(2)

QUICKSILVER PROPELLER APPLICATION CHARTS

Length (ft/m)	Current MPH/KPH	Propeller Size	Matl	Blades	Style	Quicksilver P/N	OEM P/N	Hub System
17-20 / 5.2-6.1	53-61 / 85-98	14 X 23 RH	AL	4	Nemesis	48-8M0055537	48-8M0084497	(2)
House/Work	to 24 / to 39	16 X 11 RH	AL	3	Black Diamond	QA2000X	48- 78112A45	(2)
25-30 / 7.8-9.1	23-32 / 37-52	16 X 13 RH	AL	3	Black Diamond	QA2004X	48- 78114A45	(2)
23-29 / 7.0-8.8	27-35 / 44-56	16 X 14 RH	AL	3	Black Diamond	QA2006X	48- 16438A45	(2)
22-27 / 6.7-8.2	30-38 / 48-61	15 1/2 X 15 RH	AL	3	Black Diamond	QA2008X	48- 78116A45	(2)
23-26 / 7.0-7.8	33-40 / 53-65	16 X 16 RH	AL	3	Black Diamond	QA2010X	48- 16440A45	(2)
21-25 / 6.4-7.8	36-44 / 58-71	15 X 17 RH	AL	3	Black Diamond	QA1912X	48-832828A45	(2)
20-24 / 6.1-7.3	39-47 / 63-76	15 1/2 X 18 RH	AL	3	Black Diamond	QA2014X	48- 11324A45	(2)
19-23 / 5.8-7.0	42-50 / 68-81	14 1/2 X 19 RH	AL	3	Black Diamond	QA1916X	48-832830A45	(2)
18-22 / 5.5-6.7	47-56 / 76-90	14 1/4 X 21 RH	AL	3	Black Diamond	QA1918X	48-832832A45	(2)
17-20 / 5.2-6.1	53-61 / 85-98	14 X 23 RH	AL	3	Black Diamond	QA1920X	48-832834A45	(2)
21-25 / 6.4-7.8	36-44 / 58-71	15 X 16 RH	AL	4	Diamond 4	QA2182X	48-834850A45	(2)
19-23 / 5.8-7.0	42-50 / 68-81	14 1/2 X 18 RH	AL	4	Diamond 4	QA2184X	48-834852A45	(2)
18-22 / 5.5-6.7	47-56 / 76-90	14 X 20 RH	AL	4	Diamond 4	QA2186X	48-834854A45	(2)
23-27 / 6.7-8.2	30-38 / 48-61	14 1/2 X 15 RH	SS	3	Silverado	QS5050X	48- 16312A46	(2)
21-25 / 6.4-7.8	36-44 / 58-71	14 1/2 X 17 RH	SS	3	Silverado	QS5052X	48- 16314A46	(2)
19-23 / 5.8-7.0	42-50 / 68-81	14 X 19 RH	SS	3	Silverado	QS5054X	48- 16316A46	(2)
18-22 / 5.5-6.7	47-56 / 76-90	13 3/4 X 21 RH	SS	3	Silverado	QS5056X	48- 16318A46	(2)
21-25 / 6.4-7.8	36-44 / 58-71	13 1/2 X17 RH	SS	5	QST 5	QS1154X	48-821154A46	(2)
19-23 / 5.8-7.0	42-50 / 68-81	13 1/3 X 19 RH	SS	5	QST 5	QS5758X	48-815758A46	(2)
18-22 / 5.5-6.7	47-56 / 76-90	13 1/3 X 21 RH	SS	5	QST 5	QS5760X	48-815760A46	(2)
23-27 / 6.7-8.2	30-38 / 48-61	15 3/4 X 15 RH	SS	3	Thunderbolt	QS5002X	48- 19838A46	(2)
21-25 / 6.4-7.8	36-44 / 58-71	15 1/2 X 17 RH	SS	3	Thunderbolt	QS5004X	48- 18278A46	(2)
20-23 / 6.1-7.0	42-50 / 68-81	15 1/4 X 19 RH	SS	3	Thunderbolt	QS5006X	48- 13700A46	(2)
19-23 / 5.8-6.7	47-56 / 76-90	14 3/4 X 21 RH	SS	3	Thunderbolt	QS5008X	48- 13702A46	(2)
18-22 / 5.5-6.7	47-56 / 76-90	14 5/8 X 21 RH	SS	3	Torrent	QS5862X	48-825862A47	(2)(3)
17-20 / 5.2-6.1	53-61 / 85-98	14 5/8 X 23 RH	SS	3	Torrent	QS5864X	48-825864A47	(2)(3)
to 19 / to 5.8	59-69 / 95-111	14 5/8 X 25 RH	SS	3	Torrent	QS5866X	48-825866A47	(2)(3)
Pontoon	10-25 / 16-40	16 X 11P RH	SS	3	Q3	48-8M0103516	48-8M0070079	(2)
Pontoon	11-26 / 17-41	15.6 X 13P RH	SS	3	Q3	48-8M0103517	48-8M0070074	(2)
Pontoon	12-27 / 18-42	15.3 X 14P RH	SS	3	Q3	48-8M0103518	48-898988A46	(2)
Pontoon	17-30 / 27-49	15 X 15P RH	SS	3	Q3	48-8M0103519	48-898990A46	(2)
21-26 / 6.4-7.8	24-36 / 39-58	14.7 X 16P RH	SS	3	Q3	48-8M0103520	48-898992A46	(2)
21-26 / 6.4-7.8	30-42 / 48-68	14.5 X 17P RH	SS	3	Q3	48-8M0103521	48-898994A46	(2)
19-22 / 5.8-6.7	33-45 / 53-73	14.2 X 18P RH	SS	3	Q3	48-8M0103522	48-898996A46	(2)
19-22 / 5.8-6.7	36-49 / 58-79	14 X 19P RH	SS	3	Q3	48-8M0103523	48-898998A46	(2)
17-20 / 5.2-6.1	39-52 / 63-84	13.8 X 20P RH	SS	3	Q3	48-8M0103524	48-899000A46	(2)
17-20 / 5.2-6.1	42-56 / 68-90	13.6 X 21P RH	SS	3	Q3	48-8M0103525	48-899002A46	(2)
21-26 / 6.4-7.8	30-42 / 48-68	14.6 X 17P RH	SS	4	Q4	48-8M0103526	48-857024A46	(2)(3)
19-22 / 5.8-6.7	36-49 / 58-79	14.6 X 19P RH	SS	4	Q4	48-8M0103528	48-857026A46	(2)(3)
17-20 / 5.2-6.1	42-56 / 68-90	14.6 X 21P RH	SS	4	Q4	48-8M0103530	48-857028A46	(2)(3)
15-19 / 4.5-5.8	50-64 / 81-103	14.6 X 23P RH	SS	4	Q4	48-8M0103532	48-857030A46	(2)(3)
LH Propellers (1)		15 X 16 LH	AL	4	Diamond 4	QA2183X	48-834851A45	(2)
		14 1/2 X 18 LH	AL	4	Diamond 4	QA2185X	48-834853A45	(2)
		14 X 20 LH	AL	4	Diamond 4	QA2187X	48-834855A45	(2)
		15 3/4 X 15 LH	SS	3	Thunderbolt	QS5003X	48- 19841A46	(2)
		15 1/2 X 17 LH	SS	3	Thunderbolt	QS5005X	48- 90159A46	(2)
		15 1/4 X 19 LH	SS	3	Thunderbolt	QS5007X	48- 13701A46	(2)
		14 3/4 X 21 LH	SS	3	Thunderbolt	QS5009X	48- 13703A46	(2)(3)
		14.6 X 17P LH	SS	4	Q4	48-8M0103527	48-857025A46	(2)(3)
		14.6 X 19P LH	SS	4	Q4	48-8M0103529	48-857027A46	(2)(3)

Length (ft/m)	Current MPH/KPH	Propeller Size	Matl	Blades	Style	Quicksilver P/N	OEM P/N	Hub System
		14.6 X 21P LH	SS	4	Q4	48-8M0103531	48-857029A46	(2)(3)
		14.6 X 23P LH	SS	4	Q4	48-8M0103533	48-857031A46	(2)(3)

(2) Use Flo-Torq II attaching hardware kit 835257Q1. For Verado 4 cyl 135-200 HP use Flo-Torq II attaching hardware kit 835257Q10. For Verado 350, 350 SCI and 400R use Flo-Torq II attaching hardware kit 840389Q06. Purchase separately.

(3) Use Flo-Torq hub kit 835257Q6 for surface piercing applications with Torrent and Q4 propellers. Purchase separately.

SUZUKI OUTBOARD APPLICATION CHARTS

8-15 Horsepower - Suzuki

DF 8 HP 2010 & Newer
DT 9.9 HP 1983-87
DF 9.9 HP 1997 & Newer
DT 15 HP 1983-88
DT 15C HP 1989-97
DF 15 HP 1997 & Newer
10 Tooth Spline

Length (ft/m)	Current MPH/KPH	Propeller Size	Matl	Blades	Style	Quicksilver P/N	OEM P/N	Hub System
14-19 / 4.2-5.8	19-24 / 31-39	9 1/4 X 10 RH	AL	3	Black Diamond	QA2270R	58100-93773-09	Rubber Bushing
14-16 / 4.2-4.8	21-26 / 34-42	9 1/4 X 11 RH	AL	3	Black Diamond	QA2274R	58100-93743-019	Rubber Bushing

25-30 Horsepower - Suzuki

DT20 & 25 HP 1987-88
DT20 & 25 HP 1983-86
DF25 HP 1989 & Newer
DT25C HP 1989-2000
DF30 HP 2000 & Newer
DT30 HP 1983-86
DT30, 30C HP 1987-97
10 Tooth Spline

Use Suzuki OEM stopper Part No. 57632-96400 on DT20/25 1983-86 & DT30 1983-86.

Length (ft/m)	Current MPH/KPH	Propeller Size	Matl	Blades	Style	Quicksilver P/N	OEM P/N	Hub System
20+ / 6.1+	to 16 / to 26	11 X 9 RH	AL	3	Black Diamond	QA2242R	58100-96370-019	Rubber Bushing
17-20 / 5.2-6.1	10-20 / 16-32	10.5 X 11 RH	AL	3	Black Diamond	QA2248R	58100-96420-019	Rubber Bushing

35-65 Horsepower - Suzuki - Reflex Hub

DT35C HP 1987-90
DT40, DF40 HP 1983 & Newer
DF 50 1999 and Newer
DT50,50M HP 1983-84
DT55 HP 1985-97
DT60 HP 1983-84
DT65 HP 1985-97
13 Tooth Spline
Flo-Torq Reflex Propeller.
Replace existing forward and aft washer with Quicksilver kit 8M0088039. Purchase separately.

Length (ft/m)	Current MPH/KPH	Propeller Size	Matl	Blades	Style	Quicksilver P/N	Hub System
20'+ / 6.1+	to 14 / to 23	12 1/2 X 8 RH	AL	3	Black Diamond	QA2060X	Flo-Torq Reflex(1)
19-21 / 5.8-6.4	13-18 / 21-29	12 1/4 X 9 RH	AL	3	Black Diamond	QA2062X	Flo-Torq Reflex(1)
17-20 / 5.2-6.1	18-22 / 29-35	11 1/4 X 10 RH	AL	3	Black Diamond	QA2064X	Flo-Torq Reflex(1)
15-18 / 4.5-5.5	23-28 / 37-45	10 3/4 X 12 RH	AL	3	Black Diamond	QA2072X	Flo-Torq Reflex(1)
14-18 / 4.2-5.5	27-32 / 44-52	10 1/2 X 13 RH	AL	3	Black Diamond	QA2076X	Flo-Torq Reflex(1)
14-18 / 4.2-5.5	27-32 / 44-52	10 3/8 X 13 RH	AL	3	Black Diamond	QA2078X	Flo-Torq Reflex(1)
14-16 / 4.2-4.8	31-35 / 50-56	10 3/8 X 14 RH	AL	3	Black Diamond	QA2080X	Flo-Torq Reflex(1)

QUICKSILVER PROPELLER APPLICATION CHARTS

Length (ft/m)	Current MPH/KPH	Propeller Size	Matl	Blades	Style	Quicksilver P/N	Hub System
14-16 / 4.2-4.8	31-35 / 50-56	10 1/4 X 14 RH	AL	3	Black Diamond	QA2082X	Flo-Torq Reflex(1)
13-15 / 3.9-4.5	34-39 / 55-63	10 1/8 X 15 RH	AL	3	Black Diamond	QA2084X	Flo-Torq Reflex(1)
15-18 / 4.5-5.5	23-28 / 37-45	10.6 X 12 RH	AL	4	Nemesis	48-8M8027511	Flo-Torq Reflex(1)
14-18 / 4.2-5.5	27-32 / 44-52	10.3 X 13 RH	AL	4	Nemesis	48-8M8027512	Flo-Torq Reflex(1)
14-16 / 4.2-4.8	31-35 / 50-56	10.1 X 14 RH	AL	4	Nemesis	48-8M8027513	Flo-Torq Reflex(1)
13-15 / 3.9-4.5	34-39 / 55-63	10.1 X 15 RH	AL	4	Nemesis	48-8M8027514	Flo-Torq Reflex(1)
15-18 / 4.5-5.5	23-28 / 37-45	11 X 12 RH	SS	3	Silverado	QS5164X	Flo-Torq Reflex(1)
14-18 / 4.2-5.5	27-32 / 44-52	10 1/2 X 13 RH	SS	3	Silverado	QS5166X	Flo-Torq Reflex(1)
14-16 / 4.2-4.8	31-35 / 50-56	10 3/8 X 14 RH	SS	3	Silverado	QS5168X	Flo-Torq Reflex(1)
to 15 / to 4.5	34-39 / 55-63	10 1/4 X 15 RH	SS	3	Silverado	QS5170X	Flo-Torq Reflex(1)

(1) Replace existing forward and aft washer with Quicksilver kit 8M0088039. Purchase separately.

35-65 Horsepower - Suzuki - Rubber Hub

DT35C HP 1987-90
DT40, DF40 HP 1983 & Newer
DF 50 1999 and Newer
DT50,50M HP 1983-84
DT55 HP 1985-97
DT60 HP 1983-84
DT65 HP 1985-97
13 Tooth Spline

Length (ft/m)	Current MPH/KPH	Propeller Size	Matl	Blades	Style	Quicksilver P/N	OEM P/N	Hub System
16-19 / 4.8-5.8	21-25 / 34-40	11 1/2 X 11 RH	AL	3	Black Diamond	QA2226R	58100-95222-019	Rubber Bushing
14-18 / 4.3-5.5	27-32 / 44-52	11 1/2 X 13 RH	AL	3	Black Diamond	QA2078X	58100-94313-019	Rubber Bushing
14-16 / 4.3-4.8	31-35 / 50-56	11 1/2 X 14 RH	AL	3	Black Diamond		58100-95353-019	Rubber Bushing
13-15 / 3.9-4.5	34-39 / 55-63	11 1/2 X 15 RH	AL	3	Black Diamond	QA2234R	58100-95363-019	Rubber Bushing
to 15 / to 4.5	35-47 / 56-76	11 1/2 X 17 RH	AL	3	Black Diamond		58100-95382-019	Rubber Bushing

60-70 Hp (4-Stroke), 75-140 Hp (2-Stroke) - Suzuki

DF60 HP 1998 & Newer
DF70 HP 1998-2008
DT75 HP 1992-97
DT75 HP 1983-91
DT85 HP 1992-2000
DT85 HP 1979-91
DT90 HP 1989-97
DT100 HP 1989 and Newer
DT115, 140 HP 1992 & Newer
DT115, 140 HP 1981-91
13 Tooth Spline

Length (ft/m)	Current MPH/KPH	Propeller Size	Matl	Blades	Style	Quicksilver P/N	OEM P/N	Hub System
Pontoon	-	14 X 13 RH extra cup	AL	3	Black Diamond	QA3832X		(1)
18-20 / 5.5-6.1	25-32 / 40-52	13 3/4 X 15 RH	AL	3	Black Diamond	QA2208X	58100-95500-019	(1)
17-19 / 5.2-5.8	30-38 / 48-61	13 1/4 X 17 RH	AL	3	Black Diamond	QA2206X	58100-95511-019	(1)
17-19 / 5.2-5.8	30-38 / 48-61	13 1/8 X 16 RH	SS	3	Silverado	QS5136X	99105-00100-16P	(1)
15-18 / 4.5-5.5	35-41 / 56-66	13 X 18 RH	SS	3	Silverado	QS5138X	99105-00100-18P	(1)

(1) Use Flo-Torq II attaching hardware kit 835282Q1. Purchase separately.

70-140 Horsepower (4-Stroke) - Suzuki

DF 70-100 HP 2009 and Newer
DF 115-140 HP 2002 & Newer
15 Tooth Spline

Length (ft/m)	Current MPH/KPH	Propeller Size	Matl	Blades	Style	Quicksilver P/N	OEM P/N	Hub System
House/Work	to 14 / to 23	14 X 9 RH	AL	3	Black Diamond	QA2026X	854340A45	(1)(2)(3)(4)
Work/Pontoon	to 19 / to 31	14 X 10 RH	AL	3	Black Diamond	QA2028X	845342A45	(1)(2)(3)(4)
Pontoon	to 19 / to 31	14 X 10 RH	AL	3	Black Diamond	QA2828X	845342CP1	(1)(2)(3)(4)
23' + / 7.0+	to 21 / to 34	14 X 11 RH	AL	3	Black Diamond	QA2030X	77338A45	(1)(2)(3)(4)
Pontoon	to 21 / to 34	14 X 11 RH	AL	3	Black Diamond	QA2830X	77338CP1	(1)(2)(3)(4)
20' + / 6.1+	19-27 / 31-44	14 X 13 RH	AL	3	Black Diamond	QA2032X	77340A45	(1)(2)(3)(4)
Pontoon	19-27 / 31-44	14 X 13 RH	AL	3	Black Diamond	QA2832X	77340CP1	(1)(2)(3)(4)
18-20 / 5.5-6.1	25-32 / 40-52	13 3/4 X 15 RH	AL	3	Black Diamond	QA2034X	77342A45	(1)(2)(3)(4)
17-19 / 5.2-5.8	30-38 / 48-61	13 1/4 X 17 RH	AL	3	Black Diamond	QA2036X	77344A45	(1)(2)(3)(4)
15-18 / 4.5-5.5	35-41 / 56-66	13 X 19 RH	AL	3	Black Diamond	QA2038X	77346A45	(1)(2)(3)(4)
14-17 / 4.2-5.2	39-46 / 63-74	12 3/4 X 21 RH	AL	3	Black Diamond	QA2040X	77348A45	(1)(2)(3)(4)
to 16 / to 4.8	44-50 / 71-81	12 1/2 X 23 RH	AL	3	Black Diamond	QA2042X	77350A45	(1)(2)(3)(4)
Pontoon	to 19 / to 31	13.8 X 10 RH	AL	4	Nemesis Pontoon	48-8M8027497		(1)(2)(3)(4)
Pontoon	to 21 / to 34	13.8 X 11 RH	AL	4	Nemesis Pontoon	48-8M8027498		(1)(2)(3)(4)
Pontoon	19-27 / 31-44	13.8 X 13 RH	AL	4	Nemesis Pontoon	48-8M8027500		(1)(2)(3)(4)
18-20 / 5.5-6.1	25-32 / 40-52	13.4 X 15 RH	AL	4	Nemesis	48-8M8027502		(1)(2)(3)(4)
17-19 / 5.2-5.8	30-38 / 48-61	13.0 X 17 RH	AL	4	Nemesis	48-8M8027504		(1)(2)(3)(4)
15-18 / 4.5-5.5	35-41 / 56-66	12.5 X 19 RH	AL	4	Nemesis	48-8M8027506		(1)(2)(3)(4)
23-26 / 7.0-7.8	25-29 / 42-47	14 X 10 RH	SS	3	Silverado	48-8M0055292		(1)
21-25 / 6.4-7.8	27-31 / 45-50	14 X 12 RH	SS	3	Silverado	48-8M0055293		(1)
18-20 / 5.5-6.1	25-32 / 40-52	13 3/8 X 14 RH	SS	3	Silverado	QS5114X	17314A46	(1)(2)(3)(4)
17-19 / 5.2-5.8	30-38 / 48-61	13 1/8 X 16 RH	SS	3	Silverado	QS5116X	16986A46	(1)(2)(3)(4)
15-18 / 4.5-5.5	35-41 / 56-66	13 X 18 RH	SS	3	Silverado	QS5118X	16988A46	(1)(2)(3)(4)

(1) For 90-115HP 2001 - 2008 use Flo-Torq II attaching hardware kit 835283Q 1

(2) For 100-115HP 2009 and newer use Flo-Torq II attaching hardware kit 835283Q 2

(3) For 140HP use Flo-Torq II attaching hardware kit 835283Q 2

(4) For 70-90HP 2009 and newer use Flo-Torq II attaching hardware kit 835283Q03

150-300 Horsepower - Suzuki

DT150/150S HP 1986 & Newer
DT175 HP 1986-92
DT200 HP 1986-2000
DT225 HP 1990 & Newer
DF150- DF300 All Years
15 Tooth Spline

Length (ft/m)	Current MPH/KPH	Propeller Size	Matl	Blades	Style	Quicksilver P/N	OEM P/N	Hub System
Pontoon	to 26 / to 42	14 X 12 RH	AL	4	Nemesis	48-8M0055531		(2)
Pontoon	to 29 / to 46	14 X 14 RH	AL	4	Nemesis	48-8M0055533		(2)
21-25 / 6.4-7.8	36-44 / 58-71	14 X 17 RH	AL	4	Nemesis	48-8M0055534		(2)
19-23 / 5.8-7.0	42-50 / 68-81	14 X 19 RH	AL	4	Nemesis	48-8M0055535		(2)
18-22 / 5.5-6.7	47-56 / 76-90	14 X 21 RH	AL	4	Nemesis	48-8M0055536		(2)
17-20 / 5.2-6.1	53-61 / 85-98	14 X 23 RH	AL	4	Nemesis	48-8M0055537		(2)
22-27 / 6.7-8.2	30-38 / 48-61	15 1/2 X 15 RH	AL	3	Black Diamond	QA2008X		(2)
21-25 / 6.4-7.8	36-44 / 58-71	15 X 17 RH	AL	3	Black Diamond	QA1912X		(2)
19-23 / 5.8-7.0	42-50 / 68-81	14 1/2 X 19 RH	AL	3	Black Diamond	QA1916X		(2)
18-22 / 5.5-6.7	47-56 / 76-90	14 1/4 X 21 RH	AL	3	Black Diamond	QA1918X		(2)
17-20 / 5.2-6.1	53-61 / 85-98	14 X 23 RH	AL	3	Black Diamond	QA1920X		(2)
21-25 / 6.4-7.8	36-44 / 58-71	15 X 16 RH	AL	4	Diamond 4	QA2182X		(2)
19-23 / 5.8-7.0	42-50 / 68-81	14 1/2 X 18 RH	AL	4	Diamond 4	QA2184X		(2)

QUICKSILVER PROPELLER APPLICATION CHARTS

Length (ft/m)	Current MPH/KPH	Propeller Size	Matl	Blades	Style	Quicksilver P/N	OEM P/N	Hub System
18-22 / 5.5-6.7	47-56 / 76-90	14 X 20 RH	AL	4	Diamond 4	QA2186X		(2)
22-27 / 6.7-8.2	30-38 / 48-61	14 1/2 X 15 RH	SS	3	Silverado	QS5050X	99105-00200-16P	(2)
21-25 / 6.4-7.8	36-44 / 58-71	14 1/2 X 17 RH	SS	3	Silverado	QS5052X	99105-00200-18P	(2)
19-23 / 5.8-7.0	42-50 / 68-81	14 X 19 RH	SS	3	Silverado	QS5054X		(2)
18-22 / 5.5-6.7	47-56 / 76-90	13 3/4 X 21 RH	SS	3	Silverado	QS5056X		(2)
21-25 / 6.4-7.8	36-44 / 58-71	13 1/2 X 17	SS	5	QST 5	QS1154X		(2)
19-23 / 5.8-7.0	42-50 / 68-81	13 1/3 X 19	SS	5	QST 5	QS5758X		(2)
18-22 / 5.5-6.7	47-56 / 76-90	13 1/3 X 21	SS	5	QST 5	QS5866X		(2)
22-27 / 6.7-8.2	30-38 / 48-61	15 3/4 X 15 RH	SS	3	Thunderbolt	QS5002X		(2)
21-25 / 6.4-7.8	36-44 / 58-71	15 1/2 X 17 RH	SS	3	Thunderbolt	QS5004X		(2)
19-23 / 5.8-7.0	42-50 / 68-81	15 1/4 X 19 RH	SS	3	Thunderbolt	QS5006X		(2)
18-22 / 5.5-6.7	47-56 / 76-90	14 3/4 X 21 RH	SS	3	Thunderbolt	QS5008X		(2)
18-22 / 5.5-6.7	47-56 / 76-90	14 5/8 X 21 RH	SS	3	Torrent	QS5862X		(2)(3)
17-20 / 5.2-6.1	53-61 / 85-98	14 5/8 X 23 RH	SS	3	Torrent	QS5864X		(2)(3)
to 19 / to 5.8	59-69 / 95-111	14 5/8 X 25 RH	SS	3	Torrent	QS5866X		(2)(3)
Pontoon	10-25 / 16-40	16 X 11P RH	SS	3	Q3	48-8M0103516		(2)
Pontoon	11-26 / 17-41	15.6 X 13P RH	SS	3	Q3	48-8M0103517		(2)
Pontoon	12-27 / 18-42	15.3 X 14P RH	SS	3	Q3	48-8M0103518		(2)
Pontoon/Cruiser	17-30 / 27-49	15 X 15P RH	SS	3	Q3	48-8M0103519		(2)
21-26 / 6.4-7.8	24-36 / 39-58	14.7 X 16P RH	SS	3	Q3	48-8M0103520		(2)
21-26 / 6.4-7.8	30-42 / 48-68	14.5 X 17P RH	SS	3	Q3	48-8M0103521		(2)
19-22 / 5.8-6.7	33-45 / 53-73	14.2 X 18P RH	SS	3	Q3	48-8M0103522		(2)
19-22 / 5.8-6.7	36-49 / 58-79	14 X 19P RH	SS	3	Q3	48-8M0103523		(2)
17-20 / 5.2-6.1	39-52 / 63-84	13.8 X 20P RH	SS	3	Q3	48-8M0103524		(2)
17-20 / 5.2-6.1	42-56 / 68-90	13.6 X 21P RH	SS	3	Q3	48-8M0103525		(2)
21-26 / 6.4-7.8	30-42 / 48-68	14.6 X 17P RH	SS	4	Q4	48-8M0103526		(2)
19-22 / 5.8-6.7	36-49 / 58-79	14.6 X 19P RH	SS	4	Q4	48-8M0103528		(2)
17-20 / 5.2-6.1	42-56 / 68-90	14.6 X 21P RH	SS	4	Q4	48-8M0103530		(2)
15-19 / 4.5-5.8	50-64 / 81-103	14.6 X 23P RH	SS	4	Q4	48-8M0103532		(2)
LH Propellers (1)								
		15 X 16 LH	AL	4	Diamond 4	QA2183X		(2)
		14 1/2 X 18 LH	AL	4	Diamond 4	QA2185X		(2)
		14 X 20 LH	AL	4	Diamond 4	QA2187X		(2)
		15 3/4 X 15 LH	SS	3	Thunderbolt	QS5003X		(2)(3)
		15 1/2 X 17 LH	SS	3	Thunderbolt	QS5005X		(2)
		15 1/4 X 19 LH	SS	3	Thunderbolt	QS5007X		(2)
		14 3/4 X 21 LH	SS	3	Thunderbolt	QS5009X		(2)(3)
		14.6 X 17 LH	SS	4	Q4	48-8M0103527		(2)(3)
		14.6 X 19 LH	SS	4	Q4	48-8M0103529		(2)(3)
		14.6 X 21 LH	SS	4	Q4	48-8M0103531		(2)(3)
		14.6 X 23 LH	SS	4	Q4	48-8M0103533		(2)(3)

(2) Use Flo-Torq II attaching hardware kit 835281Q1. Purchase separately.

(3) Use forward bushing 23-856163Q1 along with Flo-Torq hub kit for surface piercing applications with Torrent propellers. Purchase separately.

TOHATSU/NISSAN OUTBOARD APPLICATION CHARTS

2.5 -3.5 Horsepower - Tohatsu/Nissan

2.5 - 3.5 Horsepower
2.5 HP 1990 & Newer
3 HP 1990 - 1992
3.3 HP 1993 & Newer
Pin Drive

Length (ft/m)	Propeller Size	Matl	Blades	Style	Quicksilver P/N	OEM P/N	Hub System
All Purpose	7.4 X 6 RH	Plastic	3	Black Diamond	48-8M0081592	48-815083A01	Pin Drive
All Purpose	7.4 X 7 RH	Plastic	3	Black Diamond		48-815083A02	Pin Drive

4-6 Horsepower - Tohatsu/Nissan

4 -6 Horspower
4 - 5 HP 2-Stroke 1987 & Newer
4, 5, 6 HP -Stroke 1999 & Newer
12 Tooth Spline

Length (ft/m)	Propeller Size	Matl	Blades	Style	Quicksilver P/N	OEM P/N	Hub System
All Purpose	7.8 X 9 RH	AL	3	Black Diamond	48-8M0081239		Rubber Bushing
All Purpose	7.8 X 7 RH	AL	3	Black Diamond	QA3182R	48-812949A02(1)	Rubber Bushing
All Purpose	7.8 X 8 RH	AL	3	Black Diamond	QA3184R	48-812950A02(2)	Rubber Bushing
All Purpose	7.9 X 6 RH	AL	3	Black Diamond	48-8M0081238	48-8M0081143	Rubber Bushing

(1) Standard with 4 Hp, 2-Stroke and FourStroke

(2) Standard with 5 and 6 Hp FourStroke

8/9.9 Horsepower (4-Stroke) - Tohatsu/Nissan

8/9.9 (4-Stroke)
12 Tooth Spline

Length (ft/m)	Current MPH/KPH	Propeller Size	Material	Blades	Style	Quicksilver P/N	OEM P/N	Hub System
Kicker		8.7 x 5 RH	Alum	4	Black Diamond	QA2148R	48-812954A10	Rubber Bushing
16 + / 4.8 +	to 12 / to 19	8.9 x 6.5 RH	Alum	3	Black Diamond	QA2150R	48-897610A10	Rubber Bushing
14-17 / 4.2-5.2	8-17 / 14-27	8.9 x 7.5 RH	Alum	3	Black Diamond	QA2154R	48-897614A10(1)	Rubber Bushing
13-16 / 3.9-4.8	12-21 / 19-34	8.9 x 8.5 RH	Alum	3	Black Diamond	QA2158R	48-897618A10(2)	Rubber Bushing

(1) Standard with 8 Hp FourStroke

(2) Standard with 9.9 Hp FourStroke

9.9-20 Horsepower Tohatsu/Nissan

9.9 HP 1984 and Newer
9.9 HP 4-Stroke 2000 and Newer
12 HP 1985-1988
15 HP 4-Stroke 2000 and Newer
15/18 HP 1995 and Newer
18/20 HP 4-Stroke 2001 and Newer
14 Tooth Spline

Length	Current MPH/KPH	Propeller Size	Material	Blades	Style	Quicksilver P/N	Hub System
Kicker		10 x 5	AL	4	Black Diamond	QA2178R	Rubber Hub
15-19 / 4.6-5.8	5-12 / 8-19	9 1/2 X 8 RH	AL	3	Black Diamond	QA2171R	Rubber Hub
14-17 / 4.3-5.2	10-16 / 16-26	9 1/4 X 9 RH	AL	3	Black Diamond	QA2173R	Rubber Hub
to 16 / to 4.9	13-20 / 21-32	9 1/4 X 10 RH	AL	3	Black Diamond	QA2175R	Rubber Hub

QUICKSILVER PROPELLER APPLICATION CHARTS

25-30 Horsepower 4-Stroke - Totahsu/Nissan

25 HP 1986 and Newer
30 HP 1985 and Newer
10 Tooth Spline

Length (ft/m)	Current MPH/KPH	Propeller Size	Material	Blades	Style	Quicksilver P/N	Hub System
16+ / 4.8+	to 20 / to 32	10 x 8 RH	Alum	3	Black Diamond	QA2190R	Rubber Bushing
13-17 / 3.9-5.2	17-26 / 27-42	9-3/4 x 9-1/2 RH	Alum	3	Black Diamond	QA2192R	Rubber Bushing
13-16 / 3.9-4.8	21-31 / 34-47	9-1/2 x 11 RH	Alum	3	Black Diamond	QA2196R	Rubber Bushing
to 16 / to 4.8	25-36 / 40-58	9-1/4 x 12-1/2 RH	Alum	3	Black Diamond	QA2200R	Rubber Bushing
13-17 / 3.9-5.2	17-26 / 27-42	9.3 x 9.5 RH	Alum	4	Nemesis	48-8M8027516	Rubber Bushing
13-16 / 3.9-4.8	21-31 / 34-47	9.3 X 11 RH	Alum	4	Nemesis	48-8M8027517	Rubber Bushing

35-50 Hp Tohatsu/Nissan

35 HP (35B Only) 1984 and Earlier
50 HP (50D Only) 1991
40 HP 1984 and Newer
50 HP 1992 and Newer
13 Tooth Spline
Flo-Torq Reflex Propeller. Replace existing forward and aft washer with Quicksilver kit 8M0053074. Purchase separately.

Length (ft/m)	Current MPH/KPH	Propeller Size	Matl	Blades	Style	Quicksilver P/N	Hub System
20'+ / 6.1+	to 14 / to 23	12 1/2 X 8 RH	AL	3	Black Diamond	QA2060X	Flo-Torq Reflex(1)
19-21 / 5.8-6.4	13-18 / 21-29	12 1/4 X 9 RH	AL	3	Black Diamond	QA2062X	Flo-Torq Reflex(1)
17-20 / 5.2-6.1	18-22 / 29-35	11 1/4 X 10 RH	AL	3	Black Diamond	QA2064X	Flo-Torq Reflex(1)
16-19 / 4.8-5.8	21-25 / 34-41	10 7/8 X 11 RH	AL	3	Black Diamond	QA2070X	Flo-Torq Reflex(1)
15-18 / 4.5-5.5	23-28 / 37-45	10 3/4 X 12 RH	AL	3	Black Diamond	QA2072X	Flo-Torq Reflex(1)
15-18 / 4.5-5.5	23-28 / 37-45	10 5/8 X 12 RH	AL	3	Black Diamond	QA2074X	Flo-Torq Reflex(1)
14-18 / 4.2-5.5	27-32 / 44-52	10 1/2 X 13 RH	AL	3	Black Diamond	QA2076X	Flo-Torq Reflex(1)
14-18 / 4.2-5.5	27-32 / 44-52	10 3/8 X 13 RH	AL	3	Black Diamond	QA2078X	Flo-Torq Reflex(1)
14-16 / 4.2-4.8	31-35 / 50-56	10 3/8 X 14 RH	AL	3	Black Diamond	QA2080X	Flo-Torq Reflex(1)
14-16 / 4.2-4.8	31-35 / 50-56	10 1/4 X 14 RH	AL	3	Black Diamond	QA2082X	Flo-Torq Reflex(1)
13-15 / 3.9-4.5	34-39 / 55-63	10 1/8 X 15 RH	AL	3	Black Diamond	QA2084X	Flo-Torq Reflex(1)
15-18 / 4.5-5.5	23-28 / 37-45	10.6 X 12 RH	AL	4	Nemesis	48-8M8027511	Flo-Torq Reflex(1)
14-18 / 4.2-5.5	27-32 / 44-52	10.3 X 13 RH	AL	4	Nemesis	48-8M8027512	Flo-Torq Reflex(1)
14-16 / 4.2-4.8	31-35 / 50-56	10.1 X 14 RH	AL	4	Nemesis	48-8M8027513	Flo-Torq Reflex(1)
13-15 / 3.9-4.5	34-39 / 55-63	10.1 X 15 RH	AL	4	Nemesis	48-8M8027514	Flo-Torq Reflex(1)
15-18 / 4.5-5.5	23-28 / 37-45	11 X 12 RH	SS	3	Silverado	QS5164X	Flo-Torq Reflex(1)
14-18 / 4.2-5.5	27-32 / 44-52	10 1/2 X 13 RH	SS	3	Silverado	QS5166X	Flo-Torq Reflex(1)
14-16 / 4.2-4.8	31-35 / 50-56	10 3/8 X 14 RH	SS	3	Silverado	QS5168X	Flo-Torq Reflex(1)
to 15 / to 4.5	34-39 / 55-63	10 1/4 X 15 RH	SS	3	Silverado	QS5170X	Flo-Torq Reflex(1)

(1) Flo-Torq Reflex Propeller. Replace existing forward and aft washer with Quicksilver kit 8M0053074. Purchase separately.

70-140 Horsepower - Tohatsu/Nissan

70C HP 1996 & Newer
90 HP 1987 & Newer
115 HP 1992 & Newer
120 HP 1988 & Newer
140 HP 1988 & Newer

Length (ft/m)	Current MPH/KPH	Propeller Size	Matl	Blades	Style	Quicksilver P/N	OEM P/N	Hub System
House/Work	7-16 / 11-22	14 X 9 RH	AL	3	Black Diamond	QA2026X	3B764-5230M	(1)
Pontoon/Work	9-19 / 15-31	14 X 10 RH	AL	3	Black Diamond	QA2028X		(1)
Pontoon	9-19 / 15-31	14 X 10 RH	AL	3	Black Diamond	QA2828X		(1)(2)
House/Work	12-22 / 19-35	14 X 11 RH	AL	3	Black Diamond	QA2030X	3B764-5270M	(1)
Pontoon	12-22 / 19-35	14 X 11 RH	AL	3	Black Diamond	QA2830X		(1)(2)
22-29 / 6.7-8.8	14-28 / 23-45	14 X 13 RH	AL	3	Black Diamond	QA2032X	3B764-5320M	(1)
Pontoon	14-28 / 23-45	14 X 13 RH	AL	3	Black Diamond	QA2832X		(1)(2)

Length (ft/m)	Current MPH/KPH	Propeller Size	Matl	Blades	Style	Quicksilver P/N	OEM P/N	Hub System
21-26 / 6.4-7.8	24-36 / 39-58	13 3/4 X 15 RH	AL	3	Black Diamond	QA2034X	3B764-5360M	(1)
18-21 / 5.5-6.4	30-42 / 48-68	13 1/4 X 17 RH	AL	3	Black Diamond	QA2036X	3B764-5410M	(1)
17-20 / 5.2-6.1	38-50 / 61-81	13 X 19 RH	AL	3	Black Diamond	QA2038X	3B764-5451M	(1)
15-18 / 4.5-5.5	44-56 / 71-90	12 3/4 X 21 RH	AL	3	Black Diamond	QA2040X	3B764-5490M	(1)
15-17 / 4.5-5.2	48-62 / 77-100	12 1/2 X 23 RH	AL	3	Black Diamond	QA2042X		(1)
Pontoon	9-19 / 15-31	13.8 X 10 RH	AL	4	Nemesis Pontoon	48-8M8027497		(1)
Pontoon	12-22 / 19-35	13.8 X 11 RH	AL	4	Nemesis Pontoon	48-8M8027498		(1)
Pontoon	14-28 / 23-4	13.8 X 13 RH	AL	4	Nemesis Pontoon	48-8M8027500		(1)
21-26 / 6.4-7.8	24-36 / 39-58	13.4 X 15 RH	AL	4	Nemesis	48-8M8027502		(1)
18-21 / 5.5-6.4	30-42 / 48-68	13.0 X 17 RH	AL	4	Nemesis	48-8M8027504		(1)
17-20 / 5.2-6.1	38-50 / 61-81	12.5 X 19 RH	AL	4	Nemesis	48-8M8027506		(1)
23-26 / 7.0-7.8	25-29 / 42-47	14 X 10 RH	SS	3	Silverado	48-8M0055292		(1)
21-25 / 6.4-7.8	27-31 / 45-50	14 X 12 RH	SS	3	Silverado	48-8M0055292		(1)
21-26 / 6.4-7.9	24-36 / 39-58	13 3/8 X 14 RH	SS	3	Silverado	QS5114X		(1)
18-21 / 5.5-6.4	30-42 / 48-68	13 1/8 X 16 RH	SS	3	Silverado	QS5116X		(1)
17-20 / 5.2-6.1	38-50 / 61-81	13 X 18 RH	SS	3	Silverado	QS5118X		(1)

(1) Use Flo-Torq II attaching hardware kit 835284Q1. Purchase separately.

(2) Extra Cup Version.

YAMAHA OUTBOARD APPLICATION CHARTS

8 Horsepower - Yamaha

8 HP 1976-83
Pin Drive

Length (ft/m)	Current MPH/KPH	Propeller Size	Matl	Blades	Style	Quicksilver P/N	OEM P/N	Hub System
14-18 / 4.3-5.5	to 15 / to 24	8.25 X 7 RH	AL	3	Black Diamond	QA3178R		Rubber Bushing

9.9-20 Horsepower - Yamaha

9.9 HP 2-Stroke 1984 and Newer
F9.9 4-Stroke 2000-2007
15 HP 2-Stroke 1984 and Newer
F15 4-Stroke 2000 and Newer
F20 4-Stroke All Years
8 Tooth Spline

Length (ft/m)	Current MPH/KPH	Propeller Size	Matl	Blades	Style	Quicksilver P/N	OEM P/N	Hub System
14-19 / 4.3-5.8	19-24 / 31-39	9 1/4 X 9 RH	AL	3	Black Diamond	QA3906R	683-45945-00-EL	Rubber Bushing
14-16 / 4.3-4.8	23-27 / 37-44	9 1/4 X 10 RH	AL	3	Black Diamond	QA3914R	683-45943-00-EL	Rubber Bushing

15-28 Horsepower - Yamaha

15 HP 1976-83
W15 1976-83
20 HP 1976-78
25 HP 1977-79
28 HP 1976-78
Pin Drive

Length (ft/m)	Current MPH/KPH	Propeller Size	Matl	Blades	Style	Quicksilver P/N	OEM P/N	Hub System
12-16 / 3.6-4.8	20-28 / 32-45	9 X 10 RH	AL	3	Black Diamond	QA3150R	651-45947-00-36	Rubber Bushing
12-14 / 3.6-4.3	25-32 / 40-52	9 1/4 X 11 RH	AL	3	Black Diamond	QA3152R	653-45941-01-36	Rubber Bushing

QUICKSILVER PROPELLER APPLICATION CHARTS

20-30 Horsepower - Yamaha

20 HP 1996-97
25 HP 1980 and Newer
F25 4-Stroke 2000 and Newer
30 HP 1979 and Newer
F30 4-Stroke 2001 and Newer
10 Tooth Spline

Length (ft/m)	Current MPH/KPH	Propeller Size	Matl	Blades	Style	Quicksilver P/N	OEM P/N	Hub System
15-17 / 4.5-5.2	18-26 / 29-42	9 7/8 X 10 1/2 RH	AL	3	Black Diamond	QA3808R	664-45945-00-EL	Rubber Bushing
14-16 / 4.3-4.8	19-28 / 31-45	9 7/8 X 11 1/4 RH	AL	3	Black Diamond	QA3810R	664-45947-01-EL	Rubber Bushing

T25-60 Horsepower - Yamaha

T25 All Years
40 HP 1984 and Newer
F40 4-Stroke 1999 and Newer
48 HP 1995-2000
50 HP (Excluding T50) 1984 & Newer
F50 4-Stroke 1999 and Newer
55 HP 1976-95
60 HP 1976-91
F60 4-Stroke 2002 and Newer
13 Tooth Spline

Length (ft/m)	Current MPH/KPH	Propeller Size	Matl	Blades	Style	Quicksilver P/N	OEM P/N	Hub System
House/Work	to 16 / to 26	12 1/2 X 8 RH	AL	3	Black Diamond	QA2060X		(1)
18+ / 5.5+	16-20 / 26-32	12 1/4 X 9 RH	AL	3	Black Diamond	QA2062X	663-45956-01-EL	(1)
17+ / 5.2+	20-23 / 32-37	11 1/4 X 10 RH	AL	3	Black Diamond	QA2064X	6H5-45952-00-EL	(1)
16-18 / 4.8-5.5	23-30 / 37-48	10 7/8 X 11 RH	AL	3	Black Diamond	QA2070X	663-45947-02-EL	(1)
15-17 / 4.5-5.2	30-31 / 48-50	10 5/8 X 12 RH	AL	3	Black Diamond	QA2074X	6H5-45958-00-EL	(1)
14-17 / 4.2-5.2	31-35 / 50-56	10 3/8 X 13 RH	AL	3	Black Diamond	QA2078X	6H5-45943-00-EL	(1)
14-16 / 4.2-4.8	35-38 / 56-61	10 1/4 X 14 RH	AL	3	Black Diamond	QA2082X	663-45958-01-EL	(1)
13-15 / 3.9-4.5	38-42 / 61-68	10 1/8 X 15 RH	AL	3	Black Diamond	QA2084X		(1)
15-17 / 4.5-5.2	30-31 / 48-50	10.6 X 12 RH	AL	4	Nemesis	48-8M8027511		(1)
14-17 / 4.2-5.2	31-35 / 50-56	10.3X 13 RH	AL	4	Nemesis	48-8M8027512		(1)
14-16 / 4.2-4.8	35-38 / 56-61	10.1 X 14 RH	AL	4	Nemesis	48-8M8027513		(1)
13-15 / 3.9-4.5	38-42 / 61-68	10.1 X 15 RH	AL	4	Nemesis	48-8M8027514		(1)
15-17 / 4.5-5.2	30-31 / 48-50	11 X 12 RH	SS	3	Silverado	QS5164X	663-45970-60-98	(1)
14-17 / 4.2-5.2	31-35 / 50-56	10 1/2 X 13 RH	SS	3	Silverado	QS5166X	663-45974-60-98	(1)
14-16 / 4.2-4.8	35-38 / 56-61	10 3/8 X 14 RH	SS	3	Silverado	QS5168X	663-45930-00-98	(1)
13-15 / 3.9-4.5	38-42 / 61-68	10 1/4 X 15 RH	SS	3	Silverado	QS5170X	663-45976-00-98	(1)

(1) Flo-Torq Reflex Propeller - All required hardware included

T50-130 Horsepower - Yamaha

T50 HP 4-Stroke 1996 and Newer
60 HP 1992 and Newer
T60 HP 4-Stroke 2003 and Newer
70 HP 1984 and Newer
75 HP 1994-2000
F75 4-Stroke 2003 and Newer
80 HP 1977, 2000 and Newer
F80 HP 4-Stroke 1999 and Newer
85 HP 1991-97
90 HP 1984 and Newer
F90 HP 4-Stroke 2003 and Newer
F100 HP 4-Stroke 2000 and Newer
115 HP 1984 and Newer
F115 HP 4-Stroke 2000 and Newer
130 HP 1984 and Newer
15 Tooth Spline

Length (ft/m)	Current MPH/KPH	Propeller Size	Matl	Blades	Style	Quicksilver P/N	OEM P/N	Hub System
House/Work	to 14 / to 23	14 X 9 RH	AL	3	Black Diamond	QA2026X		(1)
Pontoon/Work	to 19 / to 31	14 X 10 RH	AL	3	Black Diamond	QA2028X		(1)
Pontoon	to 19 / to 31	14 X 10 RH	AL	3	Black Diamond	QA2828X		(1)(2)
23'+ / 7.0+	to 21 / to 34	14 X 11 RH	AL	3	Black Diamond	QA2030X	6E5-45954-00-EL	(1)
Pontoon	to 21 / to 34	14 X 11 RH	AL	3	Black Diamond	QA2830X		(1)(2)
20'+ / 6.1+	19-27 / 31-44	14 X 13 RH	AL	3	Black Diamond	QA2032X	6E5-45949-00-EL	(1)
Pontoon	19-27 / 31-44	14 X 13 RH	AL	3	Black Diamond	QA2832X		(1)(2)
18-20 / 5.5-6.1	25-32 / 40-52	13 3/4 X 15 RH	AL	3	Black Diamond	QA2034X	6E5-45947-00-EL	(1)
17-19 / 5.2-5.8	30-38 / 48-61	13 1/4 X 17 RH	AL	3	Black Diamond	QA2036X	6E5-45945-01-EL	(1)
15-18 / 4.5-5.5	35-41 / 56-66	13 X 19 RH	AL	3	Black Diamond	QA2038X	6E5-45941-00-EL	(1)
14-17 / 4.2-5.2	39-46 / 63-74	12 3/4 X 21 RH	AL	3	Black Diamond	QA2040X	6E5-45943-00-EL	(1)
to 16 / to 4.8	44-50 / 71-81	12 1/2 X 23 RH	AL	3	Black Diamond	QA2042X	6E5-45952-00-EL	(1)
Pontoon	to 19 / to 31	13.8 X 10 RH	AL	4	Nemesis Pontoon	48-8M8027497		(1)
Pontoon	to 21 / to 34	13.8 X 11 RH	AL	4	Nemesis Pontoon	48-8M8027498		(1)
Pontoon	19-27 / 31-44	13.8 X 13 RH	AL	4	Nemesis Pontoon	48-8M8027500		(1)
18-20 / 5.5-6.1	25-32 / 40-52	13.4 X 15 RH	AL	4	Nemesis	48-8M8027502		(1)
17-19 / 5.2-5.8	30-38 / 48-61	13.0 X 17 RH	AL	4	Nemesis	48-8M8027504		(1)
15-18 / 4.5-5.5	35-41 / 56-66	12.5 X 19 RH	AL	4	Nemesis	48-8M8027506		(1)
23-26 / 7.0-7.8	25-29 / 42-47	14 X 10 RH	SS	3	Silverado	48-8M0055292		(1)
21-25 / 6.4-7.8	27-31 / 45-50	14 X 12 RH	SS	3	Silverado	48-8M0055293		(1)
18-20 / 5.5-6.1	25-32 / 40-52	13 3/8 X 14 RH	SS	3	Silverado	QS5114X	688-45932-60-98	(1)
17-19 / 5.2-5.8	30-38 / 48-61	13 1/8 X 16 RH	SS	3	Silverado	QS5116X	688-45978-60-98	(1)
15-18 / 4.5-5.5	35-41 / 56-66	13 X 18 RH	SS	3	Silverado	QS5118X	688-45930-02-98	(1)

(1) Use Flo-Torq II attaching hardware kit 835272Q1 on 50 to 100HP applications and kit 835271Q2 on 115 & 130HP units. Purchase separately.

(2) Extra Cup Version

QUICKSILVER PROPELLER APPLICATION CHARTS

150-300 Horsepower - Yamaha

150 HP 1986 and Newer, F150 4-Stroke 2004 and Newer
175 HP 1984 and Newer
200 HP 1984 and Newer, F200 HP 4-Stroke 2002 and Newer
220 HP Special 1984-85
225 HP Excel 1987-88
225 HP 1986 and Newer, F225 HP 4-Stroke 2002 and Newer
250 HP 1990 and Newer (Including VMAX), F250 HP 4-Stroke 2005 and Newer
300 HP 2003 and Newer, 300 HPDI 2004 and Newer
150-250 HP SHO 4-Stroke
15 Tooth Spline

Length (ft/m)	Current MPH/KPH	Propeller Size	Matl	Blades	Style	Quicksilver P/N	OEM P/N	Hub System
Pontoon	to 26 / to 42	14 X 12 RH	AL	4	Nemesis	48-8M0055531		(2)
Pontoon	to 29 / to 47	14 X 14 RH	AL	4	Nemesis	48-8M0055531		(2)
21-25 / 6.4-7.8	36-44 / 58-71	14 X 17 RH	AL	4	Nemesis	48-8M0055534		(2)
19-23 / 5.8-7.0	42-50 / 68-81	14 X 19 RH	AL	4	Nemesis	48-8M0055535		(2)
18-22 / 5.5-6.7	47-56 / 76-90	14 X 21 RH	AL	4	Nemesis	48-8M0055536		(2)
17-20 / 5.2-6.1	53-61 / 85-98	14 X 23 RH	AL	4	Nemesis	48-8M0055537		(2)
House/Work	to 24 / to 39	16 X 11 RH	AL	3	Black Diamond	QA2000X		(2)
25-30 / 7.8-9.1	23-32 / 37-52	16 X 13 RH	AL	3	Black Diamond	QA2004X		(2)
23-29 / 7.0-8.8	27-35 / 44-56	16 X 14 RH	AL	3	Black Diamond	QA2006X		(2)
22-27 / 6.7-8.2	30-38 / 48-61	15 1/2 X 15 RH	AL	3	Black Diamond	QA2008X	6G5-45941-00-98	(2)
23-26 / 6.7-7.9	33-40 / 53-65	16 X 16 RH	AL	3	Black Diamond	QA2010X	6G5-45952-00-98	(2)
21-25 / 6.4-8.8	36-44 / 58-71	15 X 17 RH	AL	3	Black Diamond	QA1912X		(2)
20-24 / 6.1-7.3	39-47 / 63-76	15 1/2 X 18 RH	AL	3	Black Diamond	QA2014X		(2)
19-23 / 5.8-7.0	42-50 / 68-81	14 1/2 X 19 RH	AL	3	Black Diamond	QA1916X		(2)
18-22 / 5.5-6.7	47-56 / 76-90	14 1/4 X 21 RH	AL	3	Black Diamond	QA1918X		(2)
17-20 / 5.2-6.1	53-61 / 86-98	14 X 23 RH	AL	3	Black Diamond	QA1920X	6G5-45949-00-98	(2)
21-25 / 6.4-8.8	36-44 / 58-71	15 X 16 RH	AL	4	Diamond 4	QA2182X		(2)
19-23 / 5.8-7.0	42-50 / 68-81	14 1/2 X 18 RH	AL	4	Diamond 4	QA2184X		(2)
18-22 / 5.5-6.7	47-56 / 76-90	14 X 20 RH	AL	4	Diamond 4	QA2186X		(2)
22-27 / 6.7-8.2	30-38 / 48-61	14 1/2 X 15 RH	SS	3	Silverado	QS5050X	6G5-45970-02-98	(2)
21-25 / 6.4-8.8	36-44 / 58-71	14 1/2 X 17 RH	SS	3	Silverado	QS5052X	6G5-45978-03-98	(2)
19-23 / 5.8-7.0	42-50 / 68-81	14 X 19 RH	SS	3	Silverado	QS5054X	6G5-45974-03-98	(2)
18-22 / 5.5-6.7	47-56 / 76-90	13 3/4 X 21 RH	SS	3	Silverado	QS5056X	6G5-45972-02-98	(2)
21-25 / 6.4-8.8	36-44 / 58-71	13 1/2 X 17	SS	5	QST 5	QS1154X		(2)
19-23 / 5.8-7.0	42-50 / 68-81	13 1/3 X 19	SS	5	QST 5	QS5758X		(2)
18-22 / 5.5-6.7	47-56 / 76-90	13 1/3 X 21	SS	5	QST5	QS5760X		(2)
22-27 / 6.7-8.2	30-38 / 48-61	15 3/4 X 15 RH	SS	3	Thunderbolt	QS5002X		(2)
21-25 / 6.4-8.8	36-44 / 58-71	15 1/2 X 17 RH	SS	3	Thunderbolt	QS5004X	6R4-45978-A0-00	(2)
19-23 / 5.8-7.0	42-50 / 68-81	15 1/4 X 19 RH	SS	3	Thunderbolt	QS5006X	6R4-45970-A0-00	(2)
18-22 / 5.5-6.7	47-56 / 76-90	14 3/4 X 21 RH	SS	3	Thunderbolt	QS5008X	6R4-45972-A0-00	(2)
18-22 / 5.5-6.7	47-56 / 76-90	14 5/8 X 21 RH	SS	3	Torrent	QS5862X		(2)(3)
17-20 / 5.2-6.1	53-61 / 86-98	14 5/8 X 23 RH	SS	3	Torrent	QS5864X		(2)(3)
to 19 / to 5.8	59-69 / 95-111	14 5/8 X 25 RH	SS	3	Torrent	QS5866X		(2)(3)
Pontoon	10-25 / 16-40	16 X 11P RH	SS	3	Q3	48-8M0103516		(2)
Pontoon	11-26 / 17-41	15.6 X 13P RH	SS	3	Q3	48-8M0103517		(2)
Pontoon	12-27 / 18-42	15.3 X 14P RH	SS	3	Q3	48-8M0103518		(2)
Pontoon/Cruiser	17-30 / 27-49	15 X 15P RH	SS	3	Q3	48-8M0103519		(2)
21-26 / 6.4-7.8	24-36 / 39-58	14.7 X 16P R	SS	3	Q3	48-8M0103520		(2)
21-26 / 6.4-7.8	30-42 / 48-68	14.5 X 17P RH	SS	3	Q3	48-8M0103521		(2)
19-22 / 5.8-6.7	33-45 / 53-73	14.2 X 18P RH	SS	3	Q3	48-8M0103522		(2)
19-22 / 5.8-6.7	36-49 / 58-79	14 X 19P RH	SS	3	Q3	48-8M0103523		(2)
17-20 / 5.2-6.1	39-52 / 63-84	13.8 X 20P RH	SS	3	Q3	48-8M0103524		(2)
17-20 / 5.2-6.1	42-56 / 68-90	13.6 X 21P RH	SS	3	Q3	48-8M0103525		(2)

QUICKSILVER PROPELLER APPLICATION CHARTS

Length (ft/m)	Current MPH/KPH	Propeller Size	Matl	Blades	Style	Quicksilver P/N	OEM P/N	Hub System
21-26 / 6.4-7.8	30-42 / 48-68	14.6 X 17P RH	SS	4	Q4	48-8M0103526		(2)(3)
19-22 / 5.8-6.7	36-49 / 58-79	14.6 X 19P RH	SS	4	Q4	48-8M0103528		(2)(3)
17-20 / 5.2-6.1	42-56 / 68-90	14.6 X 21P RH	SS	4	Q4	48-8M0103530		(2)(3)
15-19 / 4.5-5.8	50-64 / 81-103	14.6 X 23P RH	SS	4	Q4	48-8M0103533		(2)(3)
LH Propellers (1)								
		15 X 16 LH	AL	4	Diamond 4	QA2183X		(2)
		14 1/2 X 18 LH	AL	4	Diamond 4	QA2185X		(2)
		14 X 20 LH	AL	4	Diamond 4	QA2187X		(2)
		15 3/4 X 15 LH	SS	3	Thunderbolt	QS5003X		(2)
		15 1/2 X 17 LH	SS	3	Thunderbolt	QS5005X	6R1-45978-A0-00	(2)
		15 1/4 X 19 LH	SS	3	Thunderbolt	QS5007X	6R1-45970-A0-00	(2)
		14 3/4 X 21 LH	SS	3	Thunderbolt	QS5009X	6R1-45972-A0-00	(2)
		14.6 X 17P LH	SS	4	Q4	48-8M0103527		(2)(3)
		14.6 X 19P LH	SS	4	Q4	48-8M0103529		(2)(3)
		14.6 X 21P LH	SS	4	Q4	48-8M0103531		(2)(3)
		14.6 X 23P LH	SS	4	Q4	48-8M0103533		(2)(3)

(2) Use Flo-Torq II attaching hardware kit 835271Q2. Use Flo-Torq II attaching hardware kit 8M0075402 with 200-250 HP SOH. Purchase separately.

(3) Use forward bushing 23-856163Q1 along with Flo-Torq hub kit for surface piercing applications with Q4 and Torrent propellers. Purchase separately.

MERCRUISER STERNDRIVE APPLICATION CHARTS

ALPHA ONE, MERCRUISER I

MERCRUISER I 120-190 HP
Models 470, 485, 888, 898, 225S & 233
ALPHA ONE 1986 AND NEWER
4.5 Liter 200 HP 2014 and Newer
2.5 Liter 120HP 1986-89
3.0 Liter 125-140HP 1986 & Newer
3.7 Liter 165-190HP 1986-89
Warning! Check for adequate tip clearance with stainless and 4 blade aluminum props. If necessary, switch to a flat tab anode (76214Q 5) or high performance trim tab (822777Q 1) to permit clearance.

Length (ft/m)	Current MPH/KPH	Propeller Size	Matl	Blades	Style	Quicksilver P/N	OEM P/N	Hub System
Work / House	to 26 / to 42	14 X 12 RH	AL	4	Nemesis	48-8M0055531	48-8M0084491	(2)
Work / House	to 29 / to 46	14 X 14 RH	AL	4	Nemesis	48-8M0055533	48-8M0084493	(2)
21-25 / 6.4-7.8	36-44 / 58-71	14 X 17 RH	AL	4	Nemesis	48-8M0055534	48-8M0084494	(2)
19-23 / 5.8-7.0	42-50 / 68-81	14 X 19 RH	AL	4	Nemesis	48-8M0055535	48-8M0084495	(2)
18-22 / 5.5-6.7	47-56 / 76-90	14 X 21 RH	AL	4	Nemesis	48-8M0055536	48-8M0084496	(2)
17-20 / 5.2-6.1	53-61 / 85-98	14 X 23 RH	AL	4	Nemesis	48-8M0055537	48-8M0084497	(2)
24+ / 7.3	to 10 / to 16	16 X 11 RH	AL	3	Black Diamond	QA2000X	78112A45	(2)
23-27 / 7.0-8.2	18-22 / 29-36	16 X 13 RH	AL	3	Black Diamond	QA2004X	78114A45	(2)
21-25 / 6.4-7.6	22-26 / 36-42	16 X 14 RH	AL	3	Black Diamond	QA2006X	16438A45	(2)
21-25 / 6.4-7.8	22-31 / 36-50	15 1/2 X 15 RH	AL	3	Black Diamond	QA2008X	78116A45	(2)
21-25 / 6.4-7.8	26-31 / 42-50	16 X 16 RH	AL	3	Black Diamond	QA2010X	16440A45	(2)
19-23 / 5.8-7.0	30-36 / 48-58	15 X 17 RH	AL	3	Black Diamond	QA1912X	832828A45	(2)
18-22 / 5.5-6.7	32-38 / 52-61	15 1/2 X 18 RH	AL	3	Black Diamond	QA2014X	48- 11324A45	(2)
17-21 / 5.2-6.4	35-41 / 56-66	14 1/2 X 19 RH	AL	3	Black Diamond	QA1916X	832830A45	(2)
to 19 / to 5.8	40-46 / 65-74	14 1/4 X 21 RH	AL	3	Black Diamond	QA1918X	832832A45	(2)
to 18 / to 5.5	44-49 / 71-79	14 X 23 RH	AL	3	Black Diamond	QA1920X	832834A45	(2)
19-23 / 5.8-7.0	30-36 / 48-58	15 X 16 RH	AL	4	Diamond 4	QA2182X	834850A45	(2)
17-21 / 5.2-6.4	35-41 / 56-66	14 1/2 X 18 RH	AL	4	Diamond 4	QA2184X	834852A45	(2)
to 19 / to 5.8	40-46 / 65-74	14 X 20 RH	AL	4	Diamond 4	QA2186X	834854A45	(2)

QUICKSILVER PROPELLER APPLICATION CHARTS

Length (ft/m)	Current MPH/KPH	Propeller Size	Matl	Blades	Style	Quicksilver P/N	OEM P/N	Hub System
21-25 / 6.4-7.8	22-31 / 36-50	14 1/2 X 15 RH	SS	3	Silverado	QS5050X	16312A46	(2)
19-23 / 5.8-7.0	30-36 / 48-58	14 1/2 X 17 RH	SS	3	Silverado	QS5052X	16314A46	(2)
17-21 / 5.2-6.4	35-41 / 56-66	14 X 19 RH	SS	3	Silverado	QS5054X	16316A46	(2)
to 19 / to 5.8	40-46 / 65-74	13 3/4 X 21 RH	SS	3	Silverado	QS5056X	16318A46	(2)
19-23 / 5.8-7.0	30-36 / 48-58	13 /12 X 17 RH	SS	5	QST 5	QS1154X	48-821154A46	(2)
17-21 / 5.2-6.4	35-41 / 56-66	13 1/3 X19 RH	SS	5	QST 5	QS5758X	48-815758A46	(2)
to 19 / to 5.8	35-41 / 56-66	13 1/3 X 21 RH	SS	5	QST 5	QS5760X	48-815760A46	(2)
21-25 / 6.4-7.8	22-31 / 36-50	15 3/4 X 15 RH	SS	3	Thunderbolt - New -	QS5002X	19838A46	(2)
19-23 / 5.8-7.0	30-36 / 48-58	15 1/2 X 17 RH	SS	3	Thunderbolt	QS5004X	18278A46	(2)
17-21 / 5.2-6.4	35-41 / 56-66	15 1/4 X 19 RH	SS	3	Thunderbolt	QS5006X	13700A46	(2)
to 19 / to 5.8	40-46 / 65-74	14 3/4 X 21 RH	SS	3	Thunderbolt	QS5008X	13702A46	(2)
24+ / 7.3+	to 10 / to 16	16 X 11P RH	SS	3	Q3	48-8M0103516	8M0070079	(2)
23-27 / 7.0-8.2	15-18 / 24-29	15.6 X 13P RH	SS	3	Q3	48-8M0103517	8M0070079	(2)
23-27 / 7.0-8.2	18-22 / 29-36	15.3 X 14P RH	SS	3	Q3	48-8M0103518	898990A46	(2)
21-25 / 6.4-7.6	22-26 / 36-42	15 X 15P RH	SS	3	Q3	48-8M0103519	898990A46	(2)
21-25 / 6.4-7.6	22-31 / 36-50	14.7 X 16P RH	SS	3	Q3	48-8M0103520	898992A46	(2)
21-25 / 6.4-7.6	26-31 / 42-50	14.5 X 17P RH	SS	3	Q3	48-8M0103521	898994A46	(2)
19-23 / 5.8-7.0	30-36 / 48-58	14.2 X 18P RH	SS	3	Q3	48-8M0103522	898996A46	(2)
18-22 / 5.5-6.7	32-38 / 52-61	14 X 19P RH	SS	3	Q3	48-8M0103523	898998A46	(2)
17-21 / 5.2-6.4	34-41 / 56-66	13.8 X 20P RH	SS	3	Q3	48-8M0103524	899900A46	(2)
to 19 / to 5.8	40-46 / 64-74	13.6 X 21P RH	SS	3	Q3	48-8M0103525	899902A46	(2)
21-25 / 6.4-7.6	26-31 / 42-50	14.6 X 17P LH	SS	4	Q4	48-8M0103526	857024A46	(2)
18-22 / 5.5-6.7	32-38 / 52-61	14.6 X 19P LH	SS	4	Q4	48-8M0103528	857026A46	(2)
to 19 / to 5.8	40-46 / 64-74	14.6 X 21P LH	SS	4	Q4	48-8M0103530	857028A46	(2)
to 18 / to 5.5	44-49 / 71-79	14.6 X 23P LH	SS	4	Q4	48-8M0103532	857030A46	(2)
LH Propellers (1)		15 X 16 LH	AL	4	Diamond 4	QA2183X	834851A45	(2)
		14 1/2 X 18 LH	AL	4	Diamond 4	QA2185X	834853A45	(2)
		14 X 20 LH	AL	4	Diamond 4	QA2187X	834855A45	(2)
		15 3/4 X 15 LH	SS	3	Thunderbolt	QS5003X	19841A46	(2)
		15 1/2 X 17 LH	SS	3	Thunderbolt	QS5005X	90159A46	(2)
		15 1/4 X 19 LH	SS	3	Thunderbolt	QS5007X	13701A46	(2)
		14 3/4 X 21 LH	SS	3	Thunderbolt	QS5009X	13703A46	(2)
		14.6 X 19P LH	SS	4	Q4	48-8M0103527	857025A46	(2)
		14.6 X 21P LH	SS	4	Q4	48-8M0103529	857027A46	(2)
		14.6 X 23P LH	SS	4	Q4	48-8M0103531	857029A46	(2)
		14.6 X 23P LH	SS	4	Q4	48-8M0103533	857031A46	(2)

(2) Use Flo-Torq II attaching hardware kit 835257Q1. Purchase separately.

ALPHA ONE/BRAVO ONE

MERCRUISER 200-280 HP Thru 1985
Models 228, 255, 260, & 280TRS
ALPHA ONE/BRAVO ONE 1986 AND NEWER
4.5 Liter 200-250 HP 2014 and Newer
4.3 Liter 155-250 HP 1986 - 2014
5.0 Liter 180-250 HP 1986 - 2014 (Including 262 Mag)
Warning! Check for adequate tip clearance when installing stainless steel or aluminum 4 blade propellers. If necessary, swicht to high performance trim tab (822777Q1) to allow adequate clearance.

Length (ft/m)	Current MPH/KPH	Propeller Size	Matl	Blades	Style	Quicksilver P/N	OEM P/N	Hub System
Work / House	to 26 / to 42	14 X 12 RH	AL	4	Nemesis	48-8M0055531	48-8M0084491	(2)
Work / House	to 29 / to 46	14 X 14 RH	AL	4	Nemesis	48-8M0055533	48-8M0084493	(2)
22-26 / 6.7-7.9	36-41 / 58-66	14 X 17 RH	AL	4	Nemesis	48-8M0055534	48-8M0084494	(2)
21-25 / 6.4-7.6	41-46 / 66-74	14 X 19 RH	AL	4	Nemesis	48-8M0055535	48-8M0084495	(2)
19-23 / 5.8-7.0	46-51 / 74-82	14 X 21 RH	AL	4	Nemesis	48-8M0055536	48-8M0084496	(2)

Length (ft/m)	Current MPH/KPH	Propeller Size	Matl	Blades	Style	Quicksilver P/N	OEM P/N	Hub System
to 20 / to 6.1	51-56 / 74-90	14 X 23 RH	AL	4	Nemesis	48-8M0055537	48-8M0084497	(2)
26+ / 7.9+	to 16 / to 26	16 X 11 RH	AL	3	Black Diamond	QA2000X	48-78112A45	(2)
24-29 / 7.3-8.8	17-26 / 5.2-42	16 X 13 RH	AL	3	Black Diamond	QA2004X	48-78114A45	(2)
24-29 / 7.3-8.8	22-31 / 35-50	16 X 14 RH	AL	3	Black Diamond	QA2006X	48-16438A45	(2)
23-27 / 7.0-8.2	26-36 / 42-58	15 1/2 X 15 RH	AL	3	Black Diamond	QA2008X	48-78116A45	(2)
23-27 / 7.0-8.2	31-39 / 50-63	16 X 16 RH	AL	3	Black Diamond	QA2010X	48-16440A45	(2)
22-26 / 6.7-7.9	36-41 / 58-66	15 X 17 RH	AL	3	Black Diamond	QA1912X	48-832828A45	(2)
22-26 / 6.7-7.9	38-44 / 61-71	15 1/2 X 18 RH	AL	3	Black Diamond	QA2014X	48-11324A45	(2)
21-25 / 6.4-7.6	41-46 / 66-74	14 1/2 X 19 RH	AL	3	Black Diamond	QA1916X	48-832830A45	(2)
19-23 / 5.8-7.0	46-51 / 74-82	14 1/4 X 21 RH	AL	3	Black Diamond	QA1918X	48-832832A45	(2)
to 20 / to 6.1	51-56 / 74-90	14 X 23 RH	AL	3	Black Diamond	QA1920X	48-832834A45	(2)
22-26 / 6.7-7.9	36-41 / 58-66	15 X 16 RH	AL	4	Diamond 4	QA2182X	48-834850A45	(2)
21-25 / 6.4-7.6	41-46 / 66-74	14 1/2 X 18 RH	AL	4	Diamond 4	QA2184X	48-834852A45	(2)
19-23 / 5.8-7.0	46-51 / 74-82	14 X 20 RH	AL	4	Diamond 4	QA2186X	48-834854A45	(2)
23-27 / 7.0-8.2	26-36 / 42-58	14 1/2 X 15 RH	SS	3	Silverado	QS5050X	48-16312A46	(2)
22-26 / 6.7-7.9	36-41 / 58-66	14 1/2 X 17 RH	SS	3	Silverado	QS5052X	48-16314A46	(2)
21-25 / 6.4-7.6	41-46 / 66-74	14 X 19 RH	SS	3	Silverado	QS5054X	48-16316A46	(2)
19-23 / 5.8-7.0	46-51 / 74-82	13 3/4 X 21 RH	SS	3	Silverado	QS5056X	48-16318A46	(2)
22-26 / 6.7-7.9	36-41 / 58-66	13 1/2 X 17 RH	SS	5	QST 5	QS1154X	821154A46	(2)
21-25 / 6.4-7.6	41-46 / 66-74	13 1/3 X 19 RH	SS	5	QST 5	QS5758X	815758A46	(2)
19-23 / 5.8-7.0	46-51 / 74-82	13 1/3 X 21 RH	SS	5	QST 5	QS5760X	815760A46	(2)
23-27 / 7.0-8.2	26-36 / 42-58	15 3/4 X 15 RH	SS	3	Thunderbolt	QS5002X	48-19838A46	(2)
22-26 / 6.7-7.9	36-41 / 58-66	15 1/2 X 17 RH	SS	3	Thunderbolt	QS5004X	48-18278A46	(2)
21-25 / 6.4-7.6	41-46 / 66-74	15 1/4 X 19 RH	SS	3	Thunderbolt	QS5006X	48-13700A46	(2)
19-23 / 5.8-7.0	46-51 / 74-82	14 3/4 X 21 RH	SS	3	Thunderbolt	QS5008X	48-13702A46	(2)
26+ / 7.9+	to 16 / to 26	16 X 11P RH	SS	3	Q3	48-8M0103516	8M0070079	(2)
24-29 / 7.3-8.8	16-21 / 26-34	15.6 X 13P RH	SS	3	Q3	48-8M0103517	8M0070077	(2)
24-29 / 7.3-8.8	17-26 / 30-42	15.3 X 14P RH	SS	3	Q3	48-8M0103518	898988A46	(2)
24-29 / 7.3-8.8	22-31 / 35-50	15 X 15P RH	SS	3	Q3	48-8M0103519	898990A46	(2)
23-27 / 7.0-8.2	26-36 / 42-58	14.7 X 16P RH	SS	3	Q3	48-8M0103520	898992A46	(2)
23-27 / 7.0-8.2	31-39 / 50-63	14.5 X 17P RH	SS	3	Q3	48-8M0103521	898994A46	(2)
22-26 / 6.7-7.9	36-41 / 58-66	14.2 X 18P RH	SS	3	Q3	48-8M0103522	898996A46	(2)
22-26 / 6.7-7.9	38-44 / 61-71	14 X 19P RH	SS	3	Q3	48-8M0103523	898998A46	(2)
21-25 / 6.4-7.6	41-46 / 66-74	13.8 X 20P RH	SS	3	Q3	48-8M0103524	899000A46	(2)
19-23 / 5.8-7.0	46-51 / 74-82	13.6 X 21P RH	SS	3	Q3	48-8M0103525	899002A46	(2)
23-27 / 7.0-8.2	31-39 / 50-63	14.6 X 17P RH	SS	4	Q4	48-8M0103526	857024A46	(2)
22-26 / 6.7-7.9	38-44 / 61-71	14.6 X 19P RH	SS	4	Q4	48-8M0103528	857026A46	(2)
19-23 / 5.8-7.0	46-51 / 74-82	14.6 X 21P RH	SS	4	Q4	48-8M0103530	857028A46	(2)
to 20 / to 6.1	51-56 / 74-90	14.6 X 23P RH	SS	4	Q4	48-8M0103532	857030A46	(2)
LH Propellers (1)		15 X 16 LH	AL	4	Diamond 4	QA2183X	48-834851A45	(2)
		14 1/2 X 18 LH	AL	4	Diamond 4	QA2185X	48-834853A45	(2)
		14 X 20 LH	AL	4	Diamond 4	QA2187X	48-834855A45	(2)
		15 1/2 X 17 LH	SS	3	Thunderbolt	QS5005X	48-90159A46	(2)
		15 1/4 X 19 LH	SS	3	Thunderbolt	QS5007X	48-13701A46	(2)
		14 3/4 X 21 LH	SS	3	Thunderbolt	QS5009X	48-13703A46	(2)
		14 5/8 X 23 LH	SS	3	Thunderbolt	QS5011X	48-13705A46	(2)
		14.6 X 17P LH	SS	4	Q4	48-8M0103527	857025A46	(2)
		14.6 X 19P LH	SS	4	Q4	48-8M0103529	857027A46	(2)
		14.6 X 21P LH	SS	4	Q4	48-8M0103531	857029A46	(2)
		14.6 X 23P LH	SS	4	Q4	48-8M0103533	857031A46	(2)

(2) Use Flo-Torq II attaching hardware kit 835257Q1. Order separate.

QUICKSILVER PROPELLER APPLICATION CHARTS

ALPHA ONE/BRAVO ONE

Model 330TRS
4.5 Liter 250 HP 2014 & Newer
5.7 Liter 210-320 HP 1986 & Newer
6.2 Liter 320 HP 2001 & newer
7.4 Liter 300-385 HP 1988 & Newer
8.1 Liter 375-425 HP 2001 & Newer
8.2 Liter 390-415 HP 1990 & Newer
Including 350, 454, 496 & 502 Mag. & 320 EFI
Add 2" of pitch to suggested size for singe engine applications 385 HP and above.
Caution! Check for adequate blade tip clearance when installing stainless steel propellers. If necessary, switch to Mercury trim tab 822777Q1 to ensure adequate blade clearance.

Length (ft/m)	Current MPH/KPH	Propeller Size	Matl	Blades	Style	Quicksilver P/N	OEM P/N	Hub System
22-26 / 6.7-7.9	36-41 / 58-66	14 X 17 RH	AL	4	Nemesis	48-8M0055534	48-8M0084494	(2)
21-25 / 6.4-7.6	41-46 / 66-74	14 X 19 RH	AL	4	Nemesis	48-8M0055535	48-8M0084495	(2)
19-23 / 5.8-7.0	46-51 / 74-82	14 X 21 RH	AL	4	Nemesis	48-8M0055536	48-8M0084496	(2)
to 20 / to 6.1	51-56 / 74-90	14 X 23 RH	AL	4	Nemesis	48-8M0055537	48-8M0084497	(2)
29+ / 8.8+	to18 / to 29	16 X 11 RH	AL	3	Black Diamond	QA2000X	48-78112A45	(2)
29-34 / 8.8-10.3	18-30 / 29-48	16 X 13 RH	AL	3	Black Diamond	QA2004X	48-78114A45	(2)
29-32 / 8.8-9.7	24-35 / 39-56	16 X 14 RH	AL	3	Black Diamond	QA2006X	48-16438A45	(2)
27-30 / 8.2-9.1	29-40 / 47-65	15 1/2 X 15 RH	AL	3	Black Diamond	QA2008X	48-78116A45	(2)
26-30 / 8.2-9.1	29-40 / 47-65	16 X 16 RH	AL	3	Black Diamond	QA2010X	48-16440A45	(2)
25-29 / 7.6-8.8	40-46 / 65-74	15 X 17 RH	AL	3	Black Diamond	QA1912X	48-832828A45	(2)
24-28 / 7.3-8.9	43-49 / 69-79	15 1/2 X 18 RH	AL	3	Black Diamond	QA2014X	48-11324A45	(2)
23-26 / 7.0-7.9	46-51 / 74-82	14 1/2 X 19 RH	AL	3	Black Diamond	QA1916X	48-832830A45	(2)
22-25 / 6.7-7.6	51-56 / 82-90	14 1/4 X 21 RH	AL	3	Black Diamond	QA1918X	48-832832A45	(2)
22-24 / 6.7-7.3	56-62 / 90-100	14 X 23 RH	AL	3	Black Diamond	QA1920X	48-832834A45	(2)
25-29 / 7.6-8.8	40-46 / 65-74	15 X 16 RH	AL	4	Diamond 4	QA2182X	48-834850A45	(2)
23-26 / 7.0-7.9	46-51 / 74-82	14 1/2 X 18 RH	AL	4	Diamond 4	QA2184X	48-834852A45	(2)
22-25 / 6.7-7.6	51-56 / 82-90	14 X 20 RH	AL	4	Diamond 4	QA2186X	48-834854A45	(2)
27-30 / 8.2-9.1	29-40 / 47-65	14 1/2 X 15 RH	SS	3	Silverado	QS5050X	48-16312A46	(2)
25-29 / 7.6-8.8	40-46 / 65-74	14 1/2 X 17 RH	SS	3	Silverado	QS5052X	48-16314A46	(2)
23-26 / 7.0-7.9	46-51 / 74-82	14 X 19 RH	SS	3	Silverado	QS5054X	48-16316A46	(2)
22-25 / 6.7-7.6	51-56 / 82-90	13 3/4 X 21 RH	SS	3	Silverado	QS5056X	48-16318A46	(2)
25-29 / 7.6-8.8	40-46 / 65-74	13 1/2 X 17 RH	SS	5	QST 5	QS1154X	48-821154A46	(2)
23-26 / 7.0-7.9	46-51 / 74-82	13 1/3 X 19 RH	SS	5	QST 5	QS5758X	48-815758A46	(2)
22-25 / 6.7-7.6	51-56 / 82-90	13 1/3 X 21 RH	SS	5	QST 5	QS5760X	48-815760A46	(2)
27-30 / 8.2-9.1	29-40 / 47-65	15 3/4 X 15 RH	SS	3	Thunderbolt	QS5002X	48-19838A46	(2)
25-29 / 7.6-8.8	40-46 / 65-74	15 1/2 X 17 RH	SS	3	Thunderbolt	QS5004X	48-18278A46	(2)
23-26 / 7.0-7.9	46-51 / 74-82	15 1/4 X 19 RH	SS	3	Thunderbolt	QS5006X	48-13700A46	(2)
22-25 / 6.7-7.6	51-56 / 82-90	14 3/4 X 21 RH	SS	3	Thunderbolt	QS5008X	48-13702A46	(2)
29+ / 8.8+	to 18 / to 29	16 X 11P RH	SS	3	Q3	48-8M0103516	8M0070077	(2)
29-34 / 8.8-10.3	18-25 / 29-40	15.6 X 13P RH	SS	3	Q3	48-8M0103517	8M0070079	(2)
29-34 / 8.8-10.3	18-30 / 29-48	15.3 X 14P RH	SS	3	Q3	48-8M0103518	898988A46	(2)
29-32 / 8.8-9.7	24-35 / 39-56	15 X 15P RH	SS	3	Q3	48-8M0103519	898990A46	(2)
27-30 / 8.2-9.1	29-40 / 47-65	14.7 X 16P RH	SS	3	Q3	48-8M0103520	898992A46	(2)
26-30 / 8.2-9.1	29-40 / 47-65	14.5 X 17P RH	SS	3	Q3	48-8M0103521	898994A46	(2)
25-29 / 7.6-8.8	40-46 / 64-74	14.2 X 18P RH	SS	3	Q3	48-8M0103522	898996A46	(2)
24-28 / 7.3-8.9	43-49 / 69-79	14 X 19P RH	SS	3	Q3	48-8M0103523	898998A46	(2)
23-26 / 7.0-7.9	46-51 / 74-82	13.8 X 20P RH	SS	3	Q3	48-8M0103524	899000A46	(2)
22-25 / 6.7-7.6	51-56 / 82-90	13.6 X 21P RH	SS	3	Q3	48-8M0103525	899002A46	(2)
26-30 / 8.2-9.1	29-40 / 47-65	14.6 X 17P RH	SS	4	Q4	48-8M0103526	857024A46	(2)
24-28 / 7.3-8.9	43-49 / 69-79	14.6 X 19P RH	SS	4	Q4	48-8M0103528	857026A46	(2)
22-25 / 6.7-7.6	51-56 / 82-90	14.6 X 21P RH	SS	4	Q4	48-8M0103530	857028A46	(2)
22-24 / 6.7-7.3	56-62 / 90-100	14.6 X 23P RH	SS	4	Q4	48-8M0103532	857030A46	(2)

Length (ft/m)	Current MPH/KPH	Propeller Size	Matl	Blades	Style	Quicksilver P/N	OEM P/N	Hub System
LH Propellers (1)		15 X 16 LH	AL	4	Diamond 4	QA2183X	48-834851A45	(2)
		14 1/2 X 18 LH	AL	4	Diamond 4	QA2185X	48-834853A45	(2)
		14 X 20 LH	AL	4	Diamond 4	QA2187X	48-834855A45	(2)
		15 3/4 X 15 LH	SS	3	Thunderbolt	QS5003X	48-19841A46	(2)
		15 1/2 X 17 LH	SS	3	Thunderbolt	QS5005X	48-90159A46	(2)
		15 1/4 X 19 LH	SS	3	Thunderbolt	QS5007X	48-13701A46	(2)
		14 3/4 X 21 LH	SS	3	Thunderbolt	QS5009X	48-13703A46	(2)
		14.6 X 17P LH	SS	4	Q4	48-8M0103527	857025A46	(2)
		14.6 X 19P LH	SS	4	Q4	48-8M0103529	857027A46	(2)
		14.6 X 21P LH	SS	4	Q4	48-8M0103531	857029A46	(2)
		14.6 X 23P LH	SS	4	Q4	48-8M0103533	857031A46	(2)

(2) Use Flo-Torq II attaching hardware kit 835257Q1 Order separate, except on 400 HP and above applications use solid hub kit 835258Q2. Order separate.

Bravo Two 1988 and Newer - MerCruiser

•4.3L 155-250hp 1996 & Newer •5.0L 180-250hp 1995 & Newer
•5.7L 210-300hp 1993 & Newer •6.2L 320hp 2001 & Newer
•7.4L 300-385hp 1990 & Newer •454 385hp 1996 & Newer
•496 375-425hp 2001 & Newer •502 390-425hp 1996 & Newer
•D2.8L 150hp 1997 & Newer •D3.6L 180hp 1996 and Newer
•D4.2L 200-250hp 1996and Newer •D7.3L 260-300hp 1994 and Newer

Length (ft/m)	Current MPH/KPH	Prop Size	Matl	#Blades	Style	Quicksilver P/N	OEM P/N	Hub System
34-35/10.4-13.7	0-14/0-20	20 x 11 RH	AL	3	Black Diamond BII	48-8M0078084	48- 18606A40	Rubber Bushing
31-39/9.4-12	14-19/20-30	19 1/2 x 13 RH	AL	3	Black Diamond BII	48-8M0078086	48- 18608A40	Rubber Bushing
29-37/8.8-11.3	19-23/30-38	19 1/4 x 15 RH	AL	3	Black Diamond BII	48-8M0078088	48- 18610A40	Rubber Bushing
28-32/8.5-9.8	24-31/38-46	18 3/4 x 17 RH	AL	3	Black Diamond BII	48-8M0078090	48- 18612A40	Rubber Bushing
26-30/7.8-9.1	32-36/52-58	18 1/4 x 19 RH	AL	3	Black Diamond BII	QA1940R	48-18614A40	Rubber Bushing
25-28/7.5-8.5	35-40/56-65	17 3/4 x 21 RH	AL	3	Black Diamond BII	QA1946R	48-18616A40	Rubber Bushing
24-27/7.2-8.2	39-44/63-71	17 1/2 x 23 RH	AL	3	Black Diamond BII	QA1952R	48-18618A40	Rubber Bushing
23-25/7.0-8.0	42-47/65-73	17 1/4 x 25 RH	AL	3	Black Diamond BII	48-8M0078092	48- 18620A40	Rubber Bushing
LH Propellers(1)								
		20 x 11 LH	AL	3	Black Diamond BII	48-8M0078085	48- 18607A40	Rubber Bushing
		19 1/2 x 13 LH	AL	3	Black Diamond BII	48-8M0078087	48- 18609A40	Rubber Bushing
		19 1/4 x 15 LH	AL	3	Black Diamond BII	48-8M0078089	48- 18611A40	Rubber Bushing
		18 3/4 x 17 LH	AL	3	Black Diamond BII	48-8M0078091	48- 18613A40	Rubber Bushing
		18 1/4 x 19 LH	AL	3	Black Diamond BII	QA1941R	48-18615A40	Rubber Bushing
		17 3/4 x 21 LH	AL	3	Black Diamond BII	QA1947R	48-18617A40	Rubber Bushing
		17 1/2 x 23 LH	AL	3	Black Diamond BII	QA1953R	48-18619A40	Rubber Bushing
		17 1/4 x 25 LH	AL	3	Black Diamond BII	48-8M0078093	48- 18621A40	Rubber Bushing

(1) Add 4" of pitch to above application chart for twin engine installations

Bravo Three 1993 and Newer - MerCruiser

•4.3L 155-250hp 1996 & Newer •5.0L 180-250hp 1998 & Newer
•5.7L 210-300hp 1994 & Newer •6.2L 320hp 2001 & Newer
•7.4L 300-385hp 1993 & Newer •454 385hp 1995 & Newer
•496 375-425hp 2001 & Newer •502 390-425hp?1995 & Newer
•D2.8L 150hp 1997 & Newer •D3.6L 180hp 1996 and Newer
•D4.2L 200-250hp 1996 and Newer •D7.3L 260-300hp 1994 and Newer

Length (ft/m)	Current MPH/KPH	Prop Size	Matl	#Blades	Style	Quicksilver P/N	OEM P/N	Hub System
RH Propeller	(Rear Prop)(1)							
23-28/7.6-8.4	36-42/57-66	14 3/8 x 20 RH	SS	3	Thunderbolt BIII	QS3320S	48-823662A60	Solid Steel Spline
24-27/7.3-8.2	38-44/61-70	14 1/4 x 22 RH	SS	3	Thunderbolt BIII	QS3322S	48-823664A60	Solid Steel Spline
23-26/7.0-7.8	40-48/65-77	14 1/4 x 24 RH	SS	3	Thunderbolt BIII	QS3324S	48-823666A60	Solid Steel Spline
22-25/6.7-7.8	44-52/75-84	14 x 26 RH	SS	3	Thunderbolt BIII	QS3326S	48-823668A60	Solid Steel Spline
21-24/6.7-7.3	50-56/81-90	13 3/4 x 28 RH	SS	3	Thunderbolt BIII	QS3328S	48-823670A60	Solid Steel Spline
LH Propeller	(Front Prop) (1)							

QUICKSILVER PROPELLER APPLICATION CHARTS

Length (ft/m)	Current MPH/KPH	Prop Size	Matl	#Blades	Style	Quicksilver P/N	OEM P/N	Hub System
		16 x 20 LH	SS	3	Thunderbolt BIII	QS3321S	48-823661A60	Solid Steel Spline
		15 3/4 x 22 LH	SS	3	Thunderbolt BIII	QS3323S	48-823663A60	Solid Steel Spline
		15 1/2 x 24 LH	SS	3	Thunderbolt BIII	QS3325S	48-823665A60	Solid Steel Spline
		15 1/4 x 26 LH	SS	3	Thunderbolt BIII	QS3327S	48-823667A60	Solid Steel Spline
		15 x 28 LH	SS	3	Thunderbolt BIII	QS3329S	48-823669A60	Solid Steel Spline

(1) Add 4" of pitch to above application chart for twin engine installations.

OMC STERNDRIVE APPLICATION CHARTS

MODEL 400 AND COBRA - OMC

2.3 Litre 120-128 HP 1978-90
2.5 Litre 120 HP 1978-89
3.0 Litre 130-140 HP 1978-89

Length (ft/m)	Current MPH/KPH	Propeller Size	Matl	Blades	Style	Quicksilver P/N	OEM P/N	Hub System
Work	6-16 / 10-26	14 X 10 RH Extra Cup	AL	3	Black Diamond	QA3828X	382761	(1)
Pontoon	12-19 / 19-31	14 X 11 Extra Cup	AL	3	Black Diamond	QA3830X		(1)
House/Cruisers	14-26 / 23-42	14 X 13 RH Extra Cup	AL	3	Black Diamond	QA3832X	391668	(1)
19-22 / 5.8-6.7	24-32 / 39-52	13 3/4 X 15 RH	AL	3	Black Diamond	QA2208X	391198	(1)
17-20 / 5.2-6.1	30-40 / 48-65	13 1/4 X 17 RH	AL	3	Black Diamond	QA2206X	391199	(1)
17-20 / 5.2-6.1	30-40 / 48-65	13 1/8 X 16 RH	SS	3	Silverado	QS5136X	389949	(1)
16-19 / 4.8-5.8	34-42 / 55-68	13 X 18 RH	SS	3	Silverado	QS5138X	389948	(1)

(1) Use Flo-Torq II attaching hardware kit 835266Q1. Purchase separately.

SEA DRIVE 4 1/4" GEARCASE - OMC

1.6 Litre V-4 1983 & Newer
1.8 Litre V-4 1983 & Newer
Add 2" of pitch for twin engines

Length (ft/m)	Current MPH/KPH	Propeller Size	Matl	Blades	Style	Quicksilver P/N	OEM P/N	Hub System
Work/House		14 X 10 RH Extra Cup	AL	3	Black Diamond	QA3828X		(1)
Work/House	1-18 / 2-29	14 X 11 RH Extra Cup	AL	3	Black Diamond	QA3830X	382761	(1)
22-26 / 6.7-7.8	14-28 / 23-45	14 X 13 RH Extra Cup	AL	3	Black Diamond	QA3832X	391668	(1)
22-26 / 6.7-7.8	24-36 / 39-58	13 3/4 X 15 RH	AL	3	Black Diamond	QA2208X	391198	(1)
18-22 / 5.5-6.7	30-42 / 48-68	13 1/8 X 16 RH	SS	3	Silverado	QS5136X	389949	(1)
17-20 / 5.2-6.1	38-50 / 61-81	13 X 18 RH	SS	3	Silverado	QS5138X	389948	(1)

(1) Use Flo-Torq II attaching hardware kit 835266Q1. Purchase separately.

SEA DRIVE 4 3/4 INCH LARGE GEARCASE - OMC

•2.0 Litre V-4 1982 & Newer •2.5 Litre V-6 1982 & Newer
•2.6 Litre V-6 1982 & Newer •2.7 Litre V-6 1982 & Newer
•3.0 Litre V-6 1982 & Newer •3.6 Litre V-8 1982 & Newer
•4.0 Litre V-8 1982 & Newer
Following suggestions based on twin engines - Deduct 4" of pitch for single engine applications.

Length (ft/m)	Current MPH/KPH	Propeller Size	Matl	Blades	Style	Quicksilver P/N	OEM P/N	Hub System
Work / House	to 26 / to 42	14 X 12 RH	AL	4	Nemesis	48-8M0055531		(2)
Work / House	to 29 / to 46	14 X 14 RH	AL	4	Nemesis	48-8M0055533		(2)
22-26 / 6.7-7.9	36-41 / 58-66	14 X 17 RH	AL	4	Nemesis	48-8M0055534		(2)
21-25 / 6.4-7.6	41-46 / 66-74	14 X 19 RH	AL	4	Nemesis	48-8M0055535		(2)
19-23 / 5.8-7.0	46-51 / 74-82	14 X 21 RH	AL	4	Nemesis	48-8M0055536		(2)
to 20 / to 6.1	51-56 / 74-90	14 X 23 RH	AL	4	Nemesis	48-8M0055537		(2)
Work/House	to 13 / to 21	16 X 11 RH	AL	3	Black Diamond	QA2000X		(2)

Length (ft/m)	Current MPH/KPH	Propeller Size	Matl	Blades	Style	Quicksilver P/N	OEM P/N	Hub System
Work/House	13-27 / 21-43	16 X 13 RH	AL	3	Black Diamond	QA2004X	391536	(2)
Work/House	16-29 / 26-47	16 X 14 RH	AL	3	Black Diamond	QA2006X		(2)
32-36 / 9.6-10.9 (Twin)	24-34 / 39-55	15 1/2 X 15 RH	AL	3	Black Diamond	QA2008X	391535	(2)
30-33 / 9.1-10.0 (Twin)	30-40 / 48-65	15 X 17 RH	AL	3	Black Diamond	QA1912X	391200	(2)
28-32 / 8.5-9.6	33-45 / 53-72	15 1/2 X 18 RH	AL	3	Black Diamond	QA2014X		(2)
27-30 / 8.2-9.1 (Twin)	36-47 / 58-76	14 1/2 X 19 RH	AL	3	Black Diamond	QA1916X	391201	(2)
25-28 / 7.5-8.5 (Twin)	42-54 / 68-87	14 1/4 X 21 RH	AL	3	Black Diamond	QA1918X	391202	(2)
23-25 / 6.9-7.6 (Twin)	50-62 / 81-100	14 X 23 RH	AL	3	Black Diamond	QA1920X	391203	(2)
30-33 / 9.1-10.0 (Twin)	30-40 / 48-65	15 X 16 RH	AL	4	Diamond 4	QA2182X		(2)
27-30 / 8.2-9.1 (Twin)	36-47 / 58-76	14 1/2 X 18 RH	AL	4	Diamond 4	QA2184X		(2)
25-28 / 7.5-8.5 (Twin)	42-54 / 68-87	14 X 20 RH	AL	4	Diamond 4	QA2186X		(2)
32-36 / 9.6-10.9 (Twin)	24-34 / 39-55	14 1/2 X 15 RH	SS	3	Silverado	QS5050X	174926	(2)
30-33 / 9.1-10.0 (Twin)	30-40 / 48-65	14 1/2 X 17 RH	SS	3	Silverado	QS5052X	176615	(2)
27-30 / 8.2-9.1 (Twin)	36-47 / 58-76	14 X 19 RH	SS	3	Silverado	QS5054X	176617	(2)
25-28 / 7.5-8.5 (Twin)	42-54 / 68-87	13 3/4 X 21 RH	SS	3	Silverado	QS5056X	176619	(2)
30-33 / 9.1-10.0 (Twin)	30-40 / 48-65	13 1/2 X 17 RH	SS	5	QST 5	QS1154X		(2)
27-30 / 8.2-9.1 (Twin)	36-47 / 58-76	13 1/3 X 19 RH	SS	5	QST 5	QS5758X		(2)
25-28 / 7.5-8.5 (Twin)	42-54 / 68-87	13 1/3 X 21 RH	SS	5	QST 5	QS5760X		(2)
32-36 / 9.6-10.9 (Twin)	24-34 / 39-55	15 3/4 X 15 RH	SS	3	Thunderbolt	QS5002X		(2)
30-33 / 9.1-10.0 (Twin)	30-40 / 48-65	15 1/2 X 17 RH	SS	3	Thunderbolt	QS5004X		(2)
27-30 / 8.2-9.1 (Twin)	36-47 / 58-76	15 1/4 X 19 RH	SS	3	Thunderbolt	QS5006X		(2)
25-28 / 7.5-8.5 (Twin)	42-54 / 68-87	14 3/4 X 21 RH	SS	3	Thunderbolt	QS5008X		(2)
Work/House	to 13 / to 21	16 X 11P RH	SS	3	Q3	48-8M0103516		(2)
Work/House	13-27 / 16-40	15.6 X 13P RH	SS	3	Q3	48-8M0103517		(2)
Work/House	16-29 / 21-43	15.3 X 14P RH	SS	3	Q3	48-8M0103518		(2)
32-36 / 9.6-10.9 (Twin)	24-34 / 26-47	15 X 15P RH	SS	3	Q3	48-8M0103519		(2)
32-36 / 9.6-10.9 (Twin)	26-38 / 30-51	14.7 X 16P RH	SS	3	Q3	48-8M0103520		(2)
30-33 / 9.1-10 (Twin)	30-40 / 39-55	14.5 X 17P RH	SS	3	Q3	48-8M0103521		(2)
28-32 / 8.5-9.6 (Twin)	33-45 / 48-65	14.2 X 18P RH	SS	3	Q3	48-8M0103522		(2)
27-30 / 8.2-9.1 (Twin)	36-47 / 53-75	14 X 19P RH	SS	3	Q3	48-8M0103523		(2)
27-30 / 8.2-9.1 (Twin)	38-49 / 55-75	13.8 X 20P RH	SS	3	Q3	48-8M0103524		(2)
25-28 / 7.5-8.5 (Twin)	42-54 / 58-76	13.6 X 21P RH	SS	3	Q3	48-8M0103525		(2)
30-33 / 9.1-10 (Twin)	30-40 / 39-55	14.6 X 17P RH	SS	4	Q4	48-8M0103526		(2)
27-30 / 8.2-9.1 (Twin)	36-47 / 53-75	14.6 X 19P RH	SS	4	Q4	48-8M0103528		(2)
25-28 / 7.5-8.5 (Twin)	42-54 / 58-76	14.6 X 21P RH	SS	4	Q4	48-8M0103530		(2)
23-25 / 6.9-7.6 (Twin)	50-62 / 81-100	14.6 X 23P RH	SS	4	Q4	48-8M0103532		(2)
LH Propellers (1)		15 X 16 LH	AL	4	Diamond 4	QA2183X		(2)
		14 1/2 X 18 LH	AL	4	Diamond 4	QA2185X		(2)
		14 X 20 LH	AL	4	Diamond 4	QA2187X		(2)
		15 3/4 X 15 LH	SS	3	Thunderbolt	QS5003X		(2)
		15 1/2 X 17 LH	SS	3	Thunderbolt	QS5005X		(2)
		15 1/4 X 19 LH	SS	3	Thunderbolt	QS5007X		(2)
		14 3/4 X 21 LH	SS	3	Thunderbolt	QS5009X		(2)
		14.6 X 17P LH	SS	4	Q4	48-8M0103527		(2)
		14.6 X 19P LH	SS	4	Q4	48-8M0103529		(2)

QUICKSILVER PROPELLER APPLICATION CHARTS

Length (ft/m)	Current MPH/KPH	Propeller Size	Matl	Blades	Style	Quicksilver P/N	OEM P/N	Hub System
		14.6 X 21P LH	SS	4	Q4	48-8M0103531		(2)
		14.6 X 23P LH	SS	4	Q4	48-8M0103533		(2)

(2) Use Flo-Torq II attaching hardware kit 835265Q02 for 1991 and newer applications and Flo-Torq II kit 835267Q1 for 1990 and older models. Purchase separately.

MODEL 800 COBRA AND KING COBRA - OMC

•3.0 Litre 1990-93 •3.2 Litre Diesel 1992-93
•3.8 Litre 1978-93 •4.3 Litre 1985-93
•5.0 Litre 1978-93 •5.7 Litre 1978-93
•5.8 Litre 1978-93 •454 King (7.4 Litre) 1990-93
•7.4 Litre 1987-93 •502 King (8.2 litre) 1990-93
•7.5 Litre 1987-93
See Volvo SX section for 1994 and newer OMC sterndrive applications.

Length (ft/m)	Current MPH/KPH	Propeller Size	Matl	Blades	Style	Quicksilver P/N	OEM P/N	Hub System
Work / House	to 26 / to 42	14 X 12 RH	AL	4	Nemesis	48-8M0055531		(2)
Work / House	to 29 / to 46	14 X 14 RH	AL	4	Nemesis	48-8M0055533		(2)
22-26 / 6.7-7.9	36-41 / 58-66	14 X 17 RH	AL	4	Nemesis	48-8M0055534		(2)
21-25 / 6.4-7.6	41-46 / 66-74	14 X 19 RH	AL	4	Nemesis	48-8M0055535		(2)
19-23 / 5.8-7.0	46-51 / 74-82	14 X 21 RH	AL	4	Nemesis	48-8M0055536		(2)
to 20 / to 6.1	51-56 / 74-90	14 X 23 RH	AL	4	Nemesis	48-8M0055537		(2)
Work/House	to 15 / 24	16 X 11 RH	AL	3	Black Diamond	QA2000X		(2)
Heavy Cruisers	12-27 / 19-43	16 X 12 RH	AL	3	Black Diamond			(2)
Non Planing	22-30 / 36-48	16 X 13 RH	AL	3	Black Diamond	QA2004X	391536	(2)
Non Planing	24-33 / 39-53	16 X 14 RH	AL	3	Black Diamond	QA2006X		(2)
24-28 / 7.2-8.5	26-36 / 42-58	15 1/2 X 15 RH	AL	3	Black Diamond	QA2008X	391535	(2)
21-27 / 6.4-8.2	34-44 / 55-71	15 X 17 RH	AL	3	Black Diamond	QA1912X	391200	(2)
19-25 / 5.8-7.6	37-47 / 60-76	15 1/2 X 18 RH	AL	3	Black Diamond	QA2014X		(2)
17-22 / 5.2-6.7	39-50 / 63-81	14 1/2 X 19 RH	AL	3	Black Diamond	QA1916X	391201	(2)
16-21 / 4.8-6.4	44-57 / 71-92	14 1/4 X 21 RH	AL	3	Black Diamond	QA1918X	391202	(2)
15-20 / 4.5-6.1	48-62 / 77-100	14 X 23 RH	AL	3	Black Diamond	QA1920X	391203	(2)
21-27 / 6.4-8.2	34-44 / 55-71	15 X 16 RH	AL	4	Diamond 4	QA2182X		(2)
17-22 / 5.2-6.7	39-50 / 63-81	14 1/2 X 18 RH	AL	4	Diamond 4	QA2184X		(2)
16-21 / 4.8-6.4	44-57 / 71-92	14 X 20 RH	AL	4	Diamond 4	QA2186X		(2)
24-28 / 7.2-8.5	26-36 / 42-58	14 1/2 X 15 RH	SS	3	Silverado	QS5050X	174926	(2)
21-27 / 6.4-8.2	34-44 / 55-71	14 1/2 X 17 RH	SS	3	Silverado	QS5052X	176615	(2)
17-22 / 5.2-6.7	39-50 / 63-81	14 X 19 RH	SS	3	Silverado	QS5054X	176617	(2)
16-21 / 4.8-6.4	44-57 / 71-92	13 3/4 X 21 RH	SS	3	Silverado	QS5056X	176619	(2)
21-27 / 6.4-8.2	34-44 / 55-71	13 1/2 X 17 RH	SS	5	QST 5	QS1154X		(2)
17-22 / 5.2-6.7	39-50 / 63-81	13 1/3 X 19 RH	SS	5	QST 5	QS5758X		(2)
16-21 / 4.8-6.4	44-57 / 71-92	13 1/3 X 21 RH	SS	5	QST 5	QS5760X		(2)
24-28 / 7.2-8.5	26-36 / 42-58	15 3/4 X 15 RH	SS	3	Thunderbolt	QS5002X		(2)
21-27 / 6.4-8.2	34-44 / 55-71	15 1/2 X 17 RH	SS	3	Thunderbolt	QS5004X		(2)
17-22 / 5.2-6.7	39-50 / 63-81	15 1/4 X 19 RH	SS	3	Thunderbolt	QS5006X		(2)
16-21 / 4.8-6.4	44-57 / 71-92	14 3/4 X 21 RH	SS	3	Thunderbolt	QS5008X		(2)
Work/House	to 15 / to 24	16 X 11P RH	SS	4	Q3	48-8M0103516		(2)
Non Planing	22-30 / 36-48	15.6 X 13P RH	SS	3	Q3	48-8M0103517		(2)
Non Planing	24-33 / 39-53	15.3 X 14P RH	SS	3	Q3	48-8M0103518		(2)
24-28 / 7.2-8.5	26-36 / 42-58	15 X 15P RH	SS	3	Q3	48-8M0103519		(2)
24-28 / 7.2-8.5	29-40 / 47-63	14.7 X 16P RH	SS	3	Q3	48-8M0103520		(2)
21-27 / 6.4-8.2	34-44 / 55-71	14.5 X 17P RH	SS	3	Q3	48-8M0103521		(2)
19-25 / 5.8-7.6	37-47 / 60-76	14.2 X 18P RH	SS	3	Q3	48-8M0103522		(2)
17-22 / 5.2-6.7	39-50 / 63-81	14 X 19P RH	SS	3	Q3	48-8M0103523		(2)
17-22 / 5.2-6.7	42-53 / 68-86	13.8 X 20P RH	SS	3	Q3	48-8M0103524		(2)
16-21 / 4.8-6.4	44-57 / 71-92	13.6 X 21P RH	SS	3	Q3	48-8M0103525		(2)
21-27 / 6.4-8.2	34-44 / 55-71	14.6 X 17P RH	SS	4	Q4	48-8M0103525		(2)

QUICKSILVER PROPELLER APPLICATION CHARTS

Length (ft/m)	Current MPH/KPH	Propeller Size	Matl	Blades	Style	Quicksilver P/N	OEM P/N	Hub System
17-22 / 5.2-6.7	39-50 / 63-81	14.6 X 19P RH	SS	4	Q4	48-8M0103528		(2)
16-21 / 4.8-6.4	44-57 / 71-92	14.6 X 21P RH	SS	4	Q4	48-8M0103530		(2)
15-20 / 4.5-6.1	48-62 / 77-100	14.6 X 23P RH	SS	4	Q4	48-8M0103532		(2)
LH Propellers (1)		15 X 16 LH	AL	4	Diamond 4	QA2183X		(2)
		14 1/2 X 18 LH	AL	4	Diamond 4	QA2185X		(2)
		14 X 20 LH	AL	4	Diamond 4	QA2187X		(2)
		15 3/4 X 15 RH	SS	3	Thunderbolt	QS5003X		(2)
		15 1/2 X 17 LH	SS	3	Thunderbolt	QS5005X		(2)
		15 1/4 X 19 LH	SS	3	Thunderbolt	QS5007X		(2)
		14 3/4 X 21 LH	SS	3	Thunderbolt	QS5009X		(2)
		14.6 X 17P LH	SS	4	Q4	48-8M0103527		
		14.6 X 19P LH	SS	4	Q4	48-8M0103529		
		14.6 X 21P LH	SS	4	Q4	48-8M0103531		
		14.6 X 23P LH	SS	4	Q4	48-8M0103533		

(2) Use Flo-Torq II attaching hardware kit 835265Q02 for 1991 and newer applications and Flo-Torq II kit 835267Q1 for 1990 and older models. Purchase separately.

VOLVO PENTA STERNDRIVE APPLICATION CHARTS

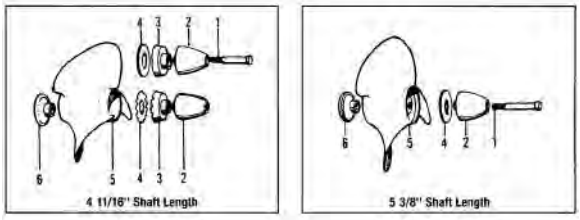

Short Hub Installation
1 Bolt
2 Propeller Cone
3 Spacer
4 Lock Tab Washer/Nylon Washer
5 Propeller
6 Fish Line Cutter

Long Hub Installation
1 Bolt
2 Propeller Cone
4 Nylon Washer
5 Propeller
6 Fish Line Cutter

VOLVO PENTA SX

SX COBRA
OMC COBRA 1994 & NEWER
3.0 Litre 1994 & Newer
4.3 Litre 1994 & Newer
5.0 Litre 1994 & Newer
5.7 Litre 1994 & Newer
5.8 Litre 1994-97
7.4 Litre 1997 & Newer
8.2 Litre 1997
LARGE 4 3/4" GEARCASE - 19 SPLINE
Caution! When installing stainless steel propellers remove anode attached to bearing carrier and check clearance before operation.

Length (ft/m)	Current MPH/KPH	Propeller Size	Matl	Blades	Style	Quicksilver P/N	OEM P/N	Hub System
Work / House	to 26 / to 42	14 X 12 RH	AL	4	Nemesis	48-8M0055531		(2)
Work / House	to 29 / to 46	14 X 14 RH	AL	4	Nemesis	48-8M0055533		(2)
22-26 / 6.7-7.9	36-41 / 58-66	14 X 17 RH	AL	4	Nemesis	48-8M0055534		(2)
21-25 / 6.4-7.6	41-46 / 66-74	14 X 19 RH	AL	4	Nemesis	48-8M0055535		(2)
19-23 / 5.8-7.0	46-51 / 74-82	14 X 21 RH	AL	4	Nemesis	48-8M0055536		(2)

QUICKSILVER PROPELLER APPLICATION CHARTS

Length (ft/m)	Current MPH/KPH	Propeller Size	Matl	Blades	Style	Quicksilver P/N	OEM P/N	Hub System
to 20 / to 6.1	51-56 / 74-90	14 X 23 RH	AL	4	Nemesis	48-8M0055537		(2)
Work/House	to 15 / 24	16 X 11 RH	AL	3	Black Diamond	QA2000X		(2)
Non Planing	22-30 / 35-48	16 X 13 RH	AL	3	Black Diamond	QA2004X	3850298-5	(2)
Non Planing	24-33 / 39-53	16 X 14 RH	AL	3	Black Diamond	QA2006X		(2)
24-28 / 7.3-8.5	26-36 / 42-58	15 1/2 X 15 RH	AL	3	Black Diamond	QA2008X	3850299-3	(2)
20-27 / 6.1-8.2	34-44 / 55-71	15 X 17 RH	AL	3	Black Diamond	QA1912X	3850300-9	(2)
19-25 / 5.8-7.6	37-47 / 60-76	15 1/2 X 18 RH	AL	3	Black Diamond	QA2014X		(2)
17-22 / 5.2-6.7	39-50 / 63-81	14 1/2 X 19 RH	AL	3	Black Diamond	QA1916X	3850301-7	(2)
16-20 / 4.8-6.1	44-57 / 55-92	14 1/4 X 21 RH	AL	3	Black Diamond	QA1918X	3850302-5	(2)
15-20 / 4.5-6.1	48-62 / 77-100	14 X 23 RH	AL	3	Black Diamond	QA1920X	3850303-3	(2)
20-27 / 6.1-8.2	34-44 / 55-71	15 X 16 RH	AL	4	Diamond 4	QA2182X		(2)
17-22 / 5.2-6.7	39-50 / 63-81	14 1/2 X 18 RH	AL	4	Diamond 4	QA2184X		(2)
16-20 / 4.8-6.1	44-57 / 55-92	14 X 20 RH	AL	4	Diamond 4	QA2186X		(2)
24-28 / 7.3-8.5	26-36 / 42-58	14 1/2 X 15 RH	SS	3	Silverado	QS5050X	3850305-8	(2)
20-27 / 6.1-8.2	34-44 / 55-71	14 1/2 X 17 RH	SS	3	Silverado	QS5052X	3850307-7	(2)
17-22 / 5.2-6.7	39-50 / 63-81	14 X 19 RH	SS	3	Silverado	QS5054X	3850308-2	(2)
16-20 / 4.8-6.1	44-57 / 55-92	13 3/4 X 21 RH	SS	3	Silverado	QS5056X	3850309-0	(2)
20-27 / 6.1-8.2	34-44 / 55-71	13 1/2 X 17 RH	SS	5	QST 5	QS1154X		(2)
17-22 / 5.2-6.7	39-50 / 63-81	13 1/3 X 19 RH	SS	5	QST 5	QS5758X		(2)
16-20 / 4.8-6.1	44-57 / 55-92	13 1/3 X 21 RH	SS	5	QST 5	QS5760X		(2)
24-28 / 7.3-8.5	26-36 / 42-58	15 3/4 X 15 RH	SS	3	Thunderbolt	QS5002X		(2)
20-27 / 6.1-8.2	34-44 / 55-71	15 1/2 X 17 RH	SS	3	Thunderbolt	QS5004X		(2)
17-22 / 5.2-6.7	39-50 / 63-81	15 1/4 X 19 RH	SS	3	Thunderbolt	QS5006X		(2)
16-20 / 4.8-6.1	44-57 / 55-92	14 3/4 X 21 RH	SS	3	Thunderbolt	QS5008X		(2)
Work/House	to 15 / to 24	16 X 11P RH	SS	3	Q3	48-8M0103516		(2)
Non Planing	22-30 / 36-48	15.6 X 13P RH	SS	3	Q3	48-8M0103517		(2)
Non Planing	24-33 / 39-53	15.3 X 14P RH	SS	3	Q3	48-8M0103518		(2)
24-28 / 7.2-8.5	26-36 / 42-58	15 X 15P RH	SS	3	Q3	48-8M0103519		(2)
24-28 / 7.2-8.5	29-40 / 47-63	14.7 X 16P RH	SS	3	Q3	48-8M0103520		(2)
21-27 / 6.4-8.2	34-44 / 55-71	14.5 X 17P RH	SS	3	Q3	48-8M0103521		(2)
19-25 / 5.8-7.6	37-47 / 60-76	14.2 X 18P RH	SS	3	Q3	48-8M0103522		(2)
17-22 / 5.2-6.7	39-50 / 63-81	14 X 19P RH	SS	3	Q3	48-8M0103523		(2)
(2)17-22 / 5.2-6.7	42-53 / 68-86	13.8 X 20P RH	SS	3	Q3	48-8M0103524		(2)
16-(2)21 / 4.8-6.4	44-57 / 71-92	13.6 X 21P RH	SS	3	Q3	48-8M0103525		(2)
21-27 / 6.4-8.2	34-44 / 55-71	14.6 X 17P RH	SS	4	Q4	48-8M0103526		(2)
17-22 / 5.2-6.7	39-50 / 63-81	14.6 X 19P RH	SS	4	Q4	48-8M0103528		(2)
16-21 / 4.8-6.4	44-57 / 71-92	14.6 X 21P RH	SS	4	Q4	48-8M0103530		(2)
15-20 / 4.5-6.1	48-62 / 77-100	14.6 X 23P RH	SS	4	Q4	48-8M0103530		(2)
LH Propellers (1)		15 X 16 LH	AL	4	Diamond 4	QA2183X		(2)
		14 1/2 X 18 LH	AL	4	Diamond 4	QA2185X		(2)
		14 X 20 LH	AL	4	Diamond 4	QA2187X		(2)
		15 3/4 X 15 LH	SS	3	Thunderbolt	QS5003X		(2)
		15 1/2 X 17 LH	SS	3	Thunderbolt	QS5005X		(2)
		15 1/4 X 19 LH	SS	3	Thunderbolt	QS5007X		(2)
		14 3/4 X 21 LH	SS	3	Thunderbolt	QS5009X		(2)
		14.6 X 17P LH	SS	4	Q4	48-8M0103527		(2)
		14.6 X 19P LH	SS	4	Q4	48-8M0103529		(2)
		14.6 X 21P LH	SS	4	Q4	48-8M0103531		(2)
		14.6 X 23P LH	SS	4	Q4	48-8M0103533		(2)

(2) Use Flo-Torq II attaching hardware kit 835270Q1. Purchase separately.

Volvo Penta DPS Duo Prop

Any HP
All Years

Pitch	Material	Finish	Blades (Front & Rear)	LH Rotation Front Prop	RH Rotation Rear Prop	Model
19	SS	Matte	4 & 3	48-8M8026210	48-8M8026220	Quicksilver Thunderbolt
20	SS	Matte	4 & 3	48-8M8026230	48-8M8026240	Quicksilver Thunderbolt
21	SS	Matte	4 & 3	48-8M8026250	48-8M8026260	Quicksilver Thunderbolt
22.5	SS	Matte	4 & 3	48-8M8026270	48-8M8026280	Quicksilver Thunderbolt
24	SS	Matte	4 & 3	48-8M8026290	48-8M8026300	Quicksilver Thunderbolt
26	SS	Matte	4 & 3	48-8M8026310	48-8M8026320	Quicksilver Thunderbolt
28	SS	Matte	4 & 3	48-8M8026330	48-8M8026340	Quicksilver Thunderbolt

Volvo Penta IPS Duo Prop

Any HP
All Years
Suitable Replacement for Volvo Penta Type T propellers

Size	Material	Finish	Blades (Front & Rear)	Front Prop	Rear Prop	Model
7	SS	Matte	3 & 4	48-8M8026470	48-8M8026480	Quicksilver Thunderbolt
5	SS	Matte	3 & 4	48-8M8026430	48-8M8026440	Quicksilver Thunderbolt
4	SS	Matte	3 & 4	48-8M8026410	48-8M8026420	Quicksilver Thunderbolt
3	SS	Matte	3 & 4	48-8M8026390	48-8M8026400	Quicksilver Thunderbolt

YAMAHA STERNDRIVE APPLICATION CHART

V-6/V-8 - 4 3/4" GEARCASE - Yamaha

3.0 Liter 1989-93
4.3 liter 1989-93
5.0 Liter 1989-93
5.7 Liter 1989-93
7.4 Liter 1992-93
130-300 HP - V-6/V-8 - 4 3/4" GEARCASE

Length (ft/m)	Current MPH/KPH	Propeller Size	Matl	Blades	Style	Quicksilver P/N	OEM P/N	Hub System
Work / House	to 26 / to 42	14 X 12 RH	AL	4	Nemesis	48-8M0055531		(2)
Work / House	to 29 / to 46	14 X 14 RH	AL	4	Nemesis	48-8M0055533		(2)
22-26 / 6.7-7.9	36-41 / 58-66	14 X 17 RH	AL	4	Nemesis	48-8M0055534		(2)
21-25 / 6.4-7.6	41-46 / 66-74	14 X 19 RH	AL	4	Nemesis	48-8M0055535		(2)
19-23 / 5.8-7.0	46-51 / 74-82	14 X 21 RH	AL	4	Nemesis	48-8M0055536		(2)
to 20 / to 6.1	51-56 / 74-90	14 X 23 RH	AL	4	Nemesis	48-8M0055537		(2)
24+ / 7.3+	to 10 / to 16	16 X 11 RH	AL	3	Black Diamond	QA2000X		(2)
23-27 / 7.0-8.2	15-18 / 24-29	16 X 12 RH	AL	3	Black Diamond			(2)
23-27 / 7.0-8.2	15-18 / 24-29	16 X 13 RH	AL	3	Black Diamond	QA2004X		(2)
21-25 / 6.4-7.6	22-26 / 36-42	16 X 14 RH	AL	3	Black Diamond	QA2006X		(2)
22-27 / 6.7-8.2	23-36 / 37-58	15 1/2 X 15 RH	AL	3	Black Diamond	QA2008X	6G5-45941-00-98	(2)
22-26 / 6.7-7.8	26-40 / 42-64	16 X 16 RH	AL	3	Black Diamond	QA2010X	6G5-45952-00-98	(2)
21-25 / 6.4-7.6	30-46 / 48-74	15 X 17 RH	AL	3	Black Diamond	QA1912X		(2)
18-22 / 5.5-6.7	32-38 / 52-61	15 1/2 X 18 RH	AL	3	Black Diamond	QA2014X		(2)
19-23 / 5.8-7.0	35-51 / 56-82	14 1/2 X 19 RH	AL	3	Black Diamond	QA1916X		(2)
18-21 / 5.5-6.4	40-56 / 64-90	14 1/4 X 21 RH	AL	3	Black Diamond	QA1918X		(2)
17-20 / 5.2-6.1	44-62 / 71-100	14 X 23 RH	AL	3	Black Diamond	QA1920X	6G5-45949-00-98	(2)
21-25 / 6.4-7.6	30-46 / 48-74	15 X 16 RH	AL	4	Diamond 4	QA2182X		(2)
19-23 / 5.8-7.0	35-51 / 56-82	14 1/2 X 18 RH	AL	4	Diamond 4	QA2184X		(2)
18-21 / 5.5-6.4	40-56 / 64-90	14 X 20 RH	AL	4	Diamond 4	QA2186X		(2)
22-27 / 6.7-8.2	23-36 / 37-58	14 1/2 X 15 RH	SS	3	Silverado	QS5050X	6G5-45970-02-98	(2)

QUICKSILVER PROPELLER APPLICATION CHARTS

Length (ft/m)	Current MPH/KPH	Propeller Size	Matl	Blades	Style	Quicksilver P/N	OEM P/N	Hub System
21-25 / 6.4-7.6	30-46 / 48-74	14 1/2 X 17 RH	SS	3	Silverado	QS5052X	6G5-45978-03-98	(2)
19-23 / 5.8-7.0	35-51 / 56-82	14 X 19 RH	SS	3	Silverado	QS5054X	6G5-45974-03-98	(2)
18-21 / 5.5-6.4	40-56 / 64-90	13 3/4 X 21 RH	SS	3	Silverado	QS5056X	6G5-45972-02-98	(2)
21-25 / 6.4-7.6	30-46 / 48-74	13 1/2 X 17 RH	SS	5	QST 5	QS1154X		(2)
19-23 / 5.8-7.0	35-51 / 56-82	13 1/3 X 19 RH	SS	5	QST 5	QS5758X		(2)
18-21 / 5.5-6.4	40-56 / 64-90	13 1/3 X 21 RH	SS	5	QST 5	QS5760X		(2)
22-27 / 6.7-8.2	23-36 / 37-58	15 3/4 X 15 RH	SS	3	Thunderbolt	QS5002X		(2)
21-25 / 6.4-7.6	30-46 / 48-74	15 1/2 X 17 RH	SS	3	Thunderbolt	QS5004X	6R4-45978-A0-00	(2)
19-23 / 5.8-7.0	35-51 / 56-82	15 1/4 X 19 RH	SS	3	Thunderbolt	QS5006X	6R4-45970-A0-00	(2)
18-21 / 5.5-6.4	40-56 / 64-90	14 3/4 X 21 RH	SS	3	Thunderbolt	QS5008X	6R4-45972-A0-00	(2)
24+ / 7.3+	to 10 / to 16		SS	3	Q3	48-8M0103516		(2)
23-27 / 7-8.2	15-18 / 24-29		SS	3	Q3	48-8M0103517		(2)
21-25 / 6.4-7.6	22-26 / 36-42		SS	3	Q3	48-8M0103518		(2)
22-27 / 6.7-8.2	23-36 / 37-58		SS	3	Q3	48-8M0103519		(2)
22-26 / 6.7-7.8	26-40 / 42-64		SS	3	Q3	48-8M0103520		(2)
21-25 / 6.4-7.6	30-46 / 48-74		SS	3	Q3	48-8M0103521		(2)
18-22 / 5.5-6.7	32-38 / 52-61		SS	3	Q3	48-8M0103522		(2)
19-23 / 5.8-7	35-51 / 56-82		SS	3	Q3	48-8M0103523		(2)
19-23 / 5.8-7	32-52 / 59-87		SS	3	Q3	48-8M0103524		(2)
18-21 / 5.5-6.4	40-56 / 64-90		SS	3	Q3	48-8M0103525		(2)
21-25 / 6.4-7.6	30-46 / 48-74	14.6 X 17P RH	SS	4	Q4	48-8M0103526		(2)
19-23 / 5.8-7	35-51 / 56-82	14.6 X 19P RH	SS	4	Q4	48-8M0103528		(2)
18-21 / 5.5-6.4	40-56 / 64-90	14.6 X 21P RH	SS	4	Q4	48-8M0103530		(2)
17-20 / 5.2-6.1	44-62 / 71-100	14.6 X 23P RH	SS	4	Q4	48-8M0103532		(2)
LH Propellers (1)		15 X 16 LH	AL	4	Diamond 4	QA2183X		(2)
		14 1/2 X 18 LH	AL	4	Diamond 4	QA2185X		(2)
		14 X 20 LH	AL	4	Diamond 4	QA2187X		(2)
		15 3/4 X 15 LH	SS	3	Thunderbolt	QS5003X		(2)
		15 1/2 X 17 LH	SS	3	Thunderbolt	QS5005X	6R1-45978-A0-00	(2)
		15 1/4 X 19 LH	SS	3	Thunderbolt	QS5007X	6R1-45970-A0-00	(2)
		14 3/4 X 21 LH	SS	3	Thunderbolt	QS5009X	6R1-45972-A0-00	(2)
		14.6 X 17P LH	SS	4	Q4	48-8M0103527		(2)
		14.6 X 17P LH	SS	4	Q4	48-8M0103529		(2)
		14.6 X 17P LH	SS	4	Q4	48-8M0103531		(2)
		14.6 X 17P LH	SS	4	Q4	48-8M0103533		(2)

(2) Use Flo-Torq II attaching hardware kit 835271Q2. Purchase separately.

QUICKSILVER PROPELLER TYPE

Propellers sorted by Pitch, then Diameter, then by Rotation (Right-hand, Left-hand)

QUICKSILVER OUTBOARD PROPELLER SELECTOR CHART

Quicksilver Propeller selector by family for Outboards

Inflatable

Under 16'

Model/Horsepower	Aluminum Propeller	Stainless Steel Propeller
4-15 HP	Black Diamond	
20-40 HP	Black Diamond, Nemesis	Silverado

Aluminum

(under 14')

Model/Horsepower	Aluminum Propeller	Stainless Steel Propeller
4-15 HP	Black Diamond	
20-40 HP	Black Diamond, Nemesis	Silverado

Aluminum

(14-21')

Model/Horsepower	Aluminum Propeller	Stainless Steel Propeller
4-15 HP	Black Diamond	
20-60 HP	Black Diamond, Nemesis	Silverado
70-250 HP	Black Diamond, Nemesis	Silverado, Q3, Q4, QST 5

Fiberglass

to 14'

Model/Horsepower	Aluminum Propeller	Stainless Steel Propeller
4-15 HP	Black Diamond	
20-40 HP	Black Diamond, Nemesis	Silverado

Fiberglass Runabout/Ski Boat/Inflatable RIB

14-17' (closed deck or bowrider, same hull...)

Model/Horsepower	Aluminum Propeller	Stainless Steel Propeller
30-60 HP	Black Diamond, Nemesis	Silverado
70-150 HP	Black Diamond, Nemesis	Silverado, Q3

Fiberglass Fish-Type

14-17' (fish & ski, side console, center console)

Model/Horsepower	Aluminum Propeller	Stainless Steel Propeller
30-60 HP	Black Diamond, Nemesis	Silverado
75-150 HP	Black Diamond, Nemesis	Silverado, Q3

Fiberglass Bass

14-17'

Model/Horsepower	Aluminum Propeller	Stainless Steel Propeller
30-60 HP	Black Diamond, Nemesis	Silverado
75-150 HP	Black Diamond, Nemesis	Silverado, Q3, Torrent, QST 5

Fiberglass Runabout/Ski Boat/Inflatable RIB

17-21' (closed deck or bowrider, same hull...)

Model/Horsepower	Aluminum Propeller	Stainless Steel Propeller
75-140 HP	Black Diamond, Nemesis	Silverado, Lightspeed
150-250 HP	Black Diamond, Diamond 4, Nemesis	Silverado, Q3, Q4, Thunderbolt, QST 5

Fiberglass Fish-Type

17-21' (fish & ski, side console, center console, cuddy)

Model/Horsepower	Aluminum Propeller	Stainless Steel Propeller
75-140 HP	Black Diamond, Nemesis	Silverado, Lightspeed
150-250 HP	Black Diamond, Nemesis	Silverado, Q3, Q4, Thunderbolt, QST 5

Fiberglass Bass

17-21'

Model/Horsepower	Aluminum Propeller	Stainless Steel Propeller
75-140 HP	Black Diamond, Nemesis	Silverado, Lightspeed
150-250 HP	Black Diamond, Nemesis	Silverado, Q3, Torrent, QST 5

Fiberglass Fishing

21' + (side console, center console, cuddy)

Model/Horsepower	Aluminum Propeller	Stainless Steel Propeller
150-250 HP	Black Diamond, Nemesis	Silverado, Q3, Q4, Thunderbolt, QST 5

Aluminum Pontoon

16-28'

Model/Horsepower	Aluminum Propeller	Stainless Steel Propeller
9.9-15 HP	Black Diamond	
20-140 HP	Black Diamond, Nemesis	Silverado
150-225 HP	Black Diamond, Diamond 4, Nemesis	Silverado, Thunderbolt, Q3, Q4

Fiberglass Deckboat

16-24'

Model/Horsepower	Aluminum Propeller	Stainless Steel Propeller
30-140 HP	Black Diamond, Nemesis	Silverado
150-225 HP	Black Diamond, Diamond 4, Nemesis	Silverado, Thunderbolt, QST 5, Q3, Q4

Houseboat/Workboat

Model/Horsepower	Aluminum Propeller	Stainless Steel Propeller
30-150 HP	Black Diamond, Nemesis	Silverado
200-225 HP	Black Diamond, Diamond 4	Silverado, Thunderbolt, Q3, Q4

QUICKSILVER STERNDRIVE PROPELLER SELECTOR CHART

Quicksilver Propeller selector by famliy for Sterndrives

Fiberglass Cruiser

21-24'

Model/Horsepower	Aluminum Propeller	Stainless Steel Propeller
4.3L - 5.0L	Black Diamond, Diamond 4, Nemesis	Silverado, Q3, Q4, QST 5
5.7L - 8.2L	Black Diamond, Diamond 4, Nemesis	Silverado, Thunderbolt, Q3, Q4, QST 5

Fiberglass Sportboat

21-24'

Model/Horsepower	Aluminum Propeller	Stainless Steel Propeller
5.7L - 8.2L	Black Diamond, Diamond 4, Nemesis	Silverado, Thunderbolt, Q3, Q4, QST 5

Fiberglass Deckboat/Pontoon Boat

16-26'

Model/Horsepower	Aluminum Propeller	Stainless Steel Propeller
2.5L - 5.0L	Black Diamond, Diamond 4, Nemesis	Silverado, Q3, Q4, QST 5
5.7L - 8.2L	Black Diamond, Diamond 4, Nemesis	Silverado, Thunderbolt, Q3, Q4, QST 5

Houseboat/Workboat

Model/Horsepower	Aluminum Propeller	Stainless Steel Propeller
2.5L - 5.0L	Black Diamond, Diamond 4, Nemesis	Silverado, Q3, Q4,
5.7L - 8.2L	Black Diamond, Diamond 4, Nemesis	Silverado, Thunderbolt, Q3, Q4,

BLACK DIAMOND

General purpose 3-blade aluminum propeller
Inexpensive and easy to repair
Recommended for speeds less than 50 MPH and applications less than 250 HP
4-30 hp are rubber hub propellers
40-60 hp standard are equipped with the Reflex hub system
40-60 hp CT (large gearcase) and larger require a Flo Torq II hub system

BLACK DIAMOND OUTBOARD/STERNDRIVE WITH 4 3/4 IN GEARCASE (GROUP E)

BLACK DIAMOND



QA2000X
16 X 11 RH AL 3 BL

QA2004X
16 X 13 RH AL 3 BL

QA2006X
16 X 14 RH AL 3 BL

QA2008X
15 1/2 X 15 RH AL 3 BL

QA2010X
16 X 16 RH AL 3 BL

QA1912X
15 X 17 RH AL 3 BL

QA2014X
15 1/2 X 18 RH AL 3 BL

QA1916X
14 1/2 X 19 RH AL 3 BL

QA1918X
14 1/4 X 21 RH AL 3 BL

QA1920X
14 X 23 RH AL 3 BL

BLACK DIAMOND OUTBOARD WITH 4 1/4 IN GEARCASE (GROUP D)

BLACK DIAMOND



QA2028X
14 X 10 RH AL 3 BL

BLACK DIAMOND



QA2828X
14 X 10 RH AL 3 BL Extra Cup

BLACK DIAMOND



QA2030X
14 X 11 RH AL 3 BL

BLACK DIAMOND



QA2830X
14 X 11 RH AL 3 BL Extra Cup

QA2832X
14 X 13 RH AL 3 BL Extra Cup

BLACK DIAMOND FOR STANDARD 40-60 HP OUTBOARD

BLACK DIAMOND



QA2060X
12 1/2 X 8 RH AL 3 BL

QA2062X
12 1/4 X 9 RH AL 3 BL

QA2064X
11 1/4 X 10 RH AL 3 BL

QA2070X
10 7/8 X 11 RH AL 3 BL

QA2074X
10 5/8 X 12 RH AL 3 BL

QA2072X
10 3/4 X 12 RH AL 3 BL

QA2078X
10 3/8 X 13 RH AL 3 BL

QA2076X
10 1/2 X 13 RH AL 3 BL

QA2082X
10 1/4 X 14 RH AL 3 BL

QA2080X
10 3/8 X 14 RH AL 3 BL

QA2084X
10 1/8 X 15 RH AL 3 BL

BLACK DIAMOND FOR 85-140 HP EVENRUDE/ JOHNSON V-4

Black Diamond Propellers designed to fit 85-140 hp Evenrude/Johnson V-4

BLACK DIAMOND



QA3832X
14 X 13 RH AL 3 BL Extra Cup

BLACK DIAMOND



QA2208X
13 3/4 X 15 RH AL 3 BL

QA2206X
13.25 X 17 RH AL 3 BL

BLACK DIAMOND 4

4-blade aluminum propeller
Inexpensive and easy to repair
Improves acceleration and mid-range performance on many boats

DIAMOND 4



QA2182X
15 X 16 RH AL 4 BL

QA2183X
15 X 16 LH AL 4 BL

QA2184X
14 1/2 X 18 RH AL 4 BL

QA2185X
14 1/2 X 18 LH AL 4 BL

QA2186X
14 X 20 RH AL 4 BL

QA2187X
14 X 20 LH AL 4 BL

NEMESIS

Introducing the Nemesis - the ultimate performance aluminum propeller. Do you want to take your boats performance to the next level? The Nemesis provides 16-25% faster acceleration and superior holding all while maintaining top speed vs. a comparable 3 blade aluminum propeller.
Hub Application:
For 25-30 HP 4-Stroke outoboards (Flo-Torq I)
40-60 HP standard gearcase outoboards (Flo-Torq Reflex)
40 Bigfoot - 300 HP (Flo-Torq II)
The 10, 11 and 13 pitch propellers for the 40-60 BigFoot are specifically desined for excellent performance in pontoon applications. If engine RPM is appropriate with 3-blade prop, replace with the same pitch Nemesis propeller.
9.5" - 19" pitch RH only

NEMESIS 25-30 HP

25-30 HP 4-Stroke outoboards 2006 and newer Flo-Torq I Rubber Hub.

NEMESIS PROPELLER



48-8M8027516
9.3 X 9.5P RH Al 4 BL
48-8M8027517
9.3 X 11 RH AL 4 BL

NEMESIS 40-60 HP

25 HP BigFoot, 30 HP 4- Stroke (2005 and earlier) 40-60 HP 2-stroke and 4-Stroke outoboards.

Equipped with Flo-Torq Reflex Hub system to eliminate clutch rattle.

NEMESIS PROPELLER



48-8M8027511
10.6 X 12 RH AL 4 BL
48-8M8027512
10.3 X 13 RH AL 4 BL
48-8M8027513
10.1 X 14 RH AL 4 BL
48-8M8027514
10.1 X 15 RH AL 4 BL

NEMESIS 40 BIGFOOT - 125 HP

For 40-60 HP Bigfoot 4-strokes, 75-125 HP 2 and 4-Stroke outoboards.

10-13 Pitch propellers are designed for to provide superior holding and lift for pontoon boats.

Flo-Torq II hub system not included

NEMESIS PONTOON PROPELLER



48-8M8027497
13.8 X 10 RH AL 4 BL
48-8M8027498
13.8 X 11 RH AL 4 BL
48-8M8027500
13.8 X 13 RH AL 4 BL

NEMESIS PROPELLER



48-8M8027502
13.4 X 15 RH AL 4 BL
48-8M8027504
13.0 X 17 RH AL 4 BL
48-8M8027506
12.5 X 19 RH AL 4 BL

NEMESIS 90 CT - 300 HP

For 90 CT - 300 HP 2 and 4-Stroke outoboards and most 4.75 inch Gearcase Sterndrives.
Flo-Torq II hub system not included
The high performance blade design is not recommended for Alpha One drives with a 1.47 ratio

NEMESIS PROPELLER



48-8M0055531
14 X 12 AL RH 4BL

NEMESIS PROPELLER



48-8M0055533
14 X 12 AL RH 4BL

NEMESIS PROPELLER



48-8M0055534
14 X 17 RH AL 4 BL
48-8M0055535
14 X 19 RH AL 4 BL
48-8M0055536
14 X 21 RH AL 4 BL
48-8M0055537
14 X 23 RH AL 4 BL

SILVERADO

General-purpose 3-blade stainless steel propeller
Over five times more durable than an aluminum prop

SILVERADO



48-8M0055292
14 X 10 RH SS 3 BL
48-8M0055293
14 X 12 RH SS 3 BL

SILVERADO



QS5164X
11 X 12 RH SS 3 BL

SILVERADO



QS5180R
10 3/8 X 13 RH SS 3 BL

SILVERADO



QS5166X
10 1/2 X 13 RH SS 3 BL
QS5168X
10 3/8 X 14 RH SS 3 BL

SILVERADO



QS5114X
13 3/8 X 14 RH SS 3 BL

SILVERADO



QS5170X
10 1/4 X 15 RH SS 3 BL

SILVERADO



QS5050X
14 1/2 X 15 RH SS 3 BL

QS5116X
13 1/8 X 16 RH SS 3 BL

QS5052X
14 1/2 X 17 RH SS 3 BL

QS5118X
13 X 18 RH SS 3 BL

QS5054X
14 X 19 RH SS 3 BL

QS5056X
13 3/4 X 21 RH SS 3 BL

QS5058X
13 1/2 X 23 RH SS 3 BL

QS5059X
13 1/2 X 23 LH SS 3 BL

QUICKSILVER Q3

The Q3 is a revolutionary propeller that improves both acceleration and top speed on center consoles, high horsepower pontoons, and sterndrive powered runabouts. The design consists of high rake angles and thin blades resulting in the Q3 being the highest performing 3-blade propeller in the Quicksilver line-up.

Equipped with PVS - Performance Vent System

Flo-Torq II hub system not included

QUICKSILVER Q3 PROPELLER



48-8M0103516
16 x 11 RH SS 3 BL

48-8M0103517
15.6 x 13P RH SS 3 BL

48-8M0103518
15.3 x 14P RH SS 3 BL

48-8M0103519
15.0 x 15P RH SS 3 BL

48-8M0103520
14.7 x 16P RH SS 3 BL

48-8M0103521
14.5 x 17P RH SS 3 BL

48-8M0103522
14.2 x 18P RH SS 3 BL

48-8M0103523
14.0 x 19P RH SS 3 BL

48-8M0103524
13.8 x 20P RH SS 3 BL

48-8M0103525
13.6 x 21P RH SS 3 BL

QUICKSILVER Q4

The Q4 is an innovative propeller that provides outstanding holeshot, midrange performance and superior handling on high horse power walleye boats, center consoles and stern drive runabouts. The exceptional hull lift from the additional blade area results in the Q4 to match 3-blade propellers such as the Quicksilver Thunderbolt.
Equipped with PVS - Performance Vent System
Flo-Torq II hub system not included

QUICKSILVER Q4 PROPELLER



48-8M0103526
14.6 x 17P RH SS 4 BL
48-8M0103527
14.6 x 17P LH SS 4 BL
48-8M0103528
14.6 x 19P RH SS 4 BL
48-8M0103529
14.6 x 19P LH SS 4 BL
48-8M0103530
14.6 x 21P RH SS 4 BL
48-8M0103531
14.6 x 21P LH SS 4 BL
48-8M0103532
14.6 x 23P RH SS 4 BL
48-8M0103533
14.6 x 23P LH SS 4 BL

LIGHTSPEED

Note: The Lightspeed propeller has been discontinued. For 75-125 hp engines, Quicksilver recommends using the Silverado of the equivalent pitch. For 135+ hp engines and sterndives, Quicksilver recommends the Torrent or the new Q3 propeller of the equivalent pitch.

THUNDERBOLT

3-blade stainless performance propeller with more blade area for large boats with big V-6 outboards and V-8 sterndrives
Outstanding on Bravo One and TRS sterndrives
Good prop for sport/performance style boats as well as cruisers
Equipped with PVS - Performance Vent System

Flo-Torq II hub system not included

THUNDERBOLT



QS5004X
15 1/2 X 17 RH SS 3 BL
QS5005X
15 1/2 X 17 LH SS 3 BL
QS5006X
15 1/4 X 19 RH SS 3 BL
QS5007X
15 1/4 X 19 LH SS 3 BL
QS5008X
14 3/4 X 21 RH SS 3 BL
QS5009X
14 3/4 X 21 LH SS 3 BL
QS5011X
14 5/8 X 23 LH SS 3 BL

TYPHOON

Note: The Typhoon propeller has been discontinued. For 135+ hp engines and sterndives, Quicksilver recommends the new Quicksilver Q3 or Quicksilver Q4 propeller of the equivalent pitch.

QST 5

5-blade design is excellent for tow-sports. The design also provides superior handling and control, making this propeller an excellent choice for freshwater fishermen who need control in rough water. This propeller also makes an excellent choice for anglers who want to maintain low speeds while back trolling.
Equipped with PVS - Performance Vent System
Flo-Torq II hub system not included

QST 5 PROPELLER



QS1154X
13 1/2 x 17 RH SS 5 BL

QS5758X
13 1/3 x 19 RH SS 5 BL

QS5760X
13 1/3 x 21 RH SS 5 BL

TORRENT

The ultimate propeller for high power, high speed bass, walleye and bay boats.

Higher rake and more cup provides better handling and bow lift on big V-6 powered outboard powered boats.
Equipped with PVS - Performance Vent System
Flo-Torq II hub system not included

TORRENT

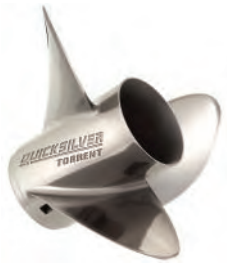

QS5862X
14.625 X 21 RH SS 3 BL

QS5864X
14.625 X 23 RH SS 3 BL

QS5866X
14.625 X 25 RH SS 3 BL

BLACK DIAMOND BII - BRAVO TWO

General purpose 3-blade aluminum propeller
Right and left-hand rotation
11-25" pitch

BLACK DIAMOND BRAVO TWO PROPELLER



48-8M0078084
20 X 11 RH Alum 3 BL

48-8M0078085
20 X 11 LH Alum 3 BL

48-8M0078086
19.5 X 13 RH Alum 3 BL

48-8M0078087
19.5 X 13 LH Alum 3 BL

48-8M0078088
19.25 X 15 RH Alum 3 BL

48-8M0078089
19.25 X 15 LH Alum 3 BL

48-8M0078090
18.75 X 17 RH Alum 3 BL

48-8M0078091
18.75 X 17 LH Alum 3 BL

BLACK DIAMOND BRAVO TWO



QA1940R
18 1/4 x 19 RH AL 3 BL

QA1941R
18 1/4 x 19 LH AL 3 BL

QA1946R
17 3/4 x 21 RH AL 3 BL

QA1947R
17 3/4 x 21 LH AL 3 BL

QA1952R
17 1/2 x 23 RH AL 3 BL

QA1953R
17 1/2 x 23 LH AL 3 BL

BLACK DIAMOND BRAVO TWO PROPELLER



48-8M0078092
17.25 X 25 RH Alum 3 BL

48-8M0078093
17.25 X 25 LH Alum 3 BL

THUNDERBOLT BIII - BRAVO THREE

Twin counter rotating stainless steel propellers
Large diameter forward propeller
Small diameter aft propeller
Unbelievable handling and boat control
Tough matte finish
22-28" pitch

THUNDERBOLT BIII



QS3320S
14 3/8 x 20 RH SS 3 BL

QS3321S
16 x 20 LH SS 3 BL

QS3322S
14 1/4 x 22 RH SS 3 BL

QS3323S
15 3/4 x 22 LH SS 3 BL

QS3324S
14 1/4 x 24 RH SS 3 BL

QS3325S
15 1/2 x 24 LH SS 3 BL

QS3326S
14 x 26 RH SS 3 BL

QS3327S
15 1/4 x 26 LH SS 3 BL

QS3328S
13 3/4 x 28 RH SS 3 BL

QS3329S
15 x 28 LH SS 3 BL

THUNDERBOLT - FOR VOLVO PENTA DPS DRIVES

Twin counter rotating stainless steel propellers for Volvo Penta DPS Drives. Large diameter 4 blade front propeller provides superior holding and acceleration. Suitable replacment for Volvo Penta Type F or Type X Duo Prop propellers.
Tough matte finish
19-28 pitch
Replace Volvo Type F propeller with corresponding Thunderbolt propeller according to the chart below:

Volvo Type F Propeller Set						
F3	F4	F5	F6	F7	F8	
19P	20P	21P	22.5P	24P	26P	28P
Quicksilver Thunderbolt Equivalent Propeller Set						

QUICKSILVER THUNDERBOLT



48-8M8026210
16 X 19 LH SS 4 BL - Front
Matte Finish

48-8M8026220
14.4 X 19 RH SS 3 BL - Rear
Matte Finish

48-8M8026230
16 X 20 LH SS 4 BL - Front
Matte Finish

48-8M8026240
14.4 X 20 RH SS 3 BL - Rear
Matte Finish

48-8M8026250
15.9 X 21 LH SS 4 BL - Front
Matte Finish

48-8M8026260
14.3 X 21 RH SS 3 BL - Rear
Matte Finish

48-8M8026270
15.75 X 22.5 LH SS 4 BL - Front
Matte Finish

48-8M8026280
14.25 X 22.5 RH SS 3 BL - Rear
Matte Finish

48-8M8026290
15.5 X 24 LH SS 4 BL - Front
Matte Finish

48-8M8026300
14 X 24 RH SS 3 BL - Rear
Matte Finish

48-8M8026310
15.25 X 26 LH SS 4 BL - Front
Matte Finish

48-8M8026320
13.75 X 26 RH SS 3 BL - Rear
Matte Finish

48-8M8026330
15 X 28 LH SS 4 BL - Front
Matte Finish

48-8M8026340
13.5 X 28 RH SS 3 BL - Rear
Matte Finish

THUNDERBOLT - FOR VOLVO PENTA IPS DRIVES

The first performance aftermarket propeller for Volvo Penta IPS drives. Manufactured using 15-5 stainless steel alloy - a material twice as strong as NiBrAl - providing superior durability and reliability. Suitable replacment for Volvo Penta Type T Duo Prop propellers.
Replace Type T propellers with Thunderbolt propellers of equivalent size. Available in sizes 7, 5, 4 and 3

QUICKSILVER THUNDERBOLT IPS



48-8M8026390
Size 3 SS 3 BL - Front
Matte Finish

48-8M8026400
Size 3 SS 4 BL - Rear
Matte Finish

48-8M8026410
Size 4 SS 3 BL - Front
Matte Finish

48-8M8026420
Size 4 SS 4 BL - Rear
Matte Finish

48-8M8026430
Size 5 SS 3 BL - Front
Matte Finish

48-8M8026440
Size 5 SS 4 BL - Rear
Matte Finish

48-8M8026470
Size 7 SS 3 BL - Front
Matte Finish

48-8M8026480
Size 7 SS 4 BL - Rear
Matte Finish

OEM - QUICKSILVER PROPELLER CROSS REFERENCE

EVINRUDE/JOHNSON/OPMC PROP CROSS REFERENCE

Evinrude/Johnson/OMC Prop Cross Reference

OEM	QUICKSILVER
174813	QS5059X
174816	QS5058X
174817	QA3170R
174926	QS5050X
174950	QA3168R
175190	QA3114R
175191	QA3118R
176214	N.L.A.
176215	N.L.A.
176216	N.L.A.
176421	QA3084R
176422	QA3088R
176423	
176571	QS5136X
176572	QS5138X
176573	QS5140X
176574	QS5142X
176615	QS5052X
176616	QS5053X
176617	QS5054X
176618	QS5055X
176619	QS5056X
176620	QS5057X
176623	QS5138X
176624	QS5140X
176625	QS5142X
176626	QS5052X
176627	QS5054X
176628	QS5056X
176629	QS5053X
176630	QS5055X
176902	QS5057X
176969	QS5052X
176970	QS5054X
176973	QS5053X
176974	QS5055X
177034	QS5136X
177035	QS5138X
177036	QS5140X
177042	QS5136X
380637	N.L.A.
382761	N.L.A.
383629	QA3150R
384460	N.L.A.
386786	QA3084R
386841	QA3088R
386907	QA3080R
386908	
386909	QA3082R
387334	QA3178R
388088	QA3152R
388883	
389019	QS5058X
389510	QS5140X
389512	QS5142X
389788	N.L.A.
389923	QS5056X
389924	QS5054X
389944	N.L.A.
389948	QS5138X
389949	QS5136X
390237	QA3190R
390380	QA3122R
390821	QS5055X
390822	QS5057X
390823	QS5059X
390896	N.L.A.
391198	N.L.A.
391199	N.L.A.
391200	QA1912X
391201	QA1916X
391202	QA1918X
391203	QA1920X
391290	QS5052X
391535	QA2008X
391536	QA2004X
391668	N.L.A.
394752	QS5070X
394753	QS5072X
394754	QS5074X
394755	QS5076X
394759	QS5140X
394760	QS5142X
394761	N.L.A.
398502	
398503	QS5075X
398504	N.L.A.
431390	QS5053X
3850298	QA2004X
3850299	QA2008X
3850300	QA1912X
3850301	QA1916X
3850302	QA1918X
3850303	QA1920X
3850305	QS5050X
3850307	QS5052X
3850308	QS5054X
3850309	QS5056X
3850310	QS5058X

OEM - QUICKSILVER PROPELLER CROSS REFERENCE

OEM	QUICKSILVER
3850311	QS5052X
3850312	QS5054X
3850313	QS5056X
3850314	QS5058X
3850316	QS5053X
3850317	QS5055X
3850318	QS5057X
3850319	QS5059X
3850320	QS5053X
3850321	QS5057X
3850322	QS5057X
3850323	QS5059X
3855142	QS5072X
3855144	QS5074X
3855146	QS5076X
3855152	
3855154	QS5075X
3855156	N.L.A.
3858026	QS5052X
3858027	QS5054X
3858028	QS5056X
3858029	QS5053X
3858030	QS5055X
3858031	QS5057X
5031619	QA2078X
5031620	N.L.A.
5031623	N.L.A.
5031627	QA2234R

FORCE PROPELLER CROSS REFERENCE

Force Prop Cross Reference

OEM	QUICKSILVER
16986A45	QS5116X
48-16986A46	QS5116X
48-16988A45	QS5118X
48-16988A46	QS5118X
48-16990A45	QS5120X
48-16990A46	QS5120X
48-16992A45	QS5122X
48-16992A46	QS5122X
48-16994A45	QS5124X
48-16994A46	QS5124X
48-16996A45	QS5126X
48-16996A46	QS5126X
48-17314A45	QS5114X
48-17314A46	QS5114X
48-19638A40	N.L.A.
48-19640A40	QA2106R
48-19642A40	N.L.A.
48-19644A5	QS5180R
48-42738A11	QA2060X
48-42740A11	N.L.A.
48-73132A40	QA2064X
48-73134A40	QA2074X
48-73136A40	QA2078X
48-73138A40	QA2082X
48-73140A40	QA2084X
48-73144A40	N.L.A.
48-77338A40	QA2030X
48-77338A45	QA2030X
48-77340A40	QA2032X
48-77340A45	QA2032X
48-77342A40	QA2034X
48-77342A45	QA2034X
48-77344A40	QA2036X
48-77344A45	QA2036X
48-77346A40	QA2038X
48-77346A45	QA2038X
48-77348A40	QA2040X
48-77348A45	QA2040X
48-77350A40	QA2042X
48-77350A45	QA2042X
48-816702A40	QA2072X
48-816704A40	QA2076X
48-816706A40	QA2080X
48-827312A11	N.L.A.
48-828148A12	
48-828150A12	N.L.A.
48-828152A12	QA2124R
48-828154A12	QA2126R
48-828156A12	QA2128R
48-828158A12	QA2130R
48-854340A45	QA2026X
48-854342A45	QA2028X
48-855856A5	QS5164X
48-855858A5	QS5166X
48-855860A5	QS5168X
48-855862A5	QS5170X
48-85632A40	QA2070X
48-87818A11	QA2062X

HONDA PROPELLER CROSS REFERENCE

Honda Prop Cross Reference

OEM	QUICKSILVER
08M60-ZW7-A00	QS5116X
08M60-ZW7-A10	QS5118X
58110-ZV5-E00	QS5170X
58110-ZV5-E10	QS5168X
58110-ZV5-E20	QS5166X
58110-ZV5-E30	QS5164X
58120-ZW1-V01	QS5118X
58130-ZV4-008AH	N.L.A.
58130-ZV4-009AH	QA3906R
58130-ZV4-010AH	QA3914R
58130-ZV4-030ZA	QA3914R

OEM	QUICKSILVER
58130-ZV4-701ZA	QA3906R
58130-ZV5-000ZA	QA2074X
58130-ZV5-009AH	QA2062X
58130-ZV5-011AH	N.L.A.
58130-ZV5-012AH	QA2072X
58130-ZV5-012AH	QA2078X
58130-ZV5-013AH	QA2076X
58130-ZV5-013AH	QA2082X
58130-ZV5-014AH	QA2080X
58130-ZV5-015AH	QA2084X
58130-ZV5-015AH	N.L.A.
58130-ZV5-850ZA	QA2070X
58130-ZV5-860ZA	N.L.A.
58130-ZV5-870ZA	QA2084X
58130-ZW1-V11	QS5122X
58130-ZW1-V31	QS5120X
58130-ZW1-W01ZA	QA2030X
58130-ZW1-W11ZA	QA2032X
58130-ZW1-W21ZA	QA2034X
58130-ZW1-W31ZA	QA2036X
58130-ZW1-W41ZA	QA2040X
58130-ZW1-W51ZA	QA2042X
58130-ZW1-W61ZA	QA2038X
58130-ZW1-W91	QS5116X
58133-ZV7-012AH	QS5164X
58133-ZV7-013AH	QS5166X
58133-ZW1-A13AH	QS5114X
58133-ZW1-A15AH	QS5116X
58133-ZW1-A17AH	QS5118X

MERCURY/MARINER/MERCRUISER PROP CROSS REFERENCE

Mercury/Mariner/MerCruiser Prop Cross Reference

OEM	QUICKSILVER
8M0084494	48-8M0055534
8M0084495	48-8M0055535
8M0084496	48-8M0055536
8M0084497	48-8M0055537
8M0070079	48-8M0103516
8M0070074	48-8M0103517
48-898988A46	48-8M0103518
48-898990A46	48-8M0103519
48-898992A46	48-8M0103520
48-898994A46	48-8M0103521
48-898996A46	48-8M0103522
48-898998A46	48-8M0103523
48-899900A46	48-8M0103524
48-899902A46	48-8M0103525
48-857024A46	48-8M0103526
48-857025A46	48-8M0103527
48-857026A46	48-8M0103528
48-857027A46	48-8M0103529
48-857028A46	48-8M0103530

OEM	QUICKSILVER
48-857029A46	48-8M0103531
48-857030A46	48-8M0103532
48-857031A46	48-8M0103533
48-11324A40	QA2014X
48-11324A45	QA2014X
48-13700A41	QS5006X
48-13700A45	QS5006X
48-13700A46	QS5006X
48-13701A41	QS5007X
48-13701A45	QS5007X
48-13701A46	QS5007X
48-13702A41	QS5008X
48-13702A45	QS5008X
48-13702A46	QS5008X
48-13703A41	QS5009X
48-13703A45	QS5009X
48-13703A46	QS5009X
48-13704A41	N.L.A.
48-13704A45	N.L.A.
48-13704A46	N.L.A.
48-13705A41	QS5011X
48-13705A45	QS5011X
48-13705A46	QS5011X
48-16312A4	QS5050X
48-16312A45	QS5050X
48-16312A46	QS5050X
48-16314A4	QS5052X
48-16314A45	QS5052X
48-16314A46	QS5052X
48-16315A4	QS5053X
48-16315A45	QS5053X
48-16315A46	QS5053X
48-16316A4	QS5054X
48-16316A45	QS5054X
48-16316A46	QS5054X
48-16317A4	QS5055X
48-16317A45	QS5055X
4/-16317A46	QS5055X
48-16318A4	QS5056X
48-16318A45	QS5056X
48-16318A46	QS5056X
48-16319A4	QS5057X
48-16319A45	QS5057X
48-16319A46	QS5057X
48-16320A4	QS5058X
48-16320A45	QS5058X
48-16320A46	QS5058X
48-16321A4	QS5059X
48-16321A45	QS5059X
48-16321A46	QS5059X
48-16322A4	QS5076X
48-16322A45	QS5076X
48-16436A40	
48-16436A45	

OEM - QUICKSILVER PROPELLER CROSS REFERENCE

OEM	QUICKSILVER
48-16438A40	QA2006X
48-16438A45	QA2006X
48-16440A40	QA2010X
48-16440A45	QA2010X
48-16543A41	QS5071X
48-16543A45	QS5071X
48-16543A46	QS5071X
48-16544A41	QS5070X
48-16544A45	QS5070X
48-16544A46	QS5070X
48-16545A41	
48-16545A45	
48-16545A46	
48-16546A41	QS5072X
48-16546A45	QS5072X
48-16546A46	QS5072X
48-16547A41	QS5075X
48-16547A45	QS5075X
48-16547A46	QS5075X
48-16548A41	QS5074X
48-16548A45	QS5074X
48-16548A46	QS5074X
48-16549A41	N.L.A.
48-16549A45	N.L.A.
48-16549A46	N.L.A.
48-16550A46	QS5076X
48-16986A45	QS5116X
48-16986A46	QS5116X
48-16988A45	QS5118X
48-16988A46	QS5118X
48-16990A45	QS5120X
48-16990A46	QS5120X
48-16992A45	QS5122X
48-16992A46	QS5122X
48-16994A45	QS5124X
48-16994A46	QS5124X
48-16996A45	QS5126X
48-16996A46	QS5126X
48-17314A45	QS5114X
48-17314A46	QS5114X
48-18278A41	QS5004X
48-18278A45	QS5004X
48-18278A46	QS5004X
48-19638A40	N.L.A.
48-19640A40	QA2106R
48-19642A40	N.L.A.
48-19644A5	QS5180R
48-32390A3	QA2032X
48-32390A4	QA2034X
48-35936A3	QA2030X
48-36020A4	QA2004X
48-42738A11	QA2060X
48-42740A11	N.L.A.
48-58826A3	QA2030X

OEM	QUICKSILVER
48-61812A1	QA2064X
48-61814A1	QA2064X
48-61816A1	QA2078X
48-61818A1	QA2078X
48-61820A1	QA2082X
48-61822A1	QA2084X
48-61824A1	QA2084X
48-65022A1	QA2034X
48-65022A4	QA2036X
48-65024A1	QA2036X
48-65024A4	QA2038X
48-67280A1	QA2038X
48-67280A4	QA2040X
48-73132A40	QA2064X
48-73134A40	QA2074X
48-73136A40	QA2078X
48-73138A40	QA2082X
48-73140A40	QA2084X
48-73144A40	N.L.A.
48-77338A40	QA2030X
48-77338A45	QA2030X
48-77340A40	QA2032X
48-77340A45	QA2032X
48-77342A40	QA2034X
48-77342A45	QA2034X
48-77344A40	QA2036X
48-77344A45	QA2036X
48-77346A40	QA2038X
48-77346A45	QA2038X
48-77348A40	QA2040X
48-77348A45	QA2040X
48-77350A40	QA2042X
48-77350A45	QA2042X
48-78112A4	QA2000X
48-78112A40	QA2000X
48-78112A45	QA2000X
48-78114A4	QA2004X
48-78114A40	QA2004X
48-78114A45	QA2004X
48-78116A4	QA2008X
48-78116A40	QA2008X
48-78116A45	QA2008X
48-78118A4	QA1912X
48-78118A40	QA1912X
48-78118A45	QA1912X
48-78120A4	QA1916X
48-78120A40	QA1916X
48-48120A45	QA1916X
48-78122A4	QA1918X
48-78122A45	QA1918X
48-78124A4	QA1920X
48-78124A40	QA1920X
48-78124A45	QA1920X
48-78126A4	N.L.A.

OEM	QUICKSILVER
48-78126A40	N.L.A.
48-78126A45	N.L.A.
48-79570A4	QA2006X
48-79572A4	QA2010X
48-79574A4	QA2014X
48-79576A4	QA1918X
48-79578A4	QA1920X
48-81649M	QA3808R
48-816702A40	QA2072X
48-816704A40	QA2076X
48-816706A40	QA2080X
48-827312A11	N.L.A.
48-82764	QA3178R
48-828148A12	
48-828150A12	N.L.A.
48-828152A12	QA2124R
48-828154A12	QA2126R
48-828156A12	QA2128R
48-828158A12	QA2130R
48-82826M	QA3812R
48-832828A45	QA1912X
48-832830A45	QA1916X
48-832832A45	QA1918X
48-832834A45	QA1920X
48-834850A45	QA2182X
48-834851A45	QA2183X
48-834852A45	QA2184X
48-834853A45	QA2185X
48-834854A45	QA2186X
48-834855A45	QA2187X
48-84976M	QA3810R
48-854340A45	QA2026X
48-854342A45	QA2028X
48-855856A5	QS5164X
48-855858A5	QS5166X
48-855860A5	QS5168X
48-855862A5	QS5170X
48-85632A40	QA2070X
48-87818A11	QA2062X
48-90159A41	QS5005X
48-90159A45	QS5005X
48-90159A46	QS5005X
48-96623M	QA3152R
48-96625M	QA3150R

SUZUKI PROPELLER CROSS REFERENCE

Suzuki Prop Cross Reference

OEM	QUICKSILVER
58100-93733-019	QA2270R
58100-93743-019	QA2274R
58100-93773-09	QA2270R
58100-94313-019	QA2078X
58100-95222-019	N.L.A.
58100-95353-019	N.L.A.
58100-95363-019	QA2234R
58100-95382-019	N.L.A.
58100-95500-019	QA2208X
58100-95511-019	QA2206X
58100-95521-019	N.L.A.
58100-95530-019	N.L.A.
58100-96370-019	N.L.A.
58100-96420-019	QA2248R
58100-96430-019	N.L.A.
58100-96440-019	N.L.A.
58100-96480-019	N.L.A.
58100-96490-019	N.L.A.
99105-00100-16P	QS5136X
99105-00100-18P	QS5138X
99105-00100-22P	QS5142X
99105-00101-20P	QS5140X
99105-00101-24P	N.L.A.
99105-00200-16P	QS5050X
99105-00200-18P	QS5052X
99105-00200-20P	QS5070X
99105-00200-22P	QS5072X
99105-00200-24P	QS5074X
99105-00200-26P	QS5076X
99105-00203-23P	N.L.A.
99105-0020L-18P	QS5053X
99105-0020L-20P	QS5071X
99105-0020L-22P	
99105-0020L-24P	QS5075X
99105-0020L-26P	N.L.A.
99105-00301-24P	N.L.A.

TOHATSU/NISSAN PROPELLER CROSS REFERENCE

Tohatsu/Nissan Prop Cross Reference

OEM	QUICKSILVER
35364-1040M	QA3080R
35364-1050M	QA3082R
35364-1060M	QA3084R
35364-1090M	QA3088R
3B764-5230M	QA2026X
3B764-5270M	QA2030X
3B764-5320M	QA2032X
3B764-5360M	QA2034X
3B764-5410M	QA2036X
3B764-5451M	QA2038X
3B764-5490M	QA2040X

VOLVO PROPELLER CROSS REFERENCE

Volvo Prop Cross Reference

OEM	QUICKSILVER
3858026	QS5052X
3858029	QS5053X
3858030	QS5055X
3858031	QS5057X
3850298-5	QA2004X
3850299-3	QA2008X
3850300-9	QA1912X
3850301-7	QA1916X
3850302-5	QA1918X
3850303-5	QA1920X
3850305-8	QS5050X
3850307-7	QS5052X
3850308-2	QS5054X
3850309-0	QS5056X
3850310-8	QS5058X
3850311-6	QS5052X
3850312-4	QS5054X
3850313-2	QS5056X
3850314-0	QS5058X
3850316-5	QS5053X
3850317-3	QS5055X
3850318-1	QS5057X
3850319-9	QS5059X
3850320-7	QS5053X
3850321-5	QS5055X
3850322-3	QS5057X
3850323-1	QS5059X
3855142-0	QS5072X
3855144-6	QS5074X
3855146-1	QS5076X
3855152-9	
3855154-5	QS5075X
3855156-0	N.L.A.
3858027-0	QS5054X
3858028-8	QS5056X
814612-8	N.L.A.
814616-9	N.L.A.
814627-6	N.L.A.
814628-4	N.L.A.
814629-2	N.L.A.
814633-4	N.L.A.
814634-2	N.L.A.
851139-6	QA3536R
854979-2	QA3537R
854982-6	QA3543R
854983-4	QA3545R
854993-3	N.L.A.
854997-4	QA3542R
854998-2	QA3544R

YAMAHA PROPELLER CROSS REFERENCE

Yamaha Prop Cross Reference

OEM	QUICKSILVER
651-45947-00-36	QA3150R
653-45941-01-36	QA3152R
663-45930-00-98	QS5168X
663-45947-02-EL	QA2070X
663-45949-01-EL	N.L.A.
663-45956-01-EL	QA2062X
663-45958-01-EL	QA2082X
663-45970-60-98	QS5164X
663-45974-30-98	QS5168X
663-45974-60-98	QS5166X
663-45976-00-98	QS5170X
663-45976-30-98	QS5170X
664-45945-00-EL	QA3808R
664-45947-01-EL	QA3810R
664-45949-02-EL	QA3814R
664-45954-00-EL	QA3812R
683-45943-00-EL	QA3914R
683-45945-00-EL	QA3906R
683-45947-00-EL	N.L.A.
688-45930-02-98	QS5118X
688-45932-60-98	QS5114X
688-45970-03-98	QS5120X
688-45972-02-98	QS5122X
688-45974-02-98	QS5124X
688-45976-01-98	QS5126X
688-45978-60-98	QS5116X
6E5-45941-00-EL	QA2038X
6E5-45943-00-EL	QA2040X
6E5-45945-01-EL	QA2036X
6E5-45947-00-EL	QA2034X
6E5-45949-00-EL	QA2032X
6E5-45952-00-EL	QA2042X
6E5-45954-00-EL	QA2030X
6G5-45941-00-98	QA2008X
6G5-45943-01-98	QA1918X
6G5-45945-01-98	QA1916X
6G5-45947-01-98	QA1912X
6G5-45949-00-98	QA1920X
6G5-45952-00-98	QA2010X
6G5-45970-02-98	QS5050X
6G5-45972-02-98	QS5056X
6G5-45974-03-98	QS5054X
6G5-45976-01-98	QS5058X
6G5-45978-03-98	QS5052X
6H5-45943-00-EL	QA2078X
6H5-45945-00-EL	QA2070X
6H5-45952-00-EL	QA2064X
6H5-45958-00-EL	QA2074X
6K1-45972-01-98	QS5057X
6K1-45974-02-98	QS5055X
6K1-45976-00-98	QS5059X

OEM	QUICKSILVER
6K1-45978-02-98	QS5053X
6R1-45970-A0-00	QS5007X
6R1-45972-A0-00	QS5009X
6R1-45974-A0-00	QS5011X
6R1-45978-A0-00	QS5005X
6R4-45970-A0-00	QS5006X
6R4-45972-A0-00	QS5008X
6R4-45974-A0-00	N.L.A.
6R4-45978-A0-00	QS5004X
MAR-GYT3B-L6-18	QS5071X
MAR-GYT3B-L6-20	
MAR-GYT3B-L6-22	QS5075X
MAR-GYT3B-V6-18	QS5070X
MAR-GYT3B-V6-20	QS5072X
MAR-GYT3B-V6-22	QS5074X
MAR-GYT3B-V6-24	QS5076X

HISTORICAL PROPELLER CHARTS

MERCURY ELECTRIC MOTORS

Thruster Gear Drive #577

Nut 79719 - NLA Pin 17-70733 Retainer 79719 - NLA

PART NO.	DIAMETER	PITCH	MATERIAL	BLADES	ROTATION
18024A 4	10-1/2	6	PL BL	2	RH
18430A 4	10-1/2	6	PL CL	2	RH
72426	10-1/2	6	PL	2	RH
77970	10-1/2	6	PL	2	RH
85644	10-1/2	6	PL	2	RH
85646	10-1/2	6	PL	2	RH
87842A 2	10-1/2	6	PL	2	RH
87844A 2	10-1/2	6	PL	2	RH
N.L.A.	10	6	PL	2	RH

Thruster Direct Drive

Nut 79719 - NLA Washer 26-72462 Pin 17-70733

PART NO.	DIAMETER	PITCH	MATERIAL	BLADES	ROTATION
17530A__	9	3.2	PL BL	2	RH
18530A__	9-1/4	3.2	PL CL	2	RH
N.L.A.	9-1/4	3-1/4	PL BL	2	RH
48- 18428A 5	9-1/4	3-1/4	PL CL	2	RH
18512A__	9-1/4	3-1/4	PL CL	2	RH

Thruster R33, RX33, T33, R45, FL45, RX45, T45

Nut 818911-2 Washer 23-35935 Pin 17-70733

PART NO.	DIAMETER	PITCH	MATERIAL	BLADES	ROTATION
813728A 3	11	5	PL BL	2	RH
48-813730A 3	11	5	PL CL	2	RH

Thruster (MotorGuide Built)

PART NO.	DIAMETER	PITCH	MATERIAL	BLADES	ROTATION
824236T	9-1/2	2-5/8	PL CL	2	RH
48-MAF12406T	10	3-1/2	PL CL	2	RH

MERCURY OUTBOARD

Merc 2.5/3.3 A856377 and Up

Shear Pin 17-815111 (ALProp), 17-815111--1 (PL Prop) Cotter Pin 18-95295

PART NO.	DIAMETER	PITCH	MATERIAL	BLADES	ROTATION
48-815083A01	7-3/8	6	PL	3	RH
48-815083A02	7-3/8	7	PL	3	RH
48-815084A01	7-3/8	7	AL	3	RH
48-815084A02	7-3/8	7	AL w/rubber hub	3	RH

Merc 3.5 & 3.6

Thrust Hub (Fwd) 70588 Thrust Hub (Rear) 93356 - NLA Nut 11-826709 11

PART NO.	DIAMETER	PITCH	MATERIAL	BLADES	ROTATION	STATUS
93357A__	8	7	PL	3		N.L.A.

MERC 39 & 60 (1967 and OLDER - 6 SPLINE HUB)

N.L.A. = 48-34398A 1
N.L.A. = 48-34398A 1Collar 23-33582 -N.L.A. Washer 12-30524 -N.L.A. Washer 12-20084 Nut 11-826709 11

PART NO.	DIAMETER	PITCH	MATERIAL	BLADES	ROTATION	STATUS
30382A 1	8	8	AL	2	RH	N.L.A.
31105A 1	7-7/8	8	AL	2	RH	N.L.A.
31214A 1	8-1/4	6	AL	2	RH	N.L.A.
45890A 1	8-7/8	5	AL	3	RH	N.L.A.
37320A 1	9	4	AL	2	RH	N.L.A.

Merc 39/60(1968 and UP-8 SPLINE HUB)-Merc 40(1CYL)

NLA = 48-47920A1, 48-47938A1
Thrust Hub 86665A1 Spacer 11-64075A1 Washer 12-27025 Nut 11-34933

PART NO.	DIAMETER	PITCH	MATERIAL	BLADES	ROTATION	STATUS
47940A 1	8-1/4	6	AL	2		N.L.A.
47944A 1	8-7/8	5	AL	3		N.L.A.

MERC 40 (2 CYL.)

S/N 5805430 and Below Thrust Hub (Fwd) 70588 - NLA Thrust Hub (Rear) 70589 Nut 11-826709 11
S/N 5805431 and Up Thrust Hub (Fwd) 70588 - NLA Thrust Hub (Rear) 93356 Nut 11-826709 11

PART NO.	DIAMETER	PITCH	MATERIAL	BLADES	ROTATION	STATUS
70453A 1	8	7	PL	3	LH	N.L.A.
86903A 1	8 (7.9)	6-3/8 (6.3)	PL	3	LH	N.L.A.

MERC 45 & 4.5

NLA = 48-65010A1, 48-65012A1
Collar 86665A1 Spacer 23-65439 Nut 11-89013 - NLA

PART NO.	DIAMETER	PITCH	MATERIAL	BLADES	ROTATION	STATUS
77716A 1	8-1/4	7	AL	2	RH	N.L.A.
77716A10	8-1/4	7	AL	2	RH	N.L.A.
63494A 1	8-1/4	6	AL	2	RH	N.L.A.
63494A10	8-1/4	6	AL	2	RH	N.L.A.
94118A 1	8-1/2	5	AL	3	RH	N.L.A.
94118A10	8-1/2	5	AL	3	RH	N.L.A.

MERC 4/5 A809601 and UP

Thrust Hub 16145Q01 Washer 12-16146 Nut 11-16147

PART NO.	DIAMETER	PITCH	MATERIAL	BLADES	ROTATION
16143	8-3/8	8	AL	3	RH
16142	8-3/8	7	AL	3	RH
48- 16144A01	8-3/8	6	AL	3	RH
16836A 1	8-3/8	6	AL - HIGH REVERSE	3	RH
48-812949A02	7-7/8	7	AL	3	RH

PART NO.	DIAMETER	PITCH	MATERIAL	BLADES	ROTATION
48-812950A02	7-7/8	8	AL	3	RH
48-812951A02	7-7/8	6	HIGH REVERSE	3	RH

MARK 6 & 6A

PART NO.	DIAMETER	PITCH	MATERIAL	BLADES	ROTATION	STATUS
23919A 1						N.L.A.
25774						N.L.A.

Mercury 75 (7.5HP) and 110 (9.8HP)

Mercury 75 (7.5HP) and 110(9.8) 1968-1984
8 Spline
1968 thru 1978 - Thrust Hub 86665A1 Spacer 11-64075A1 Nut 11-46335 Washer 12-27025
1972 thru 1978 - Nut 11-64075A1

Length	Current MPH	Propeller Size	Material	Blades	Style	Quicksilver P/N	OEM P/N
To 15'	Up to 20	9 X 9 RH	AL	2	Black Diamond		

MERC 110 (1967 and OLDER - 6 SPLINE HUB)

NLA = 48-34400A1, 37318A1
Collar 12-31980A2 Washer 12-30524 - NLA Washer 12-20084 Nut 11-826709__11

PART NO.	DIAMETER	PITCH	MATERIAL	BLADES	ROTATION	STATUS
31504A 1	9	10	AL	2	RH	N.L.A.
32364A 1	9	9	AL	2	RH	N.L.A.

MARK 10 & MERC 100

PART NO.	DIAMETER	PITCH	MATERIAL	BLADES	ROTATION	STATUS
26608A 1						N.L.A.

MERC 6/8/9.9/9.9 4-STROKE/15 A197112 and UP

Forward Thrust Hub - Design I Propeller Shaft (Full length spines on propeller shaft) 821932 Thrust Hub for New Propellers, 42037 Thrust Hub for Old Propellers; Design II Propeller Shaft (Half length splines on propeller shaft) 821932--1 Thrust Hub for N

PART NO.	DIAMETER	PITCH	MATERIAL	BLADES	ROTATION
42522A__	9	9	AL	3	RH
42520A__	9-1/4	7	AL	3	RH
42524A__	9-3/4	6-1/2	AL - HIGH REVERSE	3	RH
42518A__	9-3/4	5-1/2	AL WORKBOAT	3	RH
17874A12	9	10-1/2	AL	3	RH

PART NO.	DIAMETER	PITCH	MATERIAL	BLADES	ROTATION
48-828158A12	9	10-1/2	AL	3	RH
48-828156A12	9	9	AL	3	RH
48-828154A12	9	8	AL	3	RH
48-828152A12	9-1/4	7	AL	3	RH
48-828150A12	9-3/4	6-1/2	AL	3	RH
48-828150A12	9-3/4	5-1/2	AL	3	RH

MARK 15-20-25-30

PART NO.	DIAMETER	PITCH	MATERIAL	BLADES	ROTATION	STATUS
20325A 1						N.L.A.
23647A 1						N.L.A.
25518A 1						N.L.A.
25551A 1						N.L.A.
25662A 1						N.L.A.
25419A 2						N.L.A.

OLD MARK 15A & MERC 150 (15Hp)

PART NO.	DIAMETER	PITCH	MATERIAL	BLADES	ROTATION	STATUS OR SUPERSESSION
27787A 1						N.L.A.
28880A 1						N.L.A.

MERC 18 & 25 (Standard Propellers)

Thrust Hub 858498 Nut 11-88228

PART NO.	DIAMETER	PITCH	MATERIAL	BLADES	ROTATION
43590A40	10-1/4	14-1/2C	AL	3	RH
89854A 4	10-1/4	14-1/2C	AL	3	RH
19642A40	10-3/8	14-1/2C	AL	3	RH
43586A40	10-3/8	13C	AL	3	RH
86848A 4	10-3/8	13C	AL	3	RH
19640A40	10-3/8	13C	AL	3	RH
43588A 5	10-3/8	13C	SS	3	RH
90780A 4	10-3/8	13C	SS	3	RH
19644A 5	10-3/8	13C	SS	3	RH
43584A40	10-3/8	11C	AL	3	RH
89852A 4	10-3/8	11C	AL	3	RH
19638A40	10-3/8	11C	AL	3	RH
43582A10	10-3/8	9-1/2	AL	3	RH
89850A 1	10-3/8	9-1/2	AL	3	RH
19636A10	10-3/8	9-1/2	AL	3	RH

MERC 18 & 25 (Chopper Propellers)

Thrust Hub 858498 Nut 11-88228

PART NO.	DIAMETER	PITCH	MATERIAL	BLADES	ROTATION
92764A 4	10-3/8	18C	SS	3	RH
92764A 5	10-3/8	18C	SS	3	RH
43592A61	10-3/8	18C	SS	3	RH

Mercury 200 (20HP)

MERC 200 (20Hp) 1963-1979
8 Tooth Spline
Thrust Hub 23-85964A1, Spacer 23-85964A1, Nut 11-64075A1

Length	Current MPH	Propeller Size	Material	Blades	Style	Quicksilver P/N	OEM P/N	Hub System
To 14'	18-22	9-7/8 X 11 RH	AL	2	Black Diamond	N.L.A.	N.L.A.	Rubber Bushing
14-16	up to 20	10 X 9 RH	AL	3	Black Diamond	N.L.A.	N.L.A.	Rubber Bushing

MARK 28/28A & MERC 200/250 AUTO. TRANS.

PART NO.	DIAMETER	PITCH	MATERIAL	BLADES	ROTATION	STATUS
28036A 1						N.L.A.
28037A 1						N.L.A.
28038A 1						N.L.A.

MARK 50 & 55 (14 SPLINE HUB)

PART NO.	DIAMETER	PITCH	MATERIAL	BLADES	ROTATION	STATUS
22105A 1						N.L.A.
22575A 1						N.L.A.
22636A 1						N.L.A.
22814A 1						N.L.A.
22914A 1						N.L.A.
23586A 1						N.L.A.
23587A 1						N.L.A.
26666A 1						N.L.A.
27028A 1						N.L.A.

MARK 35A/55/55A/58/58A & MERC 300/350/400/500

(11 SPLINE HUB, NON-THRU HUB EXHAUST)

PART NO.	DIAMETER	PITCH	MATERIAL	BLADES	ROTATION	STATUS
22105A 2						N.L.A.
22575A 2						N.L.A.
22636A 2						N.L.A.
22814A 2						N.L.A.
22914A 2						N.L.A.
23586A 2						N.L.A.
23587A 2						N.L.A.
25773A 2						N.L.A.
26666A 2						N.L.A.

PART NO.	DIAMETER	PITCH	MATERIAL	BLADES	ROTATION	STATUS
27028A 2						N.L.A.
28765A 2						N.L.A.
29296A 2						N.L.A.
29958A 2						N.L.A.
29986A 2						N.L.A.

MERC 350/450/500/500SS

(11 SPLINE HUB, THRU HUB EXHAUST)
Thrust Hub 38859A1 Washer 12-32007 Nut 11-69578Q1

DIAMETER	MATERIAL	BLADES	Style	Quicksilver P/N	OEM P/N
10-3/4 X 10 RH	AL	3	Black Diamond	N.L.A.	N.L.A.

Merc 400/402/500/Merc 650/700 (3 Cyl)/Merc 35-70

Merc 35-70 (13 Spline Hub)
NLA = 48-56228A1, 48-56228A4, 48-56230A1, 48-56230A4, 48-56250A1, 48-56250A4, 48-63452A1, 48-63452A4, 48-64726A1, 48-64726A4
48-63538A4, 48-56232A4, 48-56252A4, 48-63454A4, 48-63540A4, 48-63546A1, 48-63460A1, 48-63548A1, 48-63

PART NO.	DIAMETER	PITCH	MATERIAL	BLADES	ROTATION	STATUS OR SUPERSESSION
73146A 4	10	19C	AL	3	RH	73146A40
73146A40	10	19C	AL	3	RH	AVAIL.
64724A 1 & A 2	10-3/4	17	AL	3	RH	73144A40
64724A 4	10-3/4	17C	AL	3	RH	73144A40
73144A 4	10	17C	AL	3	RH	73144A40
73144A40	10	17C	AL	3	RH	AVAIL.
61824A 1 & A 2	10-3/4	16	AL	3	RH	73140A40
61824A 4	10-3/4	16C	AL	3	RH	73144A40
63538A 1	10-3/4	16	BR	3	RH	73140A40
73142A 4	10	16C	AL	3	RH	73142A40
73142A40	10	16C	AL	3	RH	AVAIL.
73138A40	10	16C	AL	3	RH	91818A 5
91818A 4	10	16C	SS	3	RH	91818A 5
73138A40	10	16C	SS	3	RH	AVAIL.
91818A 5	10	16C	SS	3	RH	AVAIL.
73138A40	10	16C	SS	3	RH	AVAIL.
56232A 1	10-3/4	15	AL	3	RH	73136A40
73136A40	10-3/4	15	AL	3	RH	AVAIL.
56252A 1	10-3/4	15	BR	2	RH	73136A40
73136A40	10-3/4	15	BR	2	RH	AVAIL.
63454A 1	10-3/4	15	BR	2	RH	73136A40
73136A40	10-3/4	15	BR	2	RH	AVAIL.
63540A 1	11	15	BR	3	RH	73140A40
73140A 4	10-1/8	15	AL	3	RH	73140A40
73140A40	10-1/8	15C	AL	3	RH	AVAIL.
61822A 1	11	15	AL	3	RH	73140A40
61822A 4	11	15C	AL	3	RH	73140A40
76232A 4	10-1/8	15C	SS	3	RH	855862A 5
855862A 5	10-1/8	15C	SS	3	RH	AVAIL.
76232A5	10-1/8	15C	SS	3	RH	855862A 5
855862A 5	10-1/8	15C	SS	3	RH	AVAIL.
61820A 1 &A 2	11-1/4	14	AL	3	RH	73138A40
61820A 4	11-1/4	14C	AL	3	RH	73138A40
63542A 1	11-1/4	14	BR	3	RH	73138A40
63542A 4	11-1/4	14C	BR	3	RH	73140A40

PART NO.	DIAMETER	PITCH	MATERIAL	BLADES	ROTATION	STATUS OR SUPERSESSION
73138A 4	10-1/4	14C	AL	3	RH	73138A40
73138A40	10-1/4	14C	AL	3	RH	AVAIL.
76230A 4	10-1/4	14C	SS	3	RH	855860A 5
76230A 5	10-1/4	14C	SS	3	RH	855860A 5
56236A 1	10-3/4	13	AL	3	RH	73136A40
56236A 4	10-3/4	13C	AL	3	RH	73136A40
56234A 1	11	13	AL	2	RH	73136A40
56234A 4	11	13C	AL	2	RH	73136A40
56254A 1	11	13	BR	2	RH	73136A40
56254A 4	11	13C	BR	2	RH	73136A40
61818A 1 & A2	11-1/2	13	AL	3	RH	73136A40
61818A 4	11-1/2	13C	AL	3	RH	73136A40
63456A 1	11	13	BR	2	RH	73136A40
63456A 4	11	13C	BR	2	RH	73136A40
63544A 1	11-1/2	13	BR	3	RH	73136A40
63544A 4	11-1/2	13C	BR	3	RH	73136A40
73136A40	10-3/8	13C	AL	3	RH	AVAIL.
73136A40	10-3/8	13C	AL	3	RH	AVAIL.
76228A 4	10-3/8	13C	SS	3	RH	855858A 5
76228A 5	10-3/8	13C	SS	3	RH	855858A 5
73134A40	10-3/8	13C	SS	3	RH	AVAIL.
56238A 1	11	12	AL	2	RH	73136A40
73134A40	11	12	AL	2	RH	AVAIL.
56238A 4	11	12C	AL	2	RH	73136A40
73134A40	11	12C	AL	2	RH	AVAIL.
56240A 1	10-3/4	12	AL	3	RH	73136A40
73134A40	10-3/4	12	AL	3	RH	AVAIL.
56240A 4	10-3/4	12C	AL	3	RH	73136A40
73134A40	10-3/4	12C	AL	3	RH	AVAIL.
56256A 1	11	12	BR	2	RH	73136A40
73134A40	11	12	BR	2	RH	AVAIL.
56256A 4	11	12C	BR	2	RH	73136A40
73134A40	11	12C	BR	2	RH	AVAIL.
61816A 1	11-3/4	12	AL	3	RH	73136A40
61816A 4	11-3/4	12C	AL	3	RH	73136A40
73134A40	11-3/4	12C	AL	3	RH	AVAIL.
63458A 1	11	12	BR	2	RH	73136A40
73136A40	11	12	BR	2	RH	AVAIL.
63458A 4	11	12C	BR	2	RH	73136A40
73136A40	11	12C	BR	2	RH	AVAIL.
63546A 4	11-3/4	12C	BR	3	RH	73136A40
73134A 4	10-5/8	12C	AL	3	RH	73134A40
73134A40	10-5/8	12C	AL	3	RH	AVAIL.
79792A 4	10-5/8	12C	SS	3	RH	855856A 5
79792A 5	10-5/8	12C	SS	3	RH	855856A 5
73132A40	10-5/8	12C	SS	3	RH	AVAIL.
56242A 1	11	11	AL	2	RH	NLA
56242A 4	11	11C	AL	2	RH	73136A40
73136A40	11	11C	AL	2	RH	AVAIL.
56244A 1	10-3/4	11	AL	3	RH	NLA
56244A 4	10-3/4	11C	AL	3	RH	73136A40
73136A40	10-3/4	11C	AL	3	RH	AVAIL.
56258A 1	11	11	BR	2	RH	NLA
56258A 4	11	11C	BR	2	RH	73136A40

PART NO.	DIAMETER	PITCH	MATERIAL	BLADES	ROTATION	STATUS OR SUPERSESSION
73136A40	11	11C	BR	2	RH	AVAIL.
61814A 1 & A2	12	11	AL	3	RH	73132A40
61814A 4	12	11C	AL	3	RH	73132A40
63460A 4	11	11C	BR	2	RH	73136A40
73136A40	11	11C	BR	2	RH	AVAIL.
85632A 4	10-7/8	11C	AL	3	RH	85632A40
85632A40	10-7/8	11C	AL	3	RH	AVAIL.
42740A10	12	10-1/2C	AL	3	RH	42740A11
42740A11	12	10-1/2C	AL	3	RH	AVAIL.
61812A 1	12-1/4	10	AL	3	RH	73132A40
61812A 4	12-1/4	10C	AL	3	RH	73132A40
73132A 4	11-1/4	10C	AL	3	RH	73132A40
73132A40	11-1/4	10C	AL	3	RH	AVAIL.
62274A 1 & A2	12-1/4	9	AL	3	RH	73132A40
62274A 4	12-1/4	9C	AL	3	RH	73132A40
87818A 1	12-1/4	9	AL	3	RH	87818A11
87818A10	12-1/4	9C	AL	3	RH	87818A11
97868A 1	12-1/4	9	SS	3	RH	97868A10
97868A 5	12-1/4	9	SS	3	RH	97868A10
42738A10	12-1/2	8C	AL	3	RH	42738A11

Merc 700/800 Direct Reversing-RH Rotation

Includes Merc 650 (4 Cyl.) Thru 1500/Mercury 75/90 (3 Cyl.), 100/115 (4 Cyl.) and Inline 6 Cyl.
NLA = 48-49624A4, 48-49628A4, 48-49622A4, 48-49626A4, 48-46162A4, 48-49620A4, 48-46160A4, 48-49618A4, 48-46158A4, 48-49616A4
48-59138A4, 48-30870A1, 48-31448

Part No.	Diameter	Pitch	Material	Blades	Rotation	Status or Supersession
52012A3	13	25	AL	3	RH	77350A45
52012A4	13	25C	AL	3	RH	16996A36
72758A4	12-5/8	25C	SS	3	RH	16996A36
72758A5	12-5/8	25C	SS	3	RH	16996A36
31082A1	13-3/4	23	AL	2	RH	77344A45
77344A45	13-3/4	23	AL	2	RH	AVAIL.
32386A3	13-3/4	23	AL	2	RH	77348A45
32386A4	13-3/4	23C	AL	2	RH	77350A45
52008A3	13	23	AL	3	RH	77348A45
52008A4	13	23C	AL	3	RH	77350A45
65736A1	13	23	AL	3	RH	77348A45
65736A4	13	23C	AL	3	RH	77350A45
66140A1	13	23	SS	3	RH	16994A36
66140A4	13	23C	SS	3	RH	16994A36
72760A4	12-3/4	23C	SS	3	RH	16994A36
72760A5	12-3/4	23C	SS	3	RH	16994A36
77350A4	12-1/2	23C	AL	3	RH	77350A45
77350A40	12-1/2	23C	AL	3	RH	77350A45
31454A3	13-3/4	21	AL	2	RH	77346A45
31454A4	13-3/4	21C	AL	2	RH	77348A45
32746A3	13	21	AL	3	RH	77346A45
32746A4	13	21C	AL	3	RH	77348A45
49632A3	13-3/4	21	AL	2	RH	77346A45
49632A4	13-3/4	21C	AL	2	RH	77348A45
53892A3	13-3/4	21	AL	3	RH	77346A45
53892A4	13-3/4	21C	AL	3	RH	77348A45
63744A1	13-1/4	21	SS	3	RH	16992A36

Part No.	Diameter	Pitch	Material	Blades	Rotation	Status or Supersession
63744A4	13-1/4	21C	SS	3	RH	16992A36
67280A1	13	21	AL	3	RH	77346A45
67280A4	13	21C	AL	3	RH	77348A45
72500A4	13	21C	SS	3	RH	16992A36
72500A5	13	21C	SS	3	RH	16992A36
77348A4	12-3/4	21C	AL	3	RH	77348A45
77348A40	12-3/4	21C	AL	3	RH	77348A45
30388A1	13-1/4	19	BR	2	RH	NLA
31080A1	13-1/4	19	BR	2	RH	NLA
31456A3	13-3/4	19	BR	2	RH	NLA
31456A4	13-3/4	19C	BR	2	RH	77346A45
32388A3	13-3/4	19	AL	3	RH	NLA
32388A4	13-3/4	19C	AL	3	RH	77346A45
32748A3	13	19	BR	3	RH	NLA
32748A4	13	19C	BR	3	RH	77346A45
32750A3	13	19	AL	3	RH	NLA
32750A4	13	19C	AL	3	RH	77346A45
53896A3	13-3/4	19	AL	3	RH	77344A45
53896A4	13-3/4	19C	AL	3	RH	77346A45
65024A1	13-3/4	19	AL	3	RH	77344A45
65024A4	13-3/4	19C	AL	3	RH	77346A45
65588A1	13	19	AL	3	RH	NLA
65588A4	13	19C	AL	3	RH	77346A45
66138A1	13-1/2	19	SS	3	RH	16990A36
66138A4	13-1/2	19C	SS	3	RH	16990A36
72762A4	13-1/4	19C	SS	3	RH	16990A36
72762A5	13-1/4	19C	SS	3	RH	16990A36
77346A4	13	19C	AL	3	RH	77346A45
77346A40	13	19C	AL	3	RH	77346A45
16988A5	13	18C	SS	3	RH	16988A36
29658A1/A2/A3	13	17	BR	2	RH	77344A45
77344A45	13	17	BR	2	RH	AVAIL.
29658A4	13	17C	BR	2	RH	NLA
30390A1	13-3/4	17	BR	3	RH	77344A45
77344A45	13-3/4	17	BR	3	RH	AVAIL.
31072A2 & A3	13	17	AL	2	RH	77344A45
77344A45	13	17	AL	2	RH	AVAIL.
31072A4	13	17C	AL	2	RH	NLA
31458A3	13	17	BR	3	RH	77344A45
77344A45	13	17	BR	3	RH	AVAIL.
31458A4	13	17C	BR	3	RH	77344A45
32264A3	13	17	AL	3	RH	77344A45
77344A45	13	17	AL	3	RH	AVAIL.
32264A4	13	17C	AL	3	RH	77344A45
37902A2	12	17	AL	3	RH	77344A45
37902A3	12	17	AL	3	RH	77344A45
37902A4	12	17C	AL	3	RH	NLA
53900A3	14	17	AL	3	RH	77342A45
53900A4	14	17C	AL	3	RH	77344A45
65022A1	14	17	AL	3	RH	77342A45
65022A4	14	17C	AL	3	RH	77344A45
854360A45	14	17C	AL	3	RH	AVAIL.
65748A1	13	17	AL	3	RH	77344A45
77344A45	13	17	AL	3	RH	AVAIL.

Part No.	Diameter	Pitch	Material	Blades	Rotation	Status or Supersession
65748A4	13	17C	AL	3	RH	77344A45
72764A4	13-1/2	17C	SS	3	RH	16988A36
72764A5	13-1/2	17C	SS	3	RH	16988A36
77344A4	13-1/4	17C	AL	3	RH	77344A45
77344A40	13-1/4	17C	AL	3	RH	77344A45
16986A5	13-1/8	16C	SS	3	RH	16986A36
29660A1	13	15	BR	2	RH	77344A45
29660A4	13	15C	BR	2	RH	77344A45
31074A2 & A3	13	15	AL	2	RH	77344A45
31074A4	13	15C	AL	2	RH	77344A45
32390A3	14	15	AL	3	RH	77340A45
32390A4	14	15C	AL	3	RH	77342A45
37900A2	12-1/2	15	AL	3	RH	77344A45
37900A3	12-1/2	15	AL	3	RH	77344A45
37900A4	12-1/2	15C	AL	3	RH	77344A45
77342A4	13-3/4	15C	AL	3	RH	77342A45
77342A40	13-3/4	15C	AL	3	RH	77342A45
87444A4	13-3/4	15C	SS	3	RH	17314A36
87444A5	13-3/4	15C	SS	3	RH	17314A36
17314A5	13-3/8	14C	SS	3	RH	17314A36
29662A4	13-1/2	13C	BR	2	RH	77344A45
31076A4	13-1/2	13C	AL	2	RH	77344A45
32392A3	13-1/2	13	AL	3	RH	77338A45
32392A4	13-1/2	13C	AL	3	RH	77340A45
37898A4	13	13C	AL	3	RH	77344A45
58826A3	14	13	AL	3	RH	77338A45
58826A4	14	13C	AL	3	RH	77340A45
77340A4	14	13C	AL	3	RH	77340A45
77340A40	14	13C	AL	3	RH	77340A45
17312A5	14	12C	SS	3	RH	17312A36
12606A5	14	12C	SS	3	RH	17312A36
30396A1 & A3	14	11	AL	3	RH	77338A45
30396A4	14	11C	AL	3	RH	77340A45
35936A3	14	11	AL	3	RH	77338A45
35936A4	14	11C	AL	3	RH	77340A45
77338A4	14	11	AL	3	RH	77338A45
77338A40	14	11C	AL	3	RH	77338A45
17310A5	14	10C	SS	3	RH	17310A36
12604A5	14	10C	SS	3	RH	17310A36

Mercury V-6 Models (W/Large Gearcase 4-3/4 Inch)

Standard Propeller
1976 and 1977 - Thrust Hub - 72894 - NLA Washer 12-31211A3 Tab Washer 14-816629 Nut 11-52707Q1
1978 and Up - Thrust Hub - 12-835467 1 Washer 12-31211A3 Tab Washer 14-816629 Nut 11-52707Q1

Part No.	Diameter	Pitch	Material	Blades	Rotation	Status or Supersession
73514A4	13-3/8	25C	AL	3	RH	78126A45
78126A4	13-3/8	25C	AL	3	RH	78126A45
78126A40	13-3/8	25C	AL	3	RH	78126A45
79796A4	13-3/8	25C	SS	3	RH	16550A46
16550A46	13-3/8	25C	SS	3	RH	Avail.
79796A5	13-3/8	25C	SS	3	RH	16550A46
16550A46	13-3/8	25C	SS	3	RH	Avail.
75724A4	13-1/2	23C	SS	3	RH	16320A46
75724A5	13-1/2	23C	SS	3	RH	16320A46

Part No.	Diameter	Pitch	Material	Blades	Rotation	Status or Supersession
16322A4	13-3/8	25C	SS	3	RH	16550A46
16550A46	13-3/8	25C	SS	3	RH	Avail.
16322A5	13-3/8	25C	SS	3	RH	16550A46
16550A46	13-3/8	25C	SS	3	RH	Avail.
16321A5	13-1/2	23C	SS	3	LH	16321A46
16320A4	13-1/2	23C	SS	3	RH	16320A46
16320A5	13-1/2	23C	SS	3	RH	16320A46
73512A4	13-1/2	23C	AL	3	RH	832834A45
78124A4	13-1/2	23C	AL	3	RH	832834A45
78124A40	13-1/2	23C	AL	3	RH	832834A45
88442A4	13-3/4	21C	SS	3	RH	16318A46
74268A4	13-3/4	21C	SS	3	RH	16318A46
73510A4	13-3/4	21C	AL	3	RH	832832A45
73982A4	13-3/4	21C	SS	3	RH	16318A46
73982A5	13-3/4	21C	SS	3	RH	16318A46
16319A5	13-3/4	21C	SS	3	LH	16319A46
16318A5	13-3/4	21C	SS	3	RH	16318A46
16318A4	13-3/4	21C	SS	3	RH	16318A46
78122A4	13-3/4	21C	AL	3	RH	832832A45
78122A40	13-3/4	21C	AL	3	RH	832832A45
73508A4	14-1/4	19C	AL	3	RH	832830A45
73980A4	14	19C	SS	3	RH	16316A46
73980A5	14	19C	SS	3	RH	16317A46
16317A5	14	19C	SS	3	LH	16317A46
16316A5	14	19C	SS	3	RH	16316A46
78120A4	14	19C	AL	3	RH	832830A45
78120A40	14	19C	AL	3	RH	832830A45
73506A4	14-3/4	17C	AL	3	RH	832828A45
78118A4	14-1/2	17C	AL	3	RH	832828A45
78118A40	14-1/2	17C	AL	3	RH	832828A45
79794A4	14-1/2	17C	SS	3	RH	16314A46
79794A5	14-1/2	17C	SS	3	RH	16314A46
16315A5	14-1/2	17C	SS	3	LH	16315A46
16314A5	14-1/2	17C	SS	3	RH	16314A46
16312A5	14-1/2	15C	SS	3	RH	16312A46
73504A4	15-1/4	15C	AL	3	RH	78116A45
78116A4	16	15C	AL	3	RH	78116A45
78116A40	16	15C	AL	3	RH	78116A45
93272A4	14-1/2	15C	SS	3	RH	16312A46
93272A40	14-1/2	15C	SS	3	RH	NLA
73502A4	16	13C	AL	3	RH	78114A45
78114A4	16	13C	AL	3	RH	78114A45
78114A40	16	13C	AL	3	RH	78114A45
73500A4	16	11C	AL	3	RH	78112A45
78112A4	16	11C	AL	3	RH	78112A45
78112A40	16	11C	AL	3	RH	78112A45
16316A4	14	19	SS	3	RH	16316A46
16315A4	14-1/2	17	SS	3	LH	16315A46
16314A4	14-1/2	17	SS	3	RH	16314A46
16312A4	14-1/2	15	SS	3	RH	16312A46

Mercury V-6 Models-Chopper (Gearcase 4-3/4 Inch)

Thrust Hub - 13191A1 Tab Washer 14-816629 Nut 11-52707Q1

Part No.	Diameter	Pitch	Material	Blades	Rotation	Status or Supersession
98246A4	14-1/4	30C	SS	3	RH	NLA
98246A5	14-1/4	30C	SS	3	RH	NLA
89860A4	14-1/2	28C	SS	3	RH	13372A62
89860A5	14-1/2	28C	SS	3	RH	13372A62
13373A5	14-1/2	28C	SS	3	LH	13373A62
13372A5	14-1/2	28C	SS	3	RH	13372A62
98245A1	14-1/2	28	SS	3	LH	13373A62
89858A4	14-1/2	26C	SS	3	RH	13370A62
93593A1	14-1/2	26	SS	3	LH	13371A62
13371A5	14-1/2	26C	SS	3	LH	13371A62
13370A5	14-1/2	26C	SS	3	RH	13370A62
89858A5	14-1/2	26C	SS	3	RH	13370A62
77320A4	14-1/2	24C	SS	3	RH	13368A62
93591A1	14-1/2	24C	SS	3	LH	13369A62
77320A5	14-1/2	24C	SS	3	RH	13368A62
13369A5	14-1/2	24C	SS	3	LH	13369A62
13368A5	14-1/2	24C	SS	3	RH	13368A62
89856A4	14-1/2	22C	SS	3	RH	13366A62
89856A5	14-1/2	22C	SS	3	RH	13366A62
13366A5	14-1/2	22C	SS	3	RH	13366A62

Mercury V-6 Models-Trophy (Gearcase 4-3/4 Inch)

Large Hub
Thrust Hub - 12-835467 1 Tab Washer 14-816629 Nut 11-52707Q1

Part No.	Diameter	Pitch	Material	Blades	Rotation	Status or Supersession
825904A41	14	21	SS	4	RH	825902A46
825908A40	14	23	SS	4	RH	825906A46
825910A40	14	24	SS	4	RH	825910A46
825912A40	14	25	SS	4	RH	825912A46
825914A40	14	26	SS	4	RH	NLA
825908A41	14	23	SS	4	RH	825906A46
825910A41	14	24	SS	4	RH	825910A46
825912A41	14	25	SS	4	RH	NLA
825914A41	14	26	SS	4	RH	NLA

MARINER ELECTRIC MOTOR

Mariner-Trolling Motor

Nut 79719 - NLA Pin 17-70733 Retainer 79719 - NLA

Part No.	Diameter	Pitch	Material	Blades	Rotation	Status or Supersession
18024A__	10-1/2	6	PL BL	2	RH	18024A5
18430A__	10-1/2	6	PL CL	2	RH	18024A5
87842A2	10-1/2	6	PL	2	RH	18024A5
18024A5	10	6	PL	2	RH	AVAIL.

Mariner-Thruster Direct Drive

Trolling Motor
Nut 79719 - NLA Washer 26-72462 Pin 17-70733

Part No.	Diameter	Pitch	Material	Blades	Rotation	Status or Supersession
17530A__	9	3.2	PL BL	2	RH	18022A5
18530A__	9-1/4	3.2	PL CL	2	RH	18022A5
18022A__	9-1/4	3-1/4	PL BL	2	RH	18022A5
18428A5	9-1/4	3-1/4	PL CL	2	RH	AVAIL.
18512A__	9-1/4	3-1/4	PL CL	2	RH	18428A5
18022A5	9-1/4	3	PL BL	2	RH	AVAIL.

Mariner-R33, RX33, T33, R45, RL45, RX45, T45

Trolling Motor
Nut 818911--2 Washer 23-35935 Pin 17-70733

Part No.	Diameter	Pitch	Material	Blades	Rotation	Status or Supersession
813728A__	11	5	PL BL	2	RH	48-813730A 3
813730A__	11	5	PL CL	2	RH	48-813730A 3

Mariner-Thruster (MotorGuide)(Machete)

Trolling Motor

Part No.	Diameter	Pitch	Material	Blades	Rotation	Status or Supersession
824236T	9-1/2	2-5/8	PL CL	2	RH	AVAIL.
801889	10	3-1/2	PL CL	2	RH	MAF12406

Mariner V-6 Models (W/Large Gearcase 4-3/4 Inch)

Thrust Hub 12-835467Q01 Tab Washer 15-816629Q Washer 12-31211A3 Nut 11-52707Q1

Part No.	Diameter	Pitch	Material	Blades	Rotation	Status or Supersession
78126A4	13-3/8	25C	AL	3	RH	N.L.A.
78126A40	13-3/8	25C	AL	3	RH	N.L.A.
79796A 4	13-3/8	25C	SS	3	RH	NLA
79796A 5	13-3/8	25C	SS	3	RH	NLA
16322A 5	13-3/8	25C	SS	3	RH	NLA
75724A 4	13-1/2	23C	SS	3	RH	48- 16320A46
16321A 5	13-1/2	23C	AL	3	LH	48- 16321A46
16320A 5	13-1/2	23C	AL	3	RH	48- 16320A46
78124A 4	13-1/2	23C	AL	3	RH	48-832834A45
78124A40	13-1/2	23C	AL	3	RH	48-832834A45
73982A 4	13-3/4	21C	SS	3	RH	48- 16318A46
73982A 5	13-3/4	21C	SS	3	RH	48- 16318A46
16319A 5	13-3/4	21C	SS	3	LH	48- 16318A46
16318A 5	13-3/4	21C	SS	3	RH	48- 16318A46
78122A 4	13-3/4	21C	SS	3	RH	48-832832A45
78122A40	13-3/4	21C	SS	3	RH	48-832832A45
73980A 4	14	19C	SS	3	RH	48- 16316A46
73980A 5	14	19C	SS	3	RH	48- 16316A46
16317A 5	14	19C	SS	3	LH	48- 16317A46
16316A 5	14	19C	SS	3	RH	48- 16316A46
78118A 4	14-1/2	17C	SS	3	RH	48-832828A45
78118A40	14-1/2	17C	SS	3	RH	48-832828A45
79794A 4	14-1/2	17C	SS	3	RH	48- 16314A46
79794A 5	14-1/2	17C	SS	3	RH	48- 16314A46
16315A 5	14-1/2	17C	SS	3	LH	48- 16315A46
16314A5	14-1/2	17C	SS	3	RH	48- 16315A46
78116A 4	16	15C	SS	3	RH	48- 78116A45

Part No.	Diameter	Pitch	Material	Blades	Rotation	Status or Supersession
78116A40	16	15C	SS	3	RH	48- 78116A45
93272A 4	14-1/2	15C	SS	3	RH	48- 16312A46
93272A 5	14-1/2	15C	SS	3	RH	48- 16312A46
16312A 5	14-1/2	15C	SS	3	RH	48- 16312A46
16312A 4	14-1/2	15	SS	3	RH	48- 16312A46
78114A 4	16	13C	SS	3	RH	48- 78114A45
78114A40	16	13C	SS	3	RH	48- 78114A45
78112A 4	16	11C	SS	3	RH	48- 78112A45
78112A40	16	11C	SS	3	RH	48- 78112A45
16320A 4	13-3/8	25	SS	3	RH	48- 16320A46
16321A 4	13-1/2	23	SS	3	LH	16321A46
16322A 4	13-3/8	25	SS	3	RH	16322A46
16312A 4	14-1/2	15	SS	3	RH	48- 16312A46
16315A 4	14-1/2	17	SS	3	LH	48- 16315A46
16316A 4	14	19	SS	3	RH	48- 16316A46
16317A 4	14	19	SS	3	LH	48- 16317A46
16318A 4	13-3/4	21	SS	3	RH	48- 16318A46

MARINER OUTBOARD

Mariner 2 (6A1)

Cotter Pin 18-82134M Drive Pin 17-81896M

Part No.	Diameter	Pitch	Material	Blades	Rotation	Status or Supersession
80409M	7-1/4	5-1/2	AL	3	RH	NLA
43110M	7-1/4	5	AL	3	RH	NLA
80410M	7-1/4	4-1/2	AL	3	RH	AVAIL.
93032M	7-1/4	4	PL	3	RH	AVAIL.

Mariner 2.5/3.3 A856377 and Up

Cotter Pin 18-95295 Shear Pin 17-815111 (AL Prop), 17-815111--1 (PL Prop)

Part No.	Diameter	Pitch	Material	Blades	Rotation	Status or Supersession
815083	7-3/8	6	PL	3	RH	AVAIL.
815084	7-3/8	6	AL	3	RH	AVAIL.
815084--1	7-3/8	6	AL	3	RH	AVAIL.

Mariner 3.5 (642)

NLA = 48-80176M, 48-80177M, 48-80304M
Nut 11-80103M Cotter Pin 18-82134M Thrust Hub 12-81855M - NLA Drive Pin 17-17554M

Part No.	Diameter	Pitch	Material	Blades	Rotation	Status or Supersession
80178M	7-1/2	4	AL	3	RH	NLA
82861M	7-1/2	4	AL	3	RH	NLA

Mariner 4 (6E) & 5 (6E3)

NLA = 48-81016M
Nut 11-859931 Cotter Pin 18-82132M Drive Pin 17-17554M

Part No.	Diameter	Pitch	Material	Blades	Rotation	Status or Supersession
96593M	7-1/4	8-1/4	AL	3	RH	NLA
96590M	7-1/2	8	AL	3	RH	AVAIL.
96592M	7-1/4	7-1/4	AL	3	RH	NLA
96591M	7-1/2	7	AL	3	RH	AVAIL.
81015M	7-1/4	6-1/2	AL	3	RH	NLA

Part No.	Diameter	Pitch	Material	Blades	Rotation	Status or Supersession
82825M	7-1/4	5	AL	3	RH	NLA

Mariner 4/5 A855097 and Up

Thrust Hub 16145Q01 Washer 12-16146 Nut 11-16147

Part No.	Diameter	Pitch	Material	Blades	Rotation	Status or Supersession
16143	8-3/8	8	AL	3	RH	812950
16142	8-3/8	7	AL	3	RH	812949
16144	8-3/8	6	AL	3	RH	AVAIL.
16836A1	8-3/8	6	AL High Reverse	3	RH	812951A1

Mariner 6 (647) & 8 (655 / 677)

Without Thru Hub Exhaust
NLA = 48-80546M, 48-82765
Nut 11-80545M Cotter Pin 18-82132M Drive Pin 17-81901M

Part No.	Diameter	Pitch	Material	Blades	Rotation	Status or Supersession
80548M	9	9	AL	3	RH	NLA
82766	8-1/4	9	AL	3	RH	AVAIL.
82764	8-1/4	8	AL	3	RH	AVAIL.
80547M	9	7	AL	3	RH	AVAIL.
82763	8-1/4	6-1/2	AL	3	RH	NLA
8109M	9	6-1/4	AL	3	RH	NLA
94780M	9	5-3/4	AL	3	RH	NLA
94781M	9	5	AL	3	RH	NLA

Mariner 6 (6HB) & 8 (6G1)

With Thru Hub Exhaust
Nut 11-859933 Cotter Pin 18-815026 Thrust Hub (Fwd) 23-11654M Thrust Hub (Rear) 12-84275M

Part No.	Diameter	Pitch	Material	Blades	Rotation	Status or Supersession
11672M	8	8	AL	3	RH	NLA
11673M	8	8	AL	3	RH	AVAIL.
11896M	9	9	AL	3	RH	NLA
11674M	8	8	AL	3	RH	NLA
11897M	9	9	AL	3	RH	NLA

Mariner 9.9C (682) & 15C (684)

Nut 11-859933 Cotter Pin 18-815026 Thrust Hub (Fwd) 23-859916 Thrust Hub (Rear) 12-84275M

Part No.	Diameter	Pitch	Material	Blades	Rotation	Status or Supersession
84079M	9-1/4	12	AL	3	RH	N.L.A.
84080M	9-1/4	10-1/2	AL	3	RH	QA3914R
QA3914T	9-1/4	10-1/2	AL	3	RH	QA3914R
84407M	9-1/2	9-3/4	AL	3	RH	AVAIL.
84081M	9-1/4	9	AL	3	RH	QA3906R
84082M	9-1/4	8	AL	3	RH	N.L.A.
QA3902T	9-1/4	8	AL	3	RH	N.L.A.
94786M	9-3/4	8	AL	3	RH	AVAIL.
84083M	9-1/2	6.5	AL	3	RH	AVAIL.
94787M	9-3/4	6.5	AL	3	RH	AVAIL.

Mariner 6/8/9/15 A197112 and Up

Thrust Hub 42037 Design I, 821932 Design II Spacer 23-42091-1 Nut 11-40140

Part No.	Diameter	Pitch	Material	Blades	Rotation	Status or Supersession
17874A12	9	10-1/2	AL	3	RH	48-828158A12
42522A__	9	9	AL	3	RH	48-828156A12
42520A10	9-1/4	7	AL	3	RH	48-828152A12
42524A__	9-3/4	6-1/2	AL High Reverse	3	RH	48-828150A12

Mariner 15 (6510 20 (653) 25 (648/694)

Without Thru Hub Exhaust
NLA = 48-80264M, 48-80681M, 48-80925M, 48-80926M, 48-80947M, 48-96629M
Nut 859946 Cotter Pin 18-82132M Drive Pin 17-81900M

Part No.	Diameter	Pitch	Material	Blades	Rotation	Status or Supersession
82770	9-1/4	12	AL	3	RH	NLA
96622M	9-1/2	11-1/2	AL	3	RH	NLA
80955M	9-1/4	11-1/4	AL	3	RH	
96623M	9-1/4	11-1/4	AL	3	RH	AVAIL
82769	9-1/4	11	AL	3	RH	
80263M	9-1/4	10-3/4	AL	3	RH	N.L.A.
96624M	9-1/4	10-3/4	AL	3	RH	AVAIL
82768	9	10	AL	3	RH	48-8M0060280
96625M	9-1/4	10	AL	3	RH	AVAIL
80546M	9-1/4	9-1/4	AL	3	RH	NLA
80265M	9-1/4	9	AL	3	RH	N.L.A.
96626M	9-1/4	9	AL	3	RH	N.L.A.
80924M	9-1/4	8	AL	3	RH	NLA
96627M	9-1/4	8	AL	3	RH	NLA
82767	9-1/4	7	AL	3	RH	NLA
96628M	9-1/4	7	AL	3	RH	NLA
96630M	9-1/4	5	AL	3	RH	NLA

Mariner 20 (6A9), 25 (690/695), 28 (664), 30 (689)

With Thru Hub Exhaust
NLA = 48-80262M
Nut 11-81774M Cotter Pin 18-82132M Thrust Hub (Fwd) 859917
20/25/30 - Thrust Hub (Rear) 859895 Spacer 85905
28 - Thrust Hub (Rear) 23-82796M (NLA) Spacer 23-81651M

Part No.	Diameter	Pitch	Material	Blades	Rotation	Status or Supersession
84977M	9-7/8	14	AL	3	RH	AVAIL.
82827M	9-7/8	13	AL	3	RH	QA3814R
QA3814T	9-7/8	13	AL	3	RH	QA3814R
82826M	9-7/8	12	AL	3	RH	QA3810R
88168A4	9	12	SS	3	RH	NLA
84976M	9-7/8	11-1/4	AL	3	RH	QA3810R
81649M	9-7/8	10-1/2	AL	3	RH	QA3808R
81647M	9-7/8	9	AL	3	RH	AVAIL.
88166A4	10	9	SS	3	RH	NLA
81648M	9-7/8	8	AL	3	RH	AVAIL.

Mariner 20 & 25 S/N 6535603 and Above

Standard
Thrust Hub 858498 Hub 11-88228

Chopper
Thrust Hub 858498 Hub 11-88228

Part No.	Diameter	Pitch	Material	Blades	Rotation	Status or Supersession
Standard						
4590A40	10-1/4	14-1/2C	AL	3	RH	48- 19642A40
89854A 4	10-1/4	14-1/2C	AL	3	RH	48- 19642A40
19642A40	10-3/8	14-1/2C	AL	3	RH	AVAIL.
43586A40	10-3/8	13C	AL	3	RH	48- 19640A40
86848A 4	10-3/8	13C	AL	3	RH	48- 19640A40
19640A40	10-3/8	13C	AL	3	RH	AVAIL.
43588A 5	10-3/8	13C	SS	3	RH	48- 19644A 5
90780A 4	10-3/8	13C	SS	3	RH	48- 19644A 5
19644A 5	10-3/8	13C	SS	3	RH	AVAIL.
43584A40	10-3/8	11C	AL	3	RH	48- 19638A40
89852A 4	10-3/8	11C	AL	3	RH	48- 19638A40
19638A40	10-3/8	11C	AL	3	RH	AVAIL.
43582A10	10-3/8	9-1/2	AL	3	RH	48- 19636A10
89850A 1	10-3/8	9-1/2	AL	3	RH	48- 19636A10
19636A10	10-3/8	9-1/2C	AL	3	RH	AVAIL.
Chopper						
92764A 4	10-3/8	18C	SS	3	RH	48- 43592A61
92764A 5	10-3/8	18C	SS	3	RH	48- 43592A61
43592A 5	10-3/8	18C	SS	3	RH	48- 43592A61

Mariner 30 (689B)

Without Thru Hub Exhaust
Nut 11-97027M (NLA) Cotter Pin 18-95295 Drive Pin 18-97028M Thrust Hub (Rear) 12-83447M

Part No.	Diameter	Pitch	Material	Blades	Rotation	Status or Supersession
96638M	9-1/2	12-3/8	AL	3	RH	NLA
96639M	9-1/2	11-1/2	AL	3	RH	NLA
96640M	9-1/4	11-1/4	AL	3	RH	NLA
96641M	9	10-3/4	AL	3	RH	NLA
96642M	9-1/4	9	AL	3	RH	NLA
96643M	9-1/4	8	AL	3	RH	NLA

Mariner 40 (676A)

Without Thru Hub Exhaust
Nut 11-14279M Drive Pin 17-83443M Cotter Pin 80652M

Part No.	Diameter	Pitch	Material	Blades	Rotation	Status or Supersession
83311M	11-1/2	13-1/2	AL	3	RH	N.L.A.
96631M	11-1/2	13-1/2	AL	3	RH	AVAIL.
83729M	11-1/2	13	AL	3	RH	N.L.A.
96632M	11-1/2	13	AL	3	RH	AVAIL.
83535M	11-1/2	12	AL	3	RH	
96633M	11-1/2	12	AL	3	RH	AVAIL.
83541M	11-1/2	11	AL	3	RH	
96634M	11-1/2	11	AL	3	RH	AVAIL.
83552M	11-3/4	10	AL	3	RH	N.L.A.
96635M	11-3/4	10	AL	3	RH	AVAIL.
83573M	11-3/4	8-3/4	AL	3	RH	N.L.A.

Part No.	Diameter	Pitch	Material	Blades	Rotation	Status or Supersession
96636M	11-3/4	8-3/4	AL	3	RH	AVAIL.
11904M	11-3/4	7-1/2	AL	3	RH	AVAIL.

Mariner 40-70

40 (676B) (6E9)/48 (670)/50/55 (663)/60 (675)
(6F0)/70 (3CYL.) (BELOW SERIAL #A996142)
With Thru Hub Exhaust
40/48/55/60 - Thrust Hub 73345A1 Cotter Pin 18-82132M Nut 11-859935
50 - Thrust Hub 73345A1 Washer 14-76281 Nut 11-69578Q

Part No.	Diameter	Pitch	Material	Blades	Rotation	Status or Supersession
73146A4	10	19C	AL	3	RH	48- 73146A45
73146A40	10	19C	AL	3	RH	AVAIL.
73144A 4	10	17C	AL	3	RH	48- 73144A45
73144A40	10	17C	AL	3	RH	AVAIL.
73142A 4	10	16C	AL	3	RH	48- 73142A45
73142A40	10	16C	AL	3	RH	AVAIL.
91818A 4	10	16C	SS	3	RH	N.L.A.
91818A 5	10	16C	SS	3	RH	AVAIL.
73140A 4	10-1/8	15C	AL	3	RH	48- 73140A45
73140A40	10-1/8	15C	AL	3	RH	AVAIL.
76232A 4	10-1/8	15C	SS	3	RH	48-855862A46
76232A 5	10-1/8	15C	SS	3	RH	48-855862A46
73138A 4	10-1/4	14C	AL	3	RH	48- 73138A45
73138A40	10-1/4	14C	AL	3	RH	AVAIL.
76230A 4	10-1/4	14C	SS	3	RH	48-855860A46
76230A 5	10-1/4	14C	SS	3	RH	48-855860A46
73136A 4	10-3/8	13C	AL	3	RH	48- 73136A45
73136A40	10-3/8	13C	AL	3	RH	AVAIL.
76228A 4	10-3/8	13C	SS	3	RH	48-855858A46
76228A 5	10-3/8	13C	SS	3	RH	48-855858A46
13295M	11-1/2	13	SS	3	RH	NLA
99957M	11-1/2	13	WORK	3	RH	Export Only
73134A 4	10-5/8	12C	AL	3	RH	48- 73134A45
73134A40	10-5/8	12C	AL	3	RH	AVAIL.
79792A 4	10-5/8	12C	SS	3	RH	48-855856A46
79792A 5	10-5/8	12	SS	3	RH	48-855856A46
855856A 5	12	12	SS	3	RH	AVAIL.
99956M	10-5/8	11	WORK	3	RH	Export Only
79792A 5	11-3/4	12C	SS	3	RH	48-855856A46
96536M	10-7/8	12	AL	3	RH	AVAIL.
85632A 4	10-7/8	11C	AL	3	RH	48- 85632A45
85632A40	12	11C	AL	3	RH	AVAIL.
42740A10	11-1/4	10-1/2C	AL	3	RH	48- 42740A45
73132A 4	11-1/4	10C	AL	3	RH	48- 73132A45
73132A40	12-1/4	10C	AL	3	RH	AVAIL.
87818A 1	12-1/4	9	AL	3	RH	48- 87818A45
87818A10	12-1/4	9	AL	3	RH	48- 87818A45
97868A 1	12-1/4	9	SS	3	RH	48- 97868A46
97868A 5	12-1/4	9	SS	3	RH	48- 97868A46
97868A10	12-1/4	9	SS	3	RH	AVAIL.
87818A10	12-1/4	9	AL Workboat	3	RH	48- 87818A45

Mariner 70-140 I/L / 75/90 (3 Cyl)/100/114 (4 Cyl)

Standard Propeller
Thrust Hub 13191Q01 Tab Washer 14-816629Q Nut 11-52707Q1

Part No.	Diameter	Pitch	Material	Blades	Rotation	Status or Supersession
72758A 4	12-5/8	25C	SS	3	RH	48- 16996A46
72758A 5	12-5/8	25C	SS	3	RH	48- 16996A46
72760A 4	12-3/4	23C	SS	3	RH	48- 16994A46
72760A 5	12-3/4	23C	SS	3	RH	48- 16994A46
77350A 4	12-1/2	23C	AL	3	RH	48- 77350A45
77350A40	12-1/2	23C	AL	3	RH	48- 77350A45
72500A 4	13	21C	SS	3	RH	48- 16992A46
72500A 5	13	21C	SS	3	RH	48- 16992A46
77348A 4	12-3/4	21C	AL	3	RH	48- 77348A45
77348A40	12-3/4	21C	AL	3	RH	48- 77348A45
72762A 4	13-1/4	19C	SS	3	RH	48- 16990A46
72762A 5	13-1/4	19C	SS	3	RH	48- 16990A46
77346A 4	13	19C	AL	3	RH	48- 77346A45
77346A40	13	19C	AL	3	RH	48- 77346A45
16988A 5	13	18C	SS	3	RH	48- 16988A46
72764A 4	13-1/2	17C	SS	3	RH	48- 16988A46
72764A 5	13-1/2	17C	SS	3	RH	48- 16988A46
77344A 4	13-1/4	17C	AL	3	RH	48- 77344A45
77344A40	13-1/4	17C	AL	3	RH	48- 77344A45
77342A 4	13-3/4	15C	AL	3	RH	48- 77342A45
77342A40	13-3/4	15C	AL	3	RH	48- 77342A45
87444A 4	13-3/4	15C	SS	3	RH	48- 17314A46
87444A 5	13-3/4	15C	SS	3	RH	48- 17314A46
77340A 4	14	13C	AL	3	RH	48- 77340A45
77340A40	14	13C	AL	3	RH	48- 77340A45
12606A 5	14	12C	SS	3	RH	48- 17312A46
17312A 5	14	12C	SS	3	RH	48- 17312A46
77338A 4	14	11C	AL	3	RH	48- 77338A45
77338A40	14	11C	AL	3	RH	48- 77338A45
12604A 5	14	10C	SS	3	RH	48- 17310A46
17310A 5	14	10C	SS	3	RH	48- 17310A46

Mariner V-6 Models-Chopper (Gearcase 4-3/4 Inch)

Thrust Hub - 13191Q01 Tab Washer 14-816629Q Nut 11-52707Q1

Part No.	Diameter	Pitch	Material	Blades	Rotation	Status or Supersession
98246A 4	14-1/4	30C	SS	3	RH	NLA
98246A 5	14-1/4	30C	SS	3	RH	NLA
89860A 4	14-1/2	28C	SS	3	RH	48- 13372A62
89860A 5	14-1/2	28C	SS	3	RH	48- 13372A62
13373A 5	14-1/2	28C	SS	3	LH	48- 13373A62
13372A 5	14-1/2	28C	SS	3	RH	48- 13372A62
98245A 1	14-1/2	28	SS	3	LH	48- 13373A62
89858A 4	14-1/2	26C	SS	3	RH	48- 13370A62
93593A 1	14-1/2	26	SS	3	LH	48- 13371A62
13371A 5	14-1/2	26C	SS	3	LH	48- 13371A62
13370A 5	14-1/2	26C	SS	3	RH	48- 13370A62
89858A 5	14-1/2	26C	SS	3	RH	48- 13370A62
77320A 4	14-1/2	24C	SS	3	RH	48- 13368A62
93591A 1	14-1/2	24C	SS	3	LH	48- 13369A62
77320A 5	14-1/2	24C	SS	3	RH	48- 13368A62

Part No.	Diameter	Pitch	Material	Blades	Rotation	Status or Supersession
13369A 5	14-1/2	24C	SS	3	LH	48- 13369A62
13368A 5	14-1/2	24C	SS	3	RH	48- 13368A62
89856A 4	14-1/2	22C	SS	3	RH	48- 13366A62
89856A 5	14-1/2	22C	SS	3	RH	48- 13366A62
13366A 5	14-1/2	22C	SS	3	RH	48- 13366A62

Mariner V-6 Models-Laser (Gearcase 4-3/4 Inch)

Thrust Hub 12-835467Q01 Tab Washer 14-816629Q Washer 12-31211Q03 Nut 11-52707Q1

Part No.	Diameter	Pitch	Material	Blades	Rotation	Status or Supersession
11078A40	14-1/8	25C	SS	3	RH	48- 16550A46
11074A40	14-1/4	23C	SS	3	RH	
11070A40	14-3/8	21C	SS	3	RH	48-825862A47

Mariner V-6 Models-Trophy (Gearcase 4-3/4 Inch)

Thrust Hub 12-835467Q01 Tab Washer 14-816629Q Nut 11-52707Q1

Part No.	Diameter	Pitch	Material	Blades	Rotation	Status or Supersession
825904A41	14	21	SS	4	RH	NLA
825908A40	14	23	SS	4	RH	NLA
825910A40	14	24	SS	4	RH	NLA
825912A40	14	25	SS	4	RH	NLA
825914A40	14	26	SS	4	RH	NLA
825908A41	14	23	SS	4	RH	
825910A41	14	24	SS	4	RH	NLA
825912A41	14	25	SS	4	RH	NLA
825914A41	14	26	SS	4	RH	NLA

FORCE OUTBOARDS

Force 3

Cotter Pin 18-95295 Shear Pin 17-815111 (AL Prop), 17-815111--1 (PL Prop)

Part No.	Diameter	Pitch	Material	Blades	Rotation	Status or Supersession
48-815083A01	7-3/8	6	PL	3	RH	AVAIL.
48-815084A01	7-3/8	6	AL	3	RH	AVAIL.
48-815084A02	7-3/8	6	AL w/rubber hub	3	RH	AVAIL.

Force 4/5

Pin FA324101 Nut 11-817752A1 Cotter Pin 18-45882

Part No.	Diameter	Pitch	Material	Blades	Rotation	Status or Supersession
FP332	7-1/4	6-1/2	NYLON	3	RH	48-820110A20
N.L.A.	7	6-1/4	AL	2	RH	AVAIL.
FP712	7-1/4	6-1/2	NYLON	3	RH	48-820110A20
820110A20	7-1/4	6-1/2	NYLON	3	RH	AVAIL.
FP652	8	5	AL	3	RH	NLA
FP75	8	5	AL	2	RH	NLA
FP488	7-1/4	5-1/2	AL	3	RH	NLA

Force 7.5

Pin FA324101 Nut 11-817752A1 Cotter Pin 18-45882

Part No.	Diameter	Pitch	Material	Blades	Rotation	Status or Supersession
FP477	8	9-1/4	NYLON	3	RH	AVAIL.
48-FP430	8	8-1/4	NYLON	3	RH	AVAIL.
FP75	8	5	AL	2	RH	NLA
FP73	8	3-1/2	AL	2	RH	NLA

Force 9.9/15

Pin FA324101 Nut 11-817752A1 Cotter Pin 18-45882

Part No.	Diameter	Pitch	Material	Blades	Rotation	Status or Supersession
FP715	8-3/4	6	AL	3	RH	AVAIL.
FP6477	8	9-1/4	NYLON	3	RH	AVAIL.
FP472	9	9	AL	3	RH	FP6477
FP 70	8-1/4	8-3/4	AL	2	RH	NLA
48-FP6430	8	8-1/4	NYLON	3	RH	AVAIL.
FP286-__	8-1/4	8-1/4	AL	2	RH	48-FP6430
FP395	8-1/4	6	AL	3	RH	NLA
FP396	8-1/4	4-1/2	AL	3	RH	NLA

Force 20-60 Horsepower

20-25 HP 1979-1981
30 HP 1966-1982
35 HP 1966-1991
40 HP 1992-1994
45 HP 1966-1984
50 HP 1982-1994
55-60 HP 1966-1984
14 Tooth Spline & Pin Drive
Nut FA94094-2 Pin FK247 Cotter Pin 18-89961

Propeller Size	Material	Blades	Style	Quicksilver P/N	Hub System
10-3/8 X 12.5	AL	3	Black Diamond	N.L.A.	Rubber Bushing
10-3/8 X 11.5	AL	3	Black Diamond	N.L.A.	Rubber Bushing
10-3/8 X 10	AL	3	Black Diamond	N.L.A.	Rubber Bushing

Force 60

NLA = FP497, FP499
Hub 22-F522099 (NLA) Flat Washer F531299 Washer 12-F1866 Nut 11-F7048
Cotter Pin 826374 Prop Nut F522094-1 (NLA)

Part No.	Diameter	Pitch	Material	Blades	Rotation	Status or Supersession
FPS495	10	15	AL	3	RH	NLA
FP496	10	14c	SS	3	RH	NLA
FPS494	10	14	AL	3	RH	NLA
FPS486	10	13c	AL	3	RH	NLA
FPS493	10	13	AL	3	RH	NLA
FPS522	10	12	AL	3	RH	NLA

Force 70

Thrust Hub 73345A1 Tab Washer 14-76281 Nut 11-69578Q1

Part No.	Diameter	Pitch	Material	Blades	Rotation	Status or Supersession
FPM735	10	19	AL	3	RH	48- 73146A45
73146A40	10	19	AL	3	RH	AVAIL.
FPM736	10	17	AL	3	RH	48- 73144A45
73144A40	10	17	AL	3	RH	AVAIL.
FPM737	10	16	AL	3	RH	48- 73142A45

Part No.	Diameter	Pitch	Material	Blades	Rotation	Status or Supersession
73142A40	10	16	AL	3	RH	AVAIL.
FPM750	10	16	SS	3	RH	N.L.A.
91818A 5	10	16	SS	3	RH	AVAIL.
FPM738	10-1/8	15	AL	3	RH	48- 73140A45
73140A40	10-1/8	15	AL	3	RH	AVAIL.
FPM739	10-3/8	15	AL	3	RH	48-816706A45
816706A40	10-3/8	15	AL	3	RH	AVAIL.
FPM751	10-1/8	15	SS	3	RH	48-855862A46
76232A 5	10-1/8	15	SS	3	RH	48-855862A46
FPM752	10-1/4	14	SS	3	RH	48-855860A46
76230A 5	10-1/4	14	SS	3	RH	48-855860A46
FPM740	10-1/2	13	AL	3	RH	48-816704A45
816704A40	10-1/2	13	AL	3	RH	AVAIL.
FPM753	10-3/8	13	SS	3	RH	48-855858A46
76228A 5	10-3/8	13	SS	3	RH	48-855858A46
FPM741	10-3/4	12	AL	3	RH	48-816702A45
816702A40	10-3/4	12	AL	3	RH	AVAIL.
FPM742	11-7/8	12	AL	3	RH	48- 85632A45
85632A40	10-7/8	11	AL	3	RH	AVAIL.
FPM754	10-5/8	12	SS	3	RH	48-855856A46
79792A 5	10-5/8	12	SS	3	RH	48-855856A46
FPM743	12	10-1/2	AL	3	RH	48- 42740A45
42740A10	12	10-1/2	AL	3	RH	48- 42740A45
FPM756	11-1/4	10	AL	3	RH	48- 73132A45
73132A40	11-1/4	10	AL	3	RH	AVAIL.
FPM755	12-1/4	9	SS	3	RH	48- 97868A46
97868A10	12-1/4	9	SS	3	RH	AVAIL.
FPM757	12-1/4	9	AL	3	RH	48- 87818A45
87818A10	12-1/4	9	AL	3	RH	48- 87818A45
FPM746	12-1/2	8	AL	3	RH	48- 42738A45
42738A10	12-1/2	8	AL	3	RH	48- 42738A45

Force 85-150 and All L-Drives Pre 1995 No Thru or Thru Hub Exhaust

85, 125 HP 1988-1989
90, 120 HP 1990-1994
90-120 HP L Drive 1989-1991
150 HP 1989-1994
150 HP L Drive 1991
15 Tooth Spline

Propeller Size	Material	Blades	Style	Quicksliver P/N	Hub System
13 X 19 RH	AL	3	Black Diamond	48-FP686-4	Rubber Bushing
13-1/2 X 17 RH	AL	3	Black Diamond	48-FP685-3	Rubber Bushing
13-1/2 X 15 RH Cupped	AL	3	Black Diamond	48-FP669-3	Rubber Bushing
13-1/2 X 15 RH	AL	3	Black Diamond	48-FP692-3	Rubber Bushing
14 X 13 RH	AL	3	Black Diamond	48-FP743-2	Rubber Bushing

CHRYSLER OUTBOARDS

Chrysler Outboard 1983 and Older

NLA = FP50, FP77, FP102, FP324, FP346, FP381, FP391, FP392, FP393, FP394, FP410, FP410, FP446, FP461, FP471, FP481, FP497, FP499, FP527, FP530, FP539

Part No.	Diameter	Pitch	Material	Blades	Rotation	Status or Supersession	Horsepower	Model Year
FP19	7-1/2	4-1/2	AL (PIN)	2	RH	N.L.A.	3.5*, 3.6*(1)	69-76
FP332	7-1/2	6-1/2	PL	3	RH	48-820110A20	4.0*, 3.5*(1)	77 AND NEWER
FP73	8	3-1/2	AL	2	RH	N.L.A.	4.4, 5.0, 6.0, 4.5, 8.0	68-78
FP521	7-1/4	5-1/2	AL (PIN)	3	RH	N.L.A.	4.0*, L.L.(1)	76-78
FP430	8	8-1/4	PL	3	RH	AVAIL.	6.0*, 8.0, 7.5(1)	78-81
N.L.A.	7	6-1/4	AL	2	RH	AVAIL.	3.5, 6.0, 8.0	76-79
FP477	8	9-1/4	PL	3	RH	AVAIL.	6.0, 7.5, 8.0	78 AND NEWER
FP488	7-1/4	5-1/2	AL	3	RH	N.L.A.	3.5, 6.0, 8.0, 4.0, L.L.*(1)	76-79
FP75	8	5	AL	2	RH	N.L.A.	3.5, 6.6, 7.0, 7.5, 8.0	68-80
FP6430	8	8-1/2	PL	3	RH	AVAIL.	9.9, 10, 12.9, 15	68 AND NEWER
FP70	8-1/4	8-3/4	AL	2	RH	N.L.A.	9.9, 10, 12.9, 15	68 AND NEWER
FP396	8-1/4	4-1/2	AL	3	RH	N.L.A.	9.9, 10, 12.9, 15	68 AND NEWER
FP395	8-1/4	6	AL	3	RH	N.L.A.	9.9, 10, 12.9, 15	68 AND NEWER
FP472	8	9	AL	3	RH	FP6477	9.9, 10, 12.9, 15	68 AND NEWER
FP273	10-3/8	13-1/2	AL	3	RH	819334A40	30*, 35, 45, 55+, 60+	66 AND NEWER
819334A40	10-3/8	13-1/2	AL	3	RH	N.L.A.	30*, 35, 45, 55+, 60+	66 AND NEWER
FP293	10-3/8	12-1/2	AL	3	RH	N.L.A.	30, 35, 45*, 55*+, 60+	66 AND NEWER
FP287	10-3/8	11-1/2	AL	3	RH	N.L.A.	30, 35*, 45, 55+, 60+	66 AND NEWER
FP278	10-3/8	10	AL	3	RH	N.L.A.	30, 35, 45, 55+, 60+ Sailors 10, 250, 280(2)	66 AND NEWER

(1) Standard Replacement Propeller

(2) Two-piece gear case

MERCRUSIER STERNDRIVES

MerCruiser 60

NLA = 48-38396A1, 48-38396A4, 48-38394A1, 48-38394A4, 48-38086A4, 48-38090A4, 48-37314A1, 48-37314A4,
Thrust Hub 38859A1 Washer 12-32007 Nut 11-69578Q1

Part No.	Diameter	Pitch	Material	Blades	Rotation	Status or Supersession
38090A1	10-3/4	13	AL	3	RH	N.L.A.
38094A1	10-3/4	12	AL	3	RH	N.L.A.
38094A4	10-3/4	12C	AL	3	RH	N.L.A.
38098A1	10-3/4	11	AL	3	RH	N.L.A.
38098A4	10-3/4	11C	AL	3	RH	N.L.A.
33774A1	10-3/4	10	AL	3	RH	AVAIL.
33774A4	10-3/4	10C	AL	3	RH	N.L.A.
32194A1	10-3/4	9	AL	3	RH	N.L.A.
32194A4	10-3/4	9C	AL	3	RH	N.L.A.

MerCruiser 80/90 & MerCruiser I

MerCruiser I with 4 Inch OD outer prop hub
NLA = 48-31448A3, 48-31448A4, 48-31450A3, 48-31450A4, 48-32744A3, 48-32744A4, 48-31460A3, 48-31460A4, 48-30394A3, 48-30394A4
48-30398A3, 48-30398A4, 48-33242A3, 48-33242A4, 48-30400A3, 48-30400A4
Thrust Hub 3

Part No.	Diameter	Pitch	Material	Blades	Rotation	Status or Supersession
52012A 3	13	25	AL	3	RH	48- 77350A45
52012A 4	13	25C	AL	3	RH	48- 16996A46
72758A 4	12-5/8	25C	SS	3	RH	48- 16996A46
72758A 5	12-5/8	25C	SS	3	RH	48- 16996A46
32386A 3	13-3/4	23	AL	2	RH	48- 77348A45
32386A 4	13-3/4	23C	AL	2	RH	48- 77350A45
52008A 3	13	23	AL	3	RH	48- 77348A45
52008A 4	13	23C	AL	3	RH	48- 77350A45
72760A 4	12-3/4	23C	SS	3	RH	48- 16994A46
72760A 5	12-3/4	23C	SS	3	RH	48- 16994A46
77350A 4	12-1/2	23C	AL	3	RH	48- 77350A45
77350A40	12-1/2	23C	AL	3	RH	48- 77350A45
31454A 3	13-3/4	21	AL	2	RH	48- 77346A45
31454A 4	13-3/4	21C	AL	2	RH	48- 77348A45
32746A 3	13	21	AL	3	RH	48- 77346A45
32746A 4	13	21C	AL	3	RH	48- 77348A45
72500A 4	13	21C	SS	3	RH	48- 16992A46
72500A 5	13	21C	SS	3	RH	48- 16992A46
77348A 4	12-3/4	21C	AL	3	RH	48- 77348A45
77348A40	12-3/4	21C	AL	3	RH	48- 77348A45
32388A 3	13-3/4	19	AL	2	RH	N.L.A.
32388A 4	13-3/4	19C	AL	2		

MerCruiser I (Standard Propeller)

With 4-1/2 Inch OD outer prop hub
NLA = 48-36028A4, 48-36032A1, 48-36032A4, 48-66139A4, 48-66448A4, 48-79582A4, 48-36030A1, 48-36030A4, 48-73982A4, 48-36022A1,
48-36024A1, 48-36024A4
1982 and Before - Thrust Hub 56292Q04 Tab Washer 14-816629Q

Part No.	Diameter	Pitch	Material	Blades	Rotation	Status or Supersession
36028A 1	14-1/2	27	AL	3	RH	N.L.A.
36008A 1	14-1/2	25	AL	3	RH	N.L.A.
36008A 4	14-1/2	25C	AL	3	RH	N.L.A.
65480A 1	14-1/2	25	AL	3	RH	N.L.A.
65480A 4	14-1/2	25C	AL	3	RH	N.L.A.
75784A 4	13-1/4	25C	AL	3	RH	N.L.A.
77402A 4	13-1/2	25C	SS	3	RH	48- 16550A46
16550A46	13-1/2	25C	SS	3	RH	AVAIL.
78126A 4	13-3/8	25C	AL	3	RH	N.L.A.
78126A40	13-3/8	25C	AL	3	RH	N.L.A.
79580A 4	14-1/2	25C	AL	3	RH	N.L.A.
79796A 4	13-3/8	25C	SS	3	RH	48- 16550A46
16550A36	13-3/8	25C	SS	3	RH	AVAIL.
79796A 5	13-3/8	25C	SS	3	RH	48- 16550A46
16550A36	13-3/8	25C	SS	3	RH	AVAIL.
88446A 4	13-1/2	25C	SS	3	RH	48- 16550A46
16550A36	13-1/2	25C	SS	3	RH	AVAIL.
16322A 5	13-3/8	25C	SS	3	RH	48- 16550A46
16550A36	13-3/8	25C	SS	3	RH	AVAIL.

Part No.	Diameter	Pitch	Material	Blades	Rotation	Status or Supersession
36010A 1	14-1/2	23	AL	3	RH	48-832834A45
36010A 4	14-1/2	23C	AL	3	RH	48-832834A45
58426A 1	15	23	AL	3	RH	48-832834A45
58426A 4	15	23C	AL	3	RH	48-832834A45
67874A 4	15	23C	AL	3	RH	48-832834A45
75058A 4	13-1/2	23C	SS	3	RH	48- 16320A46
75160A 4	13-1/2	23C	AL	3	RH	48-832834A45
75724A 4	13-1/2	23C	SS	3	RH	48- 16320A46
75724A 5	13-1/2	23C	SS	3	RH	48- 16320A46
16321A 5	13-1/2	23C	SS	3	LH	48- 16321A46
16320A 5	13-1/2	23C	SS	3	RH	48- 16320A46
78124A 4	13-1/2	23C	AL	3	RH	48-832834A45
78124A40	13-1/2	23C	AL	3	RH	48-832834A45
79578A 4	15	23C	AL	3	RH	48-832834A45
88444A 4	13-1/2	23C	SS	3	RH	48- 16320A46
36012A 1	15	21	AL	3	RH	48-832832A45
36012A 4	15	21C	AL	3	RH	48-832832A45
49634A 1	15	21	AL	3	RH	48-832832A45
49634A 4	15	21C	AL	3	RH	48-832832A45
58424A 1	15-1/4	21	AL	3	RH	48-832832A45
58424A 4	15-1/4	21C	AL	3	RH	48-832832A45
65992A 1	15-1/4	21	AL	3	RH	48-832832A45
65992A 4	15-1/4	21C	AL	3	RH	48-832832A45
73982A 5	13-3/4	21C	SS	3	RH	48- 16318A46
74268A 4	13-3/4	21C	SS	3	RH	48- 16318A46
16319A 5	13-3/4	21C	SS	3	LH	
16318A 5	13-3/4	21C	SS	3	RH	48- 16318A46
74876A 4	13-3/4	21C	AL	3	RH	48-832832A45
74888A 4	15-1/4	21C	AL	3	RH	48-832832A45
78122A 4	13-3/4	21C	AL	3	RH	48-832832A45
78122A40	13-3/4	21C	AL	3	RH	48-832832A45
79576A 4	15-1/4	21C	AL	3	RH	48-832832A45
36014A 1	15-1/2	19	AL	3	RH	48-832830A45
832830A45	15-1/2	19	AL	3	RH	AVAIL.
36014A 4	15-1/2	19C	AL	3	RH	48- 11324A45
58422A 1	15-1/2	19	AL	3	RH	48-832830A45
832830A45	15-1/2	19	AL	3	RH	AVAIL.
58422A 4	15-1/2	19C	AL	3	RH	48- 11324A45
66432A 1	15-1/2	19	AL	3	RH	48-832830A45
832830A45	15-1/2	19	AL	3	RH	AVAIL.
66432A 4	15-1/2	19C	AL	3	RH	48- 11324A45
73980A 4	14	19C	SS	3	RH	48- 16316A46
73980A 5	14	19C	SS	3	RH	48- 16316A46
74266A 4	14	19C	SS	3	RH	48- 16316A46
74874A 4	14	19C	AL	3	RH	48-832830A45
74886A 4	15-1/2	19C	AL	3	RH	48- 11324A45
78120A 4	14	19C	AL	3	RH	48-832830A45
78120A40	14	19C	AL	3	RH	48-832830A45
79574A 4	15-1/2	19C	AL	3	RH	48- 11324A45
88440A 4	14	19C	SS	3	RH	48- 16316A46
16317A 5	14	19C	SS	3	LH	48- 16317A46
16317A46	14	19C	SS	3	LH	AVAIL.
16316A 5	14	19C	SS	3	RH	48- 16316A46
11324A40	15-1/2	18C	AL	3	RH	48- 11324A45

Part No.	Diameter	Pitch	Material	Blades	Rotation	Status or Supersession
36016A 1	15-3/4	17	AL	3	RH	48- 16440A45
36016A 4	15-3/4	17C	AL	3	RH	48- 16440A45
66450A 4	15-3/4	17C	AL	3	RH	48- 16440A45
74872A 4	14-1/4	17C	AL	3	RH	48-832828A45
78118A 4	14-1/2	17C	AL	3	RH	48-832828A45
78118A40	14-1/2	17C	AL	3	RH	48-832828A45
79572A 4	15-3/4	17C	AL	3	RH	48- 16440A45
79794A 4	14-1/2	17C	SS	3	RH	48- 16314A46
79794A 5	14-1/2	17C	SS	3	RH	48- 16314A46
79830A 4	14-1/2	17C	SS	3	RH	48- 16314A46
16315A 5	14-1/2	17C	SS	3	LH	48- 16315A46
16314A 5	14-1/2	17C	SS	3	RH	48- 16314A46
88438A 4	14-1/2	17C	SS	3	RH	48- 16314A46
11322A40	15-3/4	16C	AL	3	RH	48- 16440A45
16440A40	16	16C	AL	3	RH	48- 16440A45
36018A 1	16	15	AL	3	RH	48- 78116A45
36018A 4	16	15C	AL	3	RH	48- 16438A45
66452A 4	16	15C	AL	3	RH	48- 16438A45
75760A 4	14-1/2	15C	AL	3	RH	48- 78116A45
78116A 4	16	15C	AL	3	RH	48- 78116A45
78116A40	16	15C	AL	3	RH	48- 78116A45
79570A 4	16	15C	AL	3	RH	48- 16438A45
93272A 4	14-1/2	15C	SS	3	RH	48- 16312A46
93272A 5	14-1/2	15C	SS	3	RH	48- 16312A46
16312A 5	14-1/2	15C	SS	3	RH	48- 16312A46
11320A40	16	14C	AL	3	RH	48- 16438A45
16438A40	16	14C	AL	3	RH	48- 16438A45
36020A 1	16	13	AL	3	RH	48- 78114A45
36020A 4	16	13C	AL	3	RH	48- 78114A45
75138A 4	16	13C	AL	3	RH	48- 78114A45
78114A 4	16	13C	AL	3	RH	48- 78114A45
78114A40	16	13C	AL	3	RH	48- 78114A45
79568A 4	16	13C	AL	3	RH	48- 78114A45
16436A40	16	12C	AL	3	RH	48- 16436A45
36022A 4	16	11C	AL	3	RH	48- 78112A45
78112A 4	16	11C	AL	3	RH	48- 78112A45
78112A40	16	11C	AL	3	RH	48- 78112A45
16312A 4	14-1/2	15C	SS	3	RH	48- 16312A46
16314A 4	14-1/2	17C	SS	3	RH	48- 16314A46
16315A 4	14-1/2	17C	SS	3	LH	48- 16315A46
16316A 4	14	19C	SS	3	RH	48- 16316A46
16318A 4	13-3/4	21C	SS	3	RH	48- 16318A46
16319A 4	13-3/4	21C	SS	3	LH	
16320A 4	13-1/2	23C	SS	3	RH	48- 16320A46
16321A 4	13-1/2	23C	SS	3	LH	48- 16321A46
16322A 4	13-3/8	25C	SS	3	RH	48- 16550A46
16550A46	13-3/8	25C	SS	3	RH	AVAIL.

MerCruiser I (Cleaver)

With 4-1/2 Inch OD outer prop hub
NLA = 48-77096A4, 48-88452A4, 48-89806A4, 48-89806A5, 48-77094A4, 48-88450A4, 48-89804A4, 48-89804A5, 48-77092A4, 48-88448A4
Thrust Hub 92950 Tab Washer 14-816629Q Washer 12-31211A3 Nut 11-52707Q1

Part No.	Diameter	Pitch	Material	Blades	Rotation	Status or Supersession
89802A 4	14-3/4	21C	SS	3	RH	N.L.A.
89802A 5	14-3/4	21C	SS	3	RH	N.L.A.
89266A 4	15	19C	SS	3	RH	N.L.A.
89800A 4	15	19C	SS	3	RH	N.L.A.
89800A 5	15	19C	SS	3	RH	N.L.A.

Bravo One - Mirage

Solid Hub
Mirage Plus 370 Hp & Below
Thrust Hub 12-835467 1 Tab Washer 14-816629 Washer Splined 12-31211A2 Nut 11-52707A1
Solid Hub Mirage - 370 Hp & Up
Thrust Hub 14359 Splined Washer (FWD) 12-39701 Flat Washer (Rear) 12-39698

Part No.	Diameter	Pitch	Material	Blades	Rotation	Status or Supersession
821720A 5	14-3/4	29C	SS	3	RH	48-821720A56
821719A 5	14-3/4	29C	SS	3	LH	48-821719A56
19836A 5	14-3/8	27C	SS	3	RH	N.L.A.
18280A56	14-3/8	27C	SS	3	RH	N.L.A.
19835A 5	14-3/8	27C	SS	3	LH	48- 18281A56
13248A 5	14-1/2	25C	SS	3	RH	48- 13706A56
13247A 5	14-1/2	25C	SS	3	LH	
13246A 5	14-5/8	23C	SS	3	RH	
13245A 5	14-5/8	23C	SS	3	LH	48- 13705A56
13244A 5	14-3/4	21C	SS	3	RH	48- 13702A56
13243A 5	14-3/4	21C	SS	3	LH	48- 13703A56
13703A56	14-3/4	21C	SS	3	LH	AVAIL.
13242A 5	15-1/4	19C	SS	3	RH	48- 13700A56
13241A 5	15-1/4	19C	SS	3	LH	48- 13701A56
19839A 5	15-1/2	17C	SS	3	LH	
19835A 5	15-1/2	17C	SS	3	RH	N.L.A.
19834A50	15-1/2	17	SS	3	RH	N.L.A.
18278A56	15-1/2	17	SS	3	RH	N.L.A.
19835A50	14-3/8	27	SS	3	LH	18281A56
19836A50	14-3/8	27	SS	3	RH	18280A56
19839A50	15-1/2	17	SS	3	LH	
13241A50	15-1/4	19	SS	3	LH	48- 13701A56
13242A50	15-1/4	19	SS	3	RH	48- 13700A56
13243A50	14-3/4	21	SS	3	LH	48- 13703A56
13244A50	14-3/4	21	SS	3	RH	48- 13702A56
13245A50	14-5/8	23	SS	3	LH	48- 13705A56
13246A50	14-5/8	23	SS	3	RH	
13247A50	14-1/2	25	SS	3	LH	
13248A50	14-1/2	25	SS	3	RH	48- 13706A56
821719A50	14-3/4	29	SS	3	LH	48-821719A56
821720A50	14-3/4	29	SS	3	RH	48-821720A56

Bravo One - Cleaver

Rubber Hub
NLA = 48-89799A5, 48-89801A5, 48-89803A5, 48-89804A5, 48-89805A5, 48-89806A5
Thrust Hub 92950 Tab Washer 14-816629Q Washer 12-31211A3 Nut 11-52707Q1

Part No.	Diameter	Pitch	Material	Blades	Rotation	Status or Supersession
89805A4	14-1/4	25C	SS	3	LH	N.L.A.
89806A4	14-1/4	25C	SS	3	RH	N.L.A.
89803A4	14-1/2	23C	SS	3	LH	N.L.A.
89804A4	14-1/2	23C	SS	3	RH	N.L.A.
89801A4	14-3/4	21C	SS	3	LH	N.L.A.
89802A4	14-3/4	21C	SS	3	RH	N.L.A.
89802A5	14-3/4	21C	SS	3	RH	N.L.A.
89799A4	15	19C	SS	3	LH	N.L.A.
89800A4	15	19C	SS	3	RH	N.L.A.
89800A5	15	19C	SS	3	RH	N.L.A.

Bravo Two

NLA = 48-18607A42, 48-18609A42
Thrust Washer 55074T Tab Washer 14-34817 Washer 12-55073A2 Nut 11-826711 27

Part No.	Diameter	Pitch	Material	Blades	Rotation	Status or Supersession
	16-1/4	25C	AL	3	LH	AVAIL.
	17-1/4	25C	AL	3	LH	AVAIL.
	16-1/4	25C	AL	3	RH	AVAIL.
	17-1/4	25C	AL	3	RH	AVAIL.
	16-1/2	23C	AL	3	LH	AVAIL.
48- 18619A40	17-1/2	23C	AL	3	LH	AVAIL.
	16-1/2	23C	AL	3	RH	AVAIL.
48- 18618A40	17-1/2	23C	AL	3	RH	AVAIL.
	16-3/4	21C	AL	3	LH	AVAIL.
48- 18617A40	17-3/4	21C	AL	3	LH	AVAIL.
	16-3/4	21C	AL	3	RH	AVAIL.
48- 18616A40	17-3/4	21C	AL	3	RH	AVAIL.
48- 77900A40	19-1/2	21C	AL	3	RH	AVAIL.
	14-1/4	19C	AL	3	LH	AVAIL.
48- 18615A40	18-1/4	19C	AL	3	LH	AVAIL.
	17-1/4	19C	AL	3	RH	AVAIL.
48- 77898A40	19-3/4	19C	AL	3	RH	AVAIL.
48- 18614A40	18-1/4	19C	AL	3	RH	AVAIL.
	17-3/4	17C	AL	3	LH	AVAIL.
	18-3/4	17C	AL	3	LH	AVAIL.
	18-3/4	17C	AL	3	RH	AVAIL.
	18-3/4	17C	AL	3	RH	AVAIL.
	18-1/4	15C	AL	3	LH	AVAIL.
	19-1/4	15C	AL	3	LH	AVAIL.
	18-1/4	15C	AL	3	RH	AVAIL.
	19-1/4	15C	AL	3	RH	AVAIL.
	19-1/2	13C	AL	3	RH	AVAIL.
	20	11C	AL	3	RH	AVAIL.

Bravo Three - Gas & Diesel

Prop Wrench 91-805457T1 Rear Prop Nut 862907 Forward Prop Nut 11-859131
Rear Thrust Hub 805101T Forward Thrust Hub 805100

Part No.	Diameter	Pitch	Material	Blades	Rotation	Status or Supersession
823670A 5	13-3/4	28	SS	3	RH	48-823670A60
823669A 5	15	28	SS	3	LH	48-823669A60
823668A 5	14	26	SS	3	RH	
823667A 5	15-1/4	26	SS	3	LH	48-823667A60
823666A 5	14-1/4	24	SS	3	RH	48-823666A60
823665A 5	15-1/2	24	SS	3	LH	
823664A 5	14-1/4	22	SS	3	RH	48-823664A60
823663A 5	15-3/4	22	SS	3	LH	48-823663A60
823662A 5	14-2/5	20	SS	3	RH	48-823662A60
823661A 5	16	20	SS	3	LH	48-823661A60
823670A 6	13-3/4	28	SS	3	RH	48-823670A60
823669A 6	15	28	SS	3	LH	48-823669A60
823668A 6	14	26	SS	3	RH	
823667A 6	15-1/4	26	SS	3	LH	48-823667A60
823666A 6	14-1/4	24	SS	3	RH	48-823666A60
823665A 6	15-1/2	24	SS	3	LH	
823664A 6	14-1/4	22	SS	3	RH	48-823664A60
823663A 6	14-1/4	22	SS	3	LH	48-823663A60
823662A 6	14-3/8	20	SS	3	RH	48-823662A60
823661A 6	16	20	SS	3	LH	48-823661A60

Pre 2008 3 blade Front/Rear Mercury MerCruiser Bravo Three

3 blade front 3 blade rear propellers
For listing of New style 4 blade front 3 blade rear propellers Bravo Three in Mercury Propeller Application Charts section of guide
Mixing of old style and new style props is not recommended for best performance

All Engines
Bravo Three Propeller Hardware (not included with propellers):
Forward Thrust Washer 805101T
Aft Thrust Washer 805100
Forward Prop Nut 859131
Aft Prop Nut 862907
Bravo Three Inner Prop Nut Wrench 805457T 1

Pitch	Material	Finish	Blades (Front & Rear)	LH Rotation Front Prop	RH Rotation Rear Prop	Model
30 Cup	SS	Matte	3 & 3	48-831867L	48-831868L	Bravo Three
30	SS	Matte	3 & 3	48-831867A60	48-831868A60	Bravo Three
28 Cup	SS	Matte	3 & 3	48-823669L	48-823670L	Bravo Three
28	SS	Matte	3 & 3	48-823669A60	48-823670A60	Bravo Three
26 Cup	SS	Matte	3 & 3	48-823667L		Bravo Three
26	SS	Matte	3 & 3	48-823667A60		Bravo Three
24 Cup	SS	Matte	3 & 3	48-823665L		Bravo Three
24	SS	Matte	3& 3		48-823666A60	Bravo Three
22 Cup	SS	Matte	3 & 3		48-823664L	Bravo Three
22	SS	Matte	3 & 3	48-823663A60	48-823664A60	Bravo Three
20 Cup	SS	Matte	3 & 3	48-823661L	48-823662L	Bravo Three
20	SS	Matte	3 & 3	48-823661A60	48-823662A60	Bravo Three

MerCruiser 215E/215H/All II-TR & TR

NLA = 48-57270A1, 48-57271A1, 48-54733A1, 48-54733A4, 48-57268A1, 48-57269A1, 48-54731A1, 48-54731A4, 48-57266A1, 48-57267A1, 48-54719A1, 48-54720A1, 48-54717A1, 48-54718A1
Thrust Washer 55074T Tab Washer 14-34817 Washer 12-55073 (NLA) Nu

Part No.	Diameter	Pitch	Material	Blades	Rotation	Status or Supersession
54726A 4	18	23C	AL	3	LH	48- 18619A40
57264A 1	19-1/4	23	AL	3	RH	48- 18618A40
57265A 1	19-1/4	23	AL	3	LH	48- 18619A40
77902A 1	19-1/4	23	AL	3	RH	48- 18618A40
77902A10	19-1/4	23	AL	3	RH	48- 18618A40
18618A40	16-1/2	23C	AL	3	RH	AVAIL.
77903A 1	19-1/4	23	AL	3	LH	48- 18619A40
77903A10	19-1/4	23	AL	3	LH	48- 18619A40
18619A40	16-1/2	23C	AL	3	LH	AVAIL.
54727A 1	18-1/2	21	AL	3	LH	48- 18617A40
54727A 4	18-1/2	21C	AL	3	LH	48- 18617A40
57262A 1	19-1/2	21	AL	3	RH	48- 18616A40
57263A 1	19-1/2	21	AL	3	LH	48- 18617A40
69262A 1	19-1/2	21	AL	3	RH	48- 18616A40
77900A 1	19-1/2	21	AL	3	RH	48- 18616A40
77900A10	19-1/2	21	AL	3	RH	48- 18616A40
18616A40	16-3/4	21C	AL	3	RH	AVAIL.
77901A 1	19-1/2	21	AL	3	LH	48- 18617A40
77901A10	19-1/2	21	AL	3	LH	48- 18617A40
18617A40	17-3/4	21C	AL	3	LH	AVAIL.
54725A 1	19	19	AL	3	LH	48- 18615A40
54726A 1	19	19	AL	3	RH	48- 18614A40
63305A 1	19-3/4	19	AL	3	LH	48- 18615A40
63306A 1	19-3/4	19	AL	3	RH	48- 18614A40
69260A 1	19-3/4	19	AL	3	RH	48- 18614A40
77898A 1	19-3/4	19	AL	3	RH	48- 18614A40
77898A10	19-3/4	19	AL	3	RH	48- 18614A40
77898A40	19-3/4	19C	AL	3	RH	AVAIL.
18614A40	17-1/4	19C	AL	3	RH	AVAIL.
77899A1	19-3/4	19	AL	3	LH	48- 18615A40
77899A10	19-3/4	19	AL	3	LH	48- 18615A40
18615A40	17-1/4	19C	AL	3	LH	AVAIL.
54723A 1	20	17	AL	3	LH	
54724A 1	20	17	AL	3	RH	
63303A 1	20	17	AL	3	LH	
63304A 1	20	17	AL	3	RH	
77896A 1	20	17	AL	3	RH	
77896A10	20	17	AL	3	RH	
18612A40	17-3/4	17C	AL	3	RH	AVAIL.
77897A1	20	17	AL	3	LH	
77897A10	20	17	AL	3	LH	
18613A40	17-3/4	17C	AL	3	LH	AVAIL.
54721A 1	19-3/4	15	AL	3	LH	
54722A 1	19-3/4	15	AL	3	RH	
77894A 1	19-3/4	15	AL	3	RH	
77894A10	19-3/4	15	AL	3	RH	
18610A40	18-1/4	15C	AL	3	RH	AVAIL.
77895A 1	19-3/4	15	AL	3	LH	
77895A10	19-3/4	15	AL	3	LH	
18611A40	18-1/4	15C	AL	3	LH	AVAIL.

MerCruiser TRS - Mirage

Rubber Hub - 370 Hp & Below
Thrust Hub 13171 Tab Washer 14-816629 Washer Splined 12-31211A2 Nut 11-52707A1

Solid Hub - 370 Hp & Up
Thrust Hub 14359 Splined Washer (FWD) 12-39701 Flat Washer (Rear) 12-39698 Nut 11-52707Q1

Part No.	Diameter	Pitch	Material	Blades	Rotation	Status or Supersession
821720A 5	14-3/4	29C	SS	3	RH	48-821720A56
821719A 5	14-3/4	29C	SS	3	LH	48-821719A56
19836A 5	14-3/8	27C	SS	3	RH	18280A56
18280A56	14-3/8	27C	SS	3	RH	N.L.A.
19835A 5	14-3/8	27C	SS	3	LH	48- 18281A56
13248A 5	14-1/2	25C	SS	3	RH	48- 13706A56
13247A 5	14-1/2	25C	SS	3	LH	
13246A 5	14-5/8	23C	SS	3	RH	
13245A 5	14-5/8	23C	SS	3	LH	48- 13705A56
13244A 5	14-3/4	21C	SS	3	RH	48- 13702A56
13243A 5	14-3/4	21C	SS	3	LH	48- 13703A56
13242A 5	15-1/4	19C	SS	3	RH	48- 13700A56
13241A 5	15-1/4	19C	SS	3	LH	48- 13701A56
19839A 5	15-1/2	17C	SS	3	LH	
19834A 5	15-1/2	17C	SS	3	RH	18278A56
19834A50	15-1/2	17	SS	3	RH	18278A56
18278A56	15-1/2	17	SS	3	RH	N.L.A.
19835A50	14-3/8	27	SS	3	LH	48- 18281A56
19836A50	14-3/8	27	SS	3	RH	18280A56
19836A50	15-1/2	17	SS	3	LH	
13241A50	15-1/4	19	SS	3	LH	48- 13701A56
13242A50	15-1/4	19	SS	3	RH	48- 13700A56
13243A50	14-3/4	21	SS	3	LH	48- 13703A56
13244A50	14-3/4	21	SS	3	RH	48- 13702A56
13245A50	14-5/8	23	SS	3	LH	48- 13705A56
13246A50	14-5/8	23	SS	3	RH	
13247A50	14-1/2	25	SS	3	LH	
13248A50	14-1/2	25	SS	3	RH	48- 13706A56
821719A50	14-3/4	29	SS	3	LH	48-821719A56
821720A50	14-3/4	29	SS	3	RH	48-821720A56

MerCruiser TRS - Cleaver (Solid Hub)

Splined Washer (FWD) 12-39701 Flat Washer (Rear) 12-39698 Nut 11-52707Q1

Part No.	Diameter	Pitch	Material	Blades	Rotation	Status or Supersession
74603A 4	14-1/4	25C	SS	3	LH	
13247A50	14-1/2	25	SS	3	LH	
74604A 4	14-1/4	25C	SS	3	RH	48- 13706A56
13248A50	14-1/2	25	SS	3	RH	48- 13706A56
68560A 4	15	23C	SS	3	RH	
74601A 4	14-1/2	23C	SS	3	LH	48- 13705A56
13245A50	14-1/2	23	SS	3	LH	48- 13705A56
74602A 4	14-1/2	23C	SS	3	RH	
13246A50	14-1/2	23	SS	3	RH	
68557A 4	15-1/4	21C	SS	3	LH	48- 13703A56
68558A 4	15-1/4	21C	SS	3	RH	48- 13702A56
74599A 4	14-3/4	21C	SS	3	LH	48- 13703A56
13243A50	14-5/16	21	SS	3	LH	48- 13703A56

Part No.	Diameter	Pitch	Material	Blades	Rotation	Status or Supersession
74600A 4	14-3/4	21C	SS	3	RH	48- 13702A56
13244A50	14-5/16	21	SS	3	RH	48- 13702A56
68555A 4	15-1/2	19C	SS	3	LH	48- 13701A56
68556A 4	15-1/2	19C	SS	3	RH	48- 13700A56
74597A 4	15	19C	SS	3	LH	48- 13701A56
13241A50	15	19	SS	3	LH	48- 13701A56
74598A 4	15	19C	SS	3	RH	48- 13700A56
13242A50	15	19	SS	3	RH	48- 13700A56

MerCruiser TRS - Cleaver (Rubber Hub)

NLA = 48-89799A5, 48-89801A5, 48-89803A5, 48-89804A5, 48-89805A5, 48-89806A5
Thrust Hub 92950 Tab Washer 14-816629 Washer 12-31211A2 Nut 11-52707Q1

Part No.	Diameter	Pitch	Material	Blades	Rotation	Status or Supersession
89805A 4	14-1/4	25C	SS	3	LH	N.L.A.
89806A 4	14-1/4	25C	SS	3	RH	N.L.A.
89803A 4	14-1/2	23C	SS	3	LH	N.L.A.
89804A 4	14-1/2	23C	SS	3	RH	N.L.A.
89801A 4	14-3/4	21C	SS	3	LH	N.L.A.
89802A 4	14-3/4	21C	SS	3	RH	N.L.A.
89802A 5	14-3/4	21C	SS	3	RH	N.L.A.
89799A 4	15	19C	SS	3	LH	N.L.A.
89800A 4	15	19C	SS	3	RH	N.L.A.
89800A 5	15	19C	SS	3	RH	N.L.A.

MerCruiser TRS - Laser

370 Hp & Below Only
Thrust Hub 12-835467 1 Tab Washer 14-816629 Washer 12-31211A3 Nut 11-52707Q1

Part No.	Diameter	Pitch	Material	Blades	Rotation	Status or Supersession
11078A40	14-1/8	25	SS	3	RH	48- 16550A46
11074A40	14-1/4	23	SS	3	RH	
11070A40	14-3/8	21	SS	3	RH	48-825862A47

MerCruiser TRS - Standard (Aluminum)

255 & 280 Hp Only
NLA = 48-66141A4, 48-66143A4, 48-66145A4, 48-66147A4
Thrust Hub 56292A4 Tab Washer 14-816629 Washer 12-31211A3 Nut 11-52707Q1

Part No.	Diameter	Pitch	Material	Blades	Rotation	Status or Supersession
65480A 4	14-1/2	25C	AL	3	RH	N.L.A.
79580A 4	14-1/2	25C	AL	3	RH	N.L.A.
78126A40	13-3/8	25C	AL	3	RH	N.L.A.
67874A 4	15	23C	AL	3	RH	48-832834A45
79578A 4	15	23C	AL	3	RH	48-832834A45
78124A40	13-1/2	23C	AL	3	RH	48-832834A45
65992A 4	15-1/4	21C	AL	3	RH	48-832832A45
79576A 4	15-1/4	21C	AL	3	RH	48-832832A45
78122A40	13-3/4	21C	AL	3	RH	48-832832A45
66432A 4	15-1/2	19C	AL	3	RH	48- 11324A45
11324A45	15-1/2	19C	AL	3	RH	AVAIL.
79574A 4	15-1/2	19C	AL	3	RH	48- 11324A45
11324A45	15-1/2	19C	AL	3	RH	AVAIL.
78120A40	14	19C	AL	3	RH	48-832830A45
66450A 4	16	17C	AL	3	RH	48- 16440A45
79572A 4	15-3/4	17C	AL	3	RH	48- 16440A45
78118A40	14-1/2	17C	AL	3	RH	48-832828A45

Part No.	Diameter	Pitch	Material	Blades	Rotation	Status or Supersession
832828A45	14-1/2	17C	AL	3	RH	AVAIL.
16440A40	16	16C	AL	3	RH	48- 16440A45

MerCruiser II

NLA = 48-54352A1, 48-54352A4, 48-54353A1, 48-54353A4, 48-53496A1, 48-53496A4, 48-53497A1, 48-53497A4, 48-49978A1, 48-49978A4, 48-49979A1, 48-49979A4, 48-54829A4, 48-49973A1, 48-49973A4, 48-49974A1, 48-49974A4, 48-33237A1, 48-33238A1, 48-33238A4, 48-4997

Part No.	Diameter	Pitch	Material	Blades	Rotation	Status or Supersession
48- 77900A40	19-1/2	21	AL	3	RH	AVAIL.
48- 77898A40	19-3/4	19	AL	3	RH	AVAIL.

MerCruiser III

NLA = 48-47691A1, 48-47691A4, 48-47692A1, 48-47692A4, 48-47693A1, 48-47693A4, 48-47694A1, 48-47694A4, 48-47695A4, 48-47696A4, 48-47697A1, 48-47697A4, 48-47698A1, 48-47698A4, 48-47699A4, 48-47700A4, 48-47701A1, 48-47707A4, 48-47702A1, 48-47702A4, 48-4770

Part No.	Diameter	Pitch	Material	Blades	Rotation	Status or Supersession
47707A 1	19-1/4	25	AL	3	LH	N.L.A.
47708A 1	19-1/4	25	AL	3	RH	N.L.A.
47705A 1	19-3/4	23	AL	3	LH	N.L.A.
47704A 1	20	21	AL	3	RH	N.L.A.
47699A 1	20	17	AL	3	LH	N.L.A.
47700A 1	20	17	AL	3	RH	N.L.A.
47695A 1	20	13	AL	3	LH	N.L.A.
47696A 1	20	13	AL	3	RH	N.L.A.
47704A10	20	21	AL	3	RH	N.L.A.
47708A10	19-1/4	25	AL	3	RH	N.L.A.
47707A10	19-1/4	25	AL	3	LH	N.L.A.
47699A10	20	17	AL	3	LH	N.L.A.
47700A10	20	17	AL	3	RH	N.L.A.
47695A10	20	13	AL	3	LH	N.L.A.
47696A10	20	13	AL	3	RH	N.L.A.

PROPELLER HARDWARE AND ACCESSORIES

PROPELLER HARDWARE AND ACCESSORIES

HUB CROSS-REFERENCE CHART

Mercury Rubber Hub Cross-Reference Chart

Application	Name	Hub Style	Hub or Sleeve P/N	Thrust Washer	Aft Washer / Sheer Pin	Nut	Cotter Pin	Nut Kit
Mercury/Mariner 2.5-3.5 HP FourStroke	Flo-Torq I	Rubber	N/A	N/A	17-815111Q02	N/A	18- 95295	N/A
Mercury/Mariner 4-6 HP FourStroke	Flo-Torq I	Rubber	N/A	16145Q01	12- 16146	11- 16147	18-815026	N/A
Mercury/Mariner 8-9.9 HP(2005 and Newer)	Flo-Torq I	Rubber	897453T	8M0070881	12- 16146	11- 16147	18-815026	803743Q02
Mercury/Mariner 6-15 HP 2-Stroke, 9.9 HP FourStroke (1995-2004), 15 HP FourStroke (Thru 2007)	Flo-Torq I	Rubber	827598T	821932 1	821932 1	11- 40140	N/A	11- 13914Q02
Mercury/Mariner 9.9 HP BigFoot, ProKicker (2005 and Newer) 15-20 FourStroke (2007 and Newer)	Flo-Torq I	Rubber	8M0054769	803743	12- 16140 2	11- 16147 1	18-815026 4	803743Q01
Mercury/Mariner 20/25 HP 2-Strokes (1980-2006), 9.9 & 15 HP BigFoot (1999-2004)	Flo-Torq I	Rubber	19669T	858498	N/A	11- 40119 12	N/A	11- 40119Q02
Mercury/Mariner 25-30 HP FourStrokes (2006 and Newer)	Flo-Torq I	Rubber	897001T	16145 2	12- 16140 2	11- 16147 1	N/A	13914Q03
Mercury/Mariner 25 HP BigFoot, 30 HP 2-Strokes, 40-60 HP 2-Strokes and FourStrokes excluding BigFoot(1977 and Newer)	Flo-Torq I	Rubber	43676T	73345A 1	14- 76281Q	11- 69578Q 1	N/A	11- 31990Q02
Mercury/Mariner 40-60 BigFoot FourStrokes with Silver (A33) Propellers	Flo-Torq I	Rubber	859173	12-835467Q01	12- 31211Q03	11- 52707Q 1	N/A	11-827614Q01

FLO-TORQ II APPLICATION CHARTS

Mercury/Mariner/Force & MerCruiser Sterndrive

Application	Flo-Torq Hub Kit	Forward Trust Washer	Drive Sleeve	Bushing	Aft Adaptor	Aft Spacer/ Washer	Nut	Cotter Pin
Mercury 75 2 Stroke 1984 & Newer, 90 & 115 2 Stroke 1978 & Newer, 125 HP 1994 & Newer, Verado 200-300 HP, Alpha & Bravo 1 Sterndrives	835257K 1	12-835467Q01	835290Q 1	N/A	826074Q 1	8M0042130	11- 52707Q 1	N/A
Force 75 1999, 90-150 1995 and Newer	835257K 1	12-835467Q01	835290Q 1	N/A	826074Q 1	8M0042130	11- 52707Q 1	N/A
Mercury 40-60-HP BigFoot and 90-115 4 Stroke	835257K 9	12-835467Q01	881940Q 1	N/A	8M0061986	8M0042130	11- 52707Q 1	N/A
Mercury Verado 135-175 (Flo-Torq IV)	835257K10	12-835467Q01	896233Q01	N/A	8M0061986	8M0042130	11- 52707Q 1	N/A
Mercury V-6 For Use With Surfacing Propellers; Tempest Plus, Trophy Plus, & Fury	835257K 6	12-835467Q01	835290Q 1	23-856163Q 1	826074Q 1	8M0042130	11- 52707Q 1	N/A
Mercury Racing Choppers & Cleavers for V-6 Outboards	835258K 1	12-835467Q01	850821Q11	N/A	826074Q 1	8M0042130	11- 52707Q 1	N/A
Mercury 400+ Bravo I	835258K 2	12-835467 5	850821Q2	849501	826074Q 1	8M0042130	11- 52707Q 1	N/A
Verado 350 SCI, Mercruiser XZ and XR Racing Sport and Torque Master (1.25 Shaft)	840389K06	N/A	N/A	N/A	N/A	N/A	N/A	N/A

Yamaha Flo-Torq

Application	Flo-Torq II Hub Kit	Forward Trust Washer	Drive Sleeve	Bushing	Aft Adaptor	Aft Spacer/ Washer	Nut	Cotter Pin
Yamaha 115, 130 HP 1984 and newer	835271Q 2	12-853948T	835290Q 1	N/A	826074Q 1	12-850076	859939	18- 47959
Yamaha 50-100 HP	835272Q 1	12-853555	835290Q 1	N/A	826074Q 1	12-850076	859939	18- 47959
Yamaha 150-300 HP 4-Strokes, Including SHO	835274Q 1	12-853948T	835290Q 1	N/A	826074Q 1	12-887972	859939	18- 47959
Yamaha 150-300 HP 2-Strokes, HPDI, VMAX and 130-300HP Sterndrives	835271Q 2	12-853948T	835290Q 1	N/A	826074Q 1	12-850076	859939	18- 47959
Yamaha 200-250 HP VMAX SHO 4-Strokes	8M0075402	23-8M0064826	835290Q 1	23-856163Q 1	826074Q 1	12-887972	859939	18- 47959

Evinrude/Johnson/OMC & Volvo SX Flo-Torq

Application	Flo-Torq II Hub Kit	Forward Trust Washer	Drive Sleeve	Bushing	Aft Adaptor	Aft Spacer/ Washer	Nut	Cotter Pin
Evinrude/Johnson V-4	835266Q 1(1)	859915	835290Q1(Delrin)	N/A	834839Q	N/A	859929	18- 89961
Johnson 90-115 HP 4-Stroke	835283Q 1	12-888939	835290Q1(Delrin)	N/A	826074Q 1	12-887972	859939	18- 47959
Johnson 140 HP 4-Stroke Outboard	835283Q 2	12-835467008	835290Q1(Delrin)	N/A	826074Q 1	12-887972	859939	18- 47959
Evinrude/Johnson/OMC Stern Drives V-6, V-8 1991 & Newer	835265Q02	12-835467008	835290Q1(Delrin)	N/A	834839Q	Included with Nut	802009Q 1	Included with Nut
Evinrude/Johnson 250 V-6 2002 & Newer	835265Q02	12-835467008	835290Q1(Delrin)	N/A	834839Q	Included with Nut	802009Q 1	Included with Nut
Evinrude/Johnson/OMC Stern Drives V-6, V-8/ 1990 & Older	835267Q 1	12-835467Q01	835290Q1(Delrin)	N/A	834839Q	Included with Nut	802009Q 1	Included with Nut
OMC Cobra SX/Volvo SX 1994 & Newer (19 tooth spline)	835270Q 1	12-835467008	835290Q1(Delrin)	N/A	850330Q	879143	802126Q 1	Included with Nut

(1) Use hub kit only with Quicksilver small lybrinth seal propellers: QA2202X thru QA2208X, QA 3828X thru QA3832X and QS5136X thru QS5144X.

Honda Flo-Torq

Application	Flo-Torq II Hub Kit	Forward Trust Washer	Drive Sleeve	Bushing	Aft Adaptor	Aft Spacer/ Washer	Nut	Cotter Pin
Honda 75-90 HP 1999 & Newer, 115-130 HP All YRS.	835279Q 2	12-853359	835290Q1(Delrin)	N/A	826074Q 1	8M0042130	11- 52707Q 1	N/A
Honda 75-90 HP thru 1998	835277Q 1	12-835467Q01	835290Q1(Delrin)	N/A	826074Q 1	8M0042130	11- 52707Q 1	N/A
Honda 135-250 HP 4-Stroke	835278Q 1	12-888451	835290Q1(Delrin)	N/A	826074Q 1	12-887972	859939	18- 47959

Suzuki & Tohatsu/Nissan Flo-Torq

Application	Flo-Torq II Hub Kit	Forward Trust Washer	Drive Sleeve	Bushing	Aft Adaptor	Aft Spacer/ Washer	Nut	Cotter Pin
Suzuki 60 HP 4-Stroke (1998 and newer), 70 HP 4-Stroke (1998-2008), 75-140 HP 2-Stroke	835282Q 1(1)	12-854621	835290Q 1	N/A	834839Q	12-887972	859939	18- 47959
Suzuki 70-90 HP (2009 and newer)	835283Q03	12-8M0042329	835290Q 1	N/A	826074Q 1	12-887972	859939	18- 47959
Suzuki 90-115 HP 4-Stroke (2001-2008)	835283Q 1	12-888939	835290Q 1	N/A	826074Q 1	12-887972	859939	18- 47959
Suzuki 140 HP 4-Stroke, 100-115 HP 4-Stroke (2009 and newer)	835283Q 2	12-835467008	835290Q 1	N/A	826074Q 1	12-887972	859939	18- 47959
Suzuki 150-300 HP	835281Q 1	12-853359	835290Q 1	N/A	826074Q 1	12- 31211Q03	859939	18- 47959
Tohatsu/Nissan 60-140 HP	835284Q 1	12-853948T	835290Q 1	N/A	826074Q 1	12- 16140	11- 16147	18-815026

(1) Use hub kit only with Quicksilver small lybrinth seal propellers: QA2202X thru QA2208X, QA 3828X thru QA3832X and QS5136X thru QS5144X.

FLO-TORQ REFLEX HUB KITS

FLO-TORQ REFLEX HUB KIT QUICKSILVER



835257Q12

Kit includes: Forward thrust washer, Reflex drive sleeve (8M0047148), Aft Washer and Prop Nut.

Mercury/Mariner 40-60 HP FourStroke (not BigFoot), 30 HP FourStroke 1994-2005, 30-60 HP 2-Stroke 1977 and newer, 25 HP BigFoot, 55 HP SeaPro/ Marathon, Yamaha 40-60 HP (Excluding 50T and 60T), Honda 40-50 HP with separately purchased 8M0046466 Thrust Washer, Suzuki 35-60 HP with separately purchased 8M0088039 Thrust Washer, Tohatsu 35-50 hp with separately purchased 8M0053074 Thrust Washer

Quicksilver Branded, Hanging Box Point of Sale Packaged.

FLO-TORQ REFLEX HUB KIT MERCURY

835257K12

Kit includes: Forward thrust washer, Reflex drive sleeve (8M0047148), Aft Washer, O-Ring (86614) and Prop Nut

Mercury/Mariner 40-60 HP FourStroke (not BigFoot), 30 HP FourStroke 1994-2005, 30-60 HP 2-Stroke 1977 and newer, 25 HP BigFoot, 55 HP SeaPro/ Marathon, Yamaha 40-60 HP (Excluding 50T and 60T), Honda 40-50 HP with separately purchased 8M0046466 Thrust Washer

Mercury Branded, Hanging Box Point of Sale Packaged.

DRIVE SLEEVE



8M0047148

Plastic drive sleeve Flo-Torq Reflex Composite Drive Sleeve

PROPELLER HARDWARE AND ACCESSORIES

FLO-TORQ II, III, IV & HD HUB KITS

Mercury Propellers can improve improve performance on Non-Mercury powered Boats. Use the following Flo-Torq II chart for proper hardware selection.

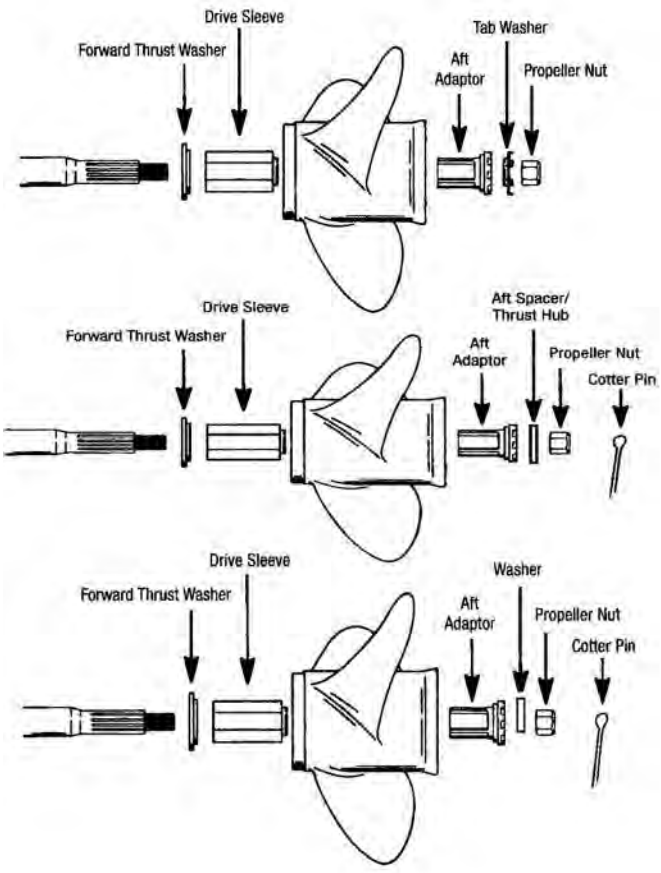

FLO-TORQ II HUB KIT MERCURY



835257K 1

12-835467 1 Forward thrust washer
835290A1 Plastic drive sleeve
826074Q1 Aft adapter8M0042130 Tab washer
11-827614 Prop nut

Mercury/Mariner 40-60 HP Bigfoot, 70-250 HP, Verado, Force 90-120, MerCruiser Alpha & Bravo One (under 400 HP)

Mercury Branded, Hanging Box Point of Sale Packaged.

FLO-TORQ II HUB KIT WITH BUSHING MERCURY



835257K 6

12-835467 1 Forward thrust washer
835290A1 Plastic drive sleeve
23-856163A1 Bushing
826074T1 Aft adapter8M0042130 Tab washer
11-52707Q1 Prop nut

Typically used for the Fury, Tempest Plus, Trophy Plus, Revolution 4 & Bravo 1 in a surface piercing application.

Mercury Branded, Hanging Box Point of Sale Packaged.

FLO-TORQ III HUB KIT MERCURY



835257K 9

12-835467 1 Forward thrust washer
881940A1 Drive sleeve assembly
878584 Aft adapter
14-816629 Tab washer
11-52707Q1 Prop nut

Flo-Torq III 40-60 HP FourStroke Bigfoot 75-115 HP FourStroke and Opti-Max (Aluminum or Stainless steel props, reduces prop rattle)

Mercury Branded

FLO-TORQ IV HUB KIT MERCURY



835257K10

12-835467 1 Forward thrust washer
896233A01 Drive sleeve assembly
878584 Aft adapter
14-816629 Tab washer
11-52707Q1 Prop nut

Flo-Torq IV hub kit for Verado L4SC 135-175 HP (Aluminum or Stainless steel props, reduces prop rattle).

Mercury Branded

FLO-TORQ II SOLID HUB KIT MERCURY



835258K 1

12-835467 5 Forward thrust washer (hardend)
850821Q11 Steel (3 7/8 in.) drive sleeve
826074Q1 Aft adapter
8M0042130 Tab washer
11-827614 Prop nut

For use with Chopper, Cleaver, Lightning ET, Pro ET & old style Bravo I (with MerCruiser logo) propellers.

Mercury Branded, Hanging Box Point of Sale Packaged.

FLO-TORQ II SOLID HUB KIT MERCURY



835258K 2

12-835467 5 Forward thrust washer (hardend)
850821Q12 Steel (3 5/8 in.) drive sleeve
826074Q1 Aft adapter
8M0042130 Tab washer
11-827614 Prop nut (1 in. Propshaft)

Standard length hub for use with the Fury, Tempest Plus, Mirage Plus, REV 4, Trophy Plus, Bravo I & Maximus propellers (Bravo One Sterndrive 400HP+, 1" prop shaft).

Mercury Branded, Hanging Box Point of Sale Packaged.

MERCURY FLO-TORQ SSR HD



8M0101601

840383A 2 prop nut & washer kit

For use with Mercury/Mariner outboards with a 1.25" propeller shaft. 225-250 HP Pro XS with Torque Master II gearcase, 300 and 350 HP Verado with 5.44" HD gearcase, and Verado 400R

Mercury Branded

FLO-TORQ II HD SOLID HUB KIT



840389K06

840382A02 black snubber strip replacement kit
840383A 2 prop nut & washer kit

For use with HD (Heavy Duty) 1.25" propshaft when installed on Sport Master, Torque Master I and II, Fleet Master and Verado 5.25" gearcase and MerCruiser Bravo One XR or XZ, Sport Master and shorty Sport Master Bravo I XR Sport sterndrives.

Mercury Branded

FLO-TORQ II HUB KIT HONDA



835277Q 1

12-835467 1 Forward thrust washer
835290A1 Plastic drive sleeve
826074Q 1 Aft adapter8M0042130 Tab lock washer
11-827614 Prop nut

Honda outboards (75-90 HP thru 1998)

Quicksilver Branded, Hanging Box Point of Sale Packaged.

FLO-TORQ II HUB KIT HONDA



835279Q 2

12-853359 Fwd thrust washer
835290A1 Plastic drive sleeve
826074Q 1 Aft adapter
12-887972 Washer
859939 Lock
18-47959 Cotter pin

Honda outboards (75-90 HP 1999-present, 115-130 HP)

Quicksilver Branded, Hanging Box Point of Sale Packaged.

PROPELLER HARDWARE AND ACCESSORIES

FLO-TORQ II HUB KIT HONDA



835278Q 1

12-888451 Forward thrust washer
835290A1 Plastic drive sleeve
826074Q 1 Aft adapter
12-887972 Spacer
859939 Nut
18-47959 Cotter Pin

Honda 135, 150, 200, 225 and 250 HP 4-Stroke. Can be used with Mercury Racing propellers.

FLO-TORQ II HUB KIT EVINRUDE, JOHNSON & OMC



835265Q02

12-835467-008 Forward thrust washer, 835290A1 Plastic drive sleeve, 834899Q Aft adapter, 12- 887972 Aft Washer, 802009Q1 Nut, Cotter pin and spacer

Evinrude, Johnson outboards & OMC stern drive (V-6 & V-8 gearcase, 1991 & Newer including new 250 HP V-6 outboard and 2003 V-6 with Cresent gearcase). Can be used with Mercury Racing propellers.

Quicksilver Branded, Hanging Box Point of Sale Packaged.

FLO-TORQ II HUB KIT EVINRUDE, JOHNSON & OMC



835267Q 1

12-835467 1 Forward thrust washer
835290A1 Plastic drive sleeve
834899Q Aft adapter
802009Q 1 Nut Kit
(Cotter pin and spacer included with Nut kit)

Evinrude/Johnson, OMC stern drives (V-6 & V-8 gearcase, 1984-1990)

Quicksilver Branded, Hanging Box Point of Sale Packaged.

FLO-TORQ II HUB KIT EVINRUDE & JOHNSON



835266Q 1

859915 Thrust washer
835290A 1 Plastic drive sleeve
834839Q Aft adapter
859929 Nut
18-89961 Cotter pin

Evinrude & Johnson outboards (V-4 gearcase, 1968-present). For use with propellers that have cut down labyrinth seal.

Quicksilver Branded, Hanging Box Point of Sale Packaged.

FLO-TORQ II HUB KIT EVINRUDE E-TEC G2



8M0107220

Forward thrust washer
Plastic drive sleeve
Aft adapter
Nut Kit
(Cotter pin and spacer included with Nut kit)

Evinrude E-TEC G2, 2014 AND NEWER

Quicksilver Branded, Hanging Box Point of Sale Packaged.

FLO-TORQ II HUB KIT



835283Q 1

12-888939 Fwd thrust washer
835290A1 Plastic drive sleeve
826074Q1 Aft adapter
12-887972 Washer
859939 Nut
18-47959 Cotter Pin

Johnson & Suzuki 90-115 HP 4-Stroke O/B

Quicksilver Branded, Hanging Box Point of Sale Packaged.

FLO-TORQ II HUB KIT SUZUKI



835283Q 2

12-835467 1 Fwd thrust washer
835290A1 Plastic drive sleeve
826074Q1 Aft adapter
12-887972 Washer
859939 Nut
18-47959 Cotter Pin

Johnson & Suzuki 140 HP 4-Stroke O/B

Quicksilver Branded, Hanging Box Point of Sale Packaged.

FLO-TORQ II HUB KIT SUZUKI



835282Q 1

12-854621 Fwd thrust washer
835290A1 Plastic drive sleeve
834839Q Aft adapter
12-887972 Washer
859939 Nut
18-47959 Cotter Pin

Suzuki 60 HP 4-Stroke (1998 and Newer) 70 HP 4-Stroke (1998-2008) 75-140 HP 2-Stroke

Quicksilver Branded, Hanging Box Point of Sale Packaged.

FLO-TORQ II HUB KIT SUZUKI



835281Q 1

12-853359 Fwd thrust washer
835290A1 Plastic drive sleeve
826074Q 1 Aft adapter
12-31211A3 Washer
859939 Nut
18-47959 Cotter Pin

Suzuki 150-225 HP 2-Stroke Outboards and 150-250 HP 4-Stroke Outboards. Can be used with Mercury Racing propellers.

Quicksilver Branded, Hanging Box Point of Sale Packaged.

FLO-TORQ II HUB KIT SUZUKI



835283Q03

12-8M0042329 Fwd thrust washer
835290Q 1 Plastic drive sleeve
826074Q 1 Aft adapter
12-887972 Washer
859939 Nut
18-47959 Cotter Pin

Suzuki 70-90 HP 2009 and Newer

Quicksilver Branded, Hanging Box Point of Sale Packaged.

FLO-TORQ II HUB KIT TOHATSU



835284Q 1

12-853948T Fwd thrust washer
835290A1 Plastic drive sleeve
826074Q1 Aft adapter
12-16140 Washer
11-16147 Nut
18-815026 Cotter Pin

Tohatsu/Nissan (70C, 90-140 HP)

Quicksilver Branded, Hanging Box Point of Sale Packaged.

FLO-TORQ II HUB KIT



835270Q 1

12-835467 7 Forward thrust washer
835290A1 Plastic drive sleeve
850330Q Aft adapter
879143 Spacer
802126Q 1 Nut
Cotter pin included with Nut

OMC Cobra/Volvo SX sterndrives (19 tooth spline, 1996-present)
Caution! When installing stainless steel propellers, remove the anode to bearing carrier and check clearance before operation.

Quicksilver Branded, Hanging Box Point of Sale Packaged.

PROPELLER HARDWARE AND ACCESSORIES

FLO-TORQ II HUB KIT YAMAHA



835272Q 1

12-853555Q Forward thrust washer
835290A1 Plastic drive sleeve
826074Q 1 Aft adapter
12-850076 Spacer
859939 Nut
18-47959 Cotter Pin

Yamaha outboards (50-100 HP, splined forward thrust washer)

Quicksilver Branded, Hanging Box Point of Sale Packaged.

FLO-TORQ III HUB KIT YAMAHA



835272Q09

12-853555Q Forward thrust washer
881940A 1 Drive Sleeve Assembly
878584 Aft adapter
12-850076 Spacer
859939 Nut
18-47959 Cotter Pin

Yamaha outboards (50-100 HP, splined forward thrust washer)

Quicksilver Branded, Hanging Box Point of Sale Packaged.

FLO-TORQ II HUB KIT YAMAHA



835271Q 2

12-853948T Forward thrust washer
835290A1 Plastic drive sleeve
826074Q 1 Aft adapter
12-850076 Spacer
859939 Nut
18-47959 Cotter Pin

Yamaha 150-300 HP HPDI 2-stroke outboards using a one piece thrust washer and all Yamaha stern drives

Quicksilver Branded, Hanging Box Point of Sale Packaged.

FLO-TORQ II HUB KIT YAMAHA



8M0075402

8M0064826 Forward thrust washer
835290A1 Plastic drive sleeve
826074Q 1 Aft adapter
12-887972 Spacer
859939 Nut
18-47959 Cotter Pin

200-250 HP VMAX SHO 4 stroke outboards using a two piece thrust washer.

Quicksilver Branded, Hanging Box Point of Sale Packaged.

FLO-TORQ III HUB KIT YAMAHA



835271Q09

12-853948T Forward thrust washer
881940A 1 Drive Sleeve Assembly
878584 Aft adapter
12-850076 Spacer
859939 Nut
18-47959 Cotter Pin

Yamaha outboards & stern drives (V-4 & V-6 gearcase, 1980-present), excluding the four stroke 225EFI.

Quicksilver Branded, Hanging Box Point of Sale Packaged.

FLO-TORQ II HUB KIT



835274Q 1

12-853948-1 Forward thrust washer
835290A1 Plastic drive sleeve
826074Q 1 Aft adapter
12-887972 Spacer
859939 Nut
18-47959 Cotter Pin

150-300 HP 4 stroke outboards (Excluding SHO outboards).

Quicksilver Branded, Hanging Box Point of Sale Packaged.

DRIVE SLEEVE



835290Q 1

Plastic drive sleeve Flo-Torq II

Quicksilver Branded, Hanging Box Point of Sale Packaged.

DRIVE SLEEVE



881940Q 1

Flo-Torq III Spring Drive Sleeve

For use with 40 - 60 BigFoot, 75 - 115 HP FourStroke outboards (Reduce prop rattle)

DRIVE SLEEVE



896233A01

Flo-Torq IV Spring Drive Sleeve

For use with Verado L4SC 135-175 HP (Aluminum or Stainless steel props, reduces prop rattle).

HUB ASSEMBLY WITH SLEEVE



850821Q11

Long, (3 7/8") with bushing (849501-1), included in steel hub kits

Stainless steel drive sleeve for A45/A55 P/N suffix (400 HP+) for use with Chopper, Cleaver, Lightning ET, Pro ET & Bravo I (with MerCruiser logo) propellers. Used with Mercury and selected Yamaha propshafts.

Quicksilver Branded, Hanging Box Point of Sale Packaged.

HUB ASSEMBLY WITH SLEEVE



850821Q12

Short, (3 5/8") with bushing (849501-1), included in steel hub kits

Stainless steel drive sleeve for A46/A47/A56 P/N suffix (400 HP+). Standard length hub for use with Tempest Plus, Mirage Plus, REV 4, Trophy Plus, Bravo I & Maximus propellers (Bravo One Sterndrive 400HP+, 1" prop shaft). Used with Mercury and selected Yamaha propshafts.

Quicksilver Branded, Hanging Box Point of Sale Packaged.

DRIVE SLEEVE ADAPTOR



826074Q 1

Adaptor for use with Flo-Torq II plastic Drive Sleeve (15 Spline)

Mercury 40 BigFoot - 250 HP outboards & MerCruiser Alpha and Bravo One Sterndrives, Honda 75 - 225 HP, Suzuki 90 - 140 4-stroke & 150 - 225 HP, Tohatsu/Nissan 40 - 140 HP, Yamaha 50 - 225 HP outboards (1" prop shaft).

Quicksilver Branded, Hanging Box Point of Sale Packaged.

AFT ADAPTER - DRIVE SLEEVE



8M0061986

Drive sleeve for use with Flo-Torq III and IV. (15 Spline) Includes pin style tab washer

AFT ADAPTER - DRIVE SLEEVE



834839Q

Adaptor OMC, Suzuki V-4 (Flo-Torq II) 13 spline

PROPELLER HARDWARE AND ACCESSORIES

DRIVE SLEEVE ADAPTOR

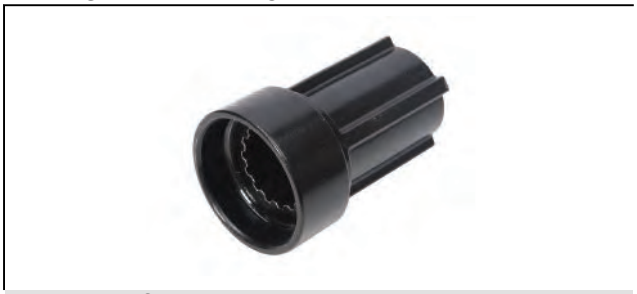

834899Q

Adaptor OMC V-6, V-8 outboard (Flo-Torq II) 15 Spline

AFT ADAPTER - DRIVE SLEEVE



850330Q

Adaptor Volvo SX, 19 spline (Flo-Torq II)

HUB KIT



8M8022263

Double nut kit for use with Mercury Racing NXT1 sterndrives adapting Cleaver propellers.

SNUBBER STRIP KIT



840382A02

Snubber strips and double sided tape.

For use with Mercury Racing HD Hub Kit (840389K06).

BUSHING - PROP HUB



23-849501Q 1

Included in steel hub kits

(Flo-Torq II)

BUSHING - PROP HUB



23-856163Q 1

Forward bushing for Flo-Torq II drive sleeve

Typically used for Tempest Plus, Trophy Plus, Revolution 4 & Bravo 1 in a surface piercing application with Flo-Torq II.
Note, this bushing is included in Flo-Torq kit # 835257K6 / 835257Q 6.

PROP BUSHING



23-822974

Prop Bushing.

Fits Mercury Racing Six Drive (thin)

PROP EXHAUST SEAL RING



878421

Will reduce ventilation when using Trophy Plus on a V-6 gearcase (prevents over/under exhaust).
Recommended on 200- 275 Verado when using Trophy Plus.

VENT CONTROL RING



8M0086395

Reduces ventilation when used with Pro Max propellers on 4.8" gearcase; also recommended to use on the Mercury 150 FS and 75 - 115 CT with Trophy Plus propellers. The vent control ring allows minimal exhaust to flow between gearcase and ring during planing. Place the ring chamfer side up on the floor, press the propeller into the ring.

BUSHING



23-823516

Blade bushing Power 2 shifting prop

Priced individually, sold @ multiples of 6

RETAINING RING



53-822975

For Mercury Racing Six Drive prop bushings 822973 & 822974.

PROP REVERSE KIT



822559Q01

Prop reverse kit (6-15 HP 2-Stroke)

Priced individually, sold @ multiples of 2

ANODES

PROP NUT ANODE KIT



809664A 1

1-1/8 in. Shaft, 3/4 in. NF 16

Fits Mercury/Mariner 70 hp and higher outboards (except 225 EFI FourStroke); Also fits MC-I, R, MR, Alpha, Bravo One & TRS sterndrives (1970 & newer)

PROP NUT ANODE KIT



809666A02

Aluminum, For use in saltwater or freshwater.
1-3/8 in. Shaft, 1 in. NF 14

Fits Bravo III drives (s/n 0M179451 and below)

809666A03

Magnesium, For use in freshwater only.
1-3/8 in. Shaft, 1 in. NF 14

Fits Bravo III drives (s/n 0M179451 and below)

REPLACEMENT PROP NUT ANODE



809662T

2 in. Aluminum Anode Shell
Replacement Shell for 809662A 1

PROPELLER HARDWARE AND ACCESSORIES

REPLACEMENT PROP NUT ANODE



809666T

2-5/16 in. Aluminum Anode Shell
Replacement Shell for 809666A 1and 809666A02

REPLACEMENT PROP NUT ANODE



809670T

2-1/2 in. Aluminum Anode Shell
Replacement Shell for 809670A 1

ANODIC PLATE



76214Q 5

Aluminum
Provides additional clearance for high rake propellers.
Fits Mercury/Mariner 35-300hp, Force 90 & 120hp 1995 and newer, MerCruiser Alpha One Gen II and Bravo I, II, III, X XR & XZ drives.
Priced individually, sold @ multiples of 2
Quicksilver Branded, Clamshell Package Point of Sale Packaged.

DIFFUSER RINGS

DIFFUSER RING



87715T

Mercury 20-25 HP (current product)

DIFFUSER RING



68861T

Mercury/Mariner 25 (4-Stroke), 30-60 HP, Force 40-75 HP

DIFFUSER RING



68858T

Mercury/Mariner 41/4" gearcase current Black Max (75-125 HP)

DIFFUSER RING



45676T

Mercury/Mariner V-6, Alpha, Bravo I & TRS (current 43/4" gearcase propellers)

DIFFUSER RING



54737T

MerCruiser Bravo II

DIFFUSER RING



42594T

OMC 9.9 - 15 HP

DIFFUSER RING



859878

Suzuki 15

DIFFUSER RING



859879

Suzuki 25 - 30

DIFFUSER RING



859871

Yamaha 8
OEM P/N 6G1-45986-00-94

DIFFUSER RING



859873

Yamaha 25 - 30
OEM P/N 6J8-45986-10-98

PROP NUT KITS

PROP NUT KIT



FA94094-2

819883 Prop nut
18-89961 Cotter pin
25-20195 O-Ring
Force 30, 40, 50

PROP NUT KIT



11-817752A 1

820100 Prop nut
18-45882 Cotter pin
Force 4, 5, 7.5 & 15

PROPELLER HARDWARE AND ACCESSORIES

PROP NUT KIT



11- 13914Q02

821932 1 Thrust washer, 23-42091 1 Spacer, 11-40140 Prop nut
Mercury/Mariner 6-15 HP 2-cycle, 9.9 hp FourStroke (1994-2004), 15 hp FourStroke (1994-2006), Force 9.9/15 hp 2-cycle 1998 & newer.
Priced individually, sold @ multiples of 2
Quicksilver Branded, Clamshell Package Point of Sale Packaged.

PROP NUT KIT



13914Q03

Prop nut, thrust hub, cotter pin & washer
Fits the Mercury/Mariner 25 & 30 hp. EFI FourStroke outboards beginning with MY2006.
Priced individually, sold @ multiples of 2

PROP NUT KIT



803743Q01

803743 THRUST HOLDER
12-16140 2 WASHER
11-16147 1 PROP NUT
18-815026 4 COTTER PIN
Fits the Mercury / Mariner 9.9 HP BF FS/ Pro Kicker, 15/20 HP FS (9.9 Big Foot Model Year 2005 and Newer) (15/20 HP FS 2007 and Newer).
Priced individually, sold @ multiples of 2

PROP NUT KIT



803743Q02

8M0070811 THRUST HOLDER
12-16146 WASHER
11-16147 PROP NUT
18-815026 1 COTTER PIN
Mercury / Mariner 8/9.9 HP FS, (Model Year 2005 and Newer)
Priced individually, sold @ multiples of 2

PROP NUT KIT



11- 64075A 1

23-65439 Spacer
12-79552 Washer
11-61075(11-89103) Prop nut
Mercury/Mariner 200 (old 20 HP)

PROP NUT KIT



11- 40119Q02

858498 Front thrust washer, 11-40119 12 Prop nut
Mercury/Mariner 18-25 HP (1980 to present)
Priced individually, sold @ multiples of 2
Quicksilver Branded, Clamshell Package Point of Sale Packaged.

PROP NUT KIT



11- 69578Q 1

Kit includes a special locking nut and two tab washers.

For use on Mercury/Mariner 30-60 hp. outboard engines.

Priced individually, sold @ multiples of 2

Quicksilver Branded, Clamshell Package Point of Sale Packaged.

HARDWARE KIT



8M0088039

Adapts 40-60 HP Black Diamond, Nemesis, and Silverado propellers with Flo-Torq Reflex Hubs to fit Suzuki 35-65 HP engines. Kit contains both forward and aft washers.

HARDWARE KIT



8M0053074

Adapts Mercury 30-60 HP Black Max, Trophy Sport & Vengeance propellers with Flo-Torq Reflex Hubs to fit Tohatsu 40-50 HP engines. Kit contains both forward and aft washers.

PROP NUT KIT



11- 31990Q02

73345A1 Front thrust washer, 14-76281 Tab washer, 11-69578Q1 Prop nut

Mercury/Mariner 30/40 HP (1989 to present), 50-60 HP (1991 to present, excluding Bigfoot), Force 40-50 HP (1995 & newer), Force 70 HP (1991 & newer), Force 75 HP (1996). Rubber hub propellers only. Purchase this hardware kit to complete install of a rubber hub propeller when propeller hardware is not included with engine.

Priced individually, sold @ multiples of 2

Quicksilver Branded, Clamshell Package Point of Sale Packaged.

PROP NUT KIT



11-827614Q04

13191A1 Front thrust washer, 14-816629Q Tab washer, 11-52707Q1 Prop nut

For Aft-Installed Rubber Hub Props: Fits Mercury/Mariner 70-140 (Inline 6 cyl. 1977 and newer), Mercury/Mariner 60 HP BigFoot and 75-125 HP (1987 & newer) 2-cycle outboards, Force 90-120 HP (1995 & newer) 2-cycle outboards.

Priced individually, sold @ multiples of 2

Quicksilver Branded, Clamshell Package Point of Sale Packaged.

PROP NUT KIT



11-827614Q01

12-835467 1 Front thrust washer, 13-42351 1 Continuity washer, 12-31211A3 Washer, 14-816629Q Tab washer, 11-52707Q1 Prop nut

Mercury/Mariner 70 HP+ (non Flo-Torq II)

Priced individually, sold @ multiples of 2

Quicksilver Branded, Clamshell Package Point of Sale Packaged.

PROPELLER HARDWARE AND ACCESSORIES

PROP NUT KIT



12-840383A 2

Kit includes locking prop nut, 1.5 in. washer, 1.5 in. cupped belleville washer & 1 13/16 in. spacer.

For use with HD (Heavy Duty) 1.25" propshaft when installed on Sport Master, Torque Master I and II, Fleet Master and Verado 5.25" gearcase and MerCruiser Bravo One XR or XZ, Sport Master and shorty Sport Master Bravo I XR Sport sterndrives. Tighten propeller nut to 55 lb-ft (75Nm).

PROP NUT KIT



11-8M0056234

Tab washer and Nut

Mercury/Mariner 75HP and up and Mercruiser Alpha and Bravo I sterndrives

Quicksilver Branded, Clamshell Package Point of Sale Packaged.

11-8M0056235

Tab washer and nut

Mercury outboards 75 HP and up and Mercruiser Alpha and Bravo 1 sterndrives

Mercury Branded, Clamshell Package Point of Sale Packaged.

PROP NUT KIT



11- 52707Q 1

Kit includes a special locking nut and two tab washers.

For use on Mercury/Mariner 75 hp. and higher outboard engines (except 225 EFI FourStroke) and for use on MerCruiser Alpha One and Bravo I drives.

Priced individually, sold @ multiples of 2

Quicksilver Branded, Clamshell Package Point of Sale Packaged.

PROP NUT KIT



11-827614A 3

14359 Front thrust washer
12-31211A3 Washer

Bravo 1 (four blade stainless prop) & Mirage Plus (A50) solid hub (not Flo-Torq II)

PROP NUT KIT



802002Q 1

Fits all Johnson/Evinrude 20, 25, 30 & 35 HP 1976-2000 except 1991 25 HP DR, DE and DT International models.

Priced individually, sold @ multiples of 2

Quicksilver Branded, Clamshell Package Point of Sale Packaged.

PROP NUT KIT



802010Q 1

Fits all Johnson/Evinrude 2 cylinder 40-60 HP 1974 and newer, and 3 & 4 cylinder 60-140 HP 1971 and newer. Fits Stinger 400 1978-1986, OMC Cobra 4 cylinder 1986-1989, and OMC Cobra 2.3 Liter 1990.

Priced individually, sold @ multiples of 2

Quicksilver Branded, Clamshell Package Point of Sale Packaged.

PROP NUT KIT



802009Q 1

Fits all Johnson/Evinrude Loop V-4 120-140 HP 1985, Loop V-4 140 HP Longshaft 1989-1994, Loop V-4 130 HP 1995 and newer, and V-6 & V-8 150-300 HP 1976 and newer. Also fits Stinger 800 1978-1986, OMC Cobra V Series 1986-1987 and Cobra/King Cobra 1992-1993.

Priced individually, sold @ multiples of 2

Quicksilver Branded, Clamshell Package Point of Sale Packaged.

PROP NUT KIT



802126Q 1

Fits all Johnson/Evinrude V-6 & V-8 150-300 HP 1976 and newer. Fits all OMC stern drives and Cobra SX models 1978 and newer (except Stinger 400 1978-1986, OMC Cobra 4 cylinder 1986-1989, and Cobra 2.3 Liter 1990).

Priced individually, sold @ multiples of 2

Quicksilver Branded, Clamshell Package Point of Sale Packaged.

PROP NUTS

PROP NUT



11-826711 12

Power 2 Shifting Prop

Priced individually, sold @ multiples of 2

PROP NUT



11-F7048

Force 60, 85-150 (single exhaust)

Priced individually, sold @ multiples of 2

PROP NUT



11- 80103M

Mariner 3.5 HP

PROP NUT



859946

Mariner 15 (651) 20 (653) 25 (648, 694), Yamaha 15

PROP NUT



11- 14279M

Mariner 40 HP (676A)

PROPELLER HARDWARE AND ACCESSORIES

PROP NUT



11-826709 11

Mercury 3.9, 3.6, 39, 40, 60, 110

Priced individually, sold @ multiples of 5

PROP NUT



11- 34933

7/16-20, nylon insert

For MCM inner transom studs and prop nut for Mercury 39, 60 (1968 & newer, 8 spline)

Priced individually, sold @ multiples of 10

PROP NUT



11- 16147

Fits Mercury 4 & 5 HP, and fits the 8/9.9 hp. FourStroke standard gearcase outboards (Model Year 2005 & newer).

PROP NUT



11- 40140

Mercury/Mariner 5-15 HP outboards using a Brass propnut with M10x1.5 threads and nylon insert.

Priced individually, sold @ multiples of 2

PROP NUT



11- 88228

A special molded nylon propnut fitting the 18/20/25 Hp. 2-cycle Mercury/Mariner outboards (1980 & newer), and the F9.9/15, 323cc BigFoot FourStroke outboards.

Priced individually, sold @ multiples of 2

PROP NUT KIT



11- 64075A 1

23-65439 Spacer
12-79552 Washer
11-61075(11-89103) Prop nut

Mercury/Mariner 200 (old 20 HP)

PROP NUT



11- 40119 12

Mercury/Mariner 15/20/25 Hp. Lightning/SeaPro/Marathon outboards using a Brass propnut with M12x1.75 threads and nylon insert.

PROP NUT



11- 46335

Mercury/Mariner 18-25 HP (1980-present)

PROP NUT



11-862907
Bravo III, aft (use 1-7/16 in. socket)

PROP NUT



11-859131
Bravo III, forward (use prop wrench 91-805457T1)

PROP NUT



11-826711 27
12-39817 Prop washer
For use with Mercury Racing Six Drive

PROP NUT



818911 2
Thruster (R, RL, RX,T series)

PROP NUT



859929
OMC 40-140 HP V-4 (OEM P/N 314053)

PROP NUT



859939
Suzuki DT 40-65, 75-115 HP V-4, V-6 (OEM P/N 09141-18005), Yamaha V-4 & V-6 (OEM P/N 90171-18M04-00), Honda 75-115 & FS200-225 HP (OEM P/N 90301-ZW1-B00)

SHEAR PINS

SHEAR PIN KIT



FA324101
17-820150 Shear Pin (3)18-45882 Cotter Pin
Force 4-15 HP

SHEAR PIN KIT



FK247
17-819834 Shear Pin (6)18-89961 Cotter Pin
Force 30-50 HP

PROPELLER HARDWARE AND ACCESSORIES

SHEAR PIN



17- 17554M

Mariner 3.5/4/5 HP
Priced individually, sold @ multiples of 10

SHEAR PIN



17- 81900M

Mariner 15 (651) 20 (653) 25 (648, 694)
Priced individually, sold @ multiples of 5

SHEAR PIN



18- 97028M

Mariner 30 (689B)

SHEAR PIN



17- 83443M

Mariner 40 (676A)
Priced individually, sold @ multiples of 5

SHEAR PIN



17-815111Q02

Fits the Mercury/Mariner/Force 2/2.5/3/3.3hp 2-cycle and 2/2.5/3.5hp FourStroke outboards. Visit the prop charts or parts catalogs for proper matching selections.
Priced individually, sold @ multiples of 2
Quicksilver Branded, Clamshell Package Point of Sale Packaged.

SHEAR PIN



17- 70733

Thruster (gear/direct drive)
Priced individually, sold @ multiples of 5

COTTER PINS

COTTER PIN



18- 45882

Force 4, 5, 7.5 & 15
Priced individually, sold @ multiples of 2

COTTER PIN



18- 89961

1/8" X 1-1/4"
Force 30, 40, 50

COTTER PIN



18- 82134M

Mariner 2 (6A1) 3.5 (692)
Priced individually, sold @ multiples of 2

COTTER PIN



18- 82132M

Mariner 4-75
Priced individually, sold @ multiples of 5

COTTER PIN



18-815026

Fits Mariner 9.9C (682) 15C (684), and fits Mercury/Mariner 8/9.9 hp. FourStroke standard gearcase outboards (Model Year 2005 & newer).
Priced individually, sold @ multiples of 5

COTTER PIN



18- 95295

Thruster (R, RL, RX, T series) Mariner 30 (689B)
Priced individually, sold @ multiples of 5

SPACERS

SPACER



F531299

Force 20, 25 & 60 (1973-78)

SPACER



23- 42091 1

Mariner 9.9-15 HP

PROP NUT KIT



11- 64075A 1

23-65439 Spacer
12-79552 Washer
11-61075(11-89103) Prop nut
Mercury/Mariner 200 (old 20 HP)

SPACER



23- 86918T

Mercury 650-800 (newer prop on old engine

PROPELLER HARDWARE AND ACCESSORIES

THRUST WASHER



859891
OMC 25, 30, 35 (OEM P/N 323943) Thru hub exhaust

SPACER



12-850076
Yamaha 60-250 HP, includes sterndrives
(Flo-Torq II)

SPACER



12- 29710
Cupped Washer, 40HP Big Foot - old V6
Priced individually, sold @ multiples of 3

SPACER



12- 56355
Cupped Washer, Mercury/Mariner 30-60 HP
Priced individually, sold @ multiples of 5

SPACER



12- 54738
Cupped Washer, Bravo II

SPACER



12- 55072
Cupped Washer, Bravo II

SPACER



12-F1866
Washer, Force 60, 85-150 (single exhaust)

SPACER



12-F8167
Washer, Force 85-150 (single exhaust)

WASHERS

WASHER



F697299

Force 90-150 (Dual Exhaust)

WASHER



12- 83447M

Mariner 30 (689B)

WASHER



12- 31211Q03

Fits following product with rubber hub propellers (non-Flo-Torq II): Mercury/Mariner 135-275 (V-6, 2-cycle) and Alpha, Bravo I (w/o Flo-Torq II Hub).

Priced individually, sold @ multiples of 2

Quicksilver Branded, Peg Display Card Point of Sale Packaged.

WASHER



12- 20084

Mercury 39, 60, 110 (1967 & older, 6 spline)

Priced individually, sold @ multiples of 5

WASHER



12- 27025

Mercury 39, 60, 65, 110

Priced individually, sold @ multiples of 5

WASHER



12- 16146

Fits Mercury 4 & 5HP, and fits the 8/9.9 hp. FourStroke standard gearcase outboards (Model Year 2005 & newer).

WASHER



12- 32007

Mercury 350-700

WASHER



12- 31013

Mercury 650-800 (newer prop on old engine)

Priced individually, sold @ multiples of 2

PROPELLER HARDWARE AND ACCESSORIES

WASHER



12- 39701

Bravo I

WASHER



12- 55073A 2

Bravo II

WASHER



12- 39817

For use with Mercury Racing Six Drive prop shaft.

WASHER



12-887972

Washer

Evinrude/Johnson V6 Outboards and Sterndrives 1991 and newer, Yamaha 150-300 HP 4-Stroke outboards and Honda outboards 75-225HP

Priced individually, sold @ multiples of 2

Quicksilver Branded

WASHER



859908

Suzuki DT 9.9-15 HP (OEM P/N 09160-12066)

CONTINUITY WASHER



13- 42351 1

Mercury/Mariner 135-275 V-6, Alpha, Bravo I, (w/o Flo-Torq II Hub)

Priced individually, sold @ multiples of 2

TAB WASHERS

TAB WASHER



14- 76281

Fits Mercury/Mariner 30-60 hp. (non-Bigfoot) outboard engines.

Priced individually, sold @ multiples of 5

TAB WASHER



8M0042130

For Mercury/Mariner 40-60 hp FourStroke BigFoot, 75-300 hp 2-stroke and 4-stroke outboards, Alpha and Bravo I sterndrives using a stainless steel two pin drive sleeve adapter.

TAB WASHER



14-816629Q

For Mercury/Mariner 40-60 hp FourStroke BigFoot, 75-300 hp 2-stroke and 4-stroke outboards, Alpha and Bravo I sterndrives using a bronze drive sleeve adapter.

Priced individually, sold @ multiples of 2

Quicksilver Branded, Peg Display Card Point of Sale Packaged.

TAB WASHER



14- 34817

Bravo II

THRUST WASHERS

THRUST WASHER



65091Q01

Mercury 650-1500 (1969-77)

Priced individually, sold @ multiples of 2

Quicksilver Branded, Peg Display Card Point of Sale Packaged.

THRUST WASHER



23-819058

Force 85-150 (single exhaust)

THRUST WASHER



23-819057

Force 90-120 HP (dual exhaust)

THRUST WASHER



803890T

Force 90-150 (dual exhaust)

THRUST WASHER



23- 11654M

Mariner 6 (6H8) 8 (6G1)

THRUST WASHER



73345A 1

For use with 3 blade stainless steel - Cleaver or Chopper II

Fits Mercury 40-60 Standard Gearcase. Use with rubber props only - do not use with Flo-Torq Reflex propellers.

PROPELLER HARDWARE AND ACCESSORIES

THRUST WASHER



16145Q01

Mercury 4-5 HP

Priced individually, sold @ multiples of 2

Quicksilver Branded, Peg Display Card Point of Sale Packaged.

FORWARD THRUST WASHER



8M0070881

Fits the standard prop on the Mercury/Mariner 8/9.9 hp. FourStroke standard gearcase outboards, Model Year 2005 & newer.

THRUST WASHER



821932

Mercury 6, 8, 9.9, 9.9 4-Stroke, 15 HP (full-length spine)

THRUST WASHER



821932 1

Mercury 6-15 HP (1984-Present)

THRUST WASHER



23- 85964A 1

Mercury 200 (old 20 HP)

THRUST WASHER



858498

For use with 3 blade stainless steel - Cleaver & Chopper II

Fits Mercury 20-25

THRUST WASHER



73345A 1

For use with 3 blade stainless steel - Cleaver or Chopper II

Fits Mercury 40-60 Standard Gearcase. Use with rubber props only - do not use with Flo-Torq Reflex propellers.

THRUST WASHER



38859A 1

Mercury 350-700 (old 35-75 HP)

THRUST WASHER



13191Q01

Flat type
Fits 75 - 125 hp outboards with rubber hub props
Fits 40-60 hp FourStroke BigFoot
Rubber Hub Chopper
Priced individually, sold @ multiples of 2
Quicksilver Branded, Peg Display Card Point of Sale Packaged.

THRUST WASHER



14359

Mercury/MerCruiser A50 solid hub & Power 2

THRUST WASHER



12-835467Q01

Fits the following product when used with Flo-Torq II hub propellers:
Mercury/Mariner 40-60 hp BigFoot FourStroke
Mercury/Mariner 75-125 hp 2-cycle and FourStroke
Mercury/Mariner 135-275 hp 2-cycle
Force 75 hp (1999) & 90-1150 hp (1995 and newer)
Mercury MerCruiser Alpha and Bravo I sterndrives
Evinrude/Johnson V-6 outboards 1990 and prior
OMC sterndrives V-6 & V-8 gearcases 1984-1990
Honda 75-90 hp outboards 1998 and prior
Suzuki 140 hp 4-stroke outboards

Caution should be exercised to assure the correct thrust hub is matched with the prop in use. Used with Flo-Torq II & III Delrin (plastic) hub kit propellers.
Priced individually, sold @ multiples of 2
Quicksilver Branded, Peg Display Card Point of Sale Packaged.

THRUST WASHER



12-835467 5

Front, included in steel hub kits
Mercury/MerCruiser A55 & A56 solid hub applications (Flo-Torq II)

THRUST WASHER



56292Q04

MerCruiser I (pre-1983)
Priced individually, sold @ multiples of 2
Quicksilver Branded, Clamshell Package Point of Sale Packaged.

THRUST WASHER



55074T

Bravo Two (front)

THRUST WASHER



805100

Bravo Three (front)

PROPELLER HARDWARE AND ACCESSORIES

THRUST WASHER



805101T

Bravo Three (rear)

THRUST WASHER



12-8M0046466

Adapts Mercury 30-60 HP Black Max, Trophy Sport & Vengeance propellers with Flo-Torq Reflex Hubs to fit Honda 40-50 HP engines.

THRUST WASHER



835278A 1

Adapts Mercury 30-60 HP Black Max, Trophy Sport & Vengeance Rubber Hub props to Honda 40-50 HP & Nissan/Tohatsu 40-50 HP

THRUST WASHER



12-853359

Honda 75-90 HP (1999-present), 115-130 HP (1998-present) Suzuki V-6 (Flo-Torq II Hub)

THRUST WASHER

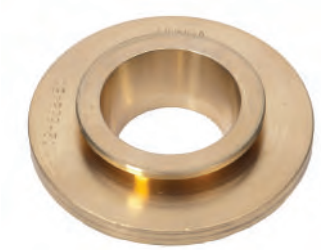

12-888451

Forward Thrust Washer
Honda 135-225 HP outboards
Quicksilver Branded

THRUST WASHER



859891

OMC 25, 30, 35 (OEM P/N 323943) Thru hub exhaust

THRUST WASHER



859915

OMC 45, 60, 70 HP V-4 (OEM P/N 127084/318841)

THRUST WASHER



12-835467 7

OMC V-6, V-8 outboard, 1991-present (Flo-Torq II)

THRUST WASHER



12-854621

Suzuki V-4 (Flo-Torq II)

THRUST WASHER



12-853948T

Tohatsu/Nissan 75-140 HP (Flo-Torq II)

THRUST WASHER



12-853555

Yamaha 60-90 HP (Flo-Torq II)

THRUST WASHER



23-8M0064826

Yamaha 200-250 SHO Adapts to Yamaha two piece thrust washer

TRIM TABS

TRIM TAB



31640Q 4

Aluminum

Fits most Mercury/Mariner outboards 35 hp. & above and all MerCruiser except Bravo. Check for adequate propeller clearance prior to operation.

Quicksilver Branded, Clamshell Package Point of Sale Packaged.

TRIM TAB ANODE



822777Q 1

Aluminum

For applications where extra clearance is required for high rake propellers.

Fits most Mercury/Mariner 35 hp and above, Force 90/120 (1995 and newer), and all Mercury MerCruiser engines.

Quicksilver Branded, Clamshell Package Point of Sale Packaged.

ANODIC PLATE



76214Q 5

Aluminum

Provides additional clearance for high rake propellers.

Fits Mercury/Mariner 35-300hp, Force 90 & 120hp 1995 and newer, MerCruiser Alpha One Gen II and Bravo I, II, III, X XR & XZ drives.

Priced individually, sold @ multiples of 2

Quicksilver Branded, Clamshell Package Point of Sale Packaged.

PROPELLER HARDWARE AND ACCESSORIES

RUBBER HUBS

RUBBER HUB



819429A 1

Rubber Hub Force 35-90HP (pre-1998)

RUBBER HUB



8M0057162

3.125 in long, 8 splines
Mariner 9.9-15 HP (Japanese origin)

RUBBER HUB



8M0054769

Rubber Hub Mercury/Mariner 9.9 BF, 15/20HP 4Stroke
9.9HP Bigfoot Model Year 2005 and Newer
15/20HP Model Year 2007 and Newer

897453T

Rubber Hub Mercury/Mariner 8-9.9 HP FourStroke
2005 and Newer

RUBBER HUB



897001T

Rubber Hub Mercury/ Mariner 25/30HP 4-Stroke
Model Year 2006 and Newer

RUBBER HUB



83872M

2-7/8" long, 8 splines
Mariner 25, 28, 30 HP (Japanese origin)

RUBBER HUB



42630 1

2-3/16" long, 8 splines
Mercury 7.5 & 9.8 HP (1968-84)

RUBBER HUB



827598T

Mercury 9.9-15 HP 2-Stroke, 9.9 HP FourStroke 1995-2004, 15 HP FourStroke (Thru 2007)

RUBBER HUB



43549

Nut on aft end of hub 3-3/4" long, 10 splines, 1-3/8" cavity size
Mercury 18-25 HP (1980-1988)

RUBBER HUB



19669T

Mercury 20-25 HP

RUBBER HUB



859173

Mercury 40-60 HP BigFoot Engines 15 Tooth Spline 60HP Maximum

RUBBER HUB



92418

Mercury 28, 28A, 200, 250 series

RUBBER HUB



32053T

2-3/4" long, 11 splines

Mercury 300, 350, 400, 450, 500 series (1962-1969)

RUBBER HUB



62999

2-3/4" long, 13 splines

Mercury 300, 350, 400, 450, 500 & 650 series (1970-1976)

RUBBER HUB



43676T

3-3/8" long, 13 splines

Mercury 402, 500, 700 series (1977-85) Mercury 30-60 HP

RUBBER HUB



17611T

Mercury 80-140 HP (1978 & later in-line motors) Stainless steel applications

RUBBER HUB



43615T 1

OB front insertion 4" long, 15 splines

Mercury 150-200 HP (1978 & later V-6) aluminum, ET, Chopper and Outboard Cleaver

PROPELLER HARDWARE AND ACCESSORIES

RUBBER HUB



43672

OB rear insertion
Mercury Stainless steel Chopper & Lightning ET propeller hub

RUBBER HUB



88437

MerCruiser 1A, 1B, 1C, 120, 140, 175, 888, 225S, 233, 255TRS & 80 TRS

RUBBER HUB



43636T

4-5/8" long, 19 splines
MerCruiser TR215, Bravo II

RUBBER HUB



859818

OMC 40, 70 (OEM P/N 386787)

RUBBER HUB



859834

Suzuki 55 (OEM P/N 58120-95300)

RUBBER HUB



859825

Yamaha 9.9, 15 (OEM P/N 683-45981-00-00)

SKEGS

REPLACEMENT SKEG



15985A02

Precision die cast 360XK alloy for stronger, more uniform welds.

Fits Mercury / Mariner 50/55/60 Bigfoot (3 cyl.), 70/75/80/90 (USA 0A996142 and Newer, BEL 9483121 and Newer), 100/115/125 (0B209468 and Newer), Force 90/120 (s/n 0E093700 and Newer) and 75/90/115 FourStroke (1B366823-2B094955).

REPLACEMENT SKEG



815632A02

For MCM Bravo One & Bravo Three drives

REPLACEMENT SKEG



859447A 1

Precision die cast 360XK alloy for stronger, more uniform welds.

Fits Mercury / Mariner 75/80 (4 cyl.), 90/115 (6 cyl.) and most V-6 outboard models including 2.5L OptiMax. Has adequate depth for the 3.0L models but is not an exact silhouette of the original skeg.

REPLACEMENT SKEG



90185A 1

Will not fit original Alpha One drives

For MCM Alpha One Gen II drives (s/n 0D469859 and above)

REPLACEMENT SKEG



898245A01

Fits Verado outboards, 135 through 300 hp. and 3.0L gearcases that have a 4.80 inch diameter torpedo.

REPLACEMENT SKEG



8M0060147

Pecision die cast 360XK alloy for stronger, more uniform welds.

Fits the Mercury/Mariner F150 hp. EFI FourStroke 4 cylinder outboard, and the F75-115 hp. (2.1L) FourStroke Command Thrust outboard serail number 2B094996 and above..

REPLACEMENT SKEG



8M0052924

Precision die cast 360XK alloy for stronger, more uniform welds.

Fits the Verado and 3.0L gearhousings with a 5.44 inch diameter torpedo.

PERFORMANCE VENT PLUGS

VENT PLUG



19220A 4

R/H Laser II props (Old style A41, A45 P/N suffix)

VENT PLUG



816318A 4

L/H Laser II props (Old Style A41, A45 P/N suffix)

VENT PLUG



19-824431

Used with Large tube Trophy (A41, A45 P/N suffix), replaces 19-32652A1 (welch plug)

Priced individually, sold @ multiples of 4

PROPELLER HARDWARE AND ACCESSORIES

VENT PLUG



19-855267A 1

Tempest (A40, A41, A45 P/N suffix)

PVS VENT FITTING



19-889725

Solid PVS plug (A46, A47, A48 P/N suffix)
Superseded from 19-856622

Priced individually, sold @ multiples of 5

PVS VENT FITTING



19-889725T28

Small PVS plug (.280/7mm) (A46, A47, A48 P/N suffix).

Priced individually, sold @ multiples of 5

PVS VENT FITTING



19-889725T35

Medium PVS plug (.350/9mm)

Priced individually, sold @ multiples of 5

PVS VENT FITTING



19-889725047

Large PVS plug (.470/12mm)(A46, A47, A48 P/N suffix)
Superseded from 19-856622 47

Priced individually, sold @ multiples of 5

STAINLESS STEEL IMPELLERS

OUTBOARD JET IMPELLER



47-855708T25

Mercury/Mariner 20/25 HP

OUTBOARD JET IMPELLER



47-855708T40

Mercury/Mariner 30/40 HP (3 cyl)
Force 50 HPS
OMC 40 HP
Yamaha (3 cyl) 40 HP
Suzuki (2 cyl) 40 HP
Tohatsu/Nissan (3 cyl) 40/50 HP

OUTBOARD JET IMPELLER



47-855708T60

Mercury/Mariner 45/60 HP
OMC 50/70 HP
Yamaha 48
Suzuki 65 HP

OUTBOARD JET IMPELLER



47-855708115

Mercury/Mariner 65/90 HP
Mercury/Mariner 80/115 HP
OMC 110/140 HP
Suzuki 115/140 HP

OUTBOARD JET IMPELLER



47-803984T

Mercury/Mariner 105/150 HP

OUTBOARD JET IMPELLER



47-803985T

Mercury/Mariner 140/200 HP

SPORTJET IMPELLER



47-828989T 1

90 jet (splined) 1993-1995
95 XR jet 1996-1997
120 jet 1995
120 XR jet 1996-1998

SPORTJET IMPELLER



47-854670T

120 XR2 jet 1999-2000

SPORTJET IMPELLER



47-835452T

175 XR2 jet 1997-2000

SPORTJET IMPELLER



47-877326T

M2 jet drive 210 carb model 2000
M2 jet drive 240 EFI model 2000

PROPELLER HARDWARE AND ACCESSORIES

SPORTJET IMPELLER



47-883796T01

High skew impeller developed to provide improved holding or reduced cavitation during acceleration and in turns. This impeller will produce an additional 75 RPM's on top end in most cases. When used in the 250 application the REV limiter may be activated more often than with the standard 4 blade impeller.

Fits the 175, 200, 210, 240 & 250 Jet Drive.

TOOLS

PLUG WRENCH/SCREW TOOL



91-8M0026088

PROP WRENCH



91-805457T 1

For removal/installation of Bravo Three inner Prop Nut

PROP SLIP CALCULATOR

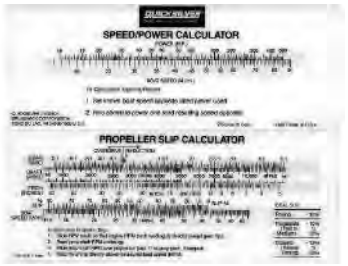

90- 86147A 1

FLOATING PROP WRENCH



91-859046M 1

Fits 9/16" Nut (Purple) Fits Mercury/Mariner 6,8,9.9 & 15 HP.
Mercury Branded, Peg Display Product Point of Sale Packaged.

91-859046Q 1

Fits 9/16" Nut, Purple (Mercury / Mariner 6,8,9.9 &15 HP)
Quicksilver Branded, Peg Display Product Point of Sale Packaged.

FLOATING PROP WRENCH



91-859046M 2

Fits 13/16" Nut (Green) Fits Mercury/Mariner 20, 25 HP Johnson/Evinrude 9.9,15,20,30 HP.
Mercury Branded, Peg Display Product Point of Sale Packaged.

91-859046Q 2

Fits 13/16" Nut, Green (Mercury / Mariner 20 & 25 HP) (Johnson / Evinrude 9.9,15,20 & 30 HP)
Quicksilver Branded, Peg Display Product Point of Sale Packaged.

FLOATING PROP WRENCH



91-859046M 3

Fits 15/16" Nut (Orange) Fits Mercury/Mariner 30,40,50&60 HP.
Mercury Branded, Peg Display Product Point of Sale Packaged.

91-859046Q 3

Fits 15/16" Nut Orange (Mercury / Mariner 30,40,50 & 60 HP)
Quicksilver Branded, Peg Display Product Point of Sale Packaged.

FLOATING PROP WRENCH



91-859046M 4

Fits 1-1/16" Nut (Yellow) Fits MOST sterndrives and V4/V6 Outboards. Mercury Branded, Peg Display Product Point of Sale Packaged.

91-859046Q 4

Fits 1-1/16" Nut, Yellow (Fits most sterndrives / 4 cylinder & larger outboards) Quicksilver Branded, Peg Display Product Point of Sale Packaged.

PROP STOW-LARGE



93-824423 2

MERCURY RACING PROPELLER ACCESSORIES

PROP STOW



847314A 1

4 in.(102 mm) hub, for use with Mirage, Laser II, Bravo I, Maximus etc.

PROP STOW



845263A 1

6 in.(152 mm) hub, for use with 15 inch to 18 inch sterndrive Clever propellers

PROP COVER



849505 1

Fits up to 11 in.(279 mm) diameter prop - not lined

849492T01

Fits up to 15 in.(381 mm) diameter prop - not lined

849493T01

Fits up to 18 in.(457 mm) diameter prop - not lined

RACING CNC PROP COVER



8M0069320

New for 2012 is this heavy duty Cleaver prop case featuring an adjustable carrying strap, draw sting closure for one person in and out ease, eye loops for your bungee cords to go around drive, padded tear resistant material on the inside to protect propeller tips, folding flap keeping the hub grease on the hub and easy cleanable exterior featuring the Mercury Racing logo. Fits 5 and 6 blade Cleavers up to 18 inch diameter.

For use with 5 blade and 6 blade Cleaver propellers.

PROPELLER HARDWARE AND ACCESSORIES

MARINE GREASE

Mercury 2-4-C Marine Grease with PTFE is a high quality, extremely versatile lithium-based, NLGI 2 grease that won't break down when mixed with water. It also has:
• Excellent resistance to oxidation and degradation
• Extreme pressure additives to withstand friction in a wide variety of operations and temperatures
Replaces Quicksilver Special 101 Lubricant part number 92-802865Q02

For use in the following marine applications:
• Steering systems/cable linkages
• Throttle and shift cables and linkages
• Remote controls
• Prop shafts
• Swivel pins
• Tilt lock mechanisms/tilt tube
• Hinge pins
• Boat trailer wheel bearings

2-4-C MARINE LUBRICANT WITH PTFE



92-802861A 1
Priced individually, sold @ multiples of 10
85 g (3 oz) 3-pack Cartridges
Mercury Branded, Clamshell Package Point of Sale Packaged.

2-4-C MARINE LUBRICANT WITH PTFE AND GREASE GUN



91- 74057K 5
Cartridge gun and one 3 oz.(85 g) cartridge.
Priced individually, sold @ multiples of 4
Mercury Branded, Clamshell Package Point of Sale Packaged.

2-4-C MARINE LUBRICANT WITH PTFE



92-802859A 1
Priced individually, sold @ multiples of 12
227 g (8 oz) tube
Mercury Branded

2-4-C MARINE LUBRICANT WITH PTFE



92-802863A 1
Priced individually, sold @ multiples of 4
397 g (14 oz) cartridge
Mercury Branded

PAINTS

PHANTOM BLACK PAINT



92-802878 1
For all Mercury outboards and MCM/MIE engines and drives.
Priced individually, sold @ multiples of 6
340 g (12 oz) spray can
Mercury Branded

EDP PROPELLER BLACK PAINT



92-802878 50
Priced individually, sold @ multiples of 6
340 g (12 oz) spray can
Mercury Branded

Notes:

TABLE OF CONTENTS

Mercury Inflatable Boats 1036

Air Deck Series 1038
Dinghy Series 1036
Dynamic Series 1040
Heavy Duty Series 1039
M Series 1043
Ocean Runner Series 1041
Roll-Up Series 1036
Sport Series 1036

Inflatable Accessories 1044

1-Part PVC Glue 1052
2-Part Adhesive 1052
Air Deck Floor Systems 1047
Air Pumps 1055
Aluminum Seats 1045
AquaSeal 1054
AquaSeal Combo Pack 1054
Boat Covers 1044
Bow Dodger/ Bag Kit 1049
Combination D-Ring and Lifting Handle 1050
Duratex (PVC) - Boat Handles 1049
Fiberglass (FRP) Seats 1045
Fuel Tank Hold Down Kit 1055
Halkey-Roberts Valves 1055
Heavy-Duty Side Joiners 1048
Hypalon - Boat Handles 1049
Hypalon Repair Kit 1052
Lacing Cuffs 1044
M.E.K. Patching Solvent and Cleaner 1052
Molded D-Rings 1050
Plastic Registration Panels 1055
Pressure Gauge 1056
PVC Fabric 1054
PVC Repair Kits 1053
Quicksilver Valve 1056
Seam Grip 1054
Seat Cushions 1046
Seat Webbing 1051
Stainless Steel D-Rings 1050
Under-Seat Storage Bag 1049
Valve Fill Adapters 1056
Valve Tool 1056
Wood Seats 1046

Oars and Paddles 1058

MERCURY INFLATABLE BOATS

For over 65 years Mercury Marine has maintained the standard of excellence in marine products. As the second-largest inflatable boat company in the world, Mercury Inflatables continues this commitment to quality by building durability, value and the Mercury reputation into every model.

Mercury Inflatables are available in both PVC and Hypalon and feature reinforced-seam construction, fabric with a tight-weave non-stretch polyester core and stainless steel hardware. Whatever your boating needs, Mercury Inflatables offer lightweight portability, reassuring stability, quick setup and easy operation in a full range of styles and sizes.

So whether you are exploring a new coastline, diving in the Caribbean, or just need a dingy Mercury Inflatables has a boat to meet your needs.

DINGHY SERIES

DINGHY 200 - LIGHT GREY



A-AA200046M

Type of Floor: Air Mattres
Color: Light Grey
Fabric: PVC

Bagged Dimensions SKIN: (cm)100 x 56 x 26
Max Load: (lbs)562 (kg)255
Max HP (all short shaft): 3.3
Max Engine weight: (lbs)44 (kg)20
Max Persons: 2
Numbers of air chambers: 2+keel+floor
Length: (ft) 6 ft 7 in (cm)200
Width: (ft) 4 ft 1 in (cm)125
Weight: (lbs)41 (kg)19

Mercury Branded

DINGHY 240 - LIGHT GREY

A-AA240128M

Type of Floor: Air Mattres
Color: Light Grey
Fabric: PVC

Bagged Dimensions SKIN: 100 x 56 x 26
Max Load: (lbs)694 (kg)315
Max HP (all short shaft): 3.5
Max Engine weight: (lbs)44 (kg)20
Max Persons: 3
Numbers of air chambers: 2+keel+floor
Length: (ft)7 ft 10.5 in (cm)240
Width: (ft)4 ft 4 in (cm)132
Weight: (lbs)49 (kg)22

Mercury Branded

270 DINGHY PVC

A-AA270128M

Type of Floor: Air Deck

Bagged Dimensions (cm) SKIN: 100 x 56 x 26
Max Load (lbs): 783
Max HP (all short shaft): 5
Max Engine weight (lbs): 66
Max Persons: 3
Numbers of air chambers: 2+keel+floor
Length (ft): 8 ft 10 in
Width (ft): 4 ft 4 in
Weight (lbs):55

Mercury Branded

ROLL-UP SERIES

220/240 ROLL-UP - LIGHT GREY



A-AA240129M

Type of Floor: Slated Floor
Color: Light Grey
Fabric: PVC

Bagged Dimensions (cm) SKIN: 100 x 56 x 26
Max Load (lbs): 694
Max HP (all short shaft): 4
Max Engine weight (lbs): 66
Max Persons: 3
Numbers of air chambers: 2
Length (ft): 7 ft 3 in
Width (ft): 4 ft 7 in
Weight (lbs):49

Mercury Branded

SPORT SERIES

220/240 SPORT - LIGHT GREY



A-AA240133M

Type of Floor: FRP- Fiberglass Reinforced Polymer
Color: Light Grey
Fabric: PVC

Bagged Dimensions SKIN: (cm)102 x 56 x 30
Max Load: (lbs)860 (kg)390
Max HP (all short shaft): 4
Max Engine weight: (lbs) 66 (kg)30
Max Persons: 3
Numbers of air chambers: 3+keel
Length: (ft) 7 ft 3 in (cm)220
Width: (ft) 5 ft 1 in (cm)154
Weight: (lbs)97 (kg)44

Mercury Branded

250/270 SPORT -LIGHT GREY

A-AA270132M

Type of Floor: FRP- Fiberglass Reinforced Polymer
Color: Light Grey
Fabric: PVC

Bagged Dimensions SKIN: (cm)102 x 56 x 35
Max Load: (lbs)992 (kg)450
Max HP (all short shaft): 8
Max Engine weight: (lbs)88 (kg)40
Max Persons: 4
Numbers of air chambers: 3+keel
Length: (ft)8 ft 4in (cm)253
Width: (ft)5 ft 1 in (cm)154
Weight: (lbs)111 (kg)50

Mercury Branded

290/310 SPORT - LIGHT GREY



A-AA310127M

Type of Floor: Wood
Color: Light Grey
Fabric: PVC

Bagged Dimensions SKIN: (cm)102 x 56 x 40
Max Load: (lbs)1146 (kg)520
Max HP (all short shaft): 15
Max Engine weight: (lbs)132 (kg)60
Max Persons: 4
Numbers of air chambers: 3+keel
Length: (ft) 9 ft 6 in (cm)290
Width: (ft) 5 ft 1 in (cm)154
Weight: (lbs)121 (kg)55

Mercury Branded

320/340 SPORT - LIGHT GREY



A-AA340135M

Type of Floor: FRP- Fiberglass Reinforced Polymer
Color: Light Grey
Fabric: PVC

Bagged Dimensions SKIN: (cm)102 x 56 x 46
Max Load: (lbs)1257 (kg)570
Max HP (all short shaft): 20
Max Engine weight: (lbs)132 (kg)60
Max Persons: 5
Numbers of air chambers: 3+keel
Length: (ft)10ft 6 in (cm)320
Width: (ft)5 ft 1 in (cm)154
Weight: (lbs)133 (kg)61

Mercury Branded

250/270 ADVENTURE SPORT - DARK GREEN



A-AA270133M

Type of Floor: FRP- Fiberglass Reinforced Polymer
Color: Dark Green
Fabric: PVC

Bagged Dimensions SKIN: 102 x 56 x 35(cm)
Max Load: (lbs)992 (kg)450
Max HP (all short shaft): 8
Max Engine weight: (lbs)99
Max Persons: 4
Numbers of air chambers: 3+keel
Length: (ft)8 ft 4in (cm)253
Width: (ft)5 ft 1 in (cm)154
Weight: (lbs)111 (kg)50

Mercury Branded

290/310 ADVENTURE SPORT - DARK GREEN

A-AA310128M

Type of Floor: FRP- Fiberglass Reinforced Polymer
Color:Dark Green
Fabric: PVC

Bagged Dimensions SKIN: 102 x 56 x 40(cm)
Max Load: (lbs)1146 (kg)520
Max HP (all short shaft): 15
Max Engine weight: (lbs)132 (kg)60
Max Persons: 4
Numbers of air chambers: 3+keel
Length: (ft)9 ft 6 in)cm)290
Width: (ft)5 ft 1 in (cm)154
Weight: (lbs)122 (kg)55

Mercury Branded

320/340 ADVENTURE SPORT - DARK GREEN

A-AA340136M

Type of Floor: FRP- Fiberglass Reinforced Polymer
Color: Dark Green
Fabric: PVC

Bagged Dimensions SKIN: 102 x 56 x 46(cm)
Max Load: (lbs)1257 (kg)570
Max HP (all short shaft): 20
Max Engine weight: (lbs)132 (kg)60
Max Persons: 5
Numbers of air chambers: 3+keel
Length: (ft)10 ft 6 in)cm)320
Width: (ft)5 ft 1 in (cm)154
Weight: (lbs)133 (kg)61

Mercury Branded

AIR DECK SERIES

220/240 AIR DECK PVC - LIGHT GREY



A-AA240130M

Type of Floor: High Pressure Air floor
Color: Light Grey
Fabric: PVC

Bagged Dimensions (cm) SKIN: 102 x 56 x 30
Max Load (lbs): 1058 (kg) 480
Max HP (all short shaft): 4
Max Engine weight (lbs): 66 (kg)30
Max Persons: 3
Numbers of air chambers: 3+keel+floor
Length (ft): 7 ft 3 in (cm)220
Width (ft): 5 ft 1 in (cm) 154
Weight (lbs):79 (kg) 36

Mercury Branded

250/270 AIR DECK PVC -LIGHT GREY

A-AA270129M

Type of Floor: High Pressure Air floor
Color: Light Grey
Fabric: PVC

Bagged Dimensions (cm) SKIN: 102 x 56 x 35
Max Load (lbs): 1202 (kg) 545
Max HP (all short shaft): 8
Max Engine weight (lbs): 88 (kg) 40
Max Persons: 4
Numbers of air chambers: 3+keel+floor
Length (ft): 8 ft 4 in (cm) 250
Width (ft): 5 ft 1 in (cm) 154
Weight (lbs):95 (kg) 43

Mercury Branded

290/310 AIR DECK PVC - LIGHT GREY



A-AA310124M

Type of Floor: High Pressure Air floor
Color: Light Grey
Fabric: PVC

Bagged Dimensions (cm) SKIN: 102 x 56 x 40
Max Load (lbs): 1400 (kg) 635
Max HP (all short shaft): 15
Max Engine weight (lbs): 132
(kg) 60Max Persons: 4
Numbers of air chambers: 3+keel+floor
Length (ft): 9 ft 6 in
(cm) 290 Width (ft): 5 ft 1 in (cm) 154
Weight (lbs):92 (kg) 42

Mercury Branded

320/340 AIR DECK PVC - LIGHT GREY

A-AA340132M

Type of Floor: High Pressure Air floor
Color: Light Grey
Fabric: PVC

Bagged Dimensions (cm) SKIN: 102 x 56 x 46
Max Load (lbs): 1477
(kg) 670 Max HP (all short shaft): 20
Max Engine weight (lbs): 132
(kg) 60 Max Persons: 5
Numbers of air chambers: 3+keel+floor
Length (ft): 10 ft 6 in (cm) 320
Width (ft): 5 ft 1 in (cm) 154
Weight (lbs):99 (kg) 45

Mercury Branded

220/240 AIR DECK HP -WHITE



A-AA240131M

Type of Floor: High Pressure Air floor
Color: White
Fabric: PVC

Bagged Dimensions (cm) SKIN: 102 x 56 x 30
Max Load (lbs): 1058 (kg) 480
Max HP (all short shaft): 4
Max Engine weight (lbs): 66 (kg) 30
Max Persons: 3
Numbers of air chambers: 3+keel+floor
Length (ft): 7 ft 3 in (cm) 220
Width (ft): 5 ft 1 in (cm) 154
Weight (lbs):80 (kg) 36

Mercury Branded

250/270 AIR DECK HP -WHITE

A-AA270130M

Type of Floor: High Pressure Air floor
Color: White
Fabric: PVC

Bagged Dimensions (cm) SKIN: 102 x 56 x 35
Max Load (lbs): 1202 (kg) 545
Max HP (all short shaft): 8
Max Engine weight (lbs): 88 (kg) 40
Max Persons: 4
Numbers of air chambers: 3+keel+floor
Length (ft): 8 ft 4 in (cm) 250
Width (ft): 5 ft 1 in (cm) 154
Weight (lbs):95 (kg) 43

Mercury Branded

290/310 AIR DECK HP -WHITE



A-AA310125M

Type of Floor: High Pressure Air floor
Color: White
Fabric: PVC

Bagged Dimensions (cm) SKIN: 102 x 56 x 40
Max Load (lbs): 1400 (kg) 635
Max HP (all short shaft): 15
Max Engine weight (lbs): 132 (kg) 60
Max Persons: 4
Numbers of air chambers: 3+keel+floor
Length (ft): 9 ft 6 in (cm) 290
Width (ft): 5 ft 1 in (cm) 154
Weight (lbs):103 (kg) 47

Mercury Branded

320/340 AIR DECK HP -WHITE

A-AA340133M

Type of Floor: High Pressure Air floor
Color: White
Fabric: PVC

Bagged Dimensions (cm) SKIN: 102 x 56 x 46
Max Load (lbs): 1477 (kg) 670
Max HP (all short shaft): 20
Max Engine weight (lbs): 132 (kg) 60
Max Persons: 5
Numbers of air chambers: 3+keel+floor
Length (ft): 10 ft 6 in (cm) 320
Width (ft): 5 ft 1 in (cm) 154
Weight (lbs):111 (kg) 50

Mercury Branded

HEAVY DUTY SERIES

365/380 HEAVY DUTY - RED



A-AA380107M

Type of Floor: Aluminum & FRP non-skid
Color: Red
Fabric: PVC

Bagged Dimensions SKIN:(cm)128 x 62 x 35
Bagged Floor:(cm) 108 x 64 x 12
Max Load: (lbs)1653 (kg)750
Max HP (all short shaft): 25
Max Engine weight: (lbs)187 (kg)85
Max Persons: 6
Numbers of air chambers: 3+keel
Length: (ft) 12 ft 0 in (cm)365
Width: (ft) 5 ft 9 in (cm)175
Weight: (lbs)233 (kg) 105

Mercury Branded

415/430 HEAVY DUTY - RED

A-AA430090M

Type of Floor: Aluminum & FRP non-skid
Color: Red
Fabric: PVC

Bagged Dimensions SKIN: (cm)145 x 65 x 38
Bagged Floor: (cm)113 x 75 x 12
Max Load: (lbs)2094 (kg)950
Max HP (all short shaft): 30
Max Engine weight: (lbs)187 (kg)85
Max Persons: 8
Numbers of air chambers: 3+keel
Length: (ft)13 ft 7 in (cm)415
Width: (ft)6 ft 2 in (cm)188
Weight: (lbs)282 (kg)128

Mercury Branded

470 HEAVY DUTY - RED

A-AA470033M

Type of Floor: Aluminum & FRP non-skid
Color: Red
Fabric: PVC

Bagged Dimensions SKIN: 156 x 75 x 45(cm)
Bagged Floor: 126 x 71 x 20(cm)
Max Load: (lbs)2646 (kg)1200
Max HP (all short shaft): 55
Max Engine weight: (lbs)287 (kg)130
Max Persons: 10
Numbers of air chambers: 5+keel
Length (ft): 15 ft 5 in (cm)470
Width: (ft)7 ft 1 in (cm)216
Weight: (lbs)366 (kg)166

Mercury Branded

365/380 HEAVY DUTY HP -RED



A-AA380108M

Type of Floor: Aluminum & FRP non-skid
Color: Red

Bagged Dimensions (cm) SKIN: 128 x 62 x 35
Bagged Floor:(cm) 108 x 64 x 12
Max Load (lbs): 1653 (kg) 750
Max HP (all short shaft): 25
Max Engine weight (lbs): 187 (kg) 85
Max Persons: 6
Numbers of air chambers: 3+keel
Length (ft): 12 ft 0 in (cm) 365
Width (ft): 5 ft 9 in (cm) 175
Weight (lbs):233 (kg) 105

Mercury Branded

415/430 HEAVY DUTY HP -RED

A-AA430091M

Type of Floor: Aluminum & FRP non-skid
Color: Red

Bagged Dimensions (cm) SKIN: 145 x 65 x 38
Bagged Floor: (cm)113 x 75 x 12
Max Load (lbs): 2094 (kg) 950
Max HP (all short shaft): 30
Max Engine weight (lbs): 187 (kg) 85
Max Persons: 8
Numbers of air chambers: 3+keel
Length (ft): 13 ft 7 in
(cm) 415 Width (ft): 6 ft 2 in (cm) 188
Weight (lbs):279 (kg) 126

Mercury Branded

470 HEAVY DUTY HP -RED



A-AA470034M

Type of Floor: Aluminum & FRP non-skid
Color: Red
Fabric: HP

Bagged Dimensions (cm) SKIN: 156 x 75 x 45

Bagged Floor: 126 x 71 x 20(cm) Max Load (lbs): 2646
(kg) 1200 Max HP (all short shaft): 55
Max Engine weight (lbs): 287 (kg) 130
Max Persons: 10
Numbers of air chambers: 3+keel
Length (ft): 15 ft 5 in
(cm) 470 Width (ft): 7 ft 1 in (cm) 216
Weight (lbs):363 (kg) 165

Mercury Branded

515/530 HEAVY DUTY HP -RED

A-AA530030M

Type of Floor: Aluminum & FRP non-skid
Color: Red

Bagged Dimensions SKIN: 156 x 75 x 45 (cm)
Bagged Floor: 126 x 71 x 20(cm)
Max Load (lbs): 3307
(kg) 1500 Max HP: 50
Max Engine weight (lbs): 287 (kg) 130
Max Persons: 12
Numbers of air chambers: 5+keel
Length (ft): 16 ft 11 in (cm) 515
Width (ft): 7 ft 3 in (cm) 220
Weight (lbs):401 (kg) 182

Mercury Branded

DYNAMIC SERIES

250/260 DYNAMIC PVC -LIGHT GREY



A-AA260046M

Type of Floor: Non-skid fiberglass
Color: Light Grey
Fabric: PVC

Bagged Dimensions (cm) SKIN: 215 x 96 x 45
Max Load (lbs): 750 (kg) 340
Max HP (all short shaft): 5
Max Engine weight (lbs): 66 (kg) 30
Max Persons: 3
Numbers of air chambers: 3
Length (ft): 8 ft 2 in (cm) 250
Width (ft): 4 ft 9 in (cm) 145
Weight (lbs):74 (kg) 33

Mercury Branded

270/280 DYNAMIC PVC -LIGHT GREY



A-AA280042M

Type of Floor: Non-skid fiberglass
Color: Light Grey
Fabric: PVC

Bagged Dimensions (cm) SKIN: 215 x 96 x 45
Max Load (lbs): 805
(kg) 365 Max HP (all short shaft): 8
Max Engine weight (lbs): 88 (kg) 40
Max Persons: 4
Numbers of air chambers: 3
Length (ft): 8 ft 10 in (cm) 270
Width (ft): 4 ft 8 in (cm) 145
Weight (lbs):82 (kg) 37

Mercury Branded

300/310 DYNAMIC PVC -LIGHT GREY

A-AA310129M

Type of Floor: Non-skid fiberglass
Color: Light Grey
Fabric: PVC

Bagged Dimensions (cm) SKIN: 240 x 112 x 45
Max Load (lbs): 1003 (kg) 455
Max HP (all short shaft): 15
Max Engine weight (lbs): 132 (kg) 60
Max Persons: 4
Numbers of air chambers: 3
Length (ft): 9 ft 10 in (cm) 300
Width (ft): 5 ft 3 in (cm) 160
Weight (lbs):110 (kg) 50

Mercury Branded

250/260 DYNAMIC HP -WHITE



A-AA260047M

Type of Floor: Non-skid fiberglass
Color: White

Bagged Dimensions (cm) SKIN: 215 x 96 x 45
Max Load (lbs): 750
(kg) 340 Max HP (all short shaft): 5
Max Engine weight (lbs): 66 (kg) 30
Max Persons: 3
Numbers of air chambers: 3
Length (ft): 8 ft 2 in (cm) 250
Width (ft): 4 ft 9 in (cm) 145
Weight (lbs):79 (kg) 36

Mercury Branded

270/280 DYNAMIC HP -WHITE



A-AA280043M

Type of Floor: Non-skid fiberglass
Color: White

Bagged Dimensions (cm) SKIN: 215 x 96 x 45
Max Load (lbs): 805 (kg) 365
Max HP (all short shaft): 8
Max Engine weight (lbs): 88 (kg) 40
Max Persons: 4
Numbers of air chambers: 3
Length (ft): 8 ft 10 in (cm) 270
Width (ft): 4 ft 9 in (cm) 145
Weight (lbs):89 (kg) 40

Mercury Branded

300/310 DYNAMIC HP -WHITE



A-AA310130M

Type of Floor: Non-skid fiberglass
Color: White

Bagged Dimensions (cm) SKIN: 240 x 112 x 45
Max Load (lbs): 1003 (kg) 455
Max HP (all short shaft): 15
Max Engine weight (lbs): 132 (kg) 60
Max Persons: 4
Numbers of air chambers: 3
Length (ft): 9 ft 10 in (cm) 300
Width (ft): 5 ft 3 in (cm) 162
Weight (lbs):114(kg) 52

Mercury Branded

OCEAN RUNNER SERIES

290/300 OCEAN RUNNER RIB PVC- LIGHT GREY



A-AA300054M

Type of Floor: Non-skid fiberglass
Color: Light Grey
Fabric: PVC

Bagged Dimensions SKIN: 245 x 115 x 50(cm)
Max Load: (lbs)926 (kg)420
Max HP (all short shaft): 15
Max Engine weight: (lbs)132 (kg)60
Max Persons: 4
Numbers of air chambers: 3
Length: (ft)9 ft 6 in (cm)290
Width: (ft)5 ft 4 in (cm)162
Weight: (lbs)140 (kg)64

Mercury Branded

340/350 OCEAN RUNNER RIB HP -WHITE



A-AA350053M

Type of Floor: Non-skid fiberglass
Color: White

Bagged Dimensions (cm) SKIN: 270 x 120 x 50
Max Load (lbs): 1135 (kg) 515
Max HP (all short shaft): 25
Max Engine weight (lbs): 187 (kg) 85
Max Persons: 4
Numbers of air chambers: 3
Length (ft): 11 ft 2 in (cm) 340
Width (ft): 5 ft 9 in (cm) 176
Weight (lbs):201 (kg) 91

Mercury Branded

420/430 OCEAN RUNNER RIB PVC- LIGHT GREY



A-AA430092M

Type of Floor: Non-skid fiberglass
Color: Light Grey
Fabric: PVC

Bagged Dimensions SKIN: 360 x 122 x 68(cm)
Max Load: (lbs)1764 (kg)800
Max HP: 40
Max Engine weight: (lbs)243 (kg)110
Max Persons: 8
Numbers of air chambers: 4
Length: (ft)13 ft 9 in (cm)420
Width: (ft)6 ft 4 in (cm)192
Weight: (lbs)261 (kg)118

Mercury Branded

460 OCEAN RUNNER RIB PVC- LIGHT GREY



A-AA460007M

Type of Floor: Non-skid fiberglass
Color: Light Grey
Fabric: PVC

Bagged Dimensions SKIN: 360 x 122 x 68(cm)
Max Load: (lbs)1764 (kg)800
Max HP: 40
Max Engine weight: (lbs)243 (kg)110
Max Persons: 7
Numbers of air chambers: 4
Length: (ft)13 ft 9 in (cm)420
Width: (ft)5 ft 11 in (cm)180
Weight: (lbs)250 (kg)113

Mercury Branded

290/300 OCEAN RUNNER RIB HP -WHITE



A-AA300055M

Type of Floor: Non-skid fiberglass
Color: White

Bagged Dimensions (cm) SKIN: 245 x 115 x 50
Max Load (lbs): 926
(kg) 420 Max HP (all short shaft): 15
Max Engine weight (lbs): 132 (kg) 60
Max Persons: 4
Numbers of air chambers: 3
Length (ft): 9 ft 6 in (cm) 290
Width (ft): 5 ft 4 in (cm) 162
Weight (lbs):146 (kg) 66

Mercury Branded

340/350 OCEAN RUNNER RIB HP -WHITE

A-AA350054M

Type of Floor: Non-skid fiberglass
Color: White

Bagged Dimensions (cm) SKIN: 270 x 120 x 50
Max Load (lbs): 1135 (kg) 515
Max HP (all short shaft): 25
Max Engine weight (lbs): 187 (kg) 85
Max Persons: 4
Numbers of air chambers: 3
Length (ft): 11 ft 2 in (cm) 340
Width (ft): 5 ft 9 in (cm) 176
Weight (lbs):201 (kg) 91

Mercury Branded

420/430 OCEAN RUNNER RIB HP -WHITE



A-AA430093M

Type of Floor: Non-skid fiberglass
Color: White

Bagged Dimensions (cm) SKIN: 360 x 122 x 68
Max Load (lbs): 1764 (kg) 800
Max HP: 40
Max Engine weight (lbs): 243 (kg) 110
Max Persons: 8
Numbers of air chambers: 3
Length (ft): 13 ft 9 in (cm) 420
Width (ft): 6 ft 4 in (cm) 192
Weight (lbs):268 (kg) 122

Mercury Branded

460 OCEAN RUNNER RIB HP -WHITE



A-AA460008M

Type of Floor: Non-skid fiberglass
Color: White

Bagged Dimensions (cm) SKIN: 390 x 122 x 68
Max Load (lbs): 1984 (kg) 900
Max HP: 60
Max Engine weight (lbs): 287 (kg) 130
Max Persons: 9
Numbers of air chambers: 4
Length (ft): 15 ft 2 in (cm) 460
Width (ft): 6 ft 6 in (cm) 198
Weight (lbs):291 (kg) 132

Mercury Branded

M SERIES

The M Series, an ideal yacht tender, features a new hull design including a deeper vee, lifting strakes and a change in the aft-hull geometry for enhanced performance. Not only does the redesigned M Series fiberglass hull come with a market leading five-year limited warranty, but it is also made in the USA. To see images please visit www.mercurymarine.com

M350 M SERIES LUXURY RIB HP -WHITE

Image not Available.

1-AA350055M

Package includes a 40 hp ELPT 4-Stroke Engine
Type of Floor: Non-skid fiberglass
Color: White

Max Load (lbs): 776 (kg) 352
Max HP: 40
Max Engine weight (lbs): 243 (kg) 110
Max Persons: 4
Numbers of air chambers: 3
Length (ft): 11 ft 5 in (cm) 350
Width (ft): 6 ft (cm) 180
Weight (lbs):675 (kg) 306
Mercury Branded

M400 M SERIES LUXURY RIB HP -WHITE

A-AA400056M

Package includes a 50 hp ELPT 4-Stroke Engine
Type of Floor: Non-skid fiberglass
Color: White

Max Load (lbs): 1256 (kg) 579
Max HP: 50
Max Engine weight (lbs): 287 (kg) 130
Max Persons: 5
Numbers of air chambers: 3
Length (ft): 13 ft 0 in (cm) 400
Width (ft): 6 ft 2 in (cm) 190
Weight (lbs):775 (kg) 352
Mercury Branded

M570 M SERIES LUXURY RIB HP -WHITE

A-AA570055M

Package includes a 115 hp ELPT 4-Stroke Engine
Type of Floor: Non-skid fiberglass
Color: White

Max Load (lbs): 3190 (kg) 1447
Max HP: 115
Max Engine weight (lbs): 462 (kg) 210
Max Persons: 15
Numbers of air chambers: 5
Length (ft): 18 ft 4 in (cm) 570
Width (ft): 7 ft 10 in (cm) 238
Weight (lbs):1285 (kg) 583
Mercury Branded

M620 M SERIES LUXURY RIB HP -WHITE

A-AA620057M

Package includes a 150 hp ELPT 4-Stroke Engine
Type of Floor: Non-skid fiberglass
Color: White

Max Load (lbs): 4070 (kg) 1846
Max HP: 150
Max Engine weight (lbs): (kg) 130
Max Persons: 17
Numbers of air chambers: 5
Length (ft): 20 ft 2 in (cm) 620
Width (ft): 8 ft 2 in (cm) 249
Weight (lbs): 1654 (kg) 750
Mercury Branded

INFLATABLE ACCESSORIES

BOAT COVERS

This convenient, affordable gray boat cover is made of 1.9 oz. Rip-stop nylon with UV inhibitors and a water-repellent ZEPEL finish. Protects your inflatable from sun, rain and debris. Also fits over attached engine. Elastic band sewn in bottom edge for snug fit. Shock-corded, the cover rolls compactly for easy storage. Order appropriate size.

BOAT COVER

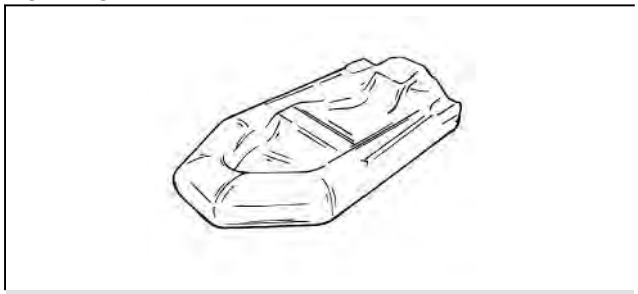

62-899772

Dimension: L2.9m x W2.3m with 0.35mm fabric; with M logo in light Gray and with dry bag (small).

Fits Mercury 200 Dinghy

62-899773

Dimension: L3.1m x W2.3m with 0.35mm fabric; with M logo in Light Gray and with dry bag(small).

Fits the following models:
Mercury 220 Sport / 220 Air Deck / 220 Ultra Light
Mercury 240 Roll-Up
Quicksilver 240 /Air Deck Ultra Light /240 Dinghy /240 Sport Enduro

62-899775

Dimension: L3.5m x W2.5m with 0.35mm fabric; with M logo in Light Gray and with dry bag(small).

Fits the following models:
Mercury Ultra Light 220, Air Deck 220, Sport 220

Mercury 240 Air Deck, 240 Sport
Quicksilver 240 Airdeck Deluxe

62-899776

Dimension: L3.8m x W2.6m with 0.35mm fabric; with M logo in Light Gray and with dry bag(small).

Fits the following models:

*Mercury Mercury Ultra Light 250, Air Deck 250/270, Sport 250/270, Adventure 250, Dynamic 250 & 270
*Quicksilver 250 Airdeck Ulta Light, 270 Airdeck Deluxe, 270 Sport Enduro and 270 Adventure Enduro
*Quicksilver Ultra Light 250, Air Deck 240 & 270, Sport 240 & 270, Adventure 270

62-899777

Dimension: L4.1m x W2.6m with 0.35mm fabric; with M logo in Light Gray and with dry bag(medium).

Fits the following models:
*Mercury Air Deck 290/310, Air Deck Fish 290, Sport 290/310, Adventure 290, Dynamic 250 & 270

*Quicksilver Air Deck 310, Air Deck Fish 310, Sport 310, Adventure 310

62-899778

Dimension: L4.1m x W2.8m with 0.35mm fabric; with M logo in Light Gray and with dry bag(medium).

Fits the following models:
*Mercury Ocean Runner 290, Dynamic 300/310
*Quicksilver Ocean Runner 290

62-899779

Dimension : L4.4m x W2.6m with 0.35mm fabric; with M logo in Light Gray and with dry bag(medium).

Fits the following models:
*Quicksilver Air Deck 340, Air Deck Fish 340, Sport 340, Adventure 340 *Mercury Air Deck 320, Air Deck Fish 320, Sport 320, Adventure 320

62-879179

Dimension: L4.4m x W2.85m with 0.35mm fabric; with M logo & Light Gray and with dry bag(medium).

Fits the following models:
*Mercury 330/340 & 350 Ocean Runner
*Quicksilver 340 Ocean Runner

62-879180

Dimension: L4.8m x W3.2m with 0.35mm fabric; with M logo in Light Gray and with dry bag(medium).

Fits the following models:
*Mercury Sport 365 XS, Adventure 365 XS, Heavy Duty 365 XS/380 *Quicksilver Sport 365 XS, Heavy Duty 365 XS, Adventure 365 XS and Ocean Runner 410

62-879182

Dimension: L4.6m x W3.4m with 0.35mm fabric; with M logo in Light Gray and with dry bag(medium).

Fits the following models:
*Mercury Sport 415 XS, Adventure 415XS, Heavy Duty 415 XS, Ocean Runner 420
*Quicksilver Sport 415 XS, Adventure 415XS, Heavy Duty 415 XS, Ocean Runner 420

BOAT COVER

62-879317A01

Fits Mercury 350 Amanzi and M-Series M350

LACING CUFFS

18 in.(45 cm) lacing cuff for Cross Bar Steering. Two required, order glue separately.

LACING CUFF



62-809107

Black color

For use on Duratex (PVC) fabric

LACING CUFF



62-809107 1

Silver color

For use on Duratex (PVC) fabric

FIBERGLASS (FRP) SEATS

SEAT ASSEMBLY



62-880959T02

Seat with bracket. Fiberglass (L70 cm x W20 cm) Light Gray finish.
Fits Quicksilver 200 & 240 Dinghy
Fits Mercury 200 Roll Up Inflatable Boat (MY 2003 and later)

SEAT ASSEMBLY

62-899622T01

Seat with Bracket. Fiberglass (L80 cm x W20 cm)Light Gray finish.
Fits Mercury 250 and 270 Dynamic in PVC and Hypalon Inflatable Boats (MY 2003 and newer)

SEAT ASSEMBLY

62-809527T08

Seat with bracket. Fiberglass (L85 cm x W20 cm) Light Gray finish.
Fits Mercury 300 Ocean Runner in PVC and Hypalon, 270,310, and 340. Air Deck Hypalon and the 270 and 310 Sport Hypalon Inflatable Boats (MY 2003 and newer).
Fits Quicksilver 290 Ocean Runner

62-880960T03

Seat with bracket. Fiberglass (L85 cm x W20 cm) Light Gray finish.
Fits Quicksilver 240, 250, 270, 310 & 340 Airdeck Deluxe; 220 Airdeck Ultralight; 240, 270, 310 & 340 Sport Enduro

Fits Mercury 240 Roll Up.
Fits 240, 270,310 and 340 Sport PVC, 240, 270,310 and 340 Air Deck PVC, and the 285 Limited Edition Inflatable Boat (MY 2003 and newer).

62-811307T02

Seat with bracket. Fiberglass (L85 cm x W20 cm) Black. Foam seat cover not included.
Fits Quicksilver 270, 310 and 340 Adventure Enduro; 310 - 340 Airdeck Fishing

SEAT W/BRACKET

62-809527T07

Lt. Gray finish
Fits Mercury 330 and 350 Ocean Runner in PVC and Hypalon Inflatable Boat (MY 2003 and newer).
Fits Quicksilver 340 Ocean Runner

62-811823T06

Lt. Gray finish
Fits Mercury 380 Heavy Duty in PVC and Hypalon Inflatable Boat (MY 2003 and newer).
Fits Quicksilver 365 Heavy Duty XS & 365 Adventure XS

62-809527T09

Lt. Gray finish
Fits Mercury 430 Sport XS Inflatable Boat (MY 2003 and newer).
Fits Quicksilver 415 Sport XS

62-809527T10

Lt. Gray finish
Fits Mercury 430 Heavy Duty in PVC and Hypalon Inflatable Boat (MY 2003 and newer).
Fits Quicksilver 415 Heavy Duty XS & 415 Adventure XS

SEAT ASSEMBLY

62-899623T01

Seat with Bracket. Fiberglass (L90 cm x W20 cm)Light Gray finish.
Fits Mercury 300/310 Dynamic PVC and Hypalon Inflatable Boats (MY 2003 and newer).

SEAT W/BRACKET

62-811823T05

Lt. Gray finish
Fits Mercury 380 Sport XS Inflatable Boat (MY 2003 and newer).

ALUMINUM SEATS

SEAT ASSEMBLY



62-899622T

Seat with bracket. Aluminum (L80 cm x W20 cm). Light gray finish.
Fits Mercury 260 and 280 Dynamic in PVC and Hypalon Inflatable Boats (MY 2006 and 2007)

SEAT W/BRACKET



62-811307T05

Aluminum
Fits Quicksilver Airdeck 220, 240, 270, 310 & 340

SEAT ASSEMBLY



62-899623T

Seat with bracket. Aluminum(90 cm). Light gray finish.
Fits Mercury 310 Dynamic PVC and Hypalon Inflatable Boats (MY 2006 and newer).

SEAT W/BRACKET

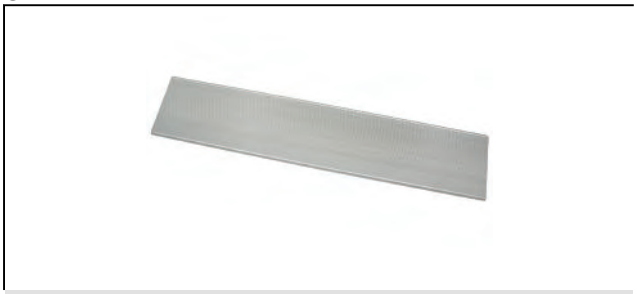

62-809527005

Aluminum

Fits Quicksilver 340 Ocean Runner; 365 Sport XS; 365 Heavy Duty XS & 365 Adventure XS
Fit Mercury 340 Heavy Duty

WOOD SEATS

SEAT ASSEMBLY



62-8M0046027

Seat with bracket, wood (L70 cm x W20 cm). Bolt Rope System. Light gray finish.
Fits Mercury 200/240/270 Dinghy Inflatable Boat (MY 2010 and newer).

SEAT W/BRACKET



62-880960T

Clear finish

Fits Quicksilver 240 Roll Up (2003-2007), Bayliner 240 Roll Up, QS 270 and 340 Air Deck

SEAT W/BRACKET



62-811823 4

Black

Fits Mercury 380 Heavy Duty inflatable boats (2001-2008)
Fits Quicksilver 365 Heavy Duty XS; 365 Adventure XS

62-809527 4

Black

Fits Mercury 430 Heavy Duty inflatable boats (2001-2008)
Fits Quicksilver 415 Heavy Duty XS; 415 Adventure XS

SEAT W/BRACKET



62-880959

Adjustable gray wood seat for 200 roll-up model boat

200 Roll-up 2001 and newer models year boats

SEAT W/BRACKET



62-811307T04

Dark Gray color

Fits 240, 270, 310 and 340 Air Deck inflatable boats (1998 to 2006 model year)
Fits Quicksilver 240, 270, 310 & 340 Deluxe; 270 Sport Enduro; 310 & 340 Fishing

SEAT CUSHIONS

White vinyl foam filled cushion seat fits rowing seat. Six snaps included for attaching.

SEAT CUSHION



62-809773

30 in.(76 cm)

Fits 230 - 260 Models

62-809773 1

34 in.(86 cm)

Fits 270 - 340 Models

62-809773 2

40 in.(102 cm)

Fits 380 Models

62-809773 3

44 in.(112 cm)

Fits 430 Models

SEAT CUSHION



62-8M0065784

Fabric: PVC
Size:(L81.5cm x W 33.5cm x H10cm)
Color: Ivory with Navy Blue trim.

Fits seat(896397005)for Sport 415 XS, Heavy Duty 415 XS, Heavy Duty 470 XS and Ocean Runner 420 application.

SEAT CUSHION-BACK REST



62-8M0065785

Fabric: PVC
Size:(L80 cm x W27 cm x H5.5 cm)
Color: Ivory with Navy Blue trim.

Fits seat(896397005)for Sport 415 XS, Heavy Duty 415 XS, Heavy Duty 470 XS and Ocean Runner 420 application.

SEAT CUSHION



62-8M0099660

Fabric: PVC
Size:(L40cm x W64cm x H5.5cm)
Color: Ivory with Navy Blue trim.

Fits 340/350 Ocean Runner Bow Locker.

62-8M0099661

Fabric: PVC
Size:(L78.5cm x W85cm x H5cm)
Color: Ivory with Navy Blue trim.

Fits 420/430 and 460 Ocean Runner Bow Lockers.

AIR DECK FLOOR SYSTEMS

High pressure floor which can replace the wooden modular floor on Quicksilver sport models. Reduces weight by 30% and offers quick assembly and fast, easy storage. (Must order Thrust Board and Double Action Air Pump.

AIR DECK FLOOR SYSTEM



62-852870A02

One-piece design flap.

Fits 1996 - 2000 model year QS 230 Sport inflatables

62-852871A02

One-piece design flap.

Fits 1996-2000 model year QS 270 Sport inflatables

62-852872A04

One-piece design flap

Fits 1996-2000 model year QS 300 Sport inflatables

62-852873A02

One-piece design flap

Fits 1996-2000 model year QS 330 Sport inflatables

AIR DECK FLOOR SYSTEM



62-879784A03

One-piece design flap

Fits QS 240 Sport inflatables

62-879785A03

One-piece design flap.

Fits QS 310 Sport inflatables

62-879786A03

One-piece design flap

Fits QS 340 Sport inflatables

62-879790A05

One-piece design flap

Fits 340 Air Decks from 2001 and newer/ 340 Sports from 2003 and newer. Also fits 2003 and newer Hypalon products.

62-879787A05

One-piece design flap

Fits 240 Air Decks from 2001 and newer/ 2003 and newer 240 Sports.

62-879788A05

One-piece design flap

Fits 270 Air Decks

AIR DECK FLOOR SYSTEM



62-879789A05

High pressure floor which can replace the wooden modular floor on Mercury sport models. Reduces weight by 30% and offers quick assembly and fast, easy storage. (Must order Thrust Board and Double Action Pump).

Fits 2001 and newer 310 Air decks/ 2003 and newer 310 Sports/ and s 2003 and newer Hypalon boats.

AIR DECK FLOOR SYSTEM



62-896281A06

High pressure floor which can replace the wooden modular floor on Mercury sport models. Reduces weight by 30% and offers quick assembly and fast, easy storage. Two-piece design flap.(Must order Thrust Board and Double Action Pump if floor is replacing the sectional wood floor in Sport models).

Fits 2004 and newer 240 Air Decks

62-896282A06

High pressure floor which can replace the wooden modular floor on Mercury sport models. Reduces weight by 30% and offers quick assembly and fast, easy storage. Two-piece design flap.(Must order Thrust Board and Double Action Pump if floor is replacing the sectional wood floor in Sport models).

Fits 2004 and newer model year 270 Air Decks

62-896283A06

High pressure floor which can replace the wooden modular floor on Mercury sport models. Reduces weight by 30% and offers quick assembly and fast, easy storage. Two-piece design flap.(Must order Thrust Board and Double Action Pump if floor is replacing the sectional wood floor in Sport models).

Fits 2004 and newer model year 310 Air Decks

62-896284A06

High pressure floor which can replace the wooden modular floor on Mercury sport models. Reduces weight by 30% and offers quick assembly and fast, easy storage. Two-piece design flap.(Must order Thrust Board and Double Action Pump if floor is replacing the sectional wood floor in Sport models).

Fits 2004 and newer model year 340 Air Decks

THRUST BOARD



62-852874 3

Thrust Board.

Fits QS 230 Sport inflatables

HEAVY-DUTY SIDE JOINERS

Extra heavy duty side joiners reduce floor flex in heavy load situations. For use with standard floor boards. If used with synthetic floorboards or with competitive boat brands, minor adjustments are required. Groove depth is .510 in.(13 mm). Order one male and one female for each side of boat.

HEAVY-DUTY SIDE JOINERS



62-809521 1

Male coupler

Fits Mecury 380, 430 and 430 Heavy Duty models.
Fits Quicksilver 365, 425 & 470 Heavy Duty Models.

HEAVY-DUTY SIDE JOINERS



62-809521 5

Male coupler

Fits Quicksilver 365 & 380 Heavy Duty models.

HEAVY-DUTY SIDE JOINERS



62-809521 6

Female coupler

Fits Quicksilver 365 & 380 Heavy Duty models.

DURATEX (PVC) - BOAT HANDLES

Additional handles makes lifting easier. Mount them anywhere on the boat for convenient handholds.

BOAT HANDLE W/ CLEAT



62-859007004

Med. Gray color

Fits all Duratex inflatable boats

62-859007009

Black color

Fits all Duratex inflatable boats

HYPALON - BOAT HANDLES

BOAT HANDLES



62-896462

Hypalon molded lift and carry handle. Can be applied to increase lifting and easy of movement. Comes in Dark Gray color.

Fits all Hypalon Air deck model boats 2003 and newer.

BOAT HANDLES



62-891703

Hypalon molded lift and carry handle. Can be attached to provide easier lifting and movement. Comes in Black Color.

Fits 2003 430 Heavy Duty Hypalon boats.

BOW DODGER/ BAG KIT

Provides storage for anything taken on an inflatable outing. The water-repellant dark blue Cordura nylon bag closes with non-corrosive nylon zipper and hangs under the dodger. Four cleats (62-808645) and glue (62-808648) are included. Easy to attach.

BOW DODGER/ BAG KIT



62-8M0082304

Grey with M Logo

Fits all Q/S inflatables

UNDER-SEAT STORAGE BAG

Handsome, color-coordinated storage bag of water-repellant bark blue Cordura nylon. Durable construction for long life. Non-corrosive nylon zipper. Great for storage of repair kit, foot pump, clothes, lunch, etc. Keeps your boat free of clutter.

UNDER-SEAT STORAGE BAG



62-808647T

Under seat storage bag with Mercury Logo.
Blue Color.

Fits all Q/S inflatables except 200 and 230 models.

UNDER-SEAT STORAGE BAG



62-8M0083245

Under seat storage bag with Mercury Logo.
Grey Color.

Fits all Q/S inflatables except 200 and 230 models.

COMBINATION D-RING AND LIFTING HANDLE

Backed by rugged Duratex 100 denier fabric. Always use two-part adhesive when installing

COMBINATION D-RING AND LIFTING HANDLE



62-809777
White fabric w/ composite ring
For use on Duratex fabric

62-809777004
Lt. gray fabric w/ composite ring
For use on Duratex fabric

COMBINATION D-RING AND LIFTING HANDLE



62-809777 2
Lt. gray fabric w/ chrome ring
For use on Duratex fabric

62-809777 3
White fabric w/ chrome ring
For use on Duratex fabric

STAINLESS STEEL D-RINGS

These stainless steel rings can be added to inflatable boats for gas tank tie-downs, lifting rings and securing gear. They are backed with rugged Duratex 1000 denier fabric. Always use a two-part adhesive when installing.

STAINLESS STEEL D-RING



62-811310
Small - Black color
For use on Duratex fabric

62-811310003
Small - Lt. Gray color
For use on Duratex fabric

62-811310 2
Small - Red color
For use on Duratex fabric

STAINLESS STEEL D-RING



62-811309
Large - Black color
For use on Duratex fabric

STAINLESS STEEL D-RING



62-811309003
Large - Gray color
For use on Duratex fabric

62-811309 2
Large - White color
For use on Duratex fabric

MOLDED D-RINGS

Backed by rugged Duratex 100 denier fabric. Always use two-part adhesive when installing

MOLDED D-RING



62-859008003
Black color, 5 in.(127 mm) diameter
For use on Duratex fabric

MOLDED D-RING



62-859008
Lt. Gray color, 4 in.(102 mm) diameter
For use on Duratex fabric

62-859008 1
Med. Gray color, 4 in.(102 mm) diameter
For use on Duratex fabric

HYPALON MOLDED D-RINGS



62-891697
Small molded Red hypalon D-rings used for attachment of life lines.
For use on Hypalon XD fabric

HYPALON MOLDED D-RINGS



62-896456
Large white molded D-rings for Use when towing inflatable boat.
For use on Hypalon XD fabric

HYPALON - MOLDED ROPE HOLDERS



62-896457
Molded gray rope holders made of Hypalon material.
For use on Hypalon XD fabric

SEAT WEBBING

Used to attach standard wooden seat to tubes. Two required.

SEAT WEBBING



62-818701007
Gray webbing w/ gray fabric
For use on Duratex fabric

62-818701 4
Gray webbing w/ white fabric
For use on Duratex fabric

62-818701 5
Black webbing w/ red fabric
For use on Duratex fabric

SEAT WEBBING



62-896452
Made of Hypalon Fabric and used to attach seats to tubes of boat. White with Gray webbing.
For use on Hypalon XD fabric

SEAT WEBBING



62-891695
Made of Hypalon Fabric and used to attach seats to tubes of boat. Red with Black webbing.
For use on Hypalon XD fabric

M.E.K. PATCHING SOLVENT AND CLEANER

Used to clean inflatable tubes prior to using 2-part adhesive.

M.E.K. PATCHING SOLVENT AND CLEANER



92-818702

2-PART ADHESIVE

Used to attach handles and larger accessories to inflatable boat tubes.

2-PART ADHESIVE



92-818651A 3

4 fl oz (118 mL)

2-PART ADHESIVE



92-818651A 4

8 fl oz (237 mL)

2-PART ADHESIVE



92-818651A 2

32 fl oz (946 mL)

1-PART PVC GLUE

Used for small repairs and to attach small accessories.

1-PART PVC GLUE



92-808648

1-PART HYPALON GLUE

92-891690

Hypalon 1-part glue to use on Minor repairs.
Fits all Hypalon fabric based boats.

HYPALON REPAIR KIT

Contains gray fabric Hypalon patch, sandpaper and cement in a waterproof plastic container.

HYPALON GLUE KIT



92-892752

This is a 2 part quarter liter Hypalon glue kit to be used for installation of all Hypalon parts. Kit includes all proper equipment to prep parts for installation.
To be used on all Hypalon Boat product.

HYPALON REPAIR KIT



62-898175

For Sport, Dynamic and Ocean Runner model repairs
Fits 2008 Sport, Dynamic and Ocean Runner models

HYPALON REPAIR KIT



62-896345A01

Contains both Red and Black fabric to perform repairs to Hypalon Boats.
Fits 2003 and newer Heavy Duty Hypalon boats.

HYPALON REPAIR KIT



62-896344A05

Features White and Gray Achilles Hypalon fabric and glue, for Air Deck and Limited Edition model repairs
Fits Air Deck and Limited Edition Hypalon models 2008 Model Year and later

PVC REPAIR KITS

Contains two sizes of fabric patches, valve removal tool in a waterproof plastic container and one tube of cement .

PVC REPAIR KIT



62-885161002

Features Gray and White PVC fabric, umbrella valve in a waterproof plastic container and cement.
Fits Air Deck and Limited Edition PVC model repairs 2008 MY and later.

62-885161003

Features Gray PVC fabric, umbrella valve in a waterproof plastic container and cement.
Fits Roll-Up PVC models MY 2008 and later.

62-883902001

Features Gray PVC fabric and glue, for Sport, Ocean Runner, Air Deck Gray and Dynamic model repairs MY 2008 and later
Fits Sport, Ocean Runner, Air Deck Gray and Dynamic PVC models

PVC REPAIR KIT



62-811314 5

Features Red and Black PVC fabric and glue, for Heavy Duty model repairs
Fits Heavy Duty PVC models

PVC REPAIR KIT



62-899692A01

Black and Dark Green Fabric
Fits 2008 and 2009 Green 430 Heavy Duty

PVC REPAIR KIT



62-883902002

Features Black and Green PVC fabric and glue, for Heavy Duty Adventure model repairs.
Fits Green Heavy Duty PVC models

PVC REPAIR KIT



62-885161003

Features Gray PVC fabric, umbrella valve in a waterproof plastic container and cement.
Fits Roll-Up PVC models MY 2008 and later.

SEAM GRIP

Excellent for minor seam or small puncture repairs. Seal and repairs in one application, dries overnight.

SEAM GRIP



92-809628

1 oz.(30 ml) tube

AQUASEAL

Thicker than Seam Grip. Repairs small tears and cuts in inflatable boat fabrics such as PVC and Hypalon. Dries overnight.

AQUA SEAL



92-809626001

1 oz.(30 ml) tube

AQUASEAL COMBO PACK

Thicker than Seam Grip. Repairs small tears and cuts in inflatable boat fabrics such as PVC and Hypalon. Seams can seal in two hours using the combination of AquaSeal and Cotol-240 (tack-free in 15 minutes for fast repairs).

AQUA SEAL COMBO PACK



92-809627001

Urethane Adhesive. Repair adhesive with COTOL-240 accelerator.
Repairs Wet Suits, Dry Suits and Neoprene products in two hours or less.

PVC FABRIC

Used for patching

PVC FABRIC



62-884705

White color - 24 in.(61 cm) x 30 in.(76 cm)

PCV FABRIC



62-884706

Red color - 24 in.(61 cm) x 30 in.(76 cm)

62-884706 1

Red color - 60 in.(152 cm) x 32.8 ft.10 cm)

PVC FABRIC



62-884707

Black color - 24 in.(61 cm) x 30 in.(76 cm)

62-884707 1

Black color - 60 in.(152 cm) x 32.8 ft.(10 m)

PVC FABRIC



62-899895

Gray color - 24 in.(61 cm) x 30 in.(76 cm)

62-899895001

Gray color - 60 in.(152 cm) x 32.8 ft.(10 m)

PLASTIC REGISTRATION PANELS

PLASTIC REGISTRATION PANELS



62-809774

Plastic 3 in.(7.6 cm) x 24 in.(61 cm) panels fit into slotted rub strake to display registration numbers and state sticker.

Fits 1996 thru 1998 QS inflatables

Priced individually, sold @ multiples of 2

FUEL TANK HOLD DOWN KIT

Made with polypropylene strapping for superior strength and appearance. Quick release buckles simplify replacement of container. Includes two straps with quick release buckles and four footman loops for securing the system to the boat.

FUEL TANK HOLD DOWN KIT



62-809610

AIR PUMPS

Supplied complete with universal adapters to allow inflatation of a wide variety of items from toys to most inflatable boats.

INFLATOR/DEFLATOR



62-8M0078179

110 volt AC, Features an automatic shutoff when pressure reaches 3.0 p.s.i., with manual override for additional pressure if needed.

INFLATOR/DEFLATOR



62-803905

12 volt DC system works off you cars battery to provide up to 4.4 p.s.i. pressure. Auto shutoff prevents over-pressure.

INFLATOR/DEFLATOR



62-889345Q01

This easy to use, double action pump is much faster than the standard foot pump. New compact size for easier storage. 20% more volume to reduce inflation time. Stronger handle, base and fitting stand up to repeated use. Locking attachment fittings make inflation quicker and easier. Locking air pressure gauge can be placed on top of the pump for better visibility.

Quicksilver Branded

REPLACEMENT ADAPTORS



62-809685 4

For Bravo pumps (809632 1 or 803905)

HALKEY-ROBERTS VALVES

HALKEY-ROBERTS VALVE



62-809887

This valve (new style) is identified by eight slots located adjacent to the valve stem and branded with "690NSBV", Gray color

62-879184A02

This valve (new style) is identified by eight slots located adjacent to the valve stem and branded with "690NSBV", Black color

QUICKSILVER VALVE

AIR VALVE ASSEMBLY



62-856646A 1

This air valve assembly is identified with p/n 856646 on flange, Lt. Gray color
Mercury and Quicksilver Soft Bottom Roll Up Inflatable Boats

VALVE FILL ADAPTERS

HALKEY-ROBERTS VALVE FILL ADAPTER



62-809685 1

For 5/8 in.(16 mm) hose and (old style) valve
For Halkey-Roberts valve (foot pump)

UNIVERSAL VALVE FILL ADAPTER



62-809685 3

For 5/8 in.(16 mm) hose and (old & new style) valve
For Halkey-Roberts valve (foot pump)

QUICKSILVER VALVE FILL ADAPTER



62-859044A 1

For 5/8 in.(16 mm) hose and (old & new style) valve
For Quicksilver valve

DUAL-ACTION PUMP VALVE FILL ADAPTERS



62-889347

Fits Dual-Action Pump. Comes with kit 889345Q01.
Mercury, Quicksilver or Haulkey Roberts valve

VALVE TOOL

HALKEY-ROBERTS VALVE UNIVERSAL TOOL



91-809968 1

Works for old and new style Halkey-Roberts inflatable boat valves.

PRESSURE GAUGE

PRESSURE GAUGE



91-804510

PRESSURE GAUGE



62-889346

Lock - in dial pressure gauge to fit all Haulky Roberts valves and provides a sealed fit when using pump.

Fits #62-889345Q01 type double action pump.

OARS AND PADDLES

OAR BLADE



62-883899002

Oar blade with Mercury Logo in PVC - Light Grey.
Fits Ultra Light, Aird Deck, Sport, Ocean Runner, Dynamic - PVC models.

OAR HANDLE ASSEMBLY



63-8M9200340

Oar Handle Assembly PVC - LIGHT GRAY (97.5cm).
Fits 220 ULC, 220 Air Deck, 220 Sport - All PVC models.

OAR HANDLE

62-885156

Lt. Gray for Sport Models.
Mercury Branded

OAR BLADE



62-885157

Oar blade with Mercury Logo in PVC - Dark Grey.
Fits Air Deck, Ocean Runner, Dynamic - HYPALON models.
Mercury Branded

OAR BLADE



62-883899T04

Oar blade with Mercury Logo in PVC - BLACK.
Fits Dinghy, Air Deck Fishing, Sport Adventure & Adventure XS - PVC models.
Mercury Branded

OAR HANDLE

62-885158

Dk. Gray for Air Deck models.
Mercury Branded

OAR HANDLE ASSEMBLY

62-8M0068687

Oar Handle Assembly PVC - BLACK (120cm).
Fits 200 Dingy.

62-885156007

Oar Handle Assembly PVC - BLACK (97.5cm),
Fits 240 Dinghy.

OAR HANDLE ASSEMBLY

62-885159003

Oar Handle Assembly PVC - LIGHT GRAY (110cm).
Fits 250 ULC, 250-290-320 Air Deck, 250-290-320 Sport, 290 Ocean Runner, 250-270-300 Dynamic - ALL PVC models.

OAR HANDLE ASSEMBLY

62-885159005

Oar Handle Assembly PVC - BLACK (110cm).
Fits 290-320 Air Deck Fishing, 250-290-320 Sport Adventure - All PVC models.

OAR HANDLE ASSEMBLY

Image not Available.

62-885156006

Oar Handle Assembly PVC - LIGHT GRAY (124cm).
Fits 365-415 Sport XS.

OAR HANDLE ASSEMBLY



62-8M0050413

Oar Handle Assembly PVC - BLACK (97.5cm).
For old Dinghy Models

T PADDLE ASSEMBLY



62-880999003

T Paddle Assembly with Mercury Logo in PVC - Light Grey
Fits 340-420-460 Ocean Runner PVC

OAR/T PADDLE



62-898200

Oar/T Paddle Assembly with Mercury Logo in PVC - Dark Grey
Fits 340-420-460 Ocean Runner HYPALON

OAR/T PADDLE



62-880999 1

Oar/T Paddle Assembly with Mercury Logo in PVC - Black
Fits 365-415-470-530 Heavy Duty HYPALON

T PADDLE ASSEMBLY



62-880999002

T Paddle Assembly with Mercury Logo in PVC - Black
Fits 365-415-470 Heavy Duty PVC

Notes:

84 - 11149A55 501
88 - 11178A01 652
48 - 11324A45 . . . . . 834, 837, 841, 849, 924, 935, 987, 987, 994
25 - 11332 92
11606A 1 . . . . . 704, 706
11606A 2 . . . . . 704, 706
23 - 11654M 1019
12022A40 . . . . . 47, 53, 54
12022A41 . . . . . 47, 54
12092A13 . . . . . 58, 64, 64
12092A18 . . . . . 58, 62, 63, 64
12092A19 . . . . . 58, 64, 371
12092A20 . . . . . 58, 63, 64, 367, 368
33 - 12127 . . . . . 5, 13
84 - 12334A 2 . . . . . 39, 40, 40, 41, 41
12335A 1 . . . . . 91, 348
12415 501
12415A 2 501
91 - 12427T 732
92 - 12564 2 332
12569A 1 708
12612Q 2 . . . . . 68, 350, 353
12612T 2 . . . . . 68, 350, 353
43 - 12635T 67
12644A 1 . . . . . 133, 391
12756A 1 57
13191Q01 1021
13294451 625
13294452 625
13294457 625
48 - 13366A62 . . . . . 873, 878, 982
48 - 13368A62 . . . . . 873, 878, 981, 982
48 - 13369A62 . . . . . 873, 878, 981, 982
48 - 13370A62 . . . . . 873, 878, 981
48 - 13371A62 . . . . . 873, 878, 981
48 - 13372A62 . . . . . 873, 878, 981
48 - 13373A62 . . . . . 873, 878, 981
13536A13 500
13536A14 501
22 - 13563Q 3 76
22 - 13563Q 7 75
22 - 13563T 3 76
22 - 13563T 7 75
13611 198
33 - 13686Q 5, 17, 17, 18
48 - 13700A46 . . . . . 811, 820, 821, 822, 823, 835, 838, 842, 856, 924
48 - 13700A56 . . . . . 989, 993, 994
48 - 13701A46 . . . . . 811, 820, 821, 822, 823, 835, 838, 842, 856, 924
48 - 13701A56 . . . . . 989, 993, 994
48 - 13702A46 . . . . . 811, 820, 821, 822, 835, 838, 842, 856, 924
48 - 13702A56 . . . . . 989, 993, 994
48 - 13703A46 . . . . . 811, 820, 821, 822, 835, 838, 842, 856, 924
48 - 13703A56 . . . . . 989, 993
48 - 13704A46 . . . . . 811, 820, 821, 822, 823, 835, 838, 842, 856
48 - 13705A46 . . . . . 811, 820, 821, 822, 823, 835, 838, 842, 856
48 - 13705A56 . . . . . 989, 993
48 - 13706A46 . . . . . 811, 820, 821, 822, 823, 835, 838, 842, 856
48 - 13706A56 . . . . . 989, 993
48 - 13707A46 . . . . . 811, 820, 821, 822, 823, 835, 838, 842, 856
11 - 13914Q02 . . . . . 996, 1008
13914Q03 . . . . . 361, 996, 1008
33 - 14103550 . . . . . 7, 13, 14, 14, 15, 15, 16, 16, 16, 17, 17
33 - 14103568 . . . . . 7, 17, 17, 18, 18
33 - 14103Q 7, 13, 13, 14, 14, 15, 15, 16, 16, 16, 17
14205M 100, 115
22 - 14213K 76
22 - 14213Q 76
11 - 14279M 1011
14359 1021
14586 233
14586A 3 . . . . . 86, 87, 87, 88, 88
14586A 4 . . . . . 86, 88
14586A 6 . . . . . 86, 88
14586A 7 . . . . . 86, 88
34 - 14594A 2 201
34 - 14594A 3 201
87 - 14645A 4 . . . . . 30, 641
14801A 1 . . . . . 138, 143, 146, 146, 148, 148, 148
33 - 14814568 . . . . . 8, 14, 14
33 - 14814Q 7, 17

14865A02 . . . . . 138, 142, 145, 146, 146
14865A 1 . . . . . 138, 142, 148
15000A14 . . . . . 40, 352, 355, 357, 360, 363, 366, 619
15000A 7 . . . . . 39, 42, 42, 352, 355, 357, 619
15300 . . . . . 100, 114
15301A 1 641
15768A 3 . . . . . 125, 392
22 - 15781A12 85
15943A 1 . . . . . 90, 348
15967 92
15969A09 . . . . . 92, 348
15969A10 . . . . . 92, 348
15969A11 92
15969A13 92
15985A02 . . . . . 93, 185, 371, 1026
15995 501
16074T05 . . . . . 21, 22, 26
12 - 16140 997
12 - 16140 2 996
48 - 16144A01 965
16145 2 996
16145Q01 . . . . . 996, 1020
12 - 16146 . . . . . 996, 1017
11 - 16147 . . . . . 996, 997, 1012
11 - 16147 1 996
47 - 16154 1 232
47 - 16154 3 231
16159A03 231
35 - 16248 . . . . . 79, 231, 350, 352, 355, 358
48 - 16312A46 . . . . . 835, 837, 842, 853, 924, 976, 976, 988
48 - 16314A46 . . . . . 807, 814, 825, 835, 837, 842, 853, 924, 975, 988
48 - 16315A46 . . . . . 807, 835, 837, 842, 853, 975, 976, 988
48 - 16316A46 . . . . . 807, 814, 825, 835, 837, 842, 853, 924, 975, 976, 987, 987, 988
48 - 16317A46 . . . . . 807, 835, 837, 842, 853, 975, 976, 987
48 - 16318A46 . . . . . 807, 814, 825, 835, 837, 842, 853, 924, 975, 976, 987, 988
48 - 16319A46 807
48 - 16320A46 . . . . . 842, 975, 976, 987, 987, 988
48 - 16321A46 . . . . . 842, 975, 987, 988
48 - 16436A45 . . . . . 806, 813, 824, 834, 837, 842, 849, 988
48 - 16436CP1 . . . . . 834, 837, 842, 849
48 - 16438A45 . . . . . 834, 837, 842, 849, 924, 988, 988
48 - 16438CP1 . . . . . 834, 837, 842, 849
48 - 16440A45 . . . . . 834, 837, 841, 849, 924, 988, 988, 994, 995
48 - 16440CP1 841
48 - 16550A46 . . . . . 982, 986, 988, 994
35 - 16595Q 303
16645A 4 . . . . . 136, 392
26 - 16709A 2 243
16755T 1 243
16837A 2 . . . . . 21, 22, 22, 26, 26
16838A 4 . . . . . 24, 26, 26, 26
16839A 4 89
16840A 2 540
16841K02 . . . . . 67, 353
16841Q02 . . . . . 67, 353
16909A 2 . . . . . 342, 345, 359, 361, 364, 368, 372, 375, 528
48 - 16986A46 . . . . . 807, 808, 813, 814, 815, 816, 819, 824, 825, 826, 834, 841, 853, 923
48 - 16988A46 . . . . . 807, 808, 813, 814, 815, 819, 824, 825, 826, 834, 841, 853, 923, 981, 981
48 - 16990A46 . . . . . 834, 855, 981
48 - 16992A46 . . . . . 834, 855, 981, 986
48 - 16994A46 . . . . . 981, 986
48 - 16996A46 . . . . . 981, 986
17024 . . . . . 350, 709
17024A03 . . . . . 353, 704, 706
17063T 528
84 - 17162 . . . . . 350, 540
84 - 17175 . . . . . 21, 350
85 - 17198 648
85 - 17199 649
85 - 17200 649
17264T 2 . . . . . 101, 107, 111, 111, 117, 232
17280A 2 70
48 - 17310A46 . . . . . 816, 817, 834, 841, 853, 923, 981, 981
48 - 17312A46 . . . . . 807, 808, 813, 814, 815, 816, 817, 824, 825, 826, 834, 841, 853, 923, 981, 981
48 - 17314A46 . . . . . 807, 808, 813, 814, 815, 816, 817, 824, 825, 826, 834, 841, 853, 923, 981, 981
17334A 2 507
17334A 7 507
17 - 17554M 1014
17611T 1025
33 - 17719547 . . . . . 8, 13, 13
17729A 1 708

84 - 17829A10 . . . . . 365, 605, 635
84 - 17829A 2 635
84 - 17829A20 . . . . . 365, 605, 636
18018A 1 202
48 - 18278A46 . . . . . 811, 820, 821, 822, 823, 835, 838, 842, 857, 924
48 - 18280A46 . . . . . 820, 835, 838, 842, 856
48 - 18281A46 . . . . . 820, 835, 838, 842, 856
48 - 18281A56 . . . . . 989, 993
87 - 18286A17 641
87 - 18286A18 . . . . . 30, 343, 363, 366, 642
87 - 18286A19 . . . . . 343, 363, 366, 642
87 -18286A46 637
87 - 18286A46 . . . . . 370, 374, 642
87 - 18286A47 . . . . . 370, 374, 642
48 - 18428A 5 . . . . . 830, 845, 964
35 - 18458Q 3 84
35 - 18458Q 4 . . . . . 84, 348
35 - 18458T 3 83
35 - 18458T 4 . . . . . 84, 230
18563A 1 . . . . . 135, 392
48 - 18606A40 . . . . . 838, 869, 939
48 - 18606A 6 . . . . . 839, 869
48 - 18607A40 . . . . . 838, 869, 939
48 - 18607A 6 . . . . . 839, 869
48 - 18608A40 . . . . . 838, 869, 939
48 - 18608A 6 . . . . . 839, 869
48 - 18609A40 . . . . . 838, 869, 939
48 - 18609A 6 . . . . . 839, 869
48 - 18610A40 . . . . . 838, 869, 939
48 - 18610A 6 . . . . . 838, 869
48 - 18611A40 . . . . . 838, 869, 939
48 - 18611A 6 . . . . . 838, 869
48 - 18612A40 . . . . . 838, 869, 939
48 - 18612A 6 . . . . . 838, 869
48 - 18613A40 . . . . . 838, 869, 939
48 - 18613A 6 . . . . . 838, 869
48 - 18614A40 . . . . . 838, 869, 990, 992, 992
48 - 18614A 6 . . . . . 838, 869
48 - 18615A40 . . . . . 838, 869, 990, 992
48 - 18615A 6 . . . . . 838, 869
48 - 18616A40 . . . . . 838, 869, 990, 992
48 - 18616A 6 . . . . . 838, 869
48 - 18617A40 . . . . . 838, 869, 990, 992, 992
48 - 18617A 6 . . . . . 838, 869
48 - 18618A40 . . . . . 838, 868, 990, 992
48 - 18618A 6 . . . . . 838, 869
48 - 18619A40 . . . . . 838, 869, 990, 992
48 - 18619A 6 . . . . . 838, 869
48 - 18620A40 . . . . . 838, 868, 939
48 - 18620A 6 . . . . . 838, 869
48 - 18621A40 . . . . . 838, 868, 939
48 - 18621A 6 . . . . . 838, 869
18654A 1 243
18787019 199
18787T 2 199
18789T04 199
18852M 103, 104, 115, 115
19220A 4 1027
33 - 19424 . . . . . 5, 14, 14
47 - 19453T 232, 233
35 - 19485 . . . . . 267, 306
48 - 19517L71 . . . . . 876, 878
48 - 19518L71 . . . . . 876, 878
48 - 19519L71 . . . . . 876, 878
48 - 19520L71 . . . . . 876, 878
48 - 19529L71 . . . . . 876, 878
48 - 19530L71 . . . . . 876, 878
48 - 19531L71 . . . . . 875, 878
48 - 19532L71 . . . . . 875, 878
19608A14 . . . . . 364, 368, 704, 707, 707
19609A 6 . . . . . 364, 368, 704, 707, 707
19624A 1 708
48 - 19636A10 . . . . . 831, 847, 979
48 - 19638A40 . . . . . 831, 847, 979
48 - 19639A40 . . . . . 831, 847
48 - 19640A40 . . . . . 831, 847, 921, 979
48 - 19642A40 979
48 - 19644A 5 . . . . . 831, 852, 921, 979
19669T 996, 1025
87 - 19674A05 . . . . . 391, 626
87 - 19674A06 . . . . . 391, 627
87 - 19674A07 . . . . . 343, 348, 363, 366, 370, 374, 378, 381, 385, 391, 627
87 - 19674A08 . . . . . 343, 348, 363, 367, 370, 374, 378, 381, 385, 391, 627, 629
87 - 19674A12 . . . . . 343, 348, 363, 367, 370, 374, 378, 381, 385, 391, 627, 630
87 - 19674A13 . . . . . 343, 348, 363, 367, 370, 374, 378, 381, 385, 391, 627, 630
87 - 19674A14 . . . . . 348, 378, 381, 385, 628, 630
87 - 19674A15 . . . . . 348, 378, 381, 385, 628, 630
33 - 19796 . . . . . 8, 13
48 - 19838A46 . . . . . 811, 820, 821, 822, 823, 835, 838, 842, 857, 924
48 - 19841A46 . . . . . 811, 820, 821, 822, 823, 835, 838, 842, 857, 924
12 - 20084 1017
22831Q 3 76
22831T 3 76
24789A 1 68
92 - 25711 3 330
12 - 27025 1017
12 - 28421 65
12 - 29710 1016

30185Q 3 75
30185T 3 75
30431104 623
30431106 623
30431108 623
30431123 623
30431124 623
30431125 623
30431126 623
30431127 623
30431128 623
30431129 623
30431130 623
30431131 623
30431132 623
30431133 623
30431134 623
91 - 30500 339
30635Q 3 76
30635T 3 76
12 - 31013 1017
12 - 31211Q03 . . . . . 996, 997, 1017
31640Q03 . . . . . 101, 110, 111, 111, 112, 112, 113, 113, 114, 114, 114, 115, 230
31640Q 4 . . . . . 101, 191, 1023
31640T07 . . . . . 101, 107, 108, 108, 111, 112, 113, 114, 114, 117, 118, 230, 232, 233
31640T 4 . . . . . 101, 110, 111, 111, 112, 112, 113, 113, 113, 114, 114, 115, 191, 195, 195, 196, 196
31640T 6 . . . . . 101, 191, 195, 195, 196, 196
11 - 31990Q02 . . . . . 996, 1009
12 - 32007 1017
32053T 1025
22 - 32561 85
34127T 2 . . . . . 191, 195, 195, 196, 196
92 - 34227Q02 330
34762A 1 . . . . . 189, 195, 195, 196, 196
34765A 2 . . . . . 133, 391
14 - 34817 1019
11 - 34933 1012
22 - 34982 84
22 - 36305T 156
37293T 127, 389, 636
91 - 37299A 2 339
38859A 1 1020
12 - 39701 1018
12 - 39817 1018
11 - 40119 12 . . . . . 996, 1012
11 - 40119Q02 . . . . . 996, 1008
11 - 40140 . . . . . 996, 1012
33 - 41263M 5, 15, 18, 18, 19
41323A03 . . . . . 705, 706
54 - 41582Q 7 . . . . . 78, 181
54 - 41582T 7 . . . . . 78, 85, 181
92 - 41669 1 334
41729A 3 . . . . . 91, 348
23 - 42091 1 1015
42121Q02 . . . . . 101, 106, 107, 109, 109, 117
42282A 4 . . . . . 21, 22, 22, 23, 23, 23, 26, 26, 27, 27, 27
13 - 42351 1 1018
42594T 1007
42600A09 187
42600A14 186
42600A18 210
42630 1 1024
48 - 42738A45 . . . . . 817, 818, 827, 828, 829, 832, 848, 922, 984
48 - 42738CP1 . . . . . 832, 848
48 - 42740A45 . . . . . 817, 818, 827, 828, 829, 832, 848, 980, 984
42805A 6 540
46 - 43024A09 232
46 - 43024A 7 . . . . . 230, 233
47 - 43026T 2 . . . . . 230, 233, 234, 234, 235
26 - 43035A 4 67
43549 1024
48 - 43592A61 . . . . . 873, 878, 979
48 - 43592A71 . . . . . 873, 878
43615T 1 1025
43636T 1026
43672 1026
43676T 996, 1025

91 - 43693A 2 731
43 - 44102A 2 . . . . . 66, 349
44267A02 . . . . . 133, 144, 391
44267A03 . . . . . 133, 145, 391
44267A04 . . . . . 134, 152
44267A05 . . . . . 134, 152, 156, 391
44267A06 . . . . . 134, 152, 156, 391
44267A07 . . . . . 134, 152, 156, 391
44267A08 . . . . . 134, 152, 156, 392
44349A 1 . . . . . 135, 392
44357Q 2 . . . . . 68, 170, 344, 349, 353, 356, 358, 361, 364, 368, 371, 375, 379, 382, 386, 392
44357T 2 . . . . . 68, 170, 344, 349, 353, 356, 358, 361, 364, 368, 371, 375, 379, 382, 386, 392
50 - 44369A 3 . . . . . 37, 42
45676T 1006
18 - 45882 1014
84 - 46239A 1 635
11 - 46335 1012
46838A 4 643
46838A 6 643
47820A 1 101
18 - 47959 . . . . . 996, 997, 997
47974A10 . . . . . 40, 619
49734 . . . . . 127, 389, 501, 637
52148A 1 55
11 - 52707Q 1 . . . . . 996, 996, 997, 1010
35 - 53336Q 238, 240, 241
54212A 7 . . . . . 391, 613
54737T 1006
12 - 54738 1016
32 - 54950 53 499
32 - 54950600 500
12 - 55072 1016
12 - 55073A 2 1018
55074T 1021
55642A13 637
55989Q 9 . . . . . 189, 195, 195, 196
55989T 3 . . . . . 189, 195, 195, 196
55989T 9 189
56292Q04 1021
12 - 56355 1016
57908 11 649
58366T 2 636
35 - 59072 80
47 - 59362T 6 . . . . . 240, 241
33 - 59571B 120
5 -5E31200TP 206
5 -5E31210TP 207
5 -5E31900TP 206
5 -5E31910TP 207
5 -5F36202HH 207
5 -5F36212HH 207
5 -5F36902HH 207
5 -5F36912HH 207
5 -5G31202HH 207
5 -5G31212HH 207
5 -5G31902HH 207
5 -5G31912HH 207
5 -5G36202HH 207
5 -5G36212HH 207
5 -5G36902HH 207
5 -5G36912HH 207
5 -5H41300TZ 206
5 -5H41310TZ 207
5 -5H41400TZ 206
5 -5H41410TZ 207
5 -5H41600TZ 206
5 -5H41610TZ 207
5 -5N15E20IH 213
5 -5N15H20IH 213
5 -5N15K20IH 213
5 -5N15N20IH 213
5 -5N15W20IH 213
5 -5N25E20IH 213
5 -5N25H20IH 213
5 -5N25H23IH 213
5 -5N25K20IH 213
5 -5N25K23IH 213
5 -5N25N20IH 213
5 -5N25N23IH 213
5 -5N25W20IH 213
5 -5R15E20HH 213
5 -5R15H20HH 213
5 -5R15J20HH 213
5 -5R15K20HH 213
5 -5R15N20HH 213
5 -5R15P20HH 213
5 -5R15W20HH 213
5 -5R15X20HH 213
5 -5R25E20HH 213
5 -5R25H20HH 213
5 -5R25J20HH 213
5 -5R25K20HH 213
5 -5R25N20HH 213
5 -5R25P20HH 213
5 -5R25W20HH 213
5 -5R25X20HH 213
5 -5V15E40IH 213
5 -5V15F40IH 213
5 -5V15G40IH 213
5 -5V15H40IH 213
5 -5V15L40IH 213
5 -5V15P40HH 213
5 -5V15X40IH 213
5 -5V25E40IH 213
5 -5V25F40IH 213

5 -5V25G40IH 213
5 -5V25H40IH 213
5 -5V25L40IH 213
5 -5V25P40HH 213
5 -5V25X40IH 213
86 - 60602T 648
249 - 6080A42 200
86 - 60831T 649
86 - 60878T 648
61086A11 . . . . . 157, 162, 165
84 - 61378A 2 200
86 - 61606T 648
6 -620000091 206
62351A10 . . . . . 24, 26, 26, 27, 27, 27, 27, 27, 28
62999 1025
11 - 64075A 1 . . . . . 1008, 1012, 1015
65091Q01 1019
6 -6511002NZ 206
6 -6521002KH 207
57 - 65607Q 238
32 - 67032A12 203
32 - 67032A24 203
32 - 67032A36 203
32 - 67032A48 203
32 - 67032A72 203
32 - 67032A96 203
10 - 67755 1 65
10 - 67755 2 65
68858T 1006
68861T 1006
84 - 69108A 5 635
69355 653
11 - 69578Q 1 . . . . . 996, 1009
69622A 7 126
6 -6M29102IH 212
83 - 70350A 2 . . . . . 24, 26, 27
70599A 5 . . . . . 350, 708
17 - 70733 1014
22 - 72932A 3 . . . . . 129, 131
72957A 5 . . . . . 98, 187
72958A 5 . . . . . 99, 187
48 - 73132A45 . . . . . 816, 817, 818, 827, 828, 829, 832, 848, 922, 980, 984
48 - 73134A45 . . . . . 816, 817, 818, 827, 828, 829, 832, 848, 922, 980
48 - 73136A45 . . . . . 809, 816, 817, 818, 827, 828, 829, 832, 848, 922, 980
48 - 73138A45 . . . . . 809, 816, 817, 818, 827, 828, 829, 832, 848, 922, 980
48 - 73140A45 . . . . . 809, 816, 817, 818, 827, 828, 829, 832, 848, 922, 980, 984
48 - 73142A45 . . . . . 809, 816, 817, 818, 827, 828, 829, 832, 848, 980, 983
48 - 73144A45 . . . . . 809, 816, 817, 818, 827, 828, 829, 832, 848, 980, 983
48 - 73146A45 . . . . . 809, 816, 817, 818, 827, 828, 829, 980, 983
73345A 1 . . . . . 996, 1019, 1020
35 - 73532 79
339 - 7370A40 20
91 - 74057A 6 339
91 - 74057K 5 . . . . . 283, 1032
91 - 74057Q 5 323
74639A 2 243
75095Q 2 629
75095T 2 628
76214 4 . . . . . 192, 196
76214 6 . . . . . 192, 196
76214A 6 . . . . . 102, 114, 115, 192, 196, 230, 233, 234, 235
76214Q 5 . . . . . 101, 114, 115, 191, 1006, 1023
76214T 1 102
76214T 3 102
76214T 5 . . . . . 101, 108, 108, 191, 196, 230, 233, 234, 235
14 - 76281 1018
14 - 76281Q 996
76366T04 202
76409F 1 184
76426A 9 637
76535T 706, 709
91 - 76675T 1 . . . . . 99, 187
26 - 76868A04 243
48 - 77338A33 . . . . . 833, 840, 848
48 - 77338A45 . . . . . 807, 808, 814, 815, 816, 817, 825, 826, 827, 828, 833, 840, 848, 923, 981
48 - 77338CP1 . . . . . 833, 840, 848, 923
48 - 77340A33 . . . . . 833, 840, 848
48 - 77340A45 . . . . . 807, 808, 814, 815, 816, 817, 825, 826, 827, 828, 833, 840, 848, 923, 981
48 - 77340CP1 . . . . . 833, 840, 848, 923
48 - 77342A33 . . . . . 833, 840, 848
48 - 77342A45 . . . . . 807, 808, 814, 815, 816, 817, 825, 826, 827, 828, 833, 840, 848, 923, 981
48 - 77344A45 . . . . . 807, 808, 814, 815, 819, 824, 826, 833, 840, 848, 923, 981
48 - 77346A45 . . . . . 807, 808, 814, 815, 819, 824, 826, 833, 840, 848, 923, 981, 986

48 - 77348A45 . . . . . 807, 808, 814, 815, 819, 824, 826, 833, 840, 848, 923, 981, 986
48 - 77350A45 . . . . . 807, 808, 814, 815, 819, 824, 826, 833, 840, 848, 923, 981, 986
77409A 1 499
77409B 1 499
34 - 77887A 1 201
48 - 77898A40 . . . . . 990, 995
48 - 77900A40 . . . . . 990, 995
48 - 78112A45 . . . . . 806, 807, 812, 813, 824, 834, 837, 842, 849, 924, 976, 988
78112CP1 . . . . . 834, 837, 849
48 - 78114A45 . . . . . 806, 807, 812, 813, 824, 834, 837, 842, 849, 924, 976, 988, 988
48 - 78114CP1 . . . . . 834, 837, 842, 849
48 - 78116A45 . . . . . 805, 806, 807, 812, 813, 814, 824, 825, 834, 837, 842, 849, 924, 975, 976, 988
48 - 78116CP1 . . . . . 834, 837, 842, 849
48 - 78117A40 . . . . . 806, 813, 824, 834, 837, 842, 849
78408A 5 637
88 - 79023A91 652
88 - 79023A93 663
88 - 79023A94 . . . . . 652, 663
88 - 79023T10 652
88 - 79023T56 652
88 - 79023T90 652
88 - 79091 650
79476A 1 185
79476A 3 185
79476A 4 185
79476A 5 185
79476A 6 185
79 - 79889A 1 507
11 - 80103M 1011
802002Q 1 1010
802009Q 1 . . . . . 997, 1011
802010Q 1 1010
802126Q 1 . . . . . 997, 1011
91 -802653K02 . . . . . 97, 263, 339, 355, 358, 361, 364, 367, 374
91 -802653Q02 . . . . . 97, 339, 355, 358, 361, 364, 367
802755 . . . . . 218, 530
92 -802844K01 278
92 -802844Q02 317
92 -802851K01 . . . . . 278, 280
92 -802851Q02 . . . . . 317, 319
92 -802859A 1 . . . . . 283, 1032
92 -802859Q 1 323
92 -802861A 1 . . . . . 283, 1032
92 -802861Q 1 323
92 -802863A 1 . . . . . 283, 1032
92 -802863Q 1 323
92 -802878020 285
92 -802878021 285
92 -802878 1 . . . . . 285, 1032
92 -802878 10 286
92 -802878 12 286
92 -802878 14 286
92 -802878 2 285
92 -802878 30 286
92 -802878 50 . . . . . 287, 1033
92 -802878 52 286
92 -802878 53 287
92 -802878 54 287
92 -802878 55 272
92 -802878Q 1 327
92 -802878Q10 326
92 -802878Q12 326
92 -802878Q14 326
92 -802878Q16 326
92 -802878Q 2 327
92 -802878Q20 327
92 -802878Q21 327
92 -802878Q30 326
92 -802878Q32 326
92 -802878Q39 327
92 -802878Q50 328
92 -802878Q52 328
92 -802878Q53 328
92 -802878Q54 328
92 -802878Q55 310
92 -802879Q 1 310
35 -802886Q 303
35 -802886T 264
802889A 1 . . . . . 338, 392
802889Q 1 . . . . . 98, 338, 364, 367, 371, 374, 392
91 -802891Q05 319
35 -802893A 4 . . . . . 83, 179, 392
35 -802893Q01 . . . . . 83, 180
35 -802893Q 4 . . . . . 83, 179, 392
35 -802893T 83, 180, 238, 239, 240, 240, 241
64 -802894A12 691
64 -802894A13 691
64 -802894A14 691
64 -802894A15 691
64 -802894A16 691
64 -802895A15 689
64 -802902A 1 697
64 -802903A 1 699
64 -802905A14 700
64 -802905A16 700
64 -802905A18 700
64 -802905A20 700
64 -802905A22 700
64 -802905A24 700

803061T 1 . . . . . 86, 88, 89
31 -803496T 1 67
43 -803500T 1 66
33 -803507 . . . . . 8, 11, 11, 11, 231, 232
803583A 4 539
35 - 80365M 79
803731 107
803743 996
803743Q01 . . . . . 996, 1008
803743Q02 . . . . . 996, 1008
47 -803748 . . . . . 231, 232
47 -803748 1 231
47 -803748Q01 231
47 -803748Q02 231
46 -803750A06 . . . . . 231, 232
803833T 103, 115
803890T 1019
62 -803905 1055
47 -803984T 1029
47 -803985T 1029
804043 . . . . . 107, 232
64 -804378A 1 . . . . . 698, 699, 699, 699, 700, 701, 701, 701
91 -804510 1056
804540 231
22 -804787Q 77, 370
22 -804787T 77, 371, 374
3302-804844002 . . . . . 238, 240, 241
805100 1021
805101T 1022
805130A 6 502
805130A 8 502
805134A 3 503
805134A 6 592
805218T 501
805265A 1 136
87 -805268 . . . . . 127, 637
79 -805289A 1 464
805320A03 502
91 -805457T 1 1030
91 -805475A 1 732
805759T 3 . . . . . 239, 240
35 -805809T 268, 307
805984A 1 . . . . . 130, 131
806000 194
806054A 1 . . . . . 127, 392
806105Q 1 192
806105T 1 . . . . . 192, 196
806187A 1 . . . . . 192, 196
806188A 2 . . . . . 193, 196
806188K01 . . . . . 193, 196
806188Q01 193
806189A 2 . . . . . 193, 196
806189Q 1 193
806189T 1 . . . . . 193, 196
806190A 2 . . . . . 193, 196
806190Q 1 193
806190T 1 . . . . . 193, 196
806193A49 126
35 -806329A 1 . . . . . 174, 175
806385T 464
23 -806445A 1 126
806490T 501
806688A02 185
91 -806794A02 731
91 -806794A03 731
22 -806836A 3 . . . . . 129, 131
22 -806837A 1 . . . . . 130, 131
22 -806837A 2 130
806843A06 . . . . . 171, 172
806843A 2 . . . . . 171, 172
807130A21 . . . . . 133, 136, 144, 152, 155, 391
807130A 6 . . . . . 133, 136, 391
46 -807151A25 . . . . . 160, 166
46 -807151A 5 . . . . . 159, 165, 166
35 -807172A 1 180
807252T 5 . . . . . 238, 239, 240, 240, 241
35 -807256T 182
807459A09 174
807459A 3 . . . . . 173, 174
807477A 5 . . . . . 137, 148, 149
807611T 135, 392
807639A 3 . . . . . 158, 166, 167, 167
807901A 3 . . . . . 127, 128, 159
807901A 4 . . . . . 127, 128, 159
807901A 5 . . . . . 159, 165, 166
807901T 6 . . . . . 158, 165
91 -807903A 1 731
807963A 1 . . . . . 138, 146, 148
54 -808112 197
35 -808275 182
62 -808647T 1049
92 -808648 1052
91 -808696 649
67 -808887Q 78, 178, 276, 314
35 -809096 85
35 -809100 183
35 -809101 183
62 -809107 1044
62 -809107 1 1044
809485 . . . . . 221, 712
809486 . . . . . 220, 711

62 -809521 1 1048
62 -809521 5 1048
62 -809521 6 1048
62 -809527005 1046
62 -809527 4 1046
62 -809527T07 1045
62 -809527T08 1045
62 -809527T09 1045
62 -809527T10 1045
62 -809610 1055
92 -809626001 1054
92 -809627001 1054
92 -809628 1054
809662T 105, 117, 118, 118, 118, 118, 118, 190, 191, 195, 195, 195, 196, 196, 196, 1005
809664A 1 . . . . . 105, 117, 118, 118, 118, 118, 118, 190, 191, 195, 195, 196, 196, 196, 1005
809666A02 . . . . . 190, 196, 1005
809666A03 . . . . . 190, 196, 1005
809666T 190, 191, 195, 196, 1006
809666T01 . . . . . 190, 196
809670T 190, 191, 195, 196, 196, 1006
62 -809685 1 1056
62 -809685 3 1056
62 -809685 4 1055
809690A 1 . . . . . 106, 189
62 -809773 1046
62 -809773 1 1046
62 -809773 2 1046
62 -809773 3 1046
62 -809774 1055
62 -809777 1050
62 -809777004 1050
62 -809777 2 1050
62 -809777 3 1050
92 -809818 335
92 -809818001 336
92 -809818002 337
92 -809819 336
92 -809820 336
92 -809820001 337
92 -809821 335
92 -809822 336
92 -809822001 336
92 -809824 334
92 -809825 332
92 -809825001 332
92 -809826 332
92 -809827Q01 335
92 -809828002 332
92 -809828 1 334
92 -809833 331
92 -809834 333
35 -809867 183
35 -809868T 183
64 -809883A 1 697
62 -809887 1055
91 -809968 1 1056
33 -810883 . . . . . 120, 124, 242
62 -811307T02 1045
62 -811307T04 1046
62 -811307T05 1045
62 -811309 1050
62 -811309003 1050
62 -811309 2 1050
62 -811310 1050
62 -811310003 1050
62 -811310 2 1050
62 -811314 5 1053
811635K 2 238
62 -811823 4 1046
62 -811823T05 1045
62 -811823T06 1045
811990M 103, 115
84 -812441A10 . . . . . 390, 605
84 -812441A15 . . . . . 390, 605
84 -812441A20 . . . . . 390, 605
84 -812475A20 . . . . . 390, 603
84 -812475A25 . . . . . 390, 603
84 -812475A 3 . . . . . 390, 603
812497A 4 537
812497A 5 537
812497A 6 538
812497T03 537
88 -812619 652
1263-812718A 2 90
84 -812835A30 . . . . . 390, 605
84 -812835A45 . . . . . 390, 605
48 -812948A10 . . . . . 831, 847
48 -812949A02 . . . . . 830, 846, 920, 929, 965
48 -812950A02 . . . . . 830, 846, 920, 929, 965
48 -812950A10 . . . . . 831, 847
48 -812951A02 . . . . . 830, 846, 920, 965

48 -812952A10 921
48 -812954A10 . . . . . 830, 847, 920, 929
46 -812966A12 232
33 -813412 6
33 -813413 . . . . . 6, 15, 16, 17
33 -813415 . . . . . 120, 122
33 -813418 . . . . . 8, 13, 14, 14
33 -813421 4 . . . . . 120, 123, 124, 124, 125
33 -813425 . . . . . 120, 121, 123
33 -813469 . . . . . 7, 13, 14, 15, 16
33 -813471 1 . . . . . 120, 121, 121
33 -813472 . . . . . 8, 13, 18, 18, 19
48 -813730A 3 . . . . . 830, 845, 964, 975
86 -813936T 647
86 -813937A 2 647
86 -813937T 648
87 -813960A 4 40
87 -814324A 2 . . . . . 391, 627
87 -814324B 2 627
87 -814407A 3 . . . . . 35, 642
86 -814433T 648
86 -814434T 648
27 -814658A 6 201
814951 4 708
18 -815026 . . . . . 996, 997, 1015
18 -815026 4 996
48 -815083A01 . . . . . 830, 846, 919, 929, 964, 982
48 -815083A02 . . . . . 830, 846, 919, 929, 964
48 -815084A01 . . . . . 964, 982
48 -815084A02 . . . . . 964, 982
17 -815111Q02 . . . . . 996, 1014
87 -815200A02 641
87 -815200A 1 641
34 -815242A 3 201
815279A 3 20
815407T 5 238
815471T 1 243
815596A 2 86
815632A02 . . . . . 185, 1026
48 -815758A46 . . . . . 836, 837, 843, 860, 924, 936
48 -815760A46 . . . . . 836, 837, 843, 860, 924, 936
48 -815762A46 . . . . . 836, 837, 843, 860
35 -816168 . . . . . 268, 306
35 -816296A 3 80
35 -816296K03 79
35 -816296K 2 79
54 -816311T 653
816318A 4 1027
33 -816336Q 120, 121, 124, 238, 240, 241
22 -816339 . . . . . 184, 392
816366A42 . . . . . 46, 53, 54
816366A48 . . . . . 46, 52, 53
816366A52 . . . . . 46, 54, 371
48 -816374A46 843
816431A 1 243
816492A 9 508
26 -816575A 4 243
84 -816626A11 . . . . . 352, 355, 357, 617
84 -816626A15 . . . . . 222, 352, 355, 357, 617
84 -816626A 2 . . . . . 222, 352, 355, 357, 617
84 -816626A20 . . . . . 222, 352, 355, 357, 617
84 -816626A24 . . . . . 222, 352, 355, 357, 617
84 -816626A25 617
84 -816626A29 . . . . . 352, 355, 357, 617
84 -816626A30 617
84 -816626A 8 . . . . . 352, 355, 357, 617
14 -816629Q 1019
816667A 2 . . . . . 56, 364, 368, 706, 707, 707
816696A 1 . . . . . 59, 63
816696A10 . . . . . 60, 64, 64
816696A12 . . . . . 60, 63, 64
816696A 8 . . . . . 59, 64
816696A 9 . . . . . 59, 64
48 -816702A45 . . . . . 832, 848, 922, 984
48 -816704A45 . . . . . 832, 848, 922, 984
48 -816706A45 . . . . . 832, 848, 922, 984
33 -816737Q 7, 13, 14, 14, 14, 15, 15, 15, 16, 16, 17
33 -816837Q 8, 13, 14, 14, 14, 15, 15, 15, 16, 16, 17, 18
22 -816856Q 3 77
22 -816856T 3 77
817019Q 2 . . . . . 126, 392
817019T 2 . . . . . 126, 392
817275A09 . . . . . 234, 235
84 -817659T01 643
11 -817752A 1 1007
817782 1 626
817883 1 626
817891 1 626
817928 1 626
817929 1 626
22 -818170A 2 183
818298Q 1 . . . . . 104, 117, 118
818298T 1 . . . . . 104, 107, 107, 107, 108,

108,
108, 110,
111, 112,
112, 113,
113, 114,
114,
114, 115,
115, 230, 232, 233,
233, 234
818298T 3 . . . . . 104, 110, 112,
112, 113, 114,
114,
115, 230,
230, 232, 233, 234
818377A 2 203
818451A 2 202
92 -818651A 2 1052
92 -818651A 3 1052
92 -818651A 4 1052
62 -818701007 1051
62 -818701 4 1051
62 -818701 5 1051
92 -818702 1052
32 -818748A 1 . . . . . 175, 176,
176
818911 2 1013
43 -818928A 2 206
17 - 81900M 1014
819012 626
819013 626
819014 626
819015 626
819016 626
23 -819057 1019
23 -819058 1019
84 -819200T 1 636
819232 . . . . . 105, 118,
118
819429A 1 1024
819504A 2 . . . . . 35, 36
48 -820110A20 . . . . . 914, 982, 985
56 -820386A85 566
820503 1 225,
225,
225
22 -820543A 1 . . . . . 69, 222
22 -820543A 6 222
22 -820573 . . . . . 69, 222
25 -820663250 223
25 -820663375 223
25 -820663500 223
25 -820663A 2 223
820671A10 . . . . . 218, 556
820671A12 . . . . . 218, 556
820671A14 . . . . . 218, 556
820671A16 . . . . . 218, 556
820671A18 . . . . . 218, 556
820671A 8 . . . . . 218, 556
820675 . . . . . 219, 221, 558, 713
820677A 1 . . . . . 219, 558
820728 712
821085A 3 204
48 -821154A46 . . . . . 836, 837, 843, 860, 924, 936
821190A 1 57
821190A 2 57
821190A 3 57
18 - 82132M 1015
18 - 82134M 1015
821455A16 . . . . . 45, 51, 52
821455A17 . . . . . 45, 52
821455A20 . . . . . 44, 51
821455A22 . . . . . 44, 51, 52
821455A24 . . . . . 45, 52
821455A26 . . . . . 44, 51
821455T 8 . . . . . 44, 51
821468A 7 . . . . . 43, 50, 51
821629A 2 . . . . . 190, 196
821629Q 1 189
821629T 1 . . . . . 189, 196
821630A 2 . . . . . 190, 196
821630Q 1 190
821630T 1 . . . . . 190, 196
821631Q 1 189
821631T 1 . . . . . 189, 196
821631T 3 . . . . . 189, 196
48 -821719A56 . . . . . 838, 989, 993
48 -821720A56 . . . . . 838, 989, 993
19 -821908 . . . . . 69, 223
821932 1020
821932 1 . . . . . 996, 1020
3526-821986A 1 202
822157T03 232
822157T 2 . . . . . 103, 107,
107,
110, 111, 117
822344A11 . . . . . 28, 32
822344A12 . . . . . 29, 34
822344A13 . . . . . 28, 31,
31, 32,
32, 33
50 -822462A06 . . . . . 37, 42
50 -822462A 1 . . . . . 37, 42
50 -822462A 2 . . . . . 37, 42
50 -822462A 4 . . . . . 37, 42
43 -822535A 1 206
822559Q01 1005
822573A12 31,
31, 32,
32, 32, 33, 360, 503, 504,
504, 505,
505

35 -822626K03 . . . . . 95, 231, 232, 258, 258, 262, 355, 358, 361
35 -822626Q03 . . . . . 95, 297, 297, 298, 355, 358, 361
35 -822626Q15 . . . . . 96, 259, 298, 299
35 -822626T 7 . . . . . 95, 263
822777A 2 . . . . . 103, 192, 196
822777Q 1 . . . . . 103, 115, 192, 1023
822777T 1 . . . . . 103, 192, 196
92 -822825 1 286
23 -822974 1004
53 -822975 1005
87 -823037A04 628
823054 629
823054Q 629
48 -823478A46 . . . . . 816, 817, 827, 828, 833, 853
92 -823506 1 . . . . . 310, 334
23 -823516 1005
87 -823609A 7 . . . . . 38, 40, 41, 41
48 -823661A60 991
48 -823661L 991
48 -823662A60 991
48 -823662L 991
48 -823663A60 991
48 -823664A60 991
48 -823664L 991
48 -823665L 991
48 -823666A60 991
48 -823667A60 991
48 -823667L 991
48 -823669A60 991
48 -823669L 991
48 -823670A60 991
48 -823670L 991
33 - 82370M 1 . . . . . 5, 13, 18, 18, 19
33 - 82371M 5, 14, 15, 16, 17, 18, 18, 18, 19, 19, 19
33 - 82372M 6, 19, 19
823912 . . . . . 104, 105, 106, 108, 109, 109, 231
823912002 . . . . . 107, 232
823913Q 103, 107, 108, 231
824072A 3 . . . . . 59, 62, 62, 63
824072A 7 . . . . . 59, 62
33 -824406 8 . . . . . 8, 19
93 -824423 2 1031
19 -824431 1027
84 -824477A 3 . . . . . 39, 42
43 -824517A 1 206
824954A 1 . . . . . 91, 348
32 -825191A03 . . . . . 56, 57, 57, 348, 371, 375, 381, 385, 541, 542, 542
32 -825191A 2 203
825212A 1 . . . . . 87, 88, 364
825271 1 . . . . . 104, 107, 110, 111, 117
87 -825294A 2 . . . . . 39, 42
48 -825860A47 . . . . . 803, 804, 805, 806, 806, 814, 819, 823, 824, 825, 836, 843, 854
48 -825861A47 843
48 -825862A47 . . . . . 803, 804, 805, 806, 806, 814, 819, 823, 824, 825, 835, 843, 854, 924, 982, 994
48 -825863A47 843
48 -825864A47 . . . . . 803, 804, 805, 806, 814, 818, 819, 823, 824, 825, 835, 842, 854, 924
48 -825865A47 . . . . . 842, 854
48 -825866A47 . . . . . 806, 818, 819, 823, 835, 842, 854, 924
48 -825868A47 . . . . . 818, 835, 842, 854
48 -825870A47 . . . . . 835, 842
48 -825872A47 . . . . . 806, 818, 819, 823, 835, 842, 854
48 -825874A47 . . . . . 818, 835, 842, 854
48 -825898A48 . . . . . 836, 837, 843, 860
48 -825899A48 . . . . . 836, 837, 843, 860
48 -825900A48 . . . . . 836, 837, 843, 860
48 -825901A48 . . . . . 836, 837, 843, 860
48 -825902A48 . . . . . 836, 837, 843, 860
48 -825903A48 . . . . . 836, 837, 843, 860
48 -825907A48 . . . . . 843, 860
48 -825930A46 . . . . . 834, 836, 841, 843, 855
48 -825932A46 . . . . . 834, 836, 841, 843, 855
48 -825934A47 . . . . . 834, 836, 841, 843, 855
48 -825938A47 . . . . . 834, 836, 841, 843, 855
48 -825940A48 . . . . . 834, 836, 841, 843, 855
48 -825942A47 . . . . . 834, 836, 841, 843, 855
48 -825944A47 . . . . . 834, 836, 841, 843, 855
48 -825948A47 . . . . . 836, 841, 843
48 -826072A46 . . . . . 811, 822, 823, 835, 838, 842, 857
826074Q 1 . . . . . 996, 996, 997, 997, 1003
826134Q 105, 117, 118
826134T 105, 107, 107, 108, 108, 108, 108, 111, 112,

112, 113, 114, 114, 114, 115, 230, 232, 233, 234, 235
826134T 3 . . . . . 105, 112, 113, 114, 115, 115, 230, 232, 233, 233, 234, 235
64 -826449A 1 697
64 -826464 697
64 -826465 697
64 -826468A 1 696
64 -826470A 1 696
64 -826472A 1 696
64 -826472A10 689
64 -826472A11 689
64 -826472A12 689
64 -826472A13 689
64 -826472A14 689
64 -826472A15 689
64 -826472A16 689
64 -826472A17 689
64 -826472A18 689
64 -826472A19 689
64 -826472A 8 689
64 -826472A 9 689
64 -826483A 1 . . . . . 698, 700
64 -826484 . . . . . 698, 700
64 -826491A 1 . . . . . 698, 700
64 -826495A 1 703
64 -826496A 1 703
64 -826497A 1 . . . . . 698, 700
64 -826498A 1 . . . . . 699, 701
64 -826501A 1 697
64 -826507A 2 . . . . . 703, 704
64 -826511A 2 703
64 -826512A 2 . . . . . 703, 704
64 -826513A14 698
64 -826513A16 698
64 -826513A18 698
64 -826513A20 698
64 -826513A22 698
64 -826513A24 698
64 -826523 702
64 -826524 702
64 -826525A 1 703
64 -826532A 1 703
826557A 1 540
826633A 1 540
11 -826709 11 1012
11 -826711 12 1011
11 -826711 17 66
11 -826711 27 1013
826729A10 . . . . . 29, 33, 33
1686-827214T25 205
48 -827312A45 . . . . . 832, 848
91 -827497A 1 78
84 -827593A 2 635
827598T 996, 1024
11 -827614A 3 1010
11 -827614Q01 . . . . . 996, 1009
11 -827614Q04 1009
827691A 1 186
84 -827752A 1 508
82776 709
82779 . . . . . 555, 724
33 -827858Q 9, 11, 11, 11, 12, 12
33 -827859 . . . . . 9, 11
82795T 102, 116
828038A 1 . . . . . 24, 26
48 -828150A12 . . . . . 831, 846, 920, 966, 978
48 -828152A12 . . . . . 831, 846, 920, 966, 978
48 -828154A12 . . . . . 831, 846, 920, 966
828155A 3 89
828155A 4 89
828155A 6 89
828155A 8 89
48 -828156A12 . . . . . 831, 846, 920, 966, 978
48 -828158A12 . . . . . 831, 846, 920, 966, 978
91 -828363A 1 731
828369 . . . . . 98, 339
57 -828507Q 4 230
57 -828507Q 5 231
828517A 1 90
828813A 2 . . . . . 45, 52, 53
828813A29 . . . . . 45, 51, 52
33 -828942 . . . . . 9, 15
47 -828989T 1 1029
67 -829140A01 654
830578A 1 . . . . . 35, 36
91 - 83164M 733
48 -831867A60 991
48 -831867L 991
48 -831868A60 991
48 -831868L 991
48 -831909A45 . . . . . 837, 843, 861
48 -831909A55 . . . . . 836, 861
48 -831909A65 861
48 -831909L46 . . . . . 864, 881
48 -831909L65 . . . . . 864, 881
48 -831909L66 . . . . . 864, 881
48 -831910A45 . . . . . 837, 843, 861
48 -831910A55 . . . . . 836, 861
48 -831910A65 861
48 -831910L46 . . . . . 864, 881
48 -831910L60 . . . . . 862, 880
48 -831910L65 . . . . . 864, 881

48 -831910L66 . . . . . 864, 881
48 -831910L80 . . . . . 862, 880
48 -831911A45 . . . . . 837, 843, 861
48 -831911A55 . . . . . 836, 861
48 -831911A65 861
48 -831911L45 . . . . . 864, 881
48 -831911L46 . . . . . 864, 881
48 -831911L65 . . . . . 864, 881
48 -831911L66 . . . . . 864, 881
48 -831912A45 . . . . . 837, 843, 861
48 -831912A55 . . . . . 836, 861
48 -831912A65 861
48 -831912L45 . . . . . 864, 881
48 -831912L46 . . . . . 864, 881
48 -831912L60 . . . . . 862, 880
48 -831912L65 . . . . . 864, 881
48 -831912L66 . . . . . 864, 881
48 -831912L80 . . . . . 862, 880
48 -831913A45 . . . . . 837, 843, 861
48 -831913A55 . . . . . 836, 861
48 -831913A65 861
48 -831913L45 . . . . . 864, 881
48 -831913L46 . . . . . 863, 881
48 -831913L65 . . . . . 864, 881
48 -831913L66 . . . . . 864, 881
48 -831914A45 . . . . . 837, 843, 861
48 -831914A55 . . . . . 836, 861
48 -831914A65 861
48 -831914L45 . . . . . 864, 881
48 -831914L46 . . . . . 864, 881
48 -831914L60 . . . . . 862, 880
48 -831914L65 . . . . . 864, 881
48 -831914L66 . . . . . 864, 881
48 -831914L80 . . . . . 862, 880
48 -831915A55 . . . . . 836, 837, 843, 861
48 -831915A65 861
48 -831915L45 . . . . . 864, 881
48 -831915L46 . . . . . 863, 881
48 -831915L65 . . . . . 864, 881
48 -831915L66 . . . . . 863, 881
48 -831916A55 . . . . . 836, 837, 843, 861
48 -831916A65 861
48 -831916L45 . . . . . 864, 881
48 -831916L46 . . . . . 863, 881
48 -831916L60 . . . . . 862, 880
48 -831916L65 . . . . . 864, 881
48 -831916L66 . . . . . 863, 881
48 -831916L80 . . . . . 862, 880
48 -831917A55 . . . . . 836, 837, 843, 861
48 -831917A65 861
48 -831917L45 . . . . . 864, 881
48 -831917L65 . . . . . 864, 881
48 -831917L66 . . . . . 863, 881
48 -831918A55 . . . . . 836, 837, 843, 861
48 -831918A65 861
48 -831918L45 . . . . . 864, 881
48 -831918L60 . . . . . 862, 880
48 -831918L65 . . . . . 864, 881
48 -831918L66 . . . . . 863, 881
48 -831918L80 . . . . . 861, 880
48 -831919A55 . . . . . 836, 837, 843, 861
48 -831919A65 861
48 -831919L45 . . . . . 864, 881
48 -831919L65 . . . . . 864, 881
48 -831919L66 . . . . . 863, 881
48 -831920A55 . . . . . 836, 837, 843, 861
48 -831920A65 861
48 -831920L45 . . . . . 864, 881
48 -831920L65 . . . . . 864, 881
48 -831920L66 . . . . . 863, 881
832066A 1 70
48 -832121A55 . . . . . 836, 837, 843, 861
48 -832121A65 861
48 -832121L45 . . . . . 864, 881
48 -832121L65 . . . . . 864, 881
48 -832121L66 . . . . . 863, 881
48 -832122A55 . . . . . 836, 837, 843, 861
48 -832122A65 861
48 -832122L45 . . . . . 864, 881
48 -832122L65 . . . . . 864, 881
48 -832122L66 . . . . . 863, 881
48 -832123A55 . . . . . 836, 837, 843, 861
48 -832123A65 861
48 -832123L45 . . . . . 864, 881
48 -832123L65 . . . . . 864, 881
48 -832123L66 . . . . . 863, 881
48 -832124A55 . . . . . 836, 837, 843, 861
48 -832124A65 861
48 -832124L45 . . . . . 864, 881
48 -832124L65 . . . . . 864, 881
48 -832124L66 . . . . . 863, 881
48 -832828A45 . . . . . 805, 806, 807, 812, 813, 814, 819, 824, 825, 834, 837, 841, 849, 924, 975, 988, 994
48 -832830A45 . . . . . 805, 806, 807, 812, 813, 814, 819, 824, 825, 834, 837, 841, 849, 924, 987, 994
48 -832832A45 . . . . . 805, 807, 812, 814, 819, 825, 834, 837, 841, 849, 924, 975, 987, 987, 987, 994
48 -832834A45 . . . . . 807, 814, 819, 825, 834, 836, 841, 849, 924, 975, 987, 987, 994
88 -832969 10 651
88 -832969 2 651
88 -832969 30 651
88 -832969T05 651
88 -832969T15 651
88 -832969T20 651
88 -832969T25 651

833006A 1 . . . . . 36, 349, 381
833072003 230
833072004 230
833163A 1 . . . . . 224, 225
83394M 102, 106, 116, 116, 116
17 - 83443M 1014
12 - 83447M 1017
834839Q 997, 1003
48 -834850A45 . . . . . 835, 837, 842, 851, 924
48 -834851A45 . . . . . 835, 837, 842, 851, 924
48 -834852A45 . . . . . 835, 837, 842, 851, 924
48 -834853A45 . . . . . 835, 837, 842, 851, 924
48 -834854A45 . . . . . 834, 837, 842, 851, 924
48 -834855A45 . . . . . 834, 837, 842, 851, 924
834899Q 1004
835257K 1 . . . . . 996, 998
835257K10 . . . . . 996, 998
835257K12 997
835257K 6 . . . . . 996, 998
835257K 9 . . . . . 996, 998
835257Q12 997
835258K 1 . . . . . 996, 999
835258K 2 . . . . . 996, 999
835265Q02 . . . . . 997, 1000
835266Q 1 . . . . . 997, 1000
835267Q 1 . . . . . 997, 1000
835270Q 1 . . . . . 997, 1001
835271Q09 1002
835271Q 2 . . . . . 996, 1002
835272Q09 1002
835272Q 1 . . . . . 996, 1002
835274Q 1 . . . . . 996, 1002
835277Q 1 . . . . . 997, 999
835278A 1 1022
835278Q 1 . . . . . 997, 1000
835279Q 2 . . . . . 997, 999
835281Q 1 . . . . . 997, 1001
835282Q 1 . . . . . 997, 1001
835283Q03 . . . . . 997, 1001
835283Q 1 . . . . . 997, 1000
835283Q 2 . . . . . 997, 1001
835284Q 1 . . . . . 997, 1001
835290Q 1 . . . . . 996, 996, 997, 1003
84 -835359A 1 508
47 -835452T 1029
64 -835457A11 . . . . . 221, 712
64 -835457A13 . . . . . 221, 712
64 -835457A15 . . . . . 221, 712
64 -835457A17 . . . . . 221, 712
64 -835457A19 . . . . . 221, 712
64 -835457A21 . . . . . 221, 712
64 -835457A23 . . . . . 221, 712
64 -835457A25 . . . . . 221, 712
12 -835467008 997
12 -835467 5 . . . . . 996, 1021
12 -835467 7 1022
12 -835467Q01 . . . . . 996, 997, 1021
83859T 102, 116, 116, 116, 116
83872M 1024
37 -840323A 1 198
37 -840323A10 198
37 -840323A11 198
37 -840323A12 198
37 -840323A13 198
37 -840323A15 198
37 -840323A16 198
37 -840323A18 198
37 -840323A20 198
37 -840323A 5 198
37 -840323A 6 198
37 -840323A 7 198
37 -840323A 8 198
840368A 1 202
44 -840377A 1 217
840382A02 1004
12 -840383A 2 1010
840389K06 . . . . . 996, 999
91 -840393A 1 217
44 -840450A03 199
44 -840451A03 199
1687-840560A27 204
1687-840560A28 204
1687-840560A29 204
1687-840560A38 204
1687-840560T33 204
1687-840560T34 204
1687-840560T35 204
1687-840560T37 204
1687-840561A27 205
1687-840561A28 205
1687-840561A29 205
1687-840561A35 205
1687-840561A37 205
1687-840561A38 205
1687-840561A63 205
1687-840561A64 205
1687-840561A65 205
1687-840561T33 205
1687-840561T34 205
1687-840561T36 205
1687-840561T69 205
1687-840561T70 205
1687-840561T71 205

35 -840634K01 265
840714A 1 383
840714A24 383
840716A19 383
840716A 2 383
43 -840870A 1 206
43 -840898A 3 206
840988A 1 204
84125T 21, 22, 22, 22, 22, 23, 350
841944A02 728
841945A02 728
842049A01 214
842049A02 214
842049A03 214
842049A04 214
842049A06 214
842049A08 214
842064A02 213
842109A01 . . . . . 210, 728
32 -842756T01 . . . . . 56, 203
842768A05 728
48 -842939L70 . . . . . 871, 884
48 -842940L70 . . . . . 871, 884
48 -842941L70 . . . . . 871, 884
48 -842941L80 . . . . . 871, 884
48 -842942L70 . . . . . 871, 884
48 -842942L80 . . . . . 871, 884
48 -842943L70 . . . . . 871, 884
48 -842943L80 . . . . . 871, 884
48 -842944L70 . . . . . 871, 884
48 -842944L80 . . . . . 871, 884
48 -842945L70 . . . . . 871, 884
48 -842945L80 . . . . . 871, 884
48 -842946L70 . . . . . 871, 884
48 -842946L80 . . . . . 871, 884
843042T03 208
843122T01 204
33 -843220Q 9, 17, 18, 231
843426A 1 . . . . . 132, 207, 391
843426A 2 . . . . . 132, 207
843434A 1 . . . . . 132, 207, 391
843434A 2 . . . . . 132, 208
32 -843556A 1 729
32 -843675A 1 729
843946T 207
844399T01 215
844461A30 530
844461A50 530
844461A60 530
844461A70 530
844461A80 530
844461A90 530
844464A30 531
844464A50 531
844464A60 532
844464A70 532
844464A80 532
844464A90 532
844466A30 533
844466A50 533
844466A60 533
844466A70 533
844466A80 533
844466A90 533
844469A30 534
844469A50 534
844629A30 530
844629A50 530
844630A31 530
844630A51 531
844630A52 531
844630A61 531
844630A62 532
844630A71 531
844630A72 532
844630A81 531
844630A82 532
844630A91 532
844630A92 532
844631A30 531
844631A50 531
844632A31 533
844632A32 534
844632A33 533
844632A51 533
844632A52 534
844632A53 533
844632A61 535
844632A62 535
844632A63 534
844632A71 535
844632A72 535
844632A73 534
844632A81 535
844632A82 535
844632A83 534
844632A91 535
844632A92 535
844632A93 534
844633A30 533
844634A31 536
844634A32 536
844634A51 535
844634A52 535
844634A61 536
844634A62 536
844634A64 536

844634A71 536
844634A72 536
844634A74 536
844634A81 536
844634A82 536
844634A83 536
844634A84 536
844634A91 536
844634A92 536
844634A93 536
844634A94 536
844635A30 534
844635A50 534
844944A 1 . . . . . 512, 514, 727
844944A 6 . . . . . 512, 514, 727
844945A 1 . . . . . 512, 514, 727
844945A 6 . . . . . 512, 514, 727
845263A 1 1031
845313A 1 . . . . . 511, 514, 726, 727
845313A 6 . . . . . 511, 514, 726, 727
845314A 6 . . . . . 511, 514, 726, 727
845457A 1 . . . . . 513, 514, 727
845457A 6 . . . . . 513, 514, 727
845532A02 729
845532A 1 729
845630A02 729
845630A 1 729
845765A 6 . . . . . 511, 514, 726, 727
845766A 6 . . . . . 512, 514, 727
32 -845976 729
32 -845977 729
845982A 6 513
845983A 1 . . . . . 512, 514, 727
845983A 6 . . . . . 512, 514, 727
32 -846051 729
846063A 1 513
846066A 1 513
846562A 1 205
846563A 1 205
846564A 1 205
846743A 1 205
846744A 1 205
846745A 1 205
33 - 84675M 6, 13, 18
846793A 1 513
846860T 1 728
45 -846870A 1 217
84 - 84711M 616
847314A 1 1031
84732M 106, 116
45 -847633A 1 217
847635 . . . . . 192, 196
847788A 1 203
848045A 7 202
4007-848164T 3 198
4006-848290A17 198
848444A 6 . . . . . 511, 514, 726, 727
848445A 1 . . . . . 511, 514, 726, 727
848445A 6 . . . . . 511, 514, 726, 727
848653T 196
848703A 1 . . . . . 69, 204
32 -848789 730
43 -848855T 2 205
848924A 5 537
848924A 6 537
848924A 7 537
848924A 8 537
848998A 1 . . . . . 70, 204
91 -849154T 1 200
43 -849189T 2 205
48 -849242L62 . . . . . 874, 879
48 -849243L62 . . . . . 874, 879
48 -849244L62 . . . . . 874, 879
48 -849245L62 . . . . . 874, 879
48 -849246L62 . . . . . 874, 879
48 -849247L62 . . . . . 874, 879
48 -849248L62 . . . . . 874, 879
48 -849356A62 . . . . . 873, 878
48 -849357A62 . . . . . 873, 878
48 -849358A62 . . . . . 873, 878
48 -849359A62 . . . . . 873, 878
34 -849484A 1 201
849492T01 1031
849493T01 1031
849496T05 200
23 -849501Q 1 1004
849505 1 1031
48 -849506L62 . . . . . 874, 879
48 -849507L62 . . . . . 874, 879
48 -849508L62 . . . . . 874, 879
48 -849509L62 . . . . . 874, 879
37 -849850A 1 198
849906A14 214
849996T 1 . . . . . 170, 204
850000A 2 . . . . . 47, 52
850000A 3 . . . . . 47, 53, 54, 54
850000A 4 . . . . . 47, 51
850005A 2 . . . . . 222, 713
43 -850034T 66
850055A 2 . . . . . 87, 88, 88
12 -850076 . . . . . 996, 1016
48 -850204A12 920
850330Q 997, 1004
91 -850438 1 338
35 -850481 183
850697A 2 . . . . . 219, 222, 558, 713
850698A 1 . . . . . 218, 530
850699 . . . . . 220, 711

850700A07 . . . . . 28, 30, 30, 32, 352, 353
850700A08 . . . . . 28, 30, 31, 31, 32
32 -850719 93
91 -850730Q 1 322
84 -850782 636
850821Q11 . . . . . 996, 1003
850821Q12 1003
851052Q 470, 474, 591
64 -851621A10 696
64 -851621A11 696
64 -851621A12 696
64 -851621A13 696
64 -851621A14 696
64 -851621A15 696
64 -851621A16 696
64 -851621A17 696
64 -851621A18 696
64 -851621A19 696
64 -851621A20 696
64 -851621A 8 696
64 -851621A 9 696
64 -851622A 1 691
64 -851622A10 691
64 -851622A11 691
64 -851622A12 691
64 -851622A13 691
64 -851622A14 691
64 -851622A15 691
64 -851622A16 691
64 -851622A17 691
64 -851622A18 691
64 -851622A19 691
64 -851622A20 691
64 -851625A 1 699
67 -851691 650
67 -851706 650
67 -851710 650
67 -851730 649
67 -851734 649
67 -851737 649
67 -851760 649
67 -851761 649
67 -851762 649
67 -851764 649
67 -851765 649
67 -851766 649
67 -851767 649
67 -851768 649
67 -851773 650
67 -851794 650
67 -851796 650
67 -851798 650
64 -851831A 1 691
398 -852387A 6 20
22 -852400 70
62 -852870A02 1047
62 -852871A02 1047
62 -852872A04 1047
62 -852873A02 1047
62 -852874 3 1048
852962T 223
12 -853359 . . . . . 997, 1022
12 -853555 . . . . . 996, 1023
64 -853690A 1 699
853762 . . . . . 107, 232
853762T01 . . . . . 106, 107, 231
853783A05 . . . . . 58, 62, 353
853783A06 . . . . . 58, 61, 62, 353
853792A07 232
853824A04 . . . . . 356, 358, 705, 706
12 -853948T 996, 997, 1023
64 -853951A10 . . . . . 218, 556
64 -853951A12 . . . . . 218, 556
64 -853951A14 . . . . . 218, 557
64 -853951A16 . . . . . 218, 557
64 -853951A18 . . . . . 218, 557
67 -854274 650
48 -854340A33 . . . . . 833, 841, 848
48 -854340A45 . . . . . 816, 817, 833, 840, 849
48 -854342A33 . . . . . 833, 841, 848
48 -854342A45 . . . . . 815, 816, 817, 833, 840, 849
48 -854342CP1 . . . . . 833, 840, 849
48 -854352A45 . . . . . 807, 808, 814, 815, 816, 817, 825, 826, 827, 828, 833, 840, 848
48 -854354A46 . . . . . 807, 808, 813, 814, 815, 819, 824, 825, 826, 834, 841, 853
48 -854360A45 . . . . . 807, 808, 814, 815, 816, 819, 825, 826, 827, 833, 840, 848
12 -854621 . . . . . 997, 1023
47 -854670T 1029
854810T 1 223
19 -855267A 1 1028
84 -855390 606
855514002 242
855654A 6 . . . . . 29, 31
855676002 . . . . . 231, 232
855676005 231
855676A 1 . . . . . 87, 88, 232
47 -855708115 1029
47 -855708T25 1028
47 -855708T40 1028
47 -855708T60 1029
48 -855856A46 . . . . . 816, 817, 827, 828, 833, 853, 922, 980, 984

48 -855858A46 . . . . . 809, 816, 817, 827, 828, 832, 853, 922, 980, 984
48 -855860A46 . . . . . 809, 816, 817, 827, 828, 832, 852, 922, 980, 984
48 -855862A46 . . . . . 809, 816, 817, 827, 828, 832, 852, 922, 980, 984
856116A 1 86
23 -856163Q 1 . . . . . 996, 1004
48 - 85632A45 . . . . . 816, 817, 818, 827, 828, 829, 832, 848, 922, 980, 984
856537A 5 . . . . . 42, 50
856553A 2 540
84 -856554A02 . . . . . 353, 356, 539
84 -856554A 1 . . . . . 39, 40, 41
50 -856555A 1 . . . . . 38, 40, 41
87 -856556A 2 . . . . . 38, 40, 41
856557A 1 20
856558A 2 . . . . . 25, 26, 27
856581C 224, 225, 225
856627T 3 223
856642A 2 90
62 -856646A 1 1056
87 -856654A 2 628
87 -856654A 4 628
48 -857022A46 . . . . . 803, 804, 809, 810, 811, 820, 821, 822, 836, 838, 843, 858
48 -857024A46 . . . . . 803, 804, 809, 810, 811, 820, 821, 822, 836, 838, 843, 858, 924
48 -857025A46 . . . . . 809, 810, 811, 820, 821, 822, 836, 838, 843, 858, 924
48 -857026A46 . . . . . 803, 804, 809, 810, 811, 820, 821, 822, 836, 838, 843, 858, 924
48 -857026L55 . . . . . 859, 882
48 -857027A46 . . . . . 809, 810, 811, 820, 821, 822, 836, 838, 843, 858, 924
48 -857027L55 . . . . . 859, 882
48 -857028A46 . . . . . 803, 804, 809, 810, 811, 820, 821, 822, 836, 838, 843, 858, 924
48 -857028L55 . . . . . 859, 882
48 -857029A46 . . . . . 809, 810, 811, 820, 821, 822, 836, 838, 843, 858, 925
48 -857029L55 . . . . . 859, 882
48 -857030A46 . . . . . 803, 804, 809, 810, 811, 820, 821, 822, 836, 838, 843, 858, 924
48 -857030L55 . . . . . 860, 882
48 -857031A46 . . . . . 809, 810, 811, 820, 821, 821, 822, 836, 838, 843, 858, 925
48 -857031L55 . . . . . 859, 882
48 -857032A46 . . . . . 803, 804, 809, 810, 811, 820, 821, 822, 836, 838, 843, 858
48 -857032L55 . . . . . 860, 882
48 -857033A46 . . . . . 809, 810, 811, 820, 821, 821, 822, 836, 838, 843, 858
48 -857033L55 . . . . . 860, 882
35 -858004K 264
35 -858004Q 303
92 -858005K02 333
92 -858006K02 330
92 -858007K01 . . . . . 278, 279
92 -858007Q01 . . . . . 317, 318
92 -858008K01 . . . . . 278, 280
92 -858008Q01 . . . . . 317, 319
92 -858020K01 . . . . . 250, 252
92 -858020Q01 . . . . . 289, 291
92 -858021K01 . . . . . 250, 252
92 -858021Q01 . . . . . 289, 291
92 -858022K01 . . . . . 250, 252
92 -858022Q01 . . . . . 289, 291
92 -858022Q41 249
92 -858023K01 . . . . . 250, 252
92 -858023Q01 . . . . . 289, 291
92 -858024Q01 . . . . . 250, 252, 289, 291
92 -858025K01 . . . . . 250, 251
92 -858025Q01 . . . . . 289, 290
92 -858026K01 . . . . . 250, 251
92 -858026Q01 . . . . . 289, 290
92 -858027K01 . . . . . 250, 251
92 -858027Q01 . . . . . 289, 290
92 -858027Q51 249
92 -858028K01 . . . . . 250, 252
92 -858028Q01 . . . . . 289, 291
92 -858029Q01 . . . . . 250, 252, 289, 291
92 -858037K01 . . . . . 250, 251
92 -858037Q01 . . . . . 289, 290
92 -858038K01 . . . . . 250, 251
92 -858038Q01 . . . . . 289, 290
92 -858039Q01 . . . . . 250, 251, 289, 290
92 -858042K01 266
92 -858042Q01 . . . . . 304, 305
92 -858043Q01 . . . . . 266, 304, 305
92 -858058K01 278
92 -858058Q01 317
92 -858059K01 . . . . . 278, 279
92 -858059Q01 . . . . . 317, 318
92 -858061Q01 . . . . . 278, 279, 317, 318
92 -858062Q01 . . . . . 278, 279, 317, 318
92 -858064K01 . . . . . 278, 280
92 -858064Q01 . . . . . 317, 319
92 -858065K01 . . . . . 278, 280
92 -858065Q01 . . . . . 317, 319
92 -858067Q01 . . . . . 278, 280, 317, 319
92 -858068Q01 . . . . . 278, 280, 317, 319
92 -858074K01 288
92 -858074Q01 329
92 -858075K01 288

92 -858075Q01 329
92 -858076K01 . . . . . 288, 664
92 -858077K01 . . . . . 288, 664
92 -858078Q01 . . . . . 329, 683
92 -858080K03 276
92 -858080Q03 316
92 -858081K03 272
92 -858081Q03 310
92 -858092A01 253
92 -858093A01 253
92 -858119Q01 . . . . . 292, 295
858342A10 . . . . . 219, 557, 725
858342A12 . . . . . 219, 557, 725
858342A14 . . . . . 219, 557, 725
858342A16 . . . . . 219, 557, 725
858342A18 . . . . . 219, 557, 725
858342A20 . . . . . 219, 557, 725
858342A22 . . . . . 219, 557, 725
858342A 8 . . . . . 219, 557, 725
858498 . . . . . 996, 1020
858566A02 . . . . . 69, 344
858566A03 . . . . . 69, 371
858566A 1 69
84 -858740T06 611
858915A 1 . . . . . 35, 349
62 -859007004 1049
62 -859007009 1049
62 -859008 1051
62 -859008003 1050
62 -859008 1 1051
92 -859026K 1 287
62 -859044A 1 1056
91 -859046M 1 1030
91 -859046M 2 1030
91 -859046M 3 1030
91 -859046M 4 1031
91 -859046Q 1 1030
91 -859046Q 2 1030
91 -859046Q 3 1030
91 -859046Q 4 1031
32 -859055 5 . . . . . 56, 542
32 -859055 50 . . . . . 56, 542
11 -859073 452
11 -859073B 1 452
859074 1 . . . . . 414, 450
859074 2 . . . . . 414, 451
859074 3 . . . . . 414, 451
859074B 1 . . . . . 414, 450
859074B 2 . . . . . 414, 451
859074B 3 . . . . . 414, 451
11 -859131 1013
859173 . . . . . 996, 1025
859185A04 541
859185A 1 540
859185A 2 541
859186A 1 540
859187A 1 . . . . . 503, 506
859210A 1 594
859219A 1 541
859223001 592
859223A01 592
859223B21 592
84 -859316T 1 . . . . . 586, 601
859318B 1 . . . . . 585, 632
859318B 2 . . . . . 584, 631
859318T 1 . . . . . 585, 632
859318T 2 . . . . . 584, 631
859388A 1 224
859389A 1 224
859447A 1 . . . . . 94, 1027
859495Q 9, 12
859648A 2 . . . . . 453, 596
859649A 2 . . . . . 453, 597
23 - 85964A 1 1020
12 -859656 453
79 -859675A11 . . . . . 464, 465
79 -859691A 3 347
79 -859697K 2 507
79 -859698A 1 508
32 -859717A 2 . . . . . 98, 338, 371, 374
84 -859743T04 590
859818 1026
859825 1026
859834 1026
859871 1007
859873 1007
859878 1007
859879 1007
859891 . . . . . 1016, 1022
859908 1018
859915 . . . . . 997, 1022
859929 . . . . . 997, 1013
859939 . . . . . 996, 997, 997, 1013
859946 1011
22 -860099001 . . . . . 128, 128, 128
860315A 1 160
860427A 4 . . . . . 157, 165, 166, 168
860427A 5 . . . . . 158, 166, 167, 168, 168
860427A 7 . . . . . 158, 166
35 -860603 . . . . . 184, 392
84 -860615002 606
84 -860616002 606
84 -860617 636
84 -860618 603
84 -860622 606
84 -860623 606

84 -860624 606
84 -860625 606
861014 464
32 -861070T 160
90 - 86147A 1 1030
861481A 2 . . . . . 393, 710
861505A 1 . . . . . 168, 392
861557A 1 . . . . . 175, 175
32 -861590A05 168
861637A 2 157
861659A04 . . . . . 663, 710
92 - 86166Q 1 330
861776A 2 . . . . . 133, 391
22 -861932A 1 169
33 -862029 . . . . . 120, 121, 121, 122, 123, 123, 238
57 -862054Q 238
22 -862210A01 156
862250 697
862264A 7 178
862268A 4 172
862354A04 144
862548A 1 30
862646 651
862647 652
862772A28 . . . . . 171, 172
35 -862889 . . . . . 268, 307
11 -862907 1013
46 -862914A06 . . . . . 160, 162, 162, 163, 165, 166, 166
862974A05 144
862974A06 144
863124A02 144
863187A 2 591
863188A 3 599
863188A 5 599
863188T 4 599
863208A 3 . . . . . 184, 205
863330A 2 136
33 -863622001 . . . . . 120, 124, 242
32 -863642 339
863674A05 . . . . . 159, 162
863678 732
863714T01 143
84 -863736T 598
84 -863737T 598
863868A 1 711
863914A02 . . . . . 171, 172
84 -863931A 1 599
84 - 86396A24 635
84 - 86396A 8 . . . . . 354, 356, 635
864186A04 709
864186A 1 709
864206A02 184
864206A03 184
84 -864218 599
45 -864286A 1 . . . . . 172, 173
864306A 2 . . . . . 139, 146
864306A 3 . . . . . 139, 146
864306A 4 . . . . . 139, 146
864306A 5 . . . . . 139, 146
864493 . . . . . 238, 239, 240, 241, 241, 242
84 -864553T 599
35 -864572 178
35 -864572A 1 . . . . . 178, 392
864908A06 . . . . . 140, 148, 149
864908A07 . . . . . 140, 148, 149
864908A 1 . . . . . 140, 148, 148, 149
864908A 2 . . . . . 140, 148, 149
864920A02 . . . . . 157, 162, 162, 162, 163, 163, 163, 163, 163, 164, 164, 164
864929A 1 . . . . . 139, 146
864929A 2 . . . . . 139, 146
864929A 3 . . . . . 139, 146, 146
864929A 4 . . . . . 139, 146
864957 172
84 -864988 590
864990A 1 . . . . . 174, 392
864990A 2 . . . . . 173, 174, 392
865001T01 162
865003T03 162
865005T03 163
865006T04 164
865008T04 164
865009T04 164
32 -865022A 1 . . . . . 141, 146, 147, 148
32 -865024A 1 . . . . . 141, 145, 146
32 -865027A 1 . . . . . 141, 146
32 -865029A 1 . . . . . 141, 145, 146
32 -865033A 1 . . . . . 141, 147, 148
32 -865035A 1 . . . . . 141, 147, 149
32 -865039A02 160
32 -865039A 1 . . . . . 142, 147, 148, 148, 149, 160, 162, 162,

162, 163, 163, 163, 163, 164, 164, 163, 164, 164
32 -865041A 1 . . . . . 142, 147, 149
32 -865043A 1 . . . . . 142, 145, 146, 147, 148
32 -865090A01 . . . . . 161, 162, 162
865182A02 . . . . . 191, 193, 196
865182Q01 . . . . . 190, 193, 196
865188T01 161
32 -865277A02 . . . . . 176, 177
32 -865278A03 . . . . . 176, 177
32 -865278A04 177
32 -865281A02 177
32 -865384A01 644
865436A03 243
1589-865440H56 206
865585A02 . . . . . 126, 392
57 -865615Q02 128
57 -865615Q03 . . . . . 159, 238, 239, 240, 241
57 -865615Q04 . . . . . 238, 239, 240
57 -865615Q05 241
57 -865615Q06 . . . . . 240, 241
57 -865615Q07 . . . . . 128, 159
57 -865615Q08 . . . . . 128, 159, 238, 239, 240, 241
57 -865615Q09 . . . . . 128, 159, 238, 239, 240
57 -865615Q10 241
57 -865635Q01 242
57 -865635Q02 242
84 -865770A02 644
84 -865771A02 644
84 -865772T01 643
84 -865772T02 644
865831T06 162
865831T07 162
865831T08 162
865833T05 162
865833T06 162
865833T07 162
865835T03 162
865837T02 162
865839T03 163
865841T02 163
865846T02 164
865949A01 . . . . . 143, 147
865995A01 . . . . . 138, 145
865996A01 . . . . . 138, 145
32 -865998A01 . . . . . 141, 147, 148, 161
866000A01 . . . . . 142, 145
866001A01 . . . . . 142, 146
866002A01 . . . . . 143, 148
866003A01 . . . . . 143, 145
866004A01 . . . . . 143, 146
866005A01 . . . . . 143, 148
866007A01 . . . . . 138, 145
866123T05 163
866123T06 163
866125T05 163
866125T06 163
866127T04 164
866127T05 164
866130T05 . . . . . 163, 164
866130T06 164
866132T05 164
866132T06 164
866190T06 162
866190T07 162
866192T05 162
866192T06 162
866208A02 . . . . . 140, 147, 147
866208A03 . . . . . 140, 147, 147
866209A01 . . . . . 143, 147
866237T04 162
866239T04 163
866241T06 164
866243T05 . . . . . 163, 164
866245T06 164
84 -866337T01 . . . . . 391, 611
35 -866340K01 . . . . . 238, 239, 239, 240, 241, 242, 264
35 -866340Q03 303
84 -866377T01 611
91 -866590A02 731
35 -866594K01 . . . . . 180, 238
35 -866594Q01 180
866698 . . . . . 189, 196
84 -866704T01 639
866814A01 . . . . . 502, 591
23 - 86918T 1015
84 - 86939A 2 . . . . . 25, 26, 27
45 - 86978A 3 . . . . . 171, 217
86 - 87223T 647
1257- 8742A21 . . . . . 90, 455, 597
1257- 8742A22 . . . . . 91, 455, 597
1257- 8742A23 . . . . . 91, 455, 597
1257- 8742A24 455
1257- 8742A25 . . . . . 90, 344, 455
875208 . . . . . 106, 107, 109, 231
875266A 2 . . . . . 56, 57, 542, 542
35 -875284T01 230

87715T 1006
47 -877326T 1029
35 -877565T 1 79
877581A 2 219
877581A 4 . . . . . 221, 712
877581A 5 . . . . . 219, 558
35 -877761K01 . . . . . 96, 233, 234, 258, 259, 262, 371, 378
35 -877761Q01 . . . . . 96, 297, 298, 299, 371
35 -877767K01 . . . . . 96, 234, 259, 263, 381
35 -877767Q01 . . . . . 96, 298, 299, 381
35 -877769K01 . . . . . 96, 234, 235, 259, 259, 263, 385
35 -877769Q01 . . . . . 96, 298, 299, 385
92 -877770K 1 273
92 -877770Q 1 311
877775A11 . . . . . 380, 383
877775A12 . . . . . 380, 383
877775A19 . . . . . 380, 383
877775A21 383
877775A23 383
877775A26 517
877775K17 383
877775K31 . . . . . 379, 383
877775K35 383
877775K48 . . . . . 379, 383
878147A03 224
878148A03 224
48 - 87818A45 . . . . . 817, 818, 827, 828, 829, 832, 848, 922, 980, 984
91 -878373 338
91 -878375 338
878421 1004
878492B14 . . . . . 584, 631
878492B16 . . . . . 584, 631
878492K14 . . . . . 584, 631
878492K16 . . . . . 584, 631
878492K18 . . . . . 584, 631
878492T14 . . . . . 584, 631
878492T16 . . . . . 584, 631
878492T18 . . . . . 584, 631
48 -878612A46 . . . . . 809, 827, 828, 833, 856
48 -878614A46 . . . . . 809, 827, 828, 833, 856
48 -878616A46 . . . . . 809, 827, 828, 833, 856
879143 997
879147T94 125
84 -879148T41 579
879150054 . . . . . 242, 243
84 -879150A33 579
879150A88 . . . . . 60, 63, 64, 368
879154001 498
879154002 498
879154003 498
879154005 498
879155001 497
879155002 497
879155003 498
879155005 498
879156001 498
879156002 498
879156003 499
879156005 499
79 -879169K11 448
79 -879169K13 436
79 -879169K14 441
84 -879171T01 595
84 -879171T02 595
84 -879171T03 595
84 -879171T04 595
84 -879171T05 595
84 -879171T06 595
84 -879171T07 595
84 -879171T08 595
84 -879171T09 595
84 -879171T10 595
84 -879171T11 595
84 -879171T21 595
84 -879171T22 595
84 -879171T23 595
35 -879172104 . . . . . 182, 242
57 -879172120 242
35 -879172143 242
32 -879172A16 . . . . . 160, 162, 163, 163, 163, 164, 164
32 -879172A17 . . . . . 160, 164, 164
91 -879172T28 . . . . . 277, 314
879172T80 163
84 -879172T85 . . . . . 559, 581
84 -879172T86 . . . . . 559, 581
84 -879172T90 580
62 -879179 1044
62 -879180 1044
62 -879182 1044
62 -879184A02 1056
47 -879194186 243
879194217 . . . . . 194, 197, 242, 242, 243
30 -879194A00 . . . . . 125, 216
879194T17 163
879194T39 163
879194T41 164
879194T44 163
879194T73 163
879194T79 125
879194T80 125

879194T83 162
879194T85 162
879194T87 163
879194T89 163
879194T91 164
879194T97 164
879194T99 163
879273A01 710
879273A02 710
879288A02 . . . . . 157, 162
879288A03 . . . . . 129, 131
879288A12 134
879288A13 . . . . . 134, 154, 156, 392
879288A14 . . . . . 134, 155, 156, 392
879288A15 . . . . . 135, 155, 156, 392
879288A16 . . . . . 135, 155, 156, 392
879288A28 . . . . . 155, 156
879288A32 . . . . . 150, 156
879288A35 . . . . . 150, 155, 156
879288A36 . . . . . 150, 155, 156
879288A37 . . . . . 150, 155, 156
879288A38 . . . . . 150, 156
879288A39 . . . . . 158, 162, 163, 163, 163, 164, 164, 164
879288A40 . . . . . 169, 393
879288T03 163
879288T62 157
879288T82 . . . . . 151, 154, 156
879288T83 . . . . . 151, 154, 156
879288T84 . . . . . 152, 154, 156
879288T91 163
879288T93 163
879288T95 164
879288T99 164
879291A04 . . . . . 48, 52, 53, 367, 656
879291A05 . . . . . 49, 52, 53, 367, 656
879292001 . . . . . 467, 472, 481, 489, 496
879292002 . . . . . 467, 472, 481, 489, 496
879292003 496
879292004 496
879292005 496
879292007 497
879292008 497
879292009 496
879292012 499
79 -879292A01 . . . . . 351, 354, 357, 360, 467, 480, 495
79 -879292A02 . . . . . 351, 354, 357, 360, 472, 489, 495
79 -879292A03 495
79 -879292A04 495
79 -879292A05 496
879292A08 496
79 -879292A09 497
79 -879292A10 497
79 -879292K11 497
879296T01 592
879296T02 593
87 -879302A01 620
87 -879302A02 620
87 -879302A03 620
87 -879302A04 620
87 -879302A05 621
87 -879303A02 638
87 -879303A03 638
87 -879303A04 638
879305A01 . . . . . 381, 384, 616
47 -879312025 242
35 -879312041 . . . . . 242, 267, 306
84 -879312T08 581
84 -879312T09 579
84 -879312T10 578
84 -879312T11 578
84 -879312T12 . . . . . 570, 578
84 -879312T13 578
84 -879312T20 581
84 -879312T21 581
84 -879312T22 581
84 -879312T23 579
35 -879312T25 265
84 -879312T44 . . . . . 587, 608
84 -879312T45 . . . . . 587, 608
879312T46 . . . . . 587, 608
84 -879312T47 . . . . . 587, 608
84 -879312T77 571
84 -879312T78 571
84 -879312T79 571
84 -879312T80 571
84 -879312T81 571
84 -879312T82 571
84 -879312T83 571
879315T01 621
879315T02 621
879315T03 621
879315T04 621
879315T05 638
879315T07 638
879315T08 638
879315T09 638
62 -879317A01 1044
84 -879345T61 580
84 -879345T62 580
84 -879345T63 580
84 -879345T64 580
879346A58 347
879346T24 . . . . . 652, 663
879346T60 596
879355T80 164
879355T82 163

879365A21 559
35 - 87946K04 79
879634 223
64 -879686 . . . . . 221, 712
62 -879784A03 1047
62 -879785A03 1047
62 -879786A03 1047
62 -879787A05 1047
62 -879788A05 1047
62 -879789A05 1048
62 -879790A05 1047
879871 1 . . . . . 422, 451
879871 2 . . . . . 422, 451
879871B 1 . . . . . 422, 451
879871B 2 . . . . . 422, 451
879872 1 . . . . . 425, 451
879872 2 . . . . . 425, 451
879872 3 . . . . . 425, 451
879872B 1 . . . . . 425, 451
879872B 2 . . . . . 425, 451
879872B 3 . . . . . 425, 451
35 -879884T 80, 232, 360
35 -879885K 232, 233, 234, 235, 235, 374
35 -879885Q 80, 234, 363, 367, 370, 378, 381, 385
879895 1 435
79 -879896K19 . . . . . 347, 366, 369, 373, 380, 384, 389, 435
79 -879896K21 . . . . . 347, 366, 369, 373, 380, 384, 389, 435
11 -879900 452
11 -879900B 1 452
11 -879902 453
79 -879903K 1 440
79 -879903K11 446
79 -879903K21 450
79 -879904K 1 440
79 -879904K11 446
79 -879905K 1 440
79 -879905K11 446
79 -879905K21 450
79 -879905K31 443
79 -879906K 1 440
79 -879906K11 446
79 -879907K 1 437
79 -879907K11 443
79 -879908K 1 437
79 -879908K11 443
79 -879908K31 442
79 -879909K 1 437
79 -879909K11 443
79 -879910K21 449
79 -879911K 1 438
79 -879911K11 444
79 -879912K 1 438
79 -879912K11 444
79 -879912K31 442
79 -879913K 1 438
79 -879914K 1 438
79 -879914K11 444
79 -879914K21 449
79 -879915K 1 439
79 -879915K11 444
79 -879915K21 449
79 -879915K31 442
79 -879916K 1 437
79 -879916K11 444
79 -879916K21 449
79 -879916K31 442
79 -879917K 1 438
79 -879917K11 444
79 -879918K11 445
79 -879918K31 442
79 -879919K 1 439
79 -879919K11 445
79 -879920K 1 437
79 -879920K11 443
79 -879920K21 449
79 -879921K 1 439
79 -879921K11 445
79 -879921K21 449
79 -879922K 1 439
79 -879922K11 445
79 -879923K 1 439
79 -879923K11 445
79 -879924K 1 439
12 -879925 453
79 -879941K 1 438
79 -879942K 1 441
79 -879942K11 447
79 -879943K 1 441
79 -879943K11 447
79 -879944K11 447
79 -879944K21 450
79 -879945K 1 440
79 -879945K11 446
79 -879946K 1 441
79 -879946K11 447
79 -879946K21 450
879949 1 . . . . . 429, 451
879949 2 . . . . . 429, 452
879949 3 . . . . . 429, 452
879949B 1 . . . . . 429, 451
879949B 2 . . . . . 429, 452
879949B 3 . . . . . 429, 452
11 -879950 . . . . . 429, 452
11 -879950B 1 452
84 -879968B10 . . . . . 588, 609
84 -879968B30 . . . . . 588, 609
84 -879968B 6 . . . . . 588, 609

84 -879968T10 . . . . . 588, 609
84 -879968T15 . . . . . 588, 609
84 -879968T20 . . . . . 588, 609
84 -879968T25 . . . . . 588, 609
84 -879968T30 . . . . . 588, 609
84 -879968T50 . . . . . 588, 609
84 -879968T 6 . . . . . 588, 609
84 -879968T80 . . . . . 588, 609
84 -879969B10 . . . . . 587, 608
84 -879969B 6 . . . . . 587, 608
84 -879969T10 . . . . . 587, 608
84 -879969T15 . . . . . 587, 608
84 -879969T20 . . . . . 587, 608
84 -879969T30 . . . . . 587, 608
84 -879969T 6 . . . . . 587, 608
84 -879978T11 . . . . . 585, 601
84 -879979T11 . . . . . 585, 601
84 -879980B10 . . . . . 587, 608
84 -879980B15 . . . . . 587, 608
84 -879980B30 . . . . . 588, 608
84 -879980T10 . . . . . 587, 608
84 -879980T15 . . . . . 587, 608
84 -879980T20 . . . . . 587, 608
84 -879980T30 . . . . . 588, 608
84 -879981B20 . . . . . 588, 609
84 -879981T10 . . . . . 588, 609
84 -879981T15 . . . . . 588, 609
84 -879981T20 . . . . . 588, 609
84 -879981T25 . . . . . 588, 609
84 -879981T30 . . . . . 589, 609
84 -879981T50 . . . . . 589, 609
84 -879981T80 . . . . . 589, 609
84 -879982B20 . . . . . 588, 609
84 -879982B30 . . . . . 588, 609
84 -879982T20 . . . . . 588, 608
84 -879982T25 . . . . . 588, 609
84 -879982T30 . . . . . 588, 609
880093A03 . . . . . 46, 52, 53, 364, 367
880093A 1 541
880093A 2 541
880095A04 . . . . . 46, 52, 53
880095A05 . . . . . 46, 52, 53
880095A08 . . . . . 362, 365, 539
880095A 1 . . . . . 45, 52, 53
880095A11 . . . . . 353, 539
880095A12 . . . . . 356, 539
57 -880566Q14 . . . . . 234, 235
880653 . . . . . 108, 234, 235
10 -880717A01 . . . . . 282, 385
84 -880756B 3 . . . . . 587, 602
84 -880756B30 . . . . . 587, 602
84 -880756T05 . . . . . 586, 602
84 -880756T 1 . . . . . 586, 602
84 -880756T10 . . . . . 587, 602
84 -880756T 3 . . . . . 587, 602
84 -880756T30 . . . . . 587, 602
35 -880830T 182
880861A 1 515
880861A 2 515
62 -880959 1046
62 -880959T02 1045
62 -880960T 1046
62 -880960T03 1045
62 -880999002 1059
62 -880999003 1059
62 -880999 1 1059
87 - 88107A10 616
87 - 88107A13 . . . . . 352, 355, 357, 614, 616
87 - 88107A 3 616
87 - 88107A 5 616
87 - 88107T09 616
87 - 88107T12 617
84 -881125A 1 643
35 -881126K01 264
35 -881132T 265
84 -881133T 1 613
881150K 1 . . . . . 69, 170, 349, 382, 386, 393
881150Q 1 . . . . . 68, 170, 349, 382, 386, 393
881170A10 . . . . . 351, 353, 356, 526
881170A11 . . . . . 351, 353, 356, 526
881170A12 . . . . . 351, 353, 356, 527
881170A15 526
881170A16 359
881170A20 526
881170A 3 527
881170A 4 . . . . . 351, 353, 528
881170A 5 527
881170A 6 528
881170A 7 527
881170A 8 . . . . . 349, 528
91 -881242T 224
84 -881244A 1 592
33 -881284Q 9, 12
881540 80
881800A 1 499
881801A 1 499
881879A13 594
881879A15 594
881879A 2 593
881879A22 594
881879A 3 594
881940Q 1 . . . . . 996, 1003
11 - 88228 1012
882376 181
882687 . . . . . 267, 306
882811 223
883053A 1 . . . . . 221, 712
883090A01 593
883090B 1 593

33 -883323001 . . . . . 10, 11, 12, 12, 232, 233
88334A 2 . . . . . 98, 187, 360, 363, 367
84 -883459T01 590
79 -883623Q 2 494
79 -883626Q 2 495
79 -883634Q 2 495
35 -883702K 238, 264
35 -883702Q 303
91 -883704K03 282
91 -883704Q03 . . . . . 322, 353, 356, 358
91 -883705T01 98
883710A01 . . . . . 351, 353, 356, 359, 362, 523
883710A02 . . . . . 342, 345, 351, 353, 356, 359, 362, 364, 368, 372, 375, 522
883710A03 . . . . . 388, 522
47 -883796T01 1030
62 -883899002 1058
62 -883899T04 1058
62 -883902001 1053
62 -883902002 1053
26 - 88397A 1 243
88437 1026
84 - 88439A50 . . . . . 37, 381, 385, 645
884481A 1 . . . . . 91, 348
62 -884705 1054
62 -884706 1054
62 -884706 1 1054
62 -884707 1054
62 -884707 1 1054
62 -885156 1058
62 -885156006 1059
62 -885156007 1058
62 -885157 1058
62 -885158 1058
62 -885159003 1058
62 -885159005 1058
62 -885161002 1053
62 -885161003 1053
1656- 8866A62 206
1656- 8866A83 206
1656- 8866G06 206
1656- 8866G08 206
1656- 8866G09 206
88688A22 . . . . . 342, 345, 359, 362, 364, 368, 372, 375, 529
88688A23 . . . . . 388, 529
88688A24 . . . . . 359, 362, 529
88688A25 . . . . . 342, 345, 351, 353, 356, 359, 362, 364, 368, 372, 375, 529
88688A26 . . . . . 388, 529
88688A27 . . . . . 351, 353, 356, 359, 362, 529
88688A94 388
887767K01 . . . . . 381, 384, 619
887767K02 . . . . . 381, 384, 620
887767K03 . . . . . 384, 620
887767K04 . . . . . 384, 620
887767K05 . . . . . 384, 620
12 -887972 . . . . . 996, 997, 997, 1018
87 -887979A 2 . . . . . 35, 349
88825A 6 20
35 -888289T 2 80
84 -888416T04 . . . . . 385, 612
84 -888416T07 . . . . . 385, 612
84 -888416T08 612
84 -888429K11 613
84 -888429K12 613
12 -888451 . . . . . 997, 1022
88845A 1 183
888462A 1 653
888507T 584, 631
888557Q01 . . . . . 186, 391
888557T01 186
888606 108
888617001 . . . . . 503, 506
888712 108
888755K01 . . . . . 188, 243
888755K02 187
888755Q03 188
888755Q04 187
888756K01 . . . . . 188, 243
888756K02 187
888756Q03 188
888756Q04 187
888757K01 188
888757Q02 188
888758K01 . . . . . 188, 243
888758Q02 188
888760K01 188
888760K02 188
888760Q03 188
888760Q04 188
888761K01 . . . . . 188, 243
888761K02 . . . . . 188, 243
888761Q03 188
888761Q04 188
12 -888939 997
54 -888988019 78
889074A 1 . . . . . 130, 131
79 -889222K25 448
79 -889223K23 436
79 -889223K25 448
79 -889223K30 447
79 -889223K40 448
889231A01 517
889231A04 517
889231A05 517
84 -889244T01 612

889246A16 . . . 231
889246A33 . . . 361, 539
889246A34 . . . 361, 539
889246A37 . . . 46, 52
889246A80 . . . 351, 538
889246A81 . . . 351, 538
889246A87 . . . 351, 538
33 -889246Q39 . . . 10, 11, 12, 12, 13, 234, 235
889250K01 . . . 369, 453, 464
91 -889277 . . . 97, 264, 339
91 -889277002 . . . 97, 264, 340
91 -889277K01 . . . 97, 263, 340, 371, 378
91 -889277K03 . . . 97, 263, 340
91 -889277Q01 . . . 97, 340, 371
91 -889277Q03 . . . 97
84 -889282A01 . . . 644
84 -889282A02 . . . 644
84 -889295T . . . 370, 374, 642
87 -889305T01 . . . 517
87 -889305T02 . . . 517
62 -889345Q01 . . . 1055
62 -889346 . . . 1057
62 -889347 . . . 1056
889355A 1 . . . 555, 724
889432A 1 . . . 127, 128, 158
889433A 1 . . . 127, 128, 158
889454A02 . . . 705
64 -889457A01 . . . 698, 699, 700, 701
33 -889597Q . . . 10, 17, 18, 18, 230
48 -889619A46 . . . 820, 821, 823, 835, 838, 842, 857
48 -889620A46 . . . 820, 821, 823, 835, 838, 842, 857
19 -889725 . . . 1028
19 -889725047 . . . 1028
19 -889725T28 . . . 1028
19 -889725T35 . . . 1028
889835A01 . . . 502, 507
64 -889930A01 . . . 694
64 -889930A02 . . . 693
64 -889930A03 . . . 693
64 -889930A08 . . . 689
64 -889930A09 . . . 689
64 -889930A10 . . . 689
64 -889930A11 . . . 689
64 -889930A12 . . . 689
64 -889930A13 . . . 689
64 -889930A14 . . . 689
64 -889930A15 . . . 689
64 -889930A16 . . . 689
64 -889930A17 . . . 689
64 -889930A18 . . . 689
64 -889930A19 . . . 689
64 -889930A20 . . . 690
64 -889931A01 . . . 694
64 -889931A08 . . . 690
64 -889931A09 . . . 690
64 -889931A10 . . . 690
64 -889931A11 . . . 690
64 -889931A12 . . . 690
64 -889931A13 . . . 690
64 -889931A14 . . . 690
64 -889931A15 . . . 690
64 -889931A16 . . . 690
64 -889931A17 . . . 690
64 -889931A18 . . . 690
64 -889931A19 . . . 690
64 -889931A20 . . . 690
64 -889932A01 . . . 694
64 -889932A08 . . . 690
64 -889932A09 . . . 690
64 -889932A10 . . . 690
64 -889932A11 . . . 690
64 -889932A12 . . . 690
64 -889932A13 . . . 690
64 -889932A14 . . . 690
64 -889932A15 . . . 690
64 -889932A16 . . . 691
64 -889932A17 . . . 691
64 -889932A18 . . . 691
64 -889932A19 . . . 691
64 -889932A20 . . . 691
64 -889933A01 . . . 694
889933Q08 . . . 692
889933Q09 . . . 692
889933Q10 . . . 692
889933Q11 . . . 692
889933Q12 . . . 692
889933Q13 . . . 692
889933Q14 . . . 692
889933Q15 . . . 692
889933Q16 . . . 692
889933Q17 . . . 692
889933Q18 . . . 692
889933Q19 . . . 692
889933Q20 . . . 692
64 -889934A01 . . . 694
64 -889934A04 . . . 679, 683, 694
64 -889934A05 . . . 344, 371, 375, 382, 678, 683
64 -889934A06 . . . 679, 683
64 -889934A08 . . . 692
64 -889934A09 . . . 692
64 -889934A10 . . . 692
64 -889934A11 . . . 692
64 -889934A12 . . . 692
64 -889934A13 . . . 692
64 -889934A14 . . . 692

64 -889934A15 692
64 -889934A16 692
64 -889934A17 692
64 -889934A18 692
64 -889934A19 693
64 -889934A20 693
64 -889935A01 694
64 -889935A08 685
64 -889935A09 685
64 -889935A10 685
64 -889935A11 685
64 -889935A12 685
64 -889935A13 685
64 -889935A14 685
64 -889935A15 685
64 -889935A16 685
64 -889935A17 685
64 -889935A18 685
64 -889935A19 685
64 -889935A20 685
64 -889936A01 694
64 -889936A08 685
64 -889936A09 685
64 -889936A10 686
64 -889936A11 686
64 -889936A12 686
64 -889936A13 686
64 -889936A14 686
64 -889936A15 686
64 -889936A16 686
64 -889936A17 686
64 -889936A18 686
64 -889936A19 686
64 -889936A20 686
64 -889937A01 695
64 -889937Q08 686
64 -889937Q09 686
64 -889937Q10 686
64 -889937Q11 686
64 -889937Q12 686
64 -889937Q13 686
64 -889937Q14 686
64 -889937Q15 686
64 -889937Q16 686
64 -889937Q17 686
64 -889937Q18 686
64 -889937Q19 686
64 -889937Q20 686
64 -889937Q21 686
64 -889937Q22 687
64 -889937Q23 687
64 -889937Q24 687
64 -889937Q25 687
64 -889937Q26 687
64 -889937Q27 687
64 -889937Q28 687
64 -889937Q29 687
64 -889937Q30 687
64 -889937Q32 687
64 -889937Q34 687
64 -889937Q36 687
64 -889937Q38 687
64 -889937Q40 687
64 -889937Q42 687
64 -889937Q44 687
64 -889937Q48 687
64 -889937Q50 687
64 -889937Q52 687
64 -889937Q58 687
64 -889937Q60 687
64 -889938A01 695
64 -889938A08 687
64 -889938A09 687
64 -889938A10 687
64 -889938A11 687
64 -889938A12 687
64 -889938A13 687
64 -889938A14 687
64 -889938A15 687
64 -889938A16 687
64 -889938A17 687
64 -889938A18 687
64 -889938A19 688
64 -889938A20 688
64 -889939A08 693
64 -889939A09 693
64 -889939A10 693
64 -889939A11 693
64 -889939A12 693
64 -889939A13 693
64 -889939A14 693
64 -889939A15 693
64 -889939A16 693
64 -889939A17 693
64 -889939A18 693
64 -889939A19 693
64 -889939A20 693
64 -889940A08 688
64 -889940A09 688
64 -889940A10 688
64 -889940A11 688
64 -889940A12 688
64 -889940A13 688
64 -889940A14 688
64 -889940A15 688
64 -889940A16 688
64 -889940A17 688
64 -889940A18 688
64 -889940A19 688
64 -889940A20 688

64 -889940A21 688
64 -889940A22 688
64 -889940A23 688
64 -889940A24 688
64 -889940A25 688
64 -889940A26 688
64 -889940A27 688
64 -889940A28 688
64 -889940A29 688
64 -889940A30 688
64 -889940A32 688
64 -889940A34 688
64 -889940A36 688
64 -889940A38 688
64 -889940A40 688
64 -889940A42 688
64 -889940A44 688
64 -889940A46 688
64 -889940A48 688
64 -889940A50 688
48 -889964A65 . . . . . 838, 865
48 -889964L44 . . . . . 867, 883
48 -889964L45 . . . . . 867, 883
48 -889964L48 . . . . . 868, 883
48 -889964L49 . . . . . 868, 883
48 -889964L63 . . . . . 867, 883
48 -889964L64 . . . . . 867, 883
48 -889964L65 . . . . . 867, 883
48 -889964L67 . . . . . 868, 883
48 -889964L68 . . . . . 868, 883
48 -889964L69 . . . . . 868, 883
48 -889965A65 . . . . . 838, 865
48 -889965L44 . . . . . 867, 883
48 -889965L45 . . . . . 867, 883
48 -889965L48 . . . . . 868, 883
48 -889965L49 . . . . . 868, 883
48 -889965L63 . . . . . 867, 883
48 -889965L64 . . . . . 867, 883
48 -889965L65 . . . . . 867, 883
48 -889965L67 . . . . . 868, 883
48 -889965L68 . . . . . 868, 883
48 -889965L69 . . . . . 868, 883
48 -889966A65 . . . . . 838, 865
48 -889966L44 . . . . . 866, 883
48 -889966L45 . . . . . 866, 883
48 -889966L48 . . . . . 868, 883
48 -889966L49 . . . . . 868, 883
48 -889966L63 . . . . . 866, 883
48 -889966L64 . . . . . 866, 883
48 -889966L65 . . . . . 866, 883
48 -889966L67 . . . . . 868, 883
48 -889966L68 . . . . . 868, 883
48 -889966L69 . . . . . 868, 883
48 -889967A65 . . . . . 838, 865
48 -889967L44 . . . . . 866, 883
48 -889967L45 . . . . . 866, 883
48 -889967L48 . . . . . 868, 883
48 -889967L49 . . . . . 868, 883
48 -889967L63 . . . . . 866, 883
48 -889967L64 . . . . . 866, 883
48 -889967L65 . . . . . 866, 883
48 -889967L67 . . . . . 868, 883
48 -889967L68 . . . . . 868, 883
48 -889967L69 . . . . . 868, 883
48 -889968A65 . . . . . 838, 865
48 -889968L44 . . . . . 866, 883
48 -889968L45 . . . . . 866, 883
48 -889968L48 . . . . . 868, 883
48 -889968L49 . . . . . 868, 883
48 -889968L63 . . . . . 866, 883
48 -889968L64 . . . . . 866, 883
48 -889968L65 . . . . . 866, 883
48 -889968L67 . . . . . 868, 883
48 -889968L68 . . . . . 868, 883
48 -889968L69 . . . . . 868, 883
48 -889969A65 . . . . . 838, 865
48 -889969L44 . . . . . 866, 883
48 -889969L45 . . . . . 866, 883
48 -889969L48 . . . . . 868, 883
48 -889969L49 . . . . . 868, 883
48 -889969L63 . . . . . 866, 883
48 -889969L64 . . . . . 866, 883
48 -889969L65 . . . . . 866, 883
48 -889969L67 . . . . . 868, 883
48 -889969L68 . . . . . 868, 883
48 -889969L69 . . . . . 868, 883
48 -889970A65 . . . . . 838, 865
48 -889970L44 . . . . . 866, 883
48 -889970L45 . . . . . 866, 883
48 -889970L48 . . . . . 868, 883
48 -889970L49 . . . . . 868, 883
48 -889970L63 . . . . . 866, 883
48 -889970L64 . . . . . 866, 883
48 -889970L65 . . . . . 866, 883
48 -889970L67 . . . . . 868, 883
48 -889970L68 . . . . . 867, 883
48 -889970L69 . . . . . 867, 883
48 -889971A65 . . . . . 838, 865
48 -889971L44 . . . . . 866, 883
48 -889971L45 . . . . . 866, 883
48 -889971L48 . . . . . 868, 883
48 -889971L49 . . . . . 868, 883
48 -889971L63 . . . . . 866, 883
48 -889971L64 . . . . . 866, 883
48 -889971L65 . . . . . 866, 883
48 -889971L67 . . . . . 867, 883
48 -889971L68 . . . . . 867, 883
48 -889971L69 . . . . . 867, 883
48 -889972A65 . . . . . 838, 865
48 -889972L44 . . . . . 866, 883

48 -889972L45 . . . . . 866, 883
48 -889972L48 . . . . . 867, 883
48 -889972L49 . . . . . 867, 883
48 -889972L63 . . . . . 866, 883
48 -889972L64 . . . . . 866, 883
48 -889972L65 . . . . . 866, 883
48 -889972L67 . . . . . 867, 883
48 -889972L68 . . . . . 867, 883
48 -889972L69 . . . . . 867, 883
48 -889972L84 . . . . . 866, 883
48 -889972L85 . . . . . 866, 883
48 -889972L88 . . . . . 867, 883
48 -889972L89 . . . . . 867, 883
48 -889973A65 . . . . . 838, 865
48 -889973L44 . . . . . 866, 883
48 -889973L45 . . . . . 866, 883
48 -889973L48 . . . . . 867, 883
48 -889973L49 . . . . . 867, 883
48 -889973L63 . . . . . 866, 883
48 -889973L64 . . . . . 866, 883
48 -889973L65 . . . . . 866, 883
48 -889973L67 . . . . . 867, 883
48 -889973L68 . . . . . 867, 883
48 -889973L69 . . . . . 867, 883
48 -889973L84 . . . . . 866, 883
48 -889973L85 . . . . . 866, 883
48 -889973L88 . . . . . 867, 883
48 -889973L89 . . . . . 867, 883
48 -889974A65 . . . . . 838, 865
48 -889974L44 . . . . . 867, 883
48 -889974L45 . . . . . 867, 883
48 -889974L48 . . . . . 868, 883
48 -889974L49 . . . . . 868, 883
48 -889974L63 . . . . . 867, 883
48 -889974L64 . . . . . 867, 883
48 -889974L65 . . . . . 867, 883
48 -889974L67 . . . . . 868, 883
48 -889974L68 . . . . . 868, 883
48 -889974L69 . . . . . 868, 883
48 -889975A65 . . . . . 838, 865
48 -889975L44 . . . . . 867, 883
48 -889975L45 . . . . . 867, 883
48 -889975L48 . . . . . 868, 883
48 -889975L49 . . . . . 868, 883
48 -889975L63 . . . . . 867, 883
48 -889975L64 . . . . . 867, 883
48 -889975L65 . . . . . 867, 883
48 -889975L67 . . . . . 868, 883
48 -889975L68 . . . . . 868, 883
48 -889975L69 . . . . . 868, 883
48 -891502A01 . . . . . 875, 878
48 -891502A02 . . . . . 875, 878
48 -891504A01 . . . . . 875, 878
48 -891504A02 . . . . . 875, 878
48 -891506A01 . . . . . 875, 878
48 -891506A02 . . . . . 875, 878
48 -891508A01 . . . . . 875, 878
48 -891508A02 . . . . . 875, 878
48 -891510A01 . . . . . 875, 878
48 -891510A02 . . . . . 875, 878
891648001 523
891648002 523
64 -891665A01 701
64 -891665A02 701
64 -891665Q01 681
64 -891665Q04 682
64 -891665Q05 682
64 -891666Q03 682
64 -891666Q04 . . . . . 682, 702
64 -891666Q05 682
64 -891667A03 . . . . . 695, 702
64 -891667A04 695
64 -891667Q01 . . . . . 678, 682, 683, 702
92 -891690 1052
62 -891695 1051
62 -891697 1051
62 -891703 1049
64 -891762A04 . . . . . 50, 657
891777A01 . . . . . 503, 506, 591
84 -891924K01 564
84 -891925K01 565
84 -891926K01 563
891954A05 598
891954A06 598
891954A24 597
84 -891957K01 589
84 -891963A01 519
84 -892092T01 611
32 -892156A01 . . . . . 343, 500
79 -892219K19 . . . . . 347, 366, 369, 373, 380, 384, 390, 435
79 -892219K20 . . . . . 347, 366, 369, 373, 380, 384, 390, 435
84 -892323T01 . . . . . 586, 601
84 -892323T08 . . . . . 586, 601
892367T03 673
892380A02 . . . . . 382, 386, 659
892380K05 . . . . . 379, 382, 386, 657
892380K11 657
892380K12 657
892380K33 658
892380K34 658
892380K36 . . . . . 382, 386, 658
26 - 89238A 2 66
32 -892438002 710
32 -892438003 710
32 -892438004 710
32 -892438005 710
32 -892438006 710
32 -892438007 710

32 -892438008 710
32 -892438010 710
32 -892438012 710
32 -892438014 710
32 -892438016 710
32 -892438018 710
32 -892438020 710
32 -892438022 710
32 -892438024 711
32 -892438K02 . . . . . 379, 382, 386, 666
32 -892438K03 666
32 -892438K04 666
32 -892438K05 667
32 -892438K06 667
32 -892438K07 667
32 -892438K08 667
32 -892438K10 667
32 -892438K12 667
32 -892438K14 667
32 -892438K16 667
32 -892438K18 667
32 -892438K20 667
32 -892438K22 667
32 -892438K24 . . . . . 382, 386, 667
892440A18 . . . . . 382, 386
84 -892444T02 . . . . . 391, 611
84 -892451B20 606
84 -892451B25 607
84 -892451T06 . . . . . 381, 385, 390, 605, 606
84 -892451T10 . . . . . 390, 605, 606
84 -892451T15 . . . . . 390, 605, 606
84 -892451T20 . . . . . 390, 605, 606
84 -892451T25 . . . . . 391, 605, 607
84 -892451T30 . . . . . 391, 605, 607
84 -892451T40 . . . . . 381, 385, 391, 605, 607
84 -892452T01 589
84 -892453A01 589
84 -892473A01 . . . . . 352, 355, 358, 526, 635
892486K04 . . . . . 209, 463
892486K05 . . . . . 209, 463
892486K07 . . . . . 209, 463
892486K08 . . . . . 376, 380, 384, 463
892486T04 463
892516K51 659
892516K52 659
892516K53 . . . . . 386, 659
892516K61 659
892516K62 659
892516K63 . . . . . 386, 659
22 -892517 668
22 -892518 668
22 -892519 668
22 -892520 668
22 -892521 668
22 -892522 668
22 -892523 668
22 -892524 669
22 -892525 669
22 -892526 669
22 -892527 669
22 -892528 669
892557A02 660
892558A02 660
892558K31 658
892558K32 659
892558K33 . . . . . 386, 658
892560K31 . . . . . 379, 657
892560K32 658
892560K35 . . . . . 382, 386, 657
892560K53 658
892560K54 658
892560K56 . . . . . 382, 386, 658
33 -892567Q 10, 16, 17, 230
892687A02 180
92 -892752 1052
67 -892762A01 654
67 -892762A02 654
67 -892762A03 654
67 -892762A04 654
67 -892762A05 654
67 -892762A06 655
67 -892762A07 655
67 -892763A14 674
67 -892763A15 673
67 -892763A24 674
64 -892789Q22 . . . . . 349, 383, 672, 679, 684, 695
64 -892789Q23 . . . . . 672, 679, 684, 695
64 -892789Q24 . . . . . 672, 679, 684, 695
64 -892789Q25 . . . . . 672, 679, 684, 695
64 -892789Q26 . . . . . 672, 679, 684, 695
64 -892789Q27 . . . . . 383, 672, 679, 684, 695
892789Q32 . . . . . 672, 679, 684
892789Q33 . . . . . 672, 680, 684
892789Q34 . . . . . 672, 680, 684
64 -892790A01 555
64 -892790A02 555
64 -892790A03 . . . . . 693, 695
64 -892790A04 . . . . . 693, 696
79 -892821K03 445
892822A02 . . . . . 387, 673
32 -892825008 . . . . . 382, 386, 667
32 -892825010 667
32 -892825012 667
32 -892825014 667
32 -892825016 667
32 -892825018 667
32 -892825020 667
32 -892825022 667
32 -892825024 667
32 -892825026 . . . . . 382, 386, 667

892864T04 . . . . . 234, 235
892864T06 . . . . . 233, 234
91 -892866A01 . . . . . 97, 263, 299, 385
84 -892868T01 . . . . . 382, 386, 664
84 -892868T02 . . . . . 382, 386, 664
84 -892868T03 664
84 -892955K01 564
892955K02 565
84 -892955K03 563
84 -892955K04 . . . . . 381, 385, 563
84 -892955K05 385
892955K22 564
892955K32 . . . . . 383, 564
892984A01 . . . . . 380, 383, 515
892984A02 . . . . . 380, 383, 515
892984K31 . . . . . 379, 383, 561
892984K32 . . . . . 379, 383, 561
84 -892990T01 . . . . . 342, 346, 352, 354, 355, 356, 358, 359, 362, 365, 368, 372, 376, 390, 603, 618
84 -892990T10 . . . . . 342, 346, 354, 356, 359, 362, 365, 368, 372, 376, 390, 603, 618
84 -892990T15 . . . . . 342, 346, 354, 357, 359, 362, 365, 368, 372, 376, 390, 603, 618
35 -893318T02 . . . . . 94, 234, 235
84 -893330K01 610
87 -893353A02 . . . . . 381, 384, 614, 622
87 -893353A03 . . . . . 381, 385, 614, 622
87 -893353A04 . . . . . 381, 385, 614, 622
87 -893353A05 . . . . . 381, 385, 615, 622
87 -893353A06 . . . . . 385, 615, 622
87 -893353T04 614
893359K03 . . . . . 380, 383, 515
84 -893371T10 . . . . . 382, 386, 665
84 -893371T20 . . . . . 382, 386, 665
84 -893371T30 . . . . . 382, 386, 665
84 -893377K01 562
84 -893377K02 563
84 -893377K03 562
84 -893377K04 . . . . . 381, 385, 562
84 -893378K01 564
84 -893378K03 564
84 -893378K04 . . . . . 381, 385, 564
893388A01 . . . . . 585, 632
28 -893394002 661
893396A02 . . . . . 387, 673
893404 . . . . . 108, 234, 235, 235
87 -893449T01 617
84 -893452A01 . . . . . 590, 610
893696 707
89491 1 623
89491 10 623
89491 11 623
89491 12 623
89491 2 623
89491 3 623
89491 4 623
89491 5 623
89491 6 623
89491 7 623
89491 8 623
89491 9 623
91 -895040K01 . . . . . 382, 386, 665
12 -895062 65
87 -895091K03 665
84 -895093T03 639
35 -895207 . . . . . 242, 243, 267, 306
79 -895283A01 465
79 -895283A02 . . . . . 464, 465
79 -895283A03 . . . . . 342, 346, 351, 362, 365, 376, 388, 464, 465, 466
79 -895283A05 . . . . . 342, 346, 354, 356, 359, 365, 368, 372, 376, 466
79 -895283A06 . . . . . 342, 345, 368, 372, 464, 465, 465, 466
79 -895283A21 470
79 -895283A22 470
79 -895283A23 . . . . . 342, 346, 351, 362, 365, 376, 388, 464, 465, 471
79 -895283A25 . . . . . 342, 346, 354, 356, 359, 365, 368, 372, 376, 471
79 -895283A26 . . . . . 342, 345, 368, 372, 471
79 -895283A41 475
79 -895283A42 475
79 -895283A43 . . . . . 388, 475
79 -895283A45 475
79 -895283A46 475
79 -895283B01 466
79 -895283B03 466
79 -895283B13 479
79 -895283B43 475
79 -895283B63 484
79 -895283B65 484
79 -895283B66 484
79 -895283Q01 479
79 -895283Q02 479
79 -895283Q03 . . . . . 342, 346, 351, 362, 365, 376, 388, 479
79 -895283Q05 . . . . . 342, 346, 354, 356, 359, 365, 368, 372, 376, 479
79 -895283Q06 . . . . . 342, 345, 368, 372, 480
79 -895283Q21 487
79 -895283Q22 487
79 -895283Q23 . . . . . 342, 346, 351, 362, 365, 376, 388, 488
79 -895283Q25 . . . . . 342, 346, 354, 356, 359, 365, 368, 372, 376, 488
79 -895283Q26 . . . . . 342, 345, 368, 372, 488
79 -895283Q41 491
79 -895283Q43 . . . . . 464, 465, 492
79 -895283Q45 . . . . . 464, 465, 492

79 -895283Q46 492
79 -895283Q61 483
79 -895283Q62 483
79 -895283Q63 . . . . . 388, 484
79 -895283Q65 484
79 -895283Q66 484
895284A01 538
895284A02 538
79 -895285A01 . . . . . 354, 357, 359, 362, 365, 466
79 -895285A03 . . . . . 342, 346, 362, 365, 369, 372, 376, 388, 466
79 -895285A04 . . . . . 346, 376, 388, 467
79 -895285A06 467
79 -895285A08 467
79 -895285A21 . . . . . 354, 357, 359, 362, 365, 471
79 -895285A23 . . . . . 342, 346, 362, 365, 369, 372, 376, 388, 471
79 -895285A24 . . . . . 346, 376, 388, 471
79 -895285A26 472
79 -895285A28 472
79 -895285A41 476
79 -895285A43 . . . . . 388, 476
79 -895285A44 . . . . . 388, 476
79 -895285A46 476
79 -895285A48 476
79 -895285B01 466
79 -895285B23 471
79 -895285B43 476
79 -895285B61 484
79 -895285B63 485
79 -895285Q01 . . . . . 354, 357, 359, 362, 365, 480
79 -895285Q03 . . . . . 342, 346, 362, 365, 369, 372, 376, 388, 480
79 -895285Q04 . . . . . 346, 376, 388, 480
79 -895285Q08 480
79 -895285Q21 . . . . . 354, 357, 359, 362, 365, 488
79 -895285Q23 . . . . . 342, 346, 362, 365, 369, 372, 376, 388, 488
79 -895285Q24 . . . . . 346, 376, 388, 488
79 -895285Q28 489
79 -895285Q41 492
79 -895285Q43 492
79 -895285Q44 492
79 -895285Q48 492
79 -895285Q61 484
79 -895285Q63 . . . . . 388, 484
79 -895285Q64 . . . . . 388, 485
79 -895285Q68 485
79 -895286A01 . . . . . 343, 346, 354, 357, 359, 362, 365, 369, 372, 376, 388, 467
79 -895286A21 . . . . . 343, 346, 354, 357, 359, 362, 365, 369, 372, 376, 388, 472
79 -895286A41 . . . . . 388, 476
79 -895286B01 468
79 -895286B41 476
79 -895286Q01 . . . . . 343, 346, 354, 357, 359, 362, 365, 369, 372, 376, 388, 481
79 -895286Q21 . . . . . 343, 346, 354, 357, 359, 362, 365, 369, 372, 376, 388, 489
79 -895286Q41 493
79 -895286Q61 . . . . . 388, 485
79 -895287A01 . . . . . 346, 377, 389, 468
79 -895287A02 468
79 -895287A03 468
79 -895287A21 . . . . . 346, 377, 389, 472
79 -895287A22 473
79 -895287A23 473
79 -895287A41 . . . . . 389, 477
79 -895287A42 477
79 -895287Q01 . . . . . 346, 377, 389, 481
79 -895287Q02 481
79 -895287Q21 . . . . . 346, 377, 389, 489
79 -895287Q22 489
79 -895287Q41 493
79 -895287Q61 . . . . . 389, 485
79 -895287Q62 485
79 -895288A01 . . . . . 343, 468
79 -895288A02 468
79 -895288A03 . . . . . 346, 360, 363, 366, 377, 468
79 -895288A04 468
79 -895288A05 . . . . . 369, 373, 469
79 -895288A06 469
79 -895288A21 . . . . . 343, 473
79 -895288A22 473
79 -895288A23 . . . . . 346, 360, 363, 366, 377, 473
79 -895288A24 473
79 -895288A25 . . . . . 369, 373, 473
79 -895288A26 473
79 -895288A41 477
79 -895288A42 477
79 -895288A43 477
79 -895288A44 477
79 -895288A45 477
79 -895288A46 477
79 -895288Q01 . . . . . 343, 481
79 -895288Q02 481
79 -895288Q03 . . . . . 346, 360, 363, 366, 377, 482
79 -895288Q04 482
79 -895288Q05 . . . . . 369, 373, 482
79 -895288Q06 482
79 -895288Q21 . . . . . 343, 490
79 -895288Q22 490
79 -895288Q23 . . . . . 346, 360, 363, 366, 377, 490
79 -895288Q24 490
79 -895288Q25 . . . . . 369, 373, 490
79 -895288Q26 490
79 -895288Q41 493
79 -895288Q42 493
79 -895288Q43 493
79 -895288Q44 493

79 -895288Q45 493
79 -895288Q46 493
79 -895288Q61 485
79 -895288Q62 485
79 -895288Q63 486
79 -895288Q64 486
79 -895288Q65 486
79 -895288Q66 486
79 -895289A01 . . . . . 389, 469
79 -895289A02 469
79 -895289A21 . . . . . 389, 474
79 -895289A22 474
79 -895289A41 . . . . . 389, 478
79 -895289A42 478
79 -895289Q01 . . . . . 389, 482
79 -895289Q21 . . . . . 389, 490
79 -895289Q41 494
79 -895289Q61 . . . . . 389, 486
79 -895290A01 . . . . . 347, 469
79 -895290A21 . . . . . 347, 474
79 -895290A41 478
79 -895290Q01 . . . . . 347, 482
79 -895290Q61 486
79 -895291A01 . . . . . 343, 346, 354, 357, 360, 362, 365, 369, 372, 376, 389, 469
79 -895291A21 . . . . . 343, 346, 354, 357, 360, 362, 365, 369, 372, 376, 389, 474
79 -895291A41 . . . . . 389, 478
79 -895291B01 469
79 -895291B11 483
79 -895291B31 491
79 -895291B41 478
79 -895291Q01 . . . . . 343, 346, 354, 357, 360, 362, 365, 369, 373, 376, 389, 482
79 -895291Q21 . . . . . 343, 346, 354, 357, 360, 363, 365, 369, 373, 376, 389, 491
79 -895291Q41 494
79 -895291Q61 . . . . . 389, 486
79 -895292A01 . . . . . 343, 346, 360, 363, 365, 369, 373, 377, 389, 470
79 -895292A21 . . . . . 343, 346, 360, 363, 366, 369, 373, 377, 389, 474
79 -895292A41 . . . . . 389, 478
79 -895292B01 470
79 -895292B11 483
79 -895292B31 491
79 -895292B41 478
79 -895292B61 487
79 -895292Q01 . . . . . 343, 346, 360, 363, 366, 369, 373, 377, 389, 483
79 -895292Q21 . . . . . 343, 346, 360, 363, 366, 369, 373, 377, 389, 491
79 -895292Q41 494
79 -895292Q61 . . . . . 389, 487
79 -895294A01 . . . . . 347, 377, 389, 469
79 -895294A21 . . . . . 347, 377, 389, 474
79 -895294A41 . . . . . 389, 478
79 -895294Q01 . . . . . 347, 377, 389, 483
79 -895294Q21 . . . . . 347, 377, 389, 491
79 -895294Q41 494
79 -895294Q61 . . . . . 389, 487
79 -895295A01 . . . . . 343, 346, 354, 357, 360, 363, 365, 369, 373, 376, 389, 470
79 -895295A21 . . . . . 343, 346, 354, 357, 360, 363, 365, 369, 373, 376, 389, 475
79 -895295A41 . . . . . 389, 479
79 -895295Q01 . . . . . 343, 346, 354, 357, 360, 363, 365, 369, 373, 376, 389, 483
79 -895295Q21 . . . . . 343, 346, 354, 357, 360, 363, 365, 369, 373, 376, 389, 491
79 -895295Q41 494
79 -895295Q61 . . . . . 389, 487
895299A02 . . . . . 24, 26, 351
895299A03 . . . . . 24, 27, 354, 357
91 -895343T02 . . . . . 98, 733
84 -895388T02 639
84 -895725A03 628
84 -895725A04 627
84 -895744A02 639
84 -895744A04 639
895764A01 93
895816A02 . . . . . 386, 660
895817A02 . . . . . 386, 661
895818K12 661
895819K12 661
84 -895820T02 600
22 -896094A01 . . . . . 369, 500
84 -896206T10 589
84 -896206T15 589
896233A01 1003
896233Q01 996
35 -896247 . . . . . 94, 234
62 -896281A06 1048
62 -896282A06 1048
62 -896283A06 1048
62 -896284A06 1048
896297A01 . . . . . 99, 353
33 -896323 . . . . . 7, 15
33 -896329818 120
33 -896329874 . . . . . 10, 15
47 -896332063 242
84 -896333T25 612
62 -896344A05 1053
62 -896345A01 1053
91 -896352A01 653
84 -896370T01 . . . . . 590, 610
84 -896372K01 563
84 -896372K02 . . . . . 381, 385, 563
84 -896377K01 565
84 -896377K02 . . . . . 385, 565
84 -896377K03 . . . . . 385, 565

84 -896380T05 621
89638A 3 705
84 -896394T01 639
62 -896452 1051
62 -896456 1051
62 -896457 1051
89645A34 . . . . . 557, 724
89645A37 . . . . . 557, 724
62 -896462 1049
896500A01 . . . . . 386, 662
84 -896537K02 . . . . . 347, 370, 374, 378, 391, 617
84 -896537K08 . . . . . 347, 370, 374, 378, 391, 617
84 -896537K11 . . . . . 343, 347, 360, 370, 374, 378, 391, 617
84 -896537K15 . . . . . 343, 347, 360, 363, 366, 370, 374, 378, 391, 617
84 -896537K20 . . . . . 343, 347, 360, 363, 366, 370, 374, 378, 391, 618
84 -896537K24 . . . . . 343, 347, 370, 374, 378, 391, 618
84 -896537K25 . . . . . 348, 378, 618
84 -896537K29 . . . . . 343, 348, 360, 378, 391, 618
84 -896537K30 . . . . . 348, 378, 618
84 -896537K40 . . . . . 391, 618
84 -896537T02 . . . . . 351, 354, 357, 390, 602, 618
84 -896537T08 . . . . . 352, 354, 357, 390, 602, 618
84 -896537T11 . . . . . 352, 354, 357, 390, 602, 618
84 -896537T15 . . . . . 352, 355, 357, 390, 602, 618
84 -896537T20 . . . . . 352, 355, 357, 390, 602, 618
84 -896537T24 . . . . . 352, 355, 357, 390, 603, 618
84 -896537T29 . . . . . 352, 355, 357, 390, 603, 618
84 -896537T40 . . . . . 390, 603, 618
84 -896537T99 . . . . . 352, 355, 358, 603
84 -896539T01 610
84 -896539T05 610
84 -896539T08 610
84 -896540T01 611
84 -896541T01 . . . . . 352, 355, 358, 611
84 -896542T01 610
84 -896542T05 610
84 -896542T08 610
896609A01 380
896609A02 380
896609K31 . . . . . 379, 383
896609K32 . . . . . 379, 383
896648A07 . . . . . 47, 53, 54
896648A09 . . . . . 47, 53, 54, 344
84 -896691T05 623
84 -896691T10 623
896691T15 623
48 -896890A10 . . . . . 832, 847, 916, 919, 921
48 -896892A40 . . . . . 832, 847, 916, 919, 921
48 -896896A40 . . . . . 832, 847, 916, 919, 921
48 -896900A40 . . . . . 832, 847, 916, 919, 921
896919951 623
896919952 624
896919953 624
896919954 624
896919955 624
896919956 624
896919957 624
896919958 624
896919959 624
896919960 624
896919961 624
896919962 624
896919963 624
896919964 624
896919965 624
896919966 624
896919967 624
896919968 624
896919969 624
896919970 624
897001T 996, 1024
84 -897345T08 . . . . . 559, 581
84 -897345T63 579
897453T 996, 1024
897478K01 . . . . . 386, 647, 674
897478K02 . . . . . 382, 647, 674, 685
48 -897550A06 . . . . . 838, 869
57 -897574Q01 233
48 -897610A10 . . . . . 830, 846, 920, 929
48 -897614A10 . . . . . 830, 846, 920, 929
48 -897618A10 . . . . . 830, 846, 920, 929
87 -897635K01 637
32 -897643A01 . . . . . 664, 667
87 -897716451 624
87 -897716457 624
87 -897716460 624
87 -897716461 624
87 -897716462 624
87 -897716463 624
87 -897716821 624
87 -897716827 624
87 -897716830 624
87 -897716831 624
87 -897716832 624
87 -897716833 624
87 -897716841 624
87 -897716847 624
87 -897716850 624
87 -897716851 624
87 -897716852 625
87 -897716853 625
87 -897716K01 . . . . . 381, 384, 615, 621
87 -897716K02 . . . . . 381, 384, 615, 621
87 -897716K03 615
87 -897716K04 615
22 - 89771Q 2 . . . . . 74, 181
22 - 89771T 2 . . . . . 74, 84, 181

22 -897726 669
22 - 89772Q 1 75
22 - 89772T 1 75
48 -897748A11 . . . . . 831, 847, 921
48 -897750A11 . . . . . 831, 847, 921
48 -897752A11 . . . . . 831, 847, 921
48 -897754A11 . . . . . 831, 847
897977A03 . . . . . 342, 345, 351, 354, 356, 359, 362, 365, 368, 372, 376, 388, 545, 716
897977A04 . . . . . 545, 716
897977A05 . . . . . 545, 716
897977A06 . . . . . 545, 716
897977A07 . . . . . 546, 716
897977A08 . . . . . 546, 717
897977A09 . . . . . 546, 717
897977A10 . . . . . 546, 717
897977A11 . . . . . 546, 717
897977A12 . . . . . 546, 717
897977A13 . . . . . 546, 717
897977A14 . . . . . 546, 717
897977A15 . . . . . 546, 717
897977A16 . . . . . 546, 717
897977A17 . . . . . 546, 717
897977A18 . . . . . 546, 717
897977A19 . . . . . 546, 717
897977A20 . . . . . 546, 717
897977A21 . . . . . 546, 717
897977A22 . . . . . 546, 717
897977A23 . . . . . 546, 717
897977A24 . . . . . 546, 717
897977A25 . . . . . 546, 717
897977A26 . . . . . 546, 717
897977A27 . . . . . 546, 717
897977A28 . . . . . 546, 717
897977A29 . . . . . 546, 717
897977A30 . . . . . 546, 717
897977A32 . . . . . 547, 717
897977A34 . . . . . 547, 718
897977A36 . . . . . 547, 718
897977A38 . . . . . 547, 718
897977A40 . . . . . 547, 718
897977A42 . . . . . 547, 718
897977A44 . . . . . 547, 718
897977A46 . . . . . 547, 718
897977A48 . . . . . 547, 718
897977A50 . . . . . 342, 345, 351, 354, 356, 359, 362, 365, 368, 372, 376, 388, 547, 718
897977B09 . . . . . 547, 718
897977B10 . . . . . 547, 718
897977B11 . . . . . 547, 718
897977B12 . . . . . 547, 718
897977B13 . . . . . 547, 718
897977B14 . . . . . 547, 718
897977B15 . . . . . 547, 718
897977B17 . . . . . 547, 718
897978A03 . . . . . 342, 345, 351, 354, 356, 359, 362, 365, 368, 372, 376, 388, 549, 720
897978A04 . . . . . 549, 720
897978A05 . . . . . 549, 720
897978A06 . . . . . 549, 720
897978A07 . . . . . 549, 720
897978A08 . . . . . 549, 720
897978A09 . . . . . 549, 720
897978A10 550
897978A11 . . . . . 550, 720
897978A12 . . . . . 550, 720
897978A13 . . . . . 550, 721
897978A14 . . . . . 550, 721
897978A15 . . . . . 550, 721
897978A16 . . . . . 550, 721
897978A17 721
897978A18 . . . . . 550, 721
897978A19 . . . . . 550, 721
897978A20 . . . . . 550, 721
897978A21 . . . . . 550, 721
897978A22 . . . . . 550, 721
897978A23 . . . . . 550, 721
897978A24 . . . . . 550, 721
897978A25 . . . . . 550, 721
897978A26 . . . . . 550, 721
897978A27 . . . . . 550, 721
897978A28 . . . . . 550, 721
897978A29 . . . . . 550, 721
897978A30 . . . . . 550, 721
897978A32 . . . . . 550, 721
897978A34 . . . . . 550, 721
897978A36 . . . . . 550, 721
897978A38 . . . . . 550, 721
897978A40 . . . . . 551, 721
897978A42 . . . . . 551, 721
897978A44 . . . . . 551, 722
897978A46 . . . . . 551, 722
897978A48 . . . . . 551, 722
897978A50 . . . . . 342, 345, 351, 354, 356, 359, 362, 365, 368, 372, 376, 388, 551, 722
897978B08 . . . . . 551, 722
897978B09 . . . . . 551, 722
897978B10 . . . . . 551, 722
897978B11 551
897978B12 . . . . . 551, 722
897978B13 . . . . . 551, 722
897978B14 . . . . . 551, 722
897978B15 . . . . . 551, 722
897978B16 . . . . . 551, 722
897978B17 . . . . . 551, 722
897978B18 . . . . . 551, 722
897978B19 . . . . . 551, 722
897978B20 . . . . . 551, 722
897978B22 . . . . . 551, 722
897978B23 . . . . . 551, 722

897978B24 . . . . . 552, 722
897978B25 . . . . . 552, 722
897978B26 . . . . . 552, 722
897978K01 . . . . . 49, 371, 375, 656
897978K02 . . . . . 49, 344, 656
897978K03 . . . . . 49, 349, 657
897978K04 . . . . . 49, 367, 656
897978T02 . . . . . 50, 344, 349, 367, 379, 657
897979A03 . . . . . 552, 723
897979A04 . . . . . 552, 723
897979A05 . . . . . 552, 723
897979A06 . . . . . 552, 723
897979A07 . . . . . 552, 723
897979A08 . . . . . 220, 552, 723
897979A09 . . . . . 220, 552, 723
897979A10 . . . . . 220, 552, 723
897979A11 . . . . . 220, 552, 723
897979A12 . . . . . 220, 552, 723
897979A13 . . . . . 220, 552, 723
897979A14 . . . . . 220, 552, 723
897979A15 . . . . . 220, 552, 723
897979A16 . . . . . 220, 552, 723
897979A17 . . . . . 220, 552, 723
897979A18 . . . . . 220, 552, 723
897979A19 . . . . . 220, 552, 723
897979A20 . . . . . 220, 552, 723
897979A21 . . . . . 220, 552, 723
897979A22 . . . . . 220, 552, 723
897979A23 . . . . . 552, 723
897979A24 . . . . . 552, 723
897979A25 . . . . . 553, 723
897979A26 . . . . . 553, 723
897979A27 . . . . . 553, 723
897979A28 . . . . . 553, 723
897979A29 . . . . . 553, 723
897979A30 . . . . . 553, 724
897979A32 . . . . . 553, 724
897979A34 . . . . . 553, 724
897979A36 . . . . . 553, 724
897979A38 . . . . . 553, 724
897979A40 . . . . . 553, 724
897979A42 . . . . . 553, 724
897979A44 . . . . . 553, 724
897979A46 . . . . . 553, 724
897979A50 . . . . . 553, 724
897979B12 724
897979B16 724
84 -898059T15 600
84 -898059T20 600
84 -898059T25 600
84 -898059T30 600
898082A03 . . . . . 678, 683
898091T01 630
898091T02 630
898091T03 630
898091T04 631
898101045 . . . . . 361, 706
898101189 . . . . . 706, 707
92 -898101384 332
92 -898101385 333
92 -898101387 331
92 -898101388 333
92 -898101389 333
92 -898101390 333
92 -898101391 337
57 -898101579 243
57 -898101624 242
87 -898101A01 . . . . . 44, 361
898101A45 . . . . . 361, 705, 706, 707
898103138 706
898103A90 . . . . . 25, 27, 360
898103A92 55
84 -898138T10 607
84 -898138T11 607
84 -898138T12 . . . . . 385, 607
84 -898138T50 385
84 -898138T70 607
84 -898138T80 607
84 -898138T90 607
84 -898160T01 . . . . . 586, 601
62 -898175 1052
84 -898180K01 646
62 -898200 1059
898235A01 . . . . . 169, 393
898235A02 . . . . . 169, 393
898245A01 . . . . . 93, 382, 386, 1027
898253T28 239
898259K01 . . . . . 385, 515
91 -898263A01 334
33 -898264001 . . . . . 120, 121, 121, 122, 122, 122, 122, 123, 123, 124, 124, 124, 124, 122, 123, 124, 124
898272048 242
79 -898283K11 448
79 -898283K14 441
84 -898284T01 . . . . . 586, 602
84 -898285T01 590
898289045 645
898289046 645
898289A21 . . . . . 351, 555
898289A48 645
898289A71 645
84 -898289A72 . . . . . 348, 378, 628

898289Q45 645
898289T42 . . . . . 586, 602
898289T47 645
84 -898289T74 591
84 -898289T75 590
84 -898289T76 590
84 -898289T77 . . . . . 382, 386, 663
84 -898289T78 663
84 -898289T79 . . . . . 382, 386, 663
898349A02 682
898349A03 682
898349A11 . . . . . 379, 383, 661, 681
898349A14 . . . . . 379, 383, 662, 681
898349A15 . . . . . 662, 681
898370A03 . . . . . 349, 383, 673, 684
898399K01 665
19 -898432 . . . . . 678, 683, 702
89876A 3 . . . . . 84, 181
33 -898829001 . . . . . 11, 12, 12, 233
898966A02 . . . . . 349, 383, 673, 684
48 -898988A46 . . . . . 806, 807, 809, 810, 811, 811, 812, 813, 823, 824, 825, 835, 837, 842, 851, 924
48 -898990A46 . . . . . 803, 804, 805, 806, 807, 809, 810, 811, 812, 813, 821, 822, 823, 824, 825, 835, 837, 842, 851, 924
48 -898991A46 . . . . . 806, 807, 809, 810, 811, 811, 812, 813, 821, 822, 823, 824, 835, 837, 842, 851
48 -898992A46 . . . . . 803, 804, 805, 806, 806, 807, 809, 810, 811, 812, 813, 821, 822, 823, 824, 825, 835, 837, 842, 851, 924
48 -898994A46 . . . . . 803, 804, 805, 806, 806, 807, 809, 810, 811, 811, 812, 813, 821, 821, 822, 823, 824, 825, 835, 837, 842, 851, 924
48 -898995A46 . . . . . 806, 807, 809, 812, 813, 823, 824, 835, 837, 842, 851
48 -898996A46 . . . . . 803, 804, 805, 806, 807, 809, 810, 811, 812, 813, 821, 822, 823, 824, 825, 835, 837, 842, 851, 924
48 -898998A46 . . . . . 803, 804, 805, 806, 807, 809, 810, 811, 812, 812, 813, 821, 822, 823, 824, 825, 835, 837, 842, 851, 924
48 -898999A46 . . . . . 805, 806, 807, 809, 810, 811, 812, 813, 821, 822, 823, 824, 835, 837, 842, 851
48 -899000A46 . . . . . 803, 804, 805, 806, 807, 809, 810, 811, 812, 813, 821, 822, 823, 824, 825, 835, 837, 842, 851, 924
48 -899002A46 . . . . . 803, 804, 805, 806, 807, 809, 810, 811, 812, 813, 821, 822, 823, 824, 825, 835, 837, 842, 851, 924
48 -899003A46 . . . . . 805, 806, 807, 809, 810, 811, 812, 813, 821, 822, 823, 824, 835, 837, 842, 851
48 -899004A46 . . . . . 834, 855
48 -899006A46 . . . . . 834, 855
899160A02 . . . . . 387, 671
87 -899178T01 517
87 -899180K01 638
48 -899202A46 . . . . . 803, 804, 805, 806, 809, 810, 811, 812, 813, 821, 822, 823, 824, 825, 835, 837, 842, 851
899203A01 616
89949A 1 . . . . . 104, 114, 115
18 - 89961 . . . . . 997, 1014
62 -899622T 1045
62 -899622T01 1045
62 -899623T 1045
62 -899623T01 1045
899625K02 . . . . . 344, 349, 371, 640
899625K04 . . . . . 344, 349, 371, 640
899625K05 . . . . . 382, 640
899625K06 . . . . . 385, 640
899625K07 640
899625K08 . . . . . 367, 640
62 -899692A01 1053
62 -899772 1044
62 -899773 1044
62 -899775 1044
62 -899776 1044
62 -899777 1044
62 -899778 1044
62 -899779 1044
50 -899783A01 . . . . . 38, 42, 361
84 -899785K02 613
84 -899785K04 . . . . . 381, 385, 613
84 -899785K15 612
84 -899785K30 612
48 -899818A05 . . . . . 832, 852
48 -899820A05 . . . . . 832, 852
47 - 89984T 4 230
899859K01 565
899859K02 566
899859K03 566
84 -899887T01 . . . . . 570, 578
84 -899887T02 579
84 -899887T07 580
84 -899887T08 580
84 -899887T09 580
84 -899887T13 . . . . . 570, 580
84 -899887T14 . . . . . 570, 580
84 -899887T17 . . . . . 570, 581
84 -899888T21 . . . . . 570, 580

84 -899888T22 . . . . . 570, 580
84 -899888T23 . . . . . 570, 581
84 -899889T05 607
84 -899889T10 607
84 -899889T15 607
84 -899889T20 607
84 -899889T25 607
84 -899889T30 607
84 -899889T35 607
84 -899889T40 607
84 -899889T45 607
84 -899889T50 607
84 -899889T55 607
84 -899889T60 607
62 -899895 1054
62 -899895001 1055
35 -8M0000202 180
35 -8M0000493 179
8M0001585 661
8M0001589 660
22 -8M0001721 . . . . . 78, 344, 348, 363, 367, 370, 374, 378
8M0001734 108
48 -8M0002277 885
48 -8M0002278 885
48 -8M0002279 885
48 -8M0002280 885
48 -8M0002281 886
48 -8M0002282 886
48 -8M0002283 886
48 -8M0002284 886
48 -8M0002285 886
48 -8M0002286 886
48 -8M0002287 886
48 -8M0002288 886
48 -8M0002289 886
48 -8M0002290 886
48 -8M0002293 886
48 -8M0002294 886
48 -8M0002295 886
48 -8M0002296 886
48 -8M0002297 887
48 -8M0002298 887
48 -8M0002299 887
48 -8M0002300 887
48 -8M0002301 887
48 -8M0002302 887
48 -8M0002303 887
48 -8M0002304 887
48 -8M0002305 887
48 -8M0002306 887
48 -8M0002307 885
48 -8M0002308 885
48 -8M0002309 885
48 -8M0002310 885
48 -8M0002311 886
48 -8M0002312 886
48 -8M0002313 886
48 -8M0002314 886
48 -8M0002315 886
48 -8M0002316 886
48 -8M0002317 886
48 -8M0002318 886
48 -8M0002319 886
48 -8M0002320 886
48 -8M0002321 886
48 -8M0002322 886
48 -8M0002323 886
48 -8M0002324 886
48 -8M0002325 886
48 -8M0002326 886
48 -8M0002327 887
48 -8M0002328 887
48 -8M0002329 887
48 -8M0002330 887
48 -8M0002331 887
48 -8M0002332 887
48 -8M0002333 887
48 -8M0002334 887
48 -8M0002335 887
48 -8M0002336 887
48 -8M0002337 885
48 -8M0002338 885
48 -8M0002339 886
48 -8M0002340 886
48 -8M0002341 886
48 -8M0002342 886
48 -8M0002343 886
48 -8M0002344 886
48 -8M0002345 886
48 -8M0002346 886
48 -8M0002347 886
48 -8M0002348 886
48 -8M0002349 886
48 -8M0002350 886
48 -8M0002351 886
48 -8M0002352 886
48 -8M0002353 886
48 -8M0002354 886
48 -8M0002355 886
48 -8M0002356 886
48 -8M0002357 887
48 -8M0002358 887
48 -8M0002359 887
48 -8M0002360 887
48 -8M0002361 887
48 -8M0002362 887
48 -8M0002363 887
48 -8M0002364 887
48 -8M0002365 887

48 -8M0002366 . . . 887
48 -8M0002367 . . . 885
48 -8M0002368 . . . 885
48 -8M0002369 . . . 886
48 -8M0002370 . . . 886
48 -8M0002371 . . . 886
48 -8M0002372 . . . 886
48 -8M0002373 . . . 886
48 -8M0002374 . . . 886
48 -8M0002375 . . . 886
48 -8M0002376 . . . 886
48 -8M0002377 . . . 886
48 -8M0002378 . . . 886
48 -8M0002379 . . . 886
48 -8M0002380 . . . 886
48 -8M0002381 . . . 886
48 -8M0002382 . . . 886
48 -8M0002383 . . . 886
48 -8M0002384 . . . 886
48 -8M0002385 . . . 886
48 -8M0002386 . . . 886
48 -8M0002387 . . . 887
48 -8M0002388 . . . 887
48 -8M0002389 . . . 887
48 -8M0002390 . . . 887
48 -8M0002391 . . . 887
48 -8M0002392 . . . 887
48 -8M0002393 . . . 887
48 -8M0002394 . . . 887
48 -8M0002395 . . . 887
48 -8M0002396 . . . 887
48 -8M0002397 . . . 885
48 -8M0002398 . . . 885
48 -8M0002399 . . . 886
48 -8M0002400 . . . 886
48 -8M0002401 . . . 886
48 -8M0002402 . . . 886
48 -8M0002403 . . . 886
48 -8M0002404 . . . 886
48 -8M0002405 . . . 886
48 -8M0002406 . . . 886
48 -8M0002407 . . . 886
48 -8M0002408 . . . 886
48 -8M0002409 . . . 886
48 -8M0002410 . . . 886
48 -8M0002411 . . . 886
48 -8M0002412 . . . 886
48 -8M0002413 . . . 886
48 -8M0002414 . . . 886
48 -8M0002415 . . . 886
48 -8M0002416 . . . 886
48 -8M0002417 . . . 887
48 -8M0002418 . . . 887
48 -8M0002419 . . . 887
48 -8M0002420 . . . 887
48 -8M0002421 . . . 887
48 -8M0002422 . . . 887
48 -8M0002423 . . . 887
48 -8M0002424 . . . 887
48 -8M0002425 . . . 887
48 -8M0002426 . . . 887
48 -8M0002427 . . . 885
48 -8M0002428 . . . 885
48 -8M0002429 . . . 886
48 -8M0002430 . . . 886
48 -8M0002431 . . . 886
48 -8M0002432 . . . 886
48 -8M0002433 . . . 886
48 -8M0002434 . . . 886
48 -8M0002435 . . . 886
48 -8M0002436 . . . 886
48 -8M0002437 . . . 886
48 -8M0002438 . . . 886
48 -8M0002439 . . . 886
48 -8M0002440 . . . 886
48 -8M0002441 . . . 886
48 -8M0002442 . . . 886
48 -8M0002443 . . . 886
48 -8M0002444 . . . 886
48 -8M0002445 . . . 886
48 -8M0002446 . . . 886
48 -8M0002447 . . . 887
48 -8M0002448 . . . 887
48 -8M0002449 . . . 887
48 -8M0002450 . . . 887
48 -8M0002451 . . . 887
48 -8M0002452 . . . 887
48 -8M0002453 . . . 887
48 -8M0002454 . . . 887
48 -8M0002455 . . . 887
48 -8M0002456 . . . 887
48 -8M0002457 . . . 885
48 -8M0002458 . . . 885
48 -8M0002459 . . . 886
48 -8M0002460 . . . 886
48 -8M0002461 . . . 886
48 -8M0002462 . . . 886
48 -8M0002463 . . . 886
48 -8M0002464 . . . 886
48 -8M0002465 . . . 886
48 -8M0002466 . . . 886
48 -8M0002467 . . . 886
48 -8M0002468 . . . 886
48 -8M0002469 . . . 886
48 -8M0002470 . . . 886
48 -8M0002471 . . . 886
48 -8M0002472 . . . 886
48 -8M0002473 . . . 886
48 -8M0002474 . . . 886
48 -8M0002475 . . . 887

48 -8M0002476 . . . 887
48 -8M0002477 . . . 887
48 -8M0002478 . . . 887
48 -8M0002479 . . . 887
48 -8M0002480 . . . 887
48 -8M0002481 . . . 887
48 -8M0002482 . . . 887
48 -8M0002483 . . . 887
48 -8M0002484 . . . 887
48 -8M0002485 . . . 887
48 -8M0002486 . . . 887
48 -8M0002487 . . . 885
48 -8M0002488 . . . 885
48 -8M0002489 . . . 886
48 -8M0002490 . . . 886
48 -8M0002491 . . . 886
48 -8M0002492 . . . 886
48 -8M0002493 . . . 886
48 -8M0002494 . . . 886
48 -8M0002495 . . . 886
48 -8M0002496 . . . 886
48 -8M0002497 . . . 886
48 -8M0002498 . . . 886
48 -8M0002499 . . . 886
48 -8M0002500 . . . 886
48 -8M0002501 . . . 886
48 -8M0002502 . . . 886
48 -8M0002503 . . . 886
48 -8M0002504 . . . 886
48 -8M0002505 . . . 887
48 -8M0002506 . . . 887
48 -8M0002507 . . . 887
48 -8M0002508 . . . 887
48 -8M0002509 . . . 887
48 -8M0002510 . . . 887
48 -8M0002511 . . . 887
48 -8M0002512 . . . 887
48 -8M0002513 . . . 887
48 -8M0002514 . . . 887
48 -8M0002515 . . . 887
48 -8M0002516 . . . 887
48 -8M0002517 . . . 885
48 -8M0002518 . . . 885
48 -8M0002519 . . . 886
48 -8M0002520 . . . 886
48 -8M0002521 . . . 886
48 -8M0002522 . . . 886
48 -8M0002523 . . . 886
48 -8M0002524 . . . 886
48 -8M0002525 . . . 886
48 -8M0002526 . . . 886
48 -8M0002527 . . . 886
48 -8M0002528 . . . 886
48 -8M0002529 . . . 886
48 -8M0002530 . . . 886
48 -8M0002531 . . . 886
48 -8M0002532 . . . 886
48 -8M0002533 . . . 886
48 -8M0002534 . . . 886
48 -8M0002535 . . . 887
48 -8M0002536 . . . 887
48 -8M0002537 . . . 887
48 -8M0002538 . . . 887
48 -8M0002539 . . . 887
48 -8M0002540 . . . 887
48 -8M0002541 . . . 887
48 -8M0002542 . . . 887
48 -8M0002543 . . . 887
48 -8M0002544 . . . 887
48 -8M0002545 . . . 887
48 -8M0002546 . . . 887
48 -8M0002547 . . . 885
48 -8M0002548 . . . 885
48 -8M0002549 . . . 886
48 -8M0002550 . . . 886
48 -8M0002551 . . . 886
48 -8M0002552 . . . 886
48 -8M0002553 . . . 886
48 -8M0002554 . . . 886
48 -8M0002555 . . . 886
48 -8M0002556 . . . 886
48 -8M0002557 . . . 886
48 -8M0002558 . . . 886
48 -8M0002559 . . . 886
48 -8M0002560 . . . 886
48 -8M0002561 . . . 886
48 -8M0002562 . . . 886
48 -8M0002563 . . . 886
48 -8M0002564 . . . 886
48 -8M0002565 . . . 887
48 -8M0002566 . . . 887
48 -8M0002567 . . . 887
48 -8M0002568 . . . 887
48 -8M0002569 . . . 887
48 -8M0002570 . . . 887
48 -8M0002571 . . . 887
48 -8M0002572 . . . 887
48 -8M0002573 . . . 887
48 -8M0002574 . . . 887
48 -8M0002575 . . . 887
48 -8M0002576 . . . 887
48 -8M0002577 . . . 885
48 -8M0002578 . . . 885
48 -8M0002579 . . . 886
48 -8M0002580 . . . 886
48 -8M0002581 . . . 886
48 -8M0002582 . . . 886
48 -8M0002583 . . . 886
48 -8M0002584 . . . 886
48 -8M0002585 . . . 886

48 -8M0002586 . . . 886
48 -8M0002587 . . . 886
48 -8M0002588 . . . 886
48 -8M0002589 . . . 886
48 -8M0002590 . . . 886
48 -8M0002591 . . . 886
48 -8M0002592 . . . 886
48 -8M0002593 . . . 886
48 -8M0002594 . . . 886
48 -8M0002595 . . . 887
48 -8M0002596 . . . 887
48 -8M0002597 . . . 887
48 -8M0002598 . . . 887
48 -8M0002599 . . . 887
48 -8M0002600 . . . 887
48 -8M0002601 . . . 887
48 -8M0002602 . . . 887
48 -8M0002603 . . . 887
48 -8M0002604 . . . 887
48 -8M0002605 . . . 887
48 -8M0002606 . . . 887
48 -8M0002607 . . . 885
48 -8M0002608 . . . 885
48 -8M0002609 . . . 886
48 -8M0002610 . . . 886
48 -8M0002611 . . . 886
48 -8M0002612 . . . 886
48 -8M0002613 . . . 886
48 -8M0002614 . . . 886
48 -8M0002615 . . . 886
48 -8M0002616 . . . 886
48 -8M0002617 . . . 886
48 -8M0002618 . . . 886
48 -8M0002619 . . . 886
48 -8M0002620 . . . 886
48 -8M0002621 . . . 886
48 -8M0002622 . . . 886
48 -8M0002623 . . . 886
48 -8M0002624 . . . 886
48 -8M0002625 . . . 887
48 -8M0002626 . . . 887
48 -8M0002627 . . . 887
48 -8M0002628 . . . 887
48 -8M0002629 . . . 887
48 -8M0002630 . . . 887
48 -8M0002631 . . . 887
48 -8M0002632 . . . 887
48 -8M0002633 . . . 887
48 -8M0002634 . . . 887
48 -8M0002635 . . . 887
48 -8M0002636 . . . 887
48 -8M0002637 . . . 885
48 -8M0002638 . . . 885
48 -8M0002639 . . . 886
48 -8M0002640 . . . 886
48 -8M0002641 . . . 886
48 -8M0002642 . . . 886
48 -8M0002643 . . . 886
48 -8M0002644 . . . 886
48 -8M0002645 . . . 886
48 -8M0002646 . . . 886
48 -8M0002647 . . . 886
48 -8M0002648 . . . 886
48 -8M0002649 . . . 886
48 -8M0002650 . . . 886
48 -8M0002651 . . . 886
48 -8M0002652 . . . 886
48 -8M0002653 . . . 886
48 -8M0002654 . . . 886
48 -8M0002655 . . . 887
48 -8M0002656 . . . 887
48 -8M0002657 . . . 887
48 -8M0002658 . . . 887
48 -8M0002659 . . . 887
48 -8M0002660 . . . 887
48 -8M0002661 . . . 887
48 -8M0002662 . . . 887
48 -8M0002663 . . . 887
48 -8M0002664 . . . 887
48 -8M0002665 . . . 887
48 -8M0002666 . . . 887
48 -8M0002667 . . . 899
48 -8M0002668 . . . 899
48 -8M0002669 . . . 899
48 -8M0002670 . . . 899
48 -8M0002671 . . . 899
48 -8M0002672 . . . 899
48 -8M0002673 . . . 899
48 -8M0002674 . . . 899
48 -8M0002675 . . . 899
48 -8M0002676 . . . 899
48 -8M0002677 . . . 900
48 -8M0002678 . . . 900
48 -8M0002679 . . . 900
48 -8M0002680 . . . 900
48 -8M0002681 . . . 900
48 -8M0002682 . . . 900
48 -8M0002683 . . . 900
48 -8M0002684 . . . 900
48 -8M0002685 . . . 900
48 -8M0002686 . . . 900
48 -8M0002687 . . . 900
48 -8M0002688 . . . 900
48 -8M0002689 . . . 900
48 -8M0002690 . . . 900
48 -8M0002691 . . . 900
48 -8M0002692 . . . 900
48 -8M0002693 . . . 901
48 -8M0002694 . . . 901
48 -8M0002695 . . . 901

48 -8M0002696 . . . 901
48 -8M0002697 . . . 899
48 -8M0002698 . . . 899
48 -8M0002699 . . . 899
48 -8M0002700 . . . 899
48 -8M0002701 . . . 899
48 -8M0002702 . . . 899
48 -8M0002703 . . . 899
48 -8M0002704 . . . 899
48 -8M0002705 . . . 899
48 -8M0002706 . . . 899
48 -8M0002707 . . . 900
48 -8M0002708 . . . 900
48 -8M0002709 . . . 900
48 -8M0002710 . . . 900
48 -8M0002711 . . . 900
48 -8M0002712 . . . 900
48 -8M0002713 . . . 900
48 -8M0002714 . . . 900
48 -8M0002715 . . . 900
48 -8M0002716 . . . 900
48 -8M0002717 . . . 900
48 -8M0002718 . . . 900
48 -8M0002719 . . . 900
48 -8M0002720 . . . 900
48 -8M0002721 . . . 900
48 -8M0002722 . . . 900
48 -8M0002723 . . . 901
48 -8M0002724 . . . 901
48 -8M0002725 . . . 901
48 -8M0002726 . . . 901
48 -8M0002727 . . . 899
48 -8M0002728 . . . 899
48 -8M0002729 . . . 899
48 -8M0002730 . . . 899
48 -8M0002731 . . . 899
48 -8M0002732 . . . 899
48 -8M0002733 . . . 899
48 -8M0002734 . . . 899
48 -8M0002735 . . . 899
48 -8M0002736 . . . 899
48 -8M0002737 . . . 900
48 -8M0002738 . . . 900
48 -8M0002739 . . . 900
48 -8M0002740 . . . 900
48 -8M0002741 . . . 900
48 -8M0002742 . . . 900
48 -8M0002743 . . . 900
48 -8M0002744 . . . 900
48 -8M0002745 . . . 900
48 -8M0002746 . . . 900
48 -8M0002747 . . . 900
48 -8M0002748 . . . 900
48 -8M0002749 . . . 900
48 -8M0002750 . . . 900
48 -8M0002751 . . . 900
48 -8M0002752 . . . 900
48 -8M0002753 . . . 901
48 -8M0002754 . . . 901
48 -8M0002755 . . . 901
48 -8M0002756 . . . 901
48 -8M0002757 . . . 899
48 -8M0002758 . . . 899
48 -8M0002759 . . . 899
48 -8M0002760 . . . 899
48 -8M0002761 . . . 899
48 -8M0002762 . . . 899
48 -8M0002763 . . . 899
48 -8M0002764 . . . 899
48 -8M0002765 . . . 899
48 -8M0002766 . . . 899
48 -8M0002767 . . . 900
48 -8M0002768 . . . 900
48 -8M0002769 . . . 900
48 -8M0002770 . . . 900
48 -8M0002771 . . . 900
48 -8M0002772 . . . 900
48 -8M0002773 . . . 900
48 -8M0002774 . . . 900
48 -8M0002775 . . . 900
48 -8M0002776 . . . 900
48 -8M0002777 . . . 900
48 -8M0002778 . . . 900
48 -8M0002779 . . . 900
48 -8M0002780 . . . 900
48 -8M0002781 . . . 900
48 -8M0002782 . . . 900
48 -8M0002783 . . . 901
48 -8M0002784 . . . 901
48 -8M0002785 . . . 901
48 -8M0002786 . . . 901
48 -8M0002787 . . . 899
48 -8M0002788 . . . 899
48 -8M0002789 . . . 899
48 -8M0002790 . . . 899
48 -8M0002791 . . . 899
48 -8M0002792 . . . 899
48 -8M0002793 . . . 899
48 -8M0002794 . . . 899
48 -8M0002795 . . . 899
48 -8M0002796 . . . 899
48 -8M0002797 . . . 900
48 -8M0002798 . . . 900
48 -8M0002799 . . . 900
48 -8M0002800 . . . 900
48 -8M0002801 . . . 900
48 -8M0002802 . . . 900
48 -8M0002803 . . . 900
48 -8M0002804 . . . 900
48 -8M0002805 . . . 900

48 -8M0002806 900
48 -8M0002807 900
48 -8M0002808 900
48 -8M0002809 900
48 -8M0002810 900
48 -8M0002811 900
48 -8M0002812 900
48 -8M0002813 901
48 -8M0002814 901
48 -8M0002815 901
48 -8M0002816 901
48 -8M0002817 899
48 -8M0002818 899
48 -8M0002819 899
48 -8M0002820 899
48 -8M0002821 899
48 -8M0002822 899
48 -8M0002823 899
48 -8M0002824 899
48 -8M0002825 899
48 -8M0002826 899
48 -8M0002827 900
48 -8M0002828 900
48 -8M0002829 900
48 -8M0002830 900
48 -8M0002831 900
48 -8M0002832 900
48 -8M0002833 900
48 -8M0002834 900
48 -8M0002835 900
48 -8M0002836 900
48 -8M0002837 900
48 -8M0002838 900
48 -8M0002839 900
48 -8M0002840 900
48 -8M0002841 900
48 -8M0002842 900
48 -8M0002843 901
48 -8M0002844 901
48 -8M0002845 901
48 -8M0002846 901
48 -8M0002847 899
48 -8M0002848 899
48 -8M0002849 899
48 -8M0002850 899
48 -8M0002851 899
48 -8M0002852 899
48 -8M0002853 899
48 -8M0002854 899
48 -8M0002855 899
48 -8M0002856 899
48 -8M0002857 900
48 -8M0002858 900
48 -8M0002859 900
48 -8M0002860 900
48 -8M0002861 900
48 -8M0002862 900
48 -8M0002863 900
48 -8M0002864 900
48 -8M0002865 900
48 -8M0002866 900
48 -8M0002867 900
48 -8M0002868 900
48 -8M0002869 900
48 -8M0002870 900
48 -8M0002871 900
48 -8M0002872 900
48 -8M0002873 901
48 -8M0002874 901
48 -8M0002875 901
48 -8M0002876 901
48 -8M0002877 899
48 -8M0002878 899
48 -8M0002879 899
48 -8M0002880 899
48 -8M0002881 899
48 -8M0002882 899
48 -8M0002883 899
48 -8M0002884 899
48 -8M0002885 899
48 -8M0002886 899
48 -8M0002887 900
48 -8M0002888 900
48 -8M0002889 900
48 -8M0002890 900
48 -8M0002891 900
48 -8M0002892 900
48 -8M0002893 900
48 -8M0002894 900
48 -8M0002895 900
48 -8M0002896 900
48 -8M0002897 900
48 -8M0002898 900
48 -8M0002899 900
48 -8M0002900 900
48 -8M0002901 900
48 -8M0002902 900
48 -8M0002903 901
48 -8M0002904 901
48 -8M0002905 901
48 -8M0002906 901
48 -8M0002907 899
48 -8M0002908 899
48 -8M0002909 899
48 -8M0002910 899
48 -8M0002911 899
48 -8M0002912 899
48 -8M0002913 899
48 -8M0002914 899
48 -8M0002915 899

48 -8M0002916 . . . 899
48 -8M0002917 . . . 900
48 -8M0002918 . . . 900
48 -8M0002919 . . . 900
48 -8M0002920 . . . 900
48 -8M0002921 . . . 900
48 -8M0002922 . . . 900
48 -8M0002923 . . . 900
48 -8M0002924 . . . 900
48 -8M0002925 . . . 900
48 -8M0002926 . . . 900
48 -8M0002927 . . . 900
48 -8M0002928 . . . 900
48 -8M0002929 . . . 900
48 -8M0002930 . . . 900
48 -8M0002931 . . . 900
48 -8M0002932 . . . 900
48 -8M0002933 . . . 901
48 -8M0002934 . . . 901
48 -8M0002935 . . . 901
48 -8M0002936 . . . 901
48 -8M0002937 . . . 899
48 -8M0002938 . . . 899
48 -8M0002939 . . . 899
48 -8M0002940 . . . 899
48 -8M0002941 . . . 899
48 -8M0002942 . . . 899
48 -8M0002943 . . . 899
48 -8M0002944 . . . 899
48 -8M0002945 . . . 900
48 -8M0002946 . . . 900
48 -8M0002947 . . . 900
48 -8M0002948 . . . 900
48 -8M0002949 . . . 900
48 -8M0002950 . . . 900
48 -8M0002951 . . . 900
48 -8M0002952 . . . 900
48 -8M0002953 . . . 900
48 -8M0002954 . . . 900
48 -8M0002955 . . . 900
48 -8M0002956 . . . 900
48 -8M0002957 . . . 900
48 -8M0002958 . . . 900
48 -8M0002959 . . . 900
48 -8M0002960 . . . 900
48 -8M0002961 . . . 900
48 -8M0002962 . . . 900
48 -8M0002963 . . . 901
48 -8M0002964 . . . 901
48 -8M0002965 . . . 901
48 -8M0002966 . . . 901
48 -8M0002967 . . . 899
48 -8M0002968 . . . 899
48 -8M0002969 . . . 899
48 -8M0002970 . . . 899
48 -8M0002971 . . . 899
48 -8M0002972 . . . 899
48 -8M0002973 . . . 899
48 -8M0002974 . . . 899
48 -8M0002975 . . . 900
48 -8M0002976 . . . 900
48 -8M0002977 . . . 900
48 -8M0002978 . . . 900
48 -8M0002979 . . . 900
48 -8M0002980 . . . 900
48 -8M0002981 . . . 900
48 -8M0002982 . . . 900
48 -8M0002983 . . . 900
48 -8M0002984 . . . 900
48 -8M0002985 . . . 900
48 -8M0002986 . . . 900
48 -8M0002987 . . . 900
48 -8M0002988 . . . 900
48 -8M0002989 . . . 900
48 -8M0002990 . . . 900
48 -8M0002991 . . . 900
48 -8M0002992 . . . 900
48 -8M0002993 . . . 901
48 -8M0002994 . . . 901
48 -8M0002995 . . . 901
48 -8M0002996 . . . 901
48 -8M0002997 . . . 899
48 -8M0002998 . . . 899
48 -8M0002999 . . . 899
48 -8M0003000 . . . 899
48 -8M0003001 . . . 899
48 -8M0003002 . . . 899
48 -8M0003003 . . . 899
48 -8M0003004 . . . 899
48 -8M0003005 . . . 900
48 -8M0003006 . . . 900
48 -8M0003007 . . . 900
48 -8M0003008 . . . 900
48 -8M0003009 . . . 900
48 -8M0003010 . . . 900
48 -8M0003011 . . . 900
48 -8M0003012 . . . 900
48 -8M0003013 . . . 900
48 -8M0003014 . . . 900
48 -8M0003015 . . . 900
48 -8M0003016 . . . 900
48 -8M0003017 . . . 900
48 -8M0003018 . . . 900
48 -8M0003019 . . . 900
48 -8M0003020 . . . 900
48 -8M0003021 . . . 900
48 -8M0003022 . . . 900
48 -8M0003023 . . . 901
48 -8M0003024 . . . 901
48 -8M0003025 . . . 901

48 -8M0003026 901
48 -8M0003027 899
48 -8M0003028 899
48 -8M0003029 899
48 -8M0003030 899
48 -8M0003031 899
48 -8M0003032 899
48 -8M0003033 899
48 -8M0003034 899
48 -8M0003035 900
48 -8M0003036 900
48 -8M0003037 900
48 -8M0003038 900
48 -8M0003039 900
48 -8M0003040 900
48 -8M0003041 900
48 -8M0003042 900
48 -8M0003043 900
48 -8M0003044 900
48 -8M0003045 900
48 -8M0003046 900
48 -8M0003047 900
48 -8M0003048 900
48 -8M0003049 900
48 -8M0003050 900
48 -8M0003051 900
48 -8M0003052 900
48 -8M0003053 901
48 -8M0003054 901
48 -8M0003055 901
48 -8M0003056 901
48 -8M0003447 887
48 -8M0003448 887
48 -8M0003449 887
48 -8M0003450 887
48 -8M0003451 887
48 -8M0003452 887
48 -8M0003453 888
48 -8M0003454 888
48 -8M0003455 888
48 -8M0003456 888
48 -8M0003457 888
48 -8M0003458 888
48 -8M0003459 888
48 -8M0003460 888
48 -8M0003461 . . . . . 886, 888
48 -8M0003462 . . . . . 886, 888
48 -8M0003463 888
48 -8M0003464 888
48 -8M0003465 888
48 -8M0003466 888
48 -8M0003467 888
48 -8M0003468 888
48 -8M0003469 889
48 -8M0003470 889
48 -8M0003471 889
48 -8M0003472 889
48 -8M0003473 889
48 -8M0003474 889
48 -8M0003475 889
48 -8M0003476 889
48 -8M0003479 887
48 -8M0003480 887
48 -8M0003481 887
48 -8M0003482 887
48 -8M0003483 888
48 -8M0003484 888
48 -8M0003485 888
48 -8M0003486 888
48 -8M0003487 888
48 -8M0003488 888
48 -8M0003489 888
48 -8M0003490 888
48 -8M0003491 888
48 -8M0003492 888
48 -8M0003493 888
48 -8M0003494 888
48 -8M0003495 888
48 -8M0003496 888
48 -8M0003497 888
48 -8M0003498 888
48 -8M0003499 889
48 -8M0003500 889
48 -8M0003501 889
48 -8M0003502 889
48 -8M0003503 889
48 -8M0003504 889
48 -8M0003505 889
48 -8M0003506 889
48 -8M0003507 887
48 -8M0003508 887
48 -8M0003511 887
48 -8M0003512 887
48 -8M0003513 888
48 -8M0003514 888
48 -8M0003515 888
48 -8M0003516 888
48 -8M0003517 888
48 -8M0003518 888
48 -8M0003519 888
48 -8M0003520 888
48 -8M0003521 888
48 -8M0003522 888
48 -8M0003523 888
48 -8M0003524 888
48 -8M0003525 888
48 -8M0003526 888
48 -8M0003527 888
48 -8M0003528 888
48 -8M0003529 889

48 -8M0003530 . . . 889
48 -8M0003531 . . . 889
48 -8M0003532 . . . 889
48 -8M0003533 . . . 889
48 -8M0003534 . . . 889
48 -8M0003535 . . . 889
48 -8M0003536 . . . 889
48 -8M0003537 . . . 887
48 -8M0003538 . . . 887
48 -8M0003539 . . . 887
48 -8M0003541 . . . 888
48 -8M0003542 . . . 888
48 -8M0003543 . . . 888
48 -8M0003544 . . . 888
48 -8M0003545 . . . 888
48 -8M0003546 . . . 888
48 -8M0003547 . . . 888
48 -8M0003548 . . . 888
48 -8M0003549 . . . 888
48 -8M0003550 . . . 888
48 -8M0003551 . . . 888
48 -8M0003552 . . . 888
48 -8M0003553 . . . 888
48 -8M0003554 . . . 888
48 -8M0003555 . . . 888
48 -8M0003556 . . . 888
48 -8M0003557 . . . 888
48 -8M0003558 . . . 888
48 -8M0003559 . . . 889
48 -8M0003560 . . . 889
48 -8M0003561 . . . 889
48 -8M0003562 . . . 889
48 -8M0003563 . . . 889
48 -8M0003564 . . . 889
48 -8M0003565 . . . 889
48 -8M0003566 . . . 889
48 -8M0003567 . . . 887
48 -8M0003568 . . . 887
48 -8M0003569 . . . 887
48 -8M0003570 . . . 887
48 -8M0003571 . . . 888
48 -8M0003572 . . . 888
48 -8M0003573 . . . 888
48 -8M0003574 . . . 888
48 -8M0003575 . . . 888
48 -8M0003576 . . . 888
48 -8M0003577 . . . 888
48 -8M0003578 . . . 888
48 -8M0003579 . . . 888
48 -8M0003580 . . . 888
48 -8M0003581 . . . 888
48 -8M0003582 . . . 888
48 -8M0003583 . . . 888
48 -8M0003584 . . . 888
48 -8M0003585 . . . 888
48 -8M0003586 . . . 888
48 -8M0003587 . . . 888
48 -8M0003588 . . . 888
48 -8M0003589 . . . 889
48 -8M0003590 . . . 889
48 -8M0003591 . . . 889
48 -8M0003592 . . . 889
48 -8M0003593 . . . 889
48 -8M0003594 . . . 889
48 -8M0003595 . . . 889
48 -8M0003596 . . . 889
48 -8M0003597 . . . 887
48 -8M0003598 . . . 887
48 -8M0003599 . . . 887
48 -8M0003600 . . . 887
48 -8M0003601 . . . 888
48 -8M0003602 . . . 888
48 -8M0003603 . . . 888
48 -8M0003604 . . . 888
48 -8M0003605 . . . 888
48 -8M0003606 . . . 888
48 -8M0003607 . . . 888
48 -8M0003608 . . . 888
48 -8M0003609 . . . 888
48 -8M0003610 . . . 888
48 -8M0003611 . . . 888
48 -8M0003612 . . . 888
48 -8M0003613 . . . 888
48 -8M0003614 . . . 888
48 -8M0003615 . . . 888
48 -8M0003616 . . . 888
48 -8M0003617 . . . 888
48 -8M0003618 . . . 888
48 -8M0003619 . . . 889
48 -8M0003620 . . . 889
48 -8M0003621 . . . 889
48 -8M0003622 . . . 889
48 -8M0003623 . . . 889
48 -8M0003624 . . . 889
48 -8M0003625 . . . 889
48 -8M0003626 . . . 889
48 -8M0003627 . . . 887
48 -8M0003628 . . . 887
48 -8M0003629 . . . 887
48 -8M0003630 . . . 887
48 -8M0003631 . . . 888
48 -8M0003632 . . . 888
48 -8M0003633 . . . 888
48 -8M0003634 . . . 888
48 -8M0003635 . . . 888
48 -8M0003636 . . . 888
48 -8M0003637 . . . 888
48 -8M0003638 . . . 888
48 -8M0003639 . . . 888
48 -8M0003640 . . . 888

48 -8M0003641 . . . 888
48 -8M0003642 . . . 888
48 -8M0003643 . . . 888
48 -8M0003644 . . . 888
48 -8M0003645 . . . 888
48 -8M0003646 . . . 888
48 -8M0003647 . . . 888
48 -8M0003648 . . . 888
48 -8M0003649 . . . 889
48 -8M0003650 . . . 889
48 -8M0003651 . . . 889
48 -8M0003652 . . . 889
48 -8M0003653 . . . 889
48 -8M0003654 . . . 889
48 -8M0003655 . . . 889
48 -8M0003656 . . . 889
48 -8M0003657 . . . 887
48 -8M0003658 . . . 887
48 -8M0003659 . . . 887
48 -8M0003660 . . . 887
48 -8M0003661 . . . 888
48 -8M0003662 . . . 888
48 -8M0003663 . . . 888
48 -8M0003664 . . . 888
48 -8M0003665 . . . 888
48 -8M0003666 . . . 888
48 -8M0003667 . . . 888
48 -8M0003668 . . . 888
48 -8M0003669 . . . 888
48 -8M0003670 . . . 888
48 -8M0003671 . . . 888
48 -8M0003672 . . . 888
48 -8M0003673 . . . 888
48 -8M0003674 . . . 888
48 -8M0003675 . . . 888
48 -8M0003676 . . . 888
48 -8M0003677 . . . 889
48 -8M0003678 . . . 889
48 -8M0003679 . . . 889
48 -8M0003680 . . . 889
48 -8M0003681 . . . 889
48 -8M0003682 . . . 889
48 -8M0003683 . . . 889
48 -8M0003684 . . . 889
48 -8M0003685 . . . 889
48 -8M0003686 . . . 889
48 -8M0003687 . . . 887
48 -8M0003688 . . . 887
48 -8M0003691 . . . 888
48 -8M0003692 . . . 888
48 -8M0003693 . . . 888
48 -8M0003694 . . . 888
48 -8M0003695 . . . 888
48 -8M0003696 . . . 888
48 -8M0003697 . . . 888
48 -8M0003698 . . . 888
48 -8M0003699 . . . 888
48 -8M0003700 . . . 888
48 -8M0003701 . . . 888
48 -8M0003702 . . . 888
48 -8M0003703 . . . 888
48 -8M0003704 . . . 888
48 -8M0003705 . . . 888
48 -8M0003706 . . . 888
48 -8M0003707 . . . 889
48 -8M0003708 . . . 889
48 -8M0003709 . . . 889
48 -8M0003710 . . . 889
48 -8M0003711 . . . 889
48 -8M0003712 . . . 889
48 -8M0003713 . . . 889
48 -8M0003714 . . . 889
48 -8M0003715 . . . 889
48 -8M0003716 . . . 889
48 -8M0003717 . . . 887
48 -8M0003718 . . . 887
48 -8M0003719 . . . 887
48 -8M0003720 . . . 887
48 -8M0003721 . . . 888
48 -8M0003722 . . . 888
48 -8M0003723 . . . 888
48 -8M0003724 . . . 888
48 -8M0003725 . . . 888
48 -8M0003726 . . . 888
48 -8M0003727 . . . 888
48 -8M0003728 . . . 888
48 -8M0003729 . . . 888
48 -8M0003730 . . . 888
48 -8M0003731 . . . 888
48 -8M0003732 . . . 888
48 -8M0003733 . . . 888
48 -8M0003734 . . . 888
48 -8M0003737 . . . 889
48 -8M0003738 . . . 889
48 -8M0003739 . . . 889
48 -8M0003740 . . . 889
48 -8M0003741 . . . 889
48 -8M0003742 . . . 889
48 -8M0003743 . . . 889
48 -8M0003744 . . . 889
48 -8M0003745 . . . 889
48 -8M0003746 . . . 889
48 -8M0003747 . . . 887
48 -8M0003748 . . . 887
48 -8M0003749 . . . 887
48 -8M0003750 . . . 887
48 -8M0003751 . . . 888
48 -8M0003752 . . . 888
48 -8M0003753 . . . 888
48 -8M0003754 . . . 888

48 -8M0003755 . . . 888
48 -8M0003756 . . . 888
48 -8M0003757 . . . 888
48 -8M0003758 . . . 888
48 -8M0003759 . . . 888
48 -8M0003760 . . . 888
48 -8M0003761 . . . 888
48 -8M0003762 . . . 888
48 -8M0003763 . . . 888
48 -8M0003764 . . . 888
48 -8M0003765 . . . 888
48 -8M0003766 . . . 888
48 -8M0003767 . . . 889
48 -8M0003768 . . . 889
48 -8M0003769 . . . 889
48 -8M0003770 . . . 889
48 -8M0003771 . . . 889
48 -8M0003772 . . . 889
48 -8M0003773 . . . 889
48 -8M0003774 . . . 889
48 -8M0003775 . . . 889
48 -8M0003776 . . . 889
48 -8M0003777 . . . 887
48 -8M0003778 . . . 887
48 -8M0003779 . . . 887
48 -8M0003780 . . . 887
48 -8M0003781 . . . 888
48 -8M0003782 . . . 888
48 -8M0003783 . . . 888
48 -8M0003784 . . . 888
48 -8M0003785 . . . 888
48 -8M0003786 . . . 888
48 -8M0003787 . . . 888
48 -8M0003788 . . . 888
48 -8M0003789 . . . 888
48 -8M0003790 . . . 888
48 -8M0003791 . . . 888
48 -8M0003792 . . . 888
48 -8M0003793 . . . 888
48 -8M0003794 . . . 888
48 -8M0003795 . . . 888
48 -8M0003796 . . . 888
48 -8M0003797 . . . 889
48 -8M0003798 . . . 889
48 -8M0003799 . . . 889
48 -8M0003800 . . . 889
48 -8M0003801 . . . 889
48 -8M0003802 . . . 889
48 -8M0003803 . . . 889
48 -8M0003804 . . . 889
48 -8M0003805 . . . 889
48 -8M0003806 . . . 889
48 -8M0003807 . . . 887
48 -8M0003808 . . . 887
48 -8M0003809 . . . 887
48 -8M0003810 . . . 887
48 -8M0003811 . . . 888
48 -8M0003812 . . . 888
48 -8M0003813 . . . 888
48 -8M0003814 . . . 888
48 -8M0003815 . . . 888
48 -8M0003816 . . . 888
48 -8M0003817 . . . 888
48 -8M0003818 . . . 888
48 -8M0003819 . . . 888
48 -8M0003820 . . . 888
48 -8M0003821 . . . 888
48 -8M0003822 . . . 888
48 -8M0003823 . . . 888
48 -8M0003824 . . . 888
48 -8M0003825 . . . 888
48 -8M0003826 . . . 888
48 -8M0003827 . . . 889
48 -8M0003828 . . . 889
48 -8M0003829 . . . 889
48 -8M0003830 . . . 889
48 -8M0003831 . . . 889
48 -8M0003832 . . . 889
48 -8M0003835 . . . 888, 889
48 -8M0003836 . . . 888, 889
48 -8M0003837 . . . 901
48 -8M0003838 . . . 901
48 -8M0003839 . . . 901
48 -8M0003840 . . . 901
48 -8M0003841 . . . 901
48 -8M0003842 . . . 901
48 -8M0003843 . . . 901
48 -8M0003844 . . . 901
48 -8M0003845 . . . 901
48 -8M0003846 . . . 901
48 -8M0003847 . . . 901
48 -8M0003848 . . . 901
48 -8M0003849 . . . 902
48 -8M0003850 . . . 902
48 -8M0003851 . . . 902
48 -8M0003852 . . . 902
48 -8M0003853 . . . 902
48 -8M0003854 . . . 902
48 -8M0003855 . . . 902
48 -8M0003856 . . . 902
48 -8M0003857 . . . 902
48 -8M0003858 . . . 902
48 -8M0003859 . . . 902
48 -8M0003860 . . . 902
48 -8M0003861 . . . 902
48 -8M0003862 . . . 902
48 -8M0003863 . . . 902
48 -8M0003864 . . . 902
48 -8M0003865 . . . 902
48 -8M0003866 . . . 902

48 -8M0003867 . . . 901
48 -8M0003868 . . . 901
48 -8M0003869 . . . 901
48 -8M0003870 . . . 901
48 -8M0003871 . . . 901
48 -8M0003872 . . . 901
48 -8M0003873 . . . 901
48 -8M0003874 . . . 901
48 -8M0003875 . . . 901
48 -8M0003876 . . . 901
48 -8M0003877 . . . 901
48 -8M0003878 . . . 901
48 -8M0003879 . . . 902
48 -8M0003880 . . . 902
48 -8M0003881 . . . 902
48 -8M0003882 . . . 902
48 -8M0003883 . . . 902
48 -8M0003884 . . . 902
48 -8M0003885 . . . 902
48 -8M0003886 . . . 902
48 -8M0003887 . . . 902
48 -8M0003888 . . . 902
48 -8M0003889 . . . 902
48 -8M0003890 . . . 902
48 -8M0003891 . . . 902
48 -8M0003892 . . . 902
48 -8M0003893 . . . 902
48 -8M0003894 . . . 902
48 -8M0003895 . . . 903
48 -8M0003896 . . . 903
48 -8M0003897 . . . 901
48 -8M0003898 . . . 901
48 -8M0003899 . . . 901
48 -8M0003900 . . . 901
48 -8M0003901 . . . 901
48 -8M0003902 . . . 901
48 -8M0003903 . . . 901
48 -8M0003904 . . . 901
48 -8M0003905 . . . 901
48 -8M0003906 . . . 901
48 -8M0003907 . . . 901
48 -8M0003908 . . . 901
48 -8M0003909 . . . 902
48 -8M0003910 . . . 902
48 -8M0003911 . . . 902
48 -8M0003912 . . . 902
48 -8M0003913 . . . 902
48 -8M0003914 . . . 902
48 -8M0003915 . . . 902
48 -8M0003916 . . . 902
48 -8M0003917 . . . 902
48 -8M0003918 . . . 902
48 -8M0003919 . . . 902
48 -8M0003920 . . . 902
48 -8M0003921 . . . 902
48 -8M0003922 . . . 902
48 -8M0003923 . . . 902
48 -8M0003924 . . . 902
48 -8M0003925 . . . 903
48 -8M0003926 . . . 903
48 -8M0003927 . . . 901
48 -8M0003928 . . . 901
48 -8M0003929 . . . 901
48 -8M0003930 . . . 901
48 -8M0003931 . . . 901
48 -8M0003932 . . . 901
48 -8M0003933 . . . 901
48 -8M0003934 . . . 901
48 -8M0003935 . . . 901
48 -8M0003936 . . . 901
48 -8M0003937 . . . 901
48 -8M0003938 . . . 901
48 -8M0003939 . . . 902
48 -8M0003940 . . . 902
48 -8M0003941 . . . 902
48 -8M0003942 . . . 902
48 -8M0003943 . . . 902
48 -8M0003944 . . . 902
48 -8M0003945 . . . 902
48 -8M0003946 . . . 902
48 -8M0003947 . . . 902
48 -8M0003948 . . . 902
48 -8M0003949 . . . 902
48 -8M0003950 . . . 902
48 -8M0003951 . . . 902
48 -8M0003952 . . . 902
48 -8M0003953 . . . 902
48 -8M0003954 . . . 902
48 -8M0003955 . . . 903
48 -8M0003956 . . . 903
48 -8M0003957 . . . 901
48 -8M0003958 . . . 901
48 -8M0003959 . . . 901
48 -8M0003960 . . . 901
48 -8M0003961 . . . 901
48 -8M0003962 . . . 901
48 -8M0003963 . . . 901
48 -8M0003964 . . . 901
48 -8M0003965 . . . 901
48 -8M0003966 . . . 901
48 -8M0003967 . . . 901
48 -8M0003968 . . . 901
48 -8M0003969 . . . 902
48 -8M0003970 . . . 902
48 -8M0003971 . . . 902
48 -8M0003972 . . . 902
48 -8M0003973 . . . 902
48 -8M0003974 . . . 902
48 -8M0003975 . . . 902
48 -8M0003976 . . . 902

48 -8M0003977 . . . 902
48 -8M0003978 . . . 902
48 -8M0003979 . . . 902
48 -8M0003980 . . . 902
48 -8M0003981 . . . 902
48 -8M0003982 . . . 902
48 -8M0003983 . . . 902
48 -8M0003984 . . . 902
48 -8M0003985 . . . 903
48 -8M0003986 . . . 903
48 -8M0003987 . . . 901
48 -8M0003988 . . . 901
48 -8M0003989 . . . 901
48 -8M0003990 . . . 901
48 -8M0003991 . . . 901
48 -8M0003992 . . . 901
48 -8M0003993 . . . 901
48 -8M0003994 . . . 901
48 -8M0003995 . . . 901
48 -8M0003996 . . . 901
48 -8M0003997 . . . 901
48 -8M0003998 . . . 901
48 -8M0003999 . . . 902
48 -8M0004000 . . . 902
48 -8M0004001 . . . 902
48 -8M0004002 . . . 902
48 -8M0004003 . . . 902
48 -8M0004004 . . . 902
48 -8M0004005 . . . 902
48 -8M0004006 . . . 902
48 -8M0004007 . . . 902
48 -8M0004008 . . . 902
48 -8M0004009 . . . 902
48 -8M0004010 . . . 902
48 -8M0004011 . . . 902
48 -8M0004012 . . . 902
48 -8M0004013 . . . 902
48 -8M0004014 . . . 902
48 -8M0004015 . . . 903
48 -8M0004016 . . . 903
48 -8M0004017 . . . 901
48 -8M0004018 . . . 901
48 -8M0004019 . . . 901
48 -8M0004020 . . . 901
48 -8M0004021 . . . 901
48 -8M0004022 . . . 901
48 -8M0004023 . . . 901
48 -8M0004024 . . . 901
48 -8M0004025 . . . 901
48 -8M0004026 . . . 901
48 -8M0004027 . . . 901
48 -8M0004028 . . . 901
48 -8M0004029 . . . 902
48 -8M0004030 . . . 902
48 -8M0004031 . . . 902
48 -8M0004032 . . . 902
48 -8M0004033 . . . 902
48 -8M0004034 . . . 902
48 -8M0004035 . . . 902
48 -8M0004036 . . . 902
48 -8M0004037 . . . 902
48 -8M0004038 . . . 902
48 -8M0004039 . . . 902
48 -8M0004040 . . . 902
48 -8M0004041 . . . 902
48 -8M0004042 . . . 902
48 -8M0004043 . . . 902
48 -8M0004044 . . . 902
48 -8M0004045 . . . 903
48 -8M0004046 . . . 903
48 -8M0004047 . . . 901
48 -8M0004048 . . . 901
48 -8M0004049 . . . 901
48 -8M0004050 . . . 901
48 -8M0004051 . . . 901
48 -8M0004052 . . . 901
48 -8M0004053 . . . 901
48 -8M0004054 . . . 901
48 -8M0004055 . . . 901
48 -8M0004056 . . . 901
48 -8M0004057 . . . 901
48 -8M0004058 . . . 901
48 -8M0004059 . . . 902
48 -8M0004060 . . . 902
48 -8M0004061 . . . 902
48 -8M0004062 . . . 902
48 -8M0004063 . . . 902
48 -8M0004064 . . . 902
48 -8M0004065 . . . 902
48 -8M0004066 . . . 902
48 -8M0004067 . . . 902
48 -8M0004068 . . . 902
48 -8M0004069 . . . 902
48 -8M0004070 . . . 902
48 -8M0004071 . . . 902
48 -8M0004072 . . . 902
48 -8M0004073 . . . 902
48 -8M0004074 . . . 902
48 -8M0004075 . . . 903
48 -8M0004076 . . . 903
48 -8M0004077 . . . 901
48 -8M0004078 . . . 901
48 -8M0004079 . . . 901
48 -8M0004080 . . . 901
48 -8M0004081 . . . 901
48 -8M0004082 . . . 901
48 -8M0004083 . . . 901
48 -8M0004084 . . . 901
48 -8M0004085 . . . 901
48 -8M0004086 . . . 901

48 -8M0004087 901
48 -8M0004088 901
48 -8M0004089 902
48 -8M0004090 902
48 -8M0004091 902
48 -8M0004092 902
48 -8M0004093 902
48 -8M0004094 902
48 -8M0004095 902
48 -8M0004096 902
48 -8M0004097 902
48 -8M0004098 902
48 -8M0004099 902
48 -8M0004100 902
48 -8M0004101 902
48 -8M0004102 902
48 -8M0004103 902
48 -8M0004104 902
48 -8M0004105 903
48 -8M0004106 903
48 -8M0004107 901
48 -8M0004108 901
48 -8M0004109 901
48 -8M0004110 901
48 -8M0004111 901
48 -8M0004112 901
48 -8M0004113 901
48 -8M0004114 901
48 -8M0004115 901
48 -8M0004116 901
48 -8M0004117 901
48 -8M0004118 901
48 -8M0004119 902
48 -8M0004120 902
48 -8M0004121 902
48 -8M0004122 902
48 -8M0004123 902
48 -8M0004124 902
48 -8M0004125 902
48 -8M0004126 902
48 -8M0004127 902
48 -8M0004128 902
48 -8M0004129 902
48 -8M0004130 902
48 -8M0004131 902
48 -8M0004132 902
48 -8M0004133 902
48 -8M0004134 902
48 -8M0004135 903
48 -8M0004136 903
48 -8M0004137 901
48 -8M0004138 901
48 -8M0004139 901
48 -8M0004140 901
48 -8M0004141 901
48 -8M0004142 901
48 -8M0004143 901
48 -8M0004144 901
48 -8M0004145 901
48 -8M0004146 901
48 -8M0004147 902
48 -8M0004148 902
48 -8M0004149 902
48 -8M0004150 902
48 -8M0004151 902
48 -8M0004152 902
48 -8M0004153 902
48 -8M0004154 902
48 -8M0004155 902
48 -8M0004156 902
48 -8M0004157 902
48 -8M0004158 902
48 -8M0004159 902
48 -8M0004160 902
48 -8M0004161 902
48 -8M0004162 902
48 -8M0004163 902
48 -8M0004164 902
48 -8M0004165 903
48 -8M0004166 903
48 -8M0004167 901
48 -8M0004168 901
48 -8M0004169 901
48 -8M0004170 901
48 -8M0004171 901
48 -8M0004172 901
48 -8M0004173 901
48 -8M0004174 901
48 -8M0004175 901
48 -8M0004176 901
48 -8M0004177 902
48 -8M0004178 902
48 -8M0004179 902
48 -8M0004180 902
48 -8M0004181 902
48 -8M0004182 902
48 -8M0004183 902
48 -8M0004184 902
48 -8M0004185 902
48 -8M0004186 902
48 -8M0004187 902
48 -8M0004188 902
48 -8M0004189 902
48 -8M0004190 902
48 -8M0004191 902
48 -8M0004192 902
48 -8M0004193 902
48 -8M0004194 902
48 -8M0004195 903
48 -8M0004196 903

48 -8M0004197 . . . 901
48 -8M0004198 . . . 901
48 -8M0004199 . . . 901
48 -8M0004200 . . . 901
48 -8M0004201 . . . 901
48 -8M0004202 . . . 901
48 -8M0004203 . . . 901
48 -8M0004204 . . . 901
48 -8M0004205 . . . 901
48 -8M0004206 . . . 901
48 -8M0004207 . . . 902
48 -8M0004208 . . . 902
48 -8M0004209 . . . 902
48 -8M0004210 . . . 902
48 -8M0004211 . . . 902
48 -8M0004212 . . . 902
48 -8M0004213 . . . 902
48 -8M0004214 . . . 902
48 -8M0004215 . . . 902
48 -8M0004216 . . . 902
48 -8M0004217 . . . 902
48 -8M0004218 . . . 902
48 -8M0004219 . . . 902
48 -8M0004220 . . . 902
48 -8M0004221 . . . 902
48 -8M0004222 . . . 902
48 -8M0004223 . . . 902
48 -8M0004224 . . . 902
48 -8M0004225 . . . 903
48 -8M0004226 . . . 903
48 -8M0004617 . . . 889
48 -8M0004618 . . . 889
48 -8M0004619 . . . 889
48 -8M0004620 . . . 889
48 -8M0004621 . . . 889
48 -8M0004622 . . . 889
48 -8M0004623 . . . 889
48 -8M0004624 . . . 889
48 -8M0004625 . . . 890
48 -8M0004626 . . . 890
48 -8M0004627 . . . 890
48 -8M0004628 . . . 890
48 -8M0004629 . . . 890
48 -8M0004630 . . . 890
48 -8M0004631 . . . 890
48 -8M0004632 . . . 890
48 -8M0004633 . . . 890
48 -8M0004634 . . . 890
48 -8M0004635 . . . 890
48 -8M0004636 . . . 890
48 -8M0004637 . . . 890
48 -8M0004638 . . . 890
48 -8M0004639 . . . 890
48 -8M0004640 . . . 890
48 -8M0004641 . . . 891
48 -8M0004642 . . . 891
48 -8M0004643 . . . 891
48 -8M0004644 . . . 891
48 -8M0004645 . . . 891
48 -8M0004646 . . . 891
48 -8M0004647 . . . 889
48 -8M0004648 . . . 889
48 -8M0004649 . . . 889
48 -8M0004650 . . . 889
48 -8M0004651 . . . 889
48 -8M0004652 . . . 889
48 -8M0004653 . . . 889
48 -8M0004654 . . . 889
48 -8M0004655 . . . 890
48 -8M0004656 . . . 890
48 -8M0004657 . . . 890
48 -8M0004658 . . . 890
48 -8M0004659 . . . 890
48 -8M0004660 . . . 890
48 -8M0004661 . . . 890
48 -8M0004662 . . . 890
48 -8M0004663 . . . 890
48 -8M0004664 . . . 890
48 -8M0004665 . . . 890
48 -8M0004666 . . . 890
48 -8M0004667 . . . 890
48 -8M0004668 . . . 890
48 -8M0004669 . . . 890
48 -8M0004670 . . . 890
48 -8M0004671 . . . 891
48 -8M0004672 . . . 891
48 -8M0004673 . . . 891
48 -8M0004674 . . . 891
48 -8M0004675 . . . 891
48 -8M0004676 . . . 891
48 -8M0004677 . . . 889
48 -8M0004678 . . . 889
48 -8M0004679 . . . 889
48 -8M0004680 . . . 889
48 -8M0004681 . . . 889
48 -8M0004682 . . . 889
48 -8M0004683 . . . 889
48 -8M0004684 . . . 889
48 -8M0004685 . . . 890
48 -8M0004686 . . . 890
48 -8M0004687 . . . 890
48 -8M0004688 . . . 890
48 -8M0004689 . . . 890
48 -8M0004690 . . . 890
48 -8M0004691 . . . 890
48 -8M0004692 . . . 890
48 -8M0004693 . . . 890
48 -8M0004694 . . . 890
48 -8M0004695 . . . 890
48 -8M0004696 . . . 890

48 -8M0004697 . . . 890
48 -8M0004698 . . . 890
48 -8M0004701 . . . 890, 891
48 -8M0004702 . . . 890, 891
48 -8M0004703 . . . 891
48 -8M0004704 . . . 891
48 -8M0004705 . . . 891
48 -8M0004706 . . . 891
48 -8M0004707 . . . 889
48 -8M0004708 . . . 889
48 -8M0004709 . . . 889
48 -8M0004710 . . . 889
48 -8M0004711 . . . 889
48 -8M0004712 . . . 889
48 -8M0004713 . . . 889
48 -8M0004714 . . . 889
48 -8M0004715 . . . 890
48 -8M0004716 . . . 890
48 -8M0004717 . . . 890
48 -8M0004718 . . . 890
48 -8M0004719 . . . 890
48 -8M0004720 . . . 890
48 -8M0004721 . . . 890
48 -8M0004722 . . . 890
48 -8M0004723 . . . 890
48 -8M0004724 . . . 890
48 -8M0004725 . . . 890
48 -8M0004726 . . . 890
48 -8M0004727 . . . 890
48 -8M0004728 . . . 890
48 -8M0004731 . . . 890, 891
48 -8M0004732 . . . 890, 891
48 -8M0004733 . . . 891
48 -8M0004734 . . . 891
48 -8M0004735 . . . 891
48 -8M0004736 . . . 891
48 -8M0004737 . . . 889
48 -8M0004738 . . . 889
48 -8M0004739 . . . 889
48 -8M0004740 . . . 889
48 -8M0004741 . . . 889
48 -8M0004742 . . . 889
48 -8M0004743 . . . 890
48 -8M0004744 . . . 890
48 -8M0004745 . . . 890
48 -8M0004746 . . . 890
48 -8M0004747 . . . 890
48 -8M0004748 . . . 890
48 -8M0004749 . . . 890
48 -8M0004750 . . . 890
48 -8M0004751 . . . 890
48 -8M0004752 . . . 890
48 -8M0004753 . . . 890
48 -8M0004754 . . . 890
48 -8M0004755 . . . 890
48 -8M0004756 . . . 890
48 -8M0004757 . . . 890
48 -8M0004758 . . . 890
48 -8M0004761 . . . 890, 891
48 -8M0004762 . . . 890, 891
48 -8M0004763 . . . 891
48 -8M0004764 . . . 891
48 -8M0004765 . . . 891
48 -8M0004766 . . . 891
48 -8M0004767 . . . 889
48 -8M0004768 . . . 889
48 -8M0004769 . . . 889
48 -8M0004770 . . . 889
48 -8M0004771 . . . 889
48 -8M0004772 . . . 889
48 -8M0004773 . . . 890
48 -8M0004774 . . . 890
48 -8M0004775 . . . 890
48 -8M0004776 . . . 890
48 -8M0004777 . . . 890
48 -8M0004778 . . . 890
48 -8M0004779 . . . 890
48 -8M0004780 . . . 890
48 -8M0004781 . . . 890
48 -8M0004782 . . . 890
48 -8M0004783 . . . 890
48 -8M0004784 . . . 890
48 -8M0004785 . . . 890
48 -8M0004786 . . . 890
48 -8M0004787 . . . 890
48 -8M0004788 . . . 890
48 -8M0004791 . . . 890, 891
48 -8M0004792 . . . 890, 891
48 -8M0004793 . . . 891
48 -8M0004794 . . . 891
48 -8M0004795 . . . 891
48 -8M0004796 . . . 891
48 -8M0004797 . . . 889
48 -8M0004798 . . . 889
48 -8M0004799 . . . 889
48 -8M0004800 . . . 889
48 -8M0004801 . . . 889
48 -8M0004802 . . . 889
48 -8M0004803 . . . 890
48 -8M0004804 . . . 890
48 -8M0004805 . . . 890
48 -8M0004806 . . . 890
48 -8M0004807 . . . 890
48 -8M0004808 . . . 890
48 -8M0004809 . . . 890
48 -8M0004810 . . . 890
48 -8M0004811 . . . 890
48 -8M0004812 . . . 890
48 -8M0004813 . . . 890
48 -8M0004814 . . . 890

48 -8M0004815 . . . 890
48 -8M0004816 . . . 890
48 -8M0004817 . . . 890
48 -8M0004818 . . . 890
48 -8M0004821 . . . 890, 891
48 -8M0004822 . . . 890, 891
48 -8M0004823 . . . 891
48 -8M0004824 . . . 891
48 -8M0004825 . . . 891
48 -8M0004826 . . . 891
48 -8M0004827 . . . 889
48 -8M0004828 . . . 889
48 -8M0004829 . . . 889
48 -8M0004830 . . . 889
48 -8M0004831 . . . 889
48 -8M0004832 . . . 889
48 -8M0004833 . . . 890
48 -8M0004834 . . . 890
48 -8M0004835 . . . 890
48 -8M0004836 . . . 890
48 -8M0004837 . . . 890
48 -8M0004838 . . . 890
48 -8M0004839 . . . 890
48 -8M0004840 . . . 890
48 -8M0004841 . . . 890
48 -8M0004842 . . . 890
48 -8M0004843 . . . 890
48 -8M0004844 . . . 890
48 -8M0004845 . . . 890
48 -8M0004846 . . . 890
48 -8M0004847 . . . 890
48 -8M0004848 . . . 890
48 -8M0004849 . . . 890
48 -8M0004850 . . . 890
48 -8M0004851 . . . 891
48 -8M0004852 . . . 891
48 -8M0004853 . . . 891
48 -8M0004854 . . . 891
48 -8M0004855 . . . 891
48 -8M0004856 . . . 891
48 -8M0004857 . . . 889
48 -8M0004858 . . . 889
48 -8M0004859 . . . 889
48 -8M0004860 . . . 889
48 -8M0004861 . . . 889
48 -8M0004862 . . . 889
48 -8M0004863 . . . 890
48 -8M0004864 . . . 890
48 -8M0004865 . . . 890
48 -8M0004866 . . . 890
48 -8M0004867 . . . 890
48 -8M0004868 . . . 890
48 -8M0004869 . . . 890
48 -8M0004870 . . . 890
48 -8M0004871 . . . 890
48 -8M0004872 . . . 890
48 -8M0004873 . . . 890
48 -8M0004874 . . . 890
48 -8M0004875 . . . 890
48 -8M0004876 . . . 890
48 -8M0004877 . . . 890
48 -8M0004878 . . . 890
48 -8M0004879 . . . 891
48 -8M0004880 . . . 891
48 -8M0004881 . . . 891
48 -8M0004882 . . . 891
48 -8M0004883 . . . 891
48 -8M0004884 . . . 891
48 -8M0004885 . . . 891
48 -8M0004886 . . . 891
48 -8M0004887 . . . 889
48 -8M0004888 . . . 889
48 -8M0004889 . . . 889
48 -8M0004890 . . . 889
48 -8M0004891 . . . 889
48 -8M0004892 . . . 889
48 -8M0004893 . . . 890
48 -8M0004894 . . . 890
48 -8M0004895 . . . 890
48 -8M0004896 . . . 890
48 -8M0004897 . . . 890
48 -8M0004898 . . . 890
48 -8M0004899 . . . 890
48 -8M0004900 . . . 890
48 -8M0004901 . . . 890
48 -8M0004902 . . . 890
48 -8M0004903 . . . 890
48 -8M0004904 . . . 890
48 -8M0004905 . . . 890
48 -8M0004906 . . . 890
48 -8M0004907 . . . 890
48 -8M0004908 . . . 890
48 -8M0004909 . . . 891
48 -8M0004910 . . . 891
48 -8M0004911 . . . 891
48 -8M0004912 . . . 891
48 -8M0004913 . . . 891
48 -8M0004914 . . . 891
48 -8M0004915 . . . 891
48 -8M0004916 . . . 891
48 -8M0004917 . . . 889
48 -8M0004918 . . . 889
48 -8M0004919 . . . 889
48 -8M0004920 . . . 889
48 -8M0004921 . . . 889
48 -8M0004922 . . . 889
48 -8M0004923 . . . 890
48 -8M0004924 . . . 890
48 -8M0004925 . . . 890
48 -8M0004926 . . . 890

48 -8M0004927 . . . 890
48 -8M0004928 . . . 890
48 -8M0004929 . . . 890
48 -8M0004930 . . . 890
48 -8M0004931 . . . 890
48 -8M0004932 . . . 890
48 -8M0004933 . . . 890
48 -8M0004934 . . . 890
48 -8M0004935 . . . 890
48 -8M0004936 . . . 890
48 -8M0004937 . . . 890
48 -8M0004938 . . . 890
48 -8M0004939 . . . 891
48 -8M0004940 . . . 891
48 -8M0004941 . . . 891
48 -8M0004942 . . . 891
48 -8M0004943 . . . 891
48 -8M0004944 . . . 891
48 -8M0004945 . . . 891
48 -8M0004946 . . . 891
48 -8M0004947 . . . 889
48 -8M0004948 . . . 889
48 -8M0004949 . . . 889
48 -8M0004950 . . . 889
48 -8M0004951 . . . 889
48 -8M0004952 . . . 889
48 -8M0004953 . . . 890
48 -8M0004954 . . . 890
48 -8M0004955 . . . 890
48 -8M0004956 . . . 890
48 -8M0004957 . . . 890
48 -8M0004958 . . . 890
48 -8M0004959 . . . 890
48 -8M0004960 . . . 890
48 -8M0004961 . . . 890
48 -8M0004962 . . . 890
48 -8M0004963 . . . 890
48 -8M0004964 . . . 890
48 -8M0004965 . . . 890
48 -8M0004966 . . . 890
48 -8M0004967 . . . 890
48 -8M0004968 . . . 890
48 -8M0004971 . . . 891
48 -8M0004972 . . . 891
48 -8M0004973 . . . 891
48 -8M0004974 . . . 891
48 -8M0004975 . . . 891
48 -8M0004976 . . . 891
48 -8M0004977 . . . 889
48 -8M0004978 . . . 889
48 -8M0004979 . . . 889
48 -8M0004980 . . . 889
48 -8M0004981 . . . 889
48 -8M0004982 . . . 889
48 -8M0004983 . . . 890
48 -8M0004984 . . . 890
48 -8M0004985 . . . 890
48 -8M0004986 . . . 890
48 -8M0004987 . . . 890
48 -8M0004988 . . . 890
48 -8M0004989 . . . 890
48 -8M0004990 . . . 890
48 -8M0004991 . . . 890
48 -8M0004992 . . . 890
48 -8M0004993 . . . 890
48 -8M0004994 . . . 890
48 -8M0004995 . . . 890
48 -8M0004996 . . . 890
48 -8M0004997 . . . 890
48 -8M0004998 . . . 890
48 -8M0004999 . . . 891
48 -8M0005000 . . . 891
48 -8M0005001 . . . 891
48 -8M0005002 . . . 891
48 -8M0005003 . . . 891
48 -8M0005004 . . . 891
48 -8M0005005 . . . 891
48 -8M0005006 . . . 891
48 -8M0005007 . . . 903
48 -8M0005008 . . . 903
48 -8M0005009 . . . 903
48 -8M0005010 . . . 903
48 -8M0005011 . . . 903
48 -8M0005012 . . . 903
48 -8M0005013 . . . 903
48 -8M0005014 . . . 903
48 -8M0005015 . . . 903
48 -8M0005016 . . . 903
48 -8M0005017 . . . 903
48 -8M0005018 . . . 903
48 -8M0005019 . . . 903
48 -8M0005020 . . . 903
48 -8M0005021 . . . 904
48 -8M0005022 . . . 904
48 -8M0005023 . . . 904
48 -8M0005024 . . . 904
48 -8M0005025 . . . 904
48 -8M0005026 . . . 904
48 -8M0005027 . . . 904
48 -8M0005028 . . . 904
48 -8M0005029 . . . 904
48 -8M0005030 . . . 904
48 -8M0005031 . . . 904
48 -8M0005032 . . . 904
48 -8M0005033 . . . 904
48 -8M0005034 . . . 904
48 -8M0005035 . . . 904
48 -8M0005036 . . . 904
48 -8M0005037 . . . 903
48 -8M0005038 . . . 903

48 -8M0005039 . . . 903
48 -8M0005040 . . . 903
48 -8M0005041 . . . 903
48 -8M0005042 . . . 903
48 -8M0005043 . . . 903
48 -8M0005044 . . . 903
48 -8M0005045 . . . 903
48 -8M0005046 . . . 903
48 -8M0005047 . . . 903
48 -8M0005048 . . . 903
48 -8M0005049 . . . 903
48 -8M0005050 . . . 903
48 -8M0005051 . . . 904
48 -8M0005052 . . . 904
48 -8M0005053 . . . 904
48 -8M0005054 . . . 904
48 -8M0005055 . . . 904
48 -8M0005056 . . . 904
48 -8M0005057 . . . 904
48 -8M0005058 . . . 904
48 -8M0005059 . . . 904
48 -8M0005060 . . . 904
48 -8M0005061 . . . 904
48 -8M0005062 . . . 904
48 -8M0005063 . . . 904
48 -8M0005064 . . . 904
48 -8M0005065 . . . 904
48 -8M0005066 . . . 904
48 -8M0005067 . . . 903
48 -8M0005068 . . . 903
48 -8M0005069 . . . 903
48 -8M0005070 . . . 903
48 -8M0005071 . . . 903
48 -8M0005072 . . . 903
48 -8M0005073 . . . 903
48 -8M0005074 . . . 903
48 -8M0005075 . . . 903
48 -8M0005076 . . . 903
48 -8M0005077 . . . 903
48 -8M0005078 . . . 903
48 -8M0005079 . . . 903
48 -8M0005080 . . . 903
48 -8M0005081 . . . 904
48 -8M0005082 . . . 904
48 -8M0005083 . . . 904
48 -8M0005084 . . . 904
48 -8M0005085 . . . 904
48 -8M0005086 . . . 904
48 -8M0005087 . . . 904
48 -8M0005088 . . . 904
48 -8M0005089 . . . 904
48 -8M0005090 . . . 904
48 -8M0005091 . . . 904
48 -8M0005092 . . . 904
48 -8M0005093 . . . 904
48 -8M0005094 . . . 904
48 -8M0005095 . . . 904
48 -8M0005096 . . . 904
48 -8M0005097 . . . 903
48 -8M0005098 . . . 903
48 -8M0005099 . . . 903
48 -8M0005100 . . . 903
48 -8M0005101 . . . 903
48 -8M0005102 . . . 903
48 -8M0005103 . . . 903
48 -8M0005104 . . . 903
48 -8M0005105 . . . 903
48 -8M0005106 . . . 903
48 -8M0005107 . . . 903
48 -8M0005108 . . . 903
48 -8M0005109 . . . 903
48 -8M0005110 . . . 903
48 -8M0005111 . . . 904
48 -8M0005112 . . . 904
48 -8M0005113 . . . 904
48 -8M0005114 . . . 904
48 -8M0005115 . . . 904
48 -8M0005116 . . . 904
48 -8M0005117 . . . 904
48 -8M0005118 . . . 904
48 -8M0005119 . . . 904
48 -8M0005120 . . . 904
48 -8M0005121 . . . 904
48 -8M0005122 . . . 904
48 -8M0005123 . . . 904
48 -8M0005124 . . . 904
48 -8M0005125 . . . 904
48 -8M0005126 . . . 904
48 -8M0005127 . . . 903
48 -8M0005128 . . . 903
48 -8M0005129 . . . 903
48 -8M0005130 . . . 903
48 -8M0005131 . . . 903
48 -8M0005132 . . . 903
48 -8M0005133 . . . 903
48 -8M0005134 . . . 903
48 -8M0005135 . . . 903
48 -8M0005136 . . . 903
48 -8M0005137 . . . 903
48 -8M0005138 . . . 903
48 -8M0005139 . . . 903
48 -8M0005140 . . . 903
48 -8M0005141 . . . 904
48 -8M0005142 . . . 904
48 -8M0005143 . . . 904
48 -8M0005144 . . . 904
48 -8M0005145 . . . 904
48 -8M0005146 . . . 904
48 -8M0005147 . . . 904
48 -8M0005148 . . . 904

48 -8M0005149 904
48 -8M0005150 904
48 -8M0005151 904
48 -8M0005152 904
48 -8M0005153 904
48 -8M0005154 904
48 -8M0005155 904
48 -8M0005156 904
48 -8M0005157 903
48 -8M0005158 903
48 -8M0005159 903
48 -8M0005160 903
48 -8M0005161 903
48 -8M0005162 903
48 -8M0005163 903
48 -8M0005164 903
48 -8M0005165 903
48 -8M0005166 903
48 -8M0005167 903
48 -8M0005168 903
48 -8M0005169 903
48 -8M0005170 903
48 -8M0005171 904
48 -8M0005172 904
48 -8M0005173 904
48 -8M0005174 904
48 -8M0005175 904
48 -8M0005176 904
48 -8M0005177 904
48 -8M0005178 904
48 -8M0005179 904
48 -8M0005180 904
48 -8M0005181 904
48 -8M0005182 904
48 -8M0005183 904
48 -8M0005184 904
48 -8M0005185 904
48 -8M0005186 904
48 -8M0005187 903
48 -8M0005188 903
48 -8M0005189 903
48 -8M0005190 903
48 -8M0005191 903
48 -8M0005192 903
48 -8M0005193 903
48 -8M0005194 903
48 -8M0005195 903
48 -8M0005196 903
48 -8M0005197 903
48 -8M0005198 903
48 -8M0005199 903
48 -8M0005200 903
48 -8M0005201 904
48 -8M0005202 904
48 -8M0005203 904
48 -8M0005204 904
48 -8M0005205 904
48 -8M0005206 904
48 -8M0005207 904
48 -8M0005208 904
48 -8M0005209 904
48 -8M0005210 904
48 -8M0005211 904
48 -8M0005212 904
48 -8M0005213 904
48 -8M0005214 904
48 -8M0005215 904
48 -8M0005216 904
48 -8M0005217 903
48 -8M0005218 903
48 -8M0005219 903
48 -8M0005220 903
48 -8M0005221 903
48 -8M0005222 903
48 -8M0005223 903
48 -8M0005224 903
48 -8M0005225 903
48 -8M0005226 903
48 -8M0005227 903
48 -8M0005228 903
48 -8M0005229 903
48 -8M0005230 903
48 -8M0005231 904
48 -8M0005232 904
48 -8M0005233 904
48 -8M0005234 904
48 -8M0005235 904
48 -8M0005236 904
48 -8M0005237 904
48 -8M0005238 904
48 -8M0005239 904
48 -8M0005240 904
48 -8M0005241 904
48 -8M0005242 904
48 -8M0005243 904
48 -8M0005244 904
48 -8M0005245 904
48 -8M0005246 904
48 -8M0005247 903
48 -8M0005248 903
48 -8M0005249 903
48 -8M0005250 903
48 -8M0005251 903
48 -8M0005252 903
48 -8M0005253 903
48 -8M0005254 903
48 -8M0005255 903
48 -8M0005256 903
48 -8M0005257 903
48 -8M0005258 903

48 -8M0005259 . . . 903
48 -8M0005260 . . . 903
48 -8M0005261 . . . 904
48 -8M0005262 . . . 904
48 -8M0005263 . . . 904
48 -8M0005264 . . . 904
48 -8M0005265 . . . 904
48 -8M0005266 . . . 904
48 -8M0005267 . . . 904
48 -8M0005268 . . . 904
48 -8M0005269 . . . 904
48 -8M0005270 . . . 904
48 -8M0005271 . . . 904
48 -8M0005272 . . . 904
48 -8M0005273 . . . 904
48 -8M0005274 . . . 904
48 -8M0005275 . . . 904
48 -8M0005276 . . . 904
48 -8M0005277 . . . 903
48 -8M0005278 . . . 903
48 -8M0005279 . . . 903
48 -8M0005280 . . . 903
48 -8M0005281 . . . 903
48 -8M0005282 . . . 903
48 -8M0005283 . . . 903
48 -8M0005284 . . . 903
48 -8M0005285 . . . 903
48 -8M0005286 . . . 903
48 -8M0005287 . . . 903
48 -8M0005288 . . . 903
48 -8M0005289 . . . 903
48 -8M0005290 . . . 903
48 -8M0005291 . . . 904
48 -8M0005292 . . . 904
48 -8M0005293 . . . 904
48 -8M0005294 . . . 904
48 -8M0005295 . . . 904
48 -8M0005296 . . . 904
48 -8M0005297 . . . 904
48 -8M0005298 . . . 904
48 -8M0005299 . . . 904
48 -8M0005300 . . . 904
48 -8M0005301 . . . 904
48 -8M0005302 . . . 904
48 -8M0005303 . . . 904
48 -8M0005304 . . . 904
48 -8M0005305 . . . 904
48 -8M0005306 . . . 904
48 -8M0005307 . . . 903
48 -8M0005308 . . . 903
48 -8M0005309 . . . 903
48 -8M0005310 . . . 903
48 -8M0005311 . . . 903
48 -8M0005312 . . . 903
48 -8M0005313 . . . 903
48 -8M0005314 . . . 903
48 -8M0005315 . . . 903
48 -8M0005316 . . . 903
48 -8M0005317 . . . 903
48 -8M0005318 . . . 903
48 -8M0005319 . . . 903
48 -8M0005320 . . . 903
48 -8M0005321 . . . 904
48 -8M0005322 . . . 904
48 -8M0005323 . . . 904
48 -8M0005324 . . . 904
48 -8M0005325 . . . 904
48 -8M0005326 . . . 904
48 -8M0005327 . . . 904
48 -8M0005328 . . . 904
48 -8M0005329 . . . 904
48 -8M0005330 . . . 904
48 -8M0005331 . . . 904
48 -8M0005332 . . . 904
48 -8M0005333 . . . 904
48 -8M0005334 . . . 904
48 -8M0005335 . . . 904
48 -8M0005336 . . . 904
48 -8M0005337 . . . 903
48 -8M0005338 . . . 903
48 -8M0005339 . . . 903
48 -8M0005340 . . . 903
48 -8M0005341 . . . 903
48 -8M0005342 . . . 903
48 -8M0005343 . . . 903
48 -8M0005344 . . . 903
48 -8M0005345 . . . 903
48 -8M0005346 . . . 903
48 -8M0005347 . . . 903
48 -8M0005348 . . . 903
48 -8M0005349 . . . 904
48 -8M0005350 . . . 904
48 -8M0005351 . . . 904
48 -8M0005352 . . . 904
48 -8M0005353 . . . 904
48 -8M0005354 . . . 904
48 -8M0005355 . . . 904
48 -8M0005356 . . . 904
48 -8M0005357 . . . 904
48 -8M0005358 . . . 904
48 -8M0005359 . . . 904
48 -8M0005360 . . . 904
48 -8M0005361 . . . 904
48 -8M0005362 . . . 904
48 -8M0005363 . . . 904
48 -8M0005364 . . . 904
48 -8M0005365 . . . 904
48 -8M0005366 . . . 904
48 -8M0005367 . . . 903
48 -8M0005368 . . . 903

48 -8M0005369 . . . 903
48 -8M0005370 . . . 903
48 -8M0005371 . . . 903
48 -8M0005372 . . . 903
48 -8M0005373 . . . 903
48 -8M0005374 . . . 903
48 -8M0005375 . . . 903
48 -8M0005376 . . . 903
48 -8M0005377 . . . 903
48 -8M0005378 . . . 903
48 -8M0005379 . . . 904
48 -8M0005380 . . . 904
48 -8M0005381 . . . 904
48 -8M0005382 . . . 904
48 -8M0005383 . . . 904
48 -8M0005384 . . . 904
48 -8M0005385 . . . 904
48 -8M0005386 . . . 904
48 -8M0005387 . . . 904
48 -8M0005388 . . . 904
48 -8M0005389 . . . 904
48 -8M0005390 . . . 904
48 -8M0005391 . . . 904
48 -8M0005392 . . . 904
48 -8M0005393 . . . 904
48 -8M0005394 . . . 904
48 -8M0005395 . . . 904
48 -8M0005396 . . . 904
48 -8M0006658 . . . 874, 879
48 -8M0006660 . . . 874, 879
48 -8M0006662 . . . 874, 879
48 -8M0006668 . . . 874, 879
48 -8M0006670 . . . 874, 879
48 -8M0006672 . . . 874, 879
8M0011212 . . . 351, 353, 356, 359, 362, 522
8M0011213 . . . 342, 345, 351, 353, 356, 359, 362, 364, 368, 372, 375, 521
8M0011214 . . . 388, 521
8M0011215 . . . 388, 522
8M0012083 . . . 108, 235
48 -8M0013507 . . . 892
48 -8M0013508 . . . 892
48 -8M0013509 . . . 892
48 -8M0013510 . . . 892
48 -8M0013511 . . . 892
48 -8M0013512 . . . 892
48 -8M0013513 . . . 893
48 -8M0013514 . . . 893
48 -8M0013515 . . . 893
48 -8M0013516 . . . 893
48 -8M0013517 . . . 893
48 -8M0013518 . . . 893
48 -8M0013519 . . . 893
48 -8M0013520 . . . 893
48 -8M0013521 . . . 893
48 -8M0013522 . . . 893
48 -8M0013523 . . . 893
48 -8M0013524 . . . 893
48 -8M0013525 . . . 893
48 -8M0013526 . . . 893
48 -8M0013527 . . . 893
48 -8M0013528 . . . 893
48 -8M0013537 . . . 892
48 -8M0013538 . . . 892
48 -8M0013539 . . . 892
48 -8M0013540 . . . 892
48 -8M0013541 . . . 892
48 -8M0013542 . . . 892
48 -8M0013543 . . . 893
48 -8M0013544 . . . 893
48 -8M0013545 . . . 893
48 -8M0013546 . . . 893
48 -8M0013547 . . . 893
48 -8M0013548 . . . 893
48 -8M0013549 . . . 893
48 -8M0013550 . . . 893
48 -8M0013551 . . . 893
48 -8M0013552 . . . 893
48 -8M0013553 . . . 893
48 -8M0013554 . . . 893
48 -8M0013555 . . . 893
48 -8M0013556 . . . 893
48 -8M0013557 . . . 893
48 -8M0013558 . . . 893
48 -8M0013567 . . . 892
48 -8M0013568 . . . 892
48 -8M0013569 . . . 892
48 -8M0013570 . . . 892
48 -8M0013571 . . . 892
48 -8M0013572 . . . 892
48 -8M0013573 . . . 893
48 -8M0013574 . . . 893
48 -8M0013575 . . . 893
48 -8M0013576 . . . 893
48 -8M0013577 . . . 893
48 -8M0013578 . . . 893
48 -8M0013579 . . . 893
48 -8M0013580 . . . 893
48 -8M0013581 . . . 893
48 -8M0013582 . . . 893
48 -8M0013583 . . . 893
48 -8M0013584 . . . 893
48 -8M0013585 . . . 893
48 -8M0013586 . . . 893
48 -8M0013587 . . . 893
48 -8M0013588 . . . 893
48 -8M0013597 . . . 892
48 -8M0013598 . . . 892
48 -8M0013599 . . . 892
48 -8M0013600 . . . 892

48 -8M0013601 . . . 892
48 -8M0013602 . . . 892
48 -8M0013603 . . . 893
48 -8M0013604 . . . 893
48 -8M0013605 . . . 893
48 -8M0013606 . . . 893
48 -8M0013607 . . . 893
48 -8M0013608 . . . 893
48 -8M0013609 . . . 893
48 -8M0013610 . . . 893
48 -8M0013611 . . . 893
48 -8M0013612 . . . 893
48 -8M0013613 . . . 893
48 -8M0013614 . . . 893
48 -8M0013615 . . . 893
48 -8M0013616 . . . 893
48 -8M0013617 . . . 893
48 -8M0013618 . . . 893
48 -8M0013627 . . . 892
48 -8M0013628 . . . 892
48 -8M0013629 . . . 892
48 -8M0013630 . . . 892
48 -8M0013631 . . . 892
48 -8M0013632 . . . 892
48 -8M0013633 . . . 893
48 -8M0013634 . . . 893
48 -8M0013635 . . . 893
48 -8M0013636 . . . 893
48 -8M0013637 . . . 893
48 -8M0013638 . . . 893
48 -8M0013639 . . . 893
48 -8M0013640 . . . 893
48 -8M0013641 . . . 893
48 -8M0013642 . . . 893
48 -8M0013643 . . . 893
48 -8M0013644 . . . 893
48 -8M0013645 . . . 893
48 -8M0013646 . . . 893
48 -8M0013647 . . . 893
48 -8M0013648 . . . 893
48 -8M0013657 . . . 892
48 -8M0013658 . . . 892
48 -8M0013659 . . . 892
48 -8M0013660 . . . 892
48 -8M0013661 . . . 892
48 -8M0013662 . . . 892
48 -8M0013663 . . . 893
48 -8M0013664 . . . 893
48 -8M0013665 . . . 893
48 -8M0013666 . . . 893
48 -8M0013667 . . . 893
48 -8M0013668 . . . 893
48 -8M0013669 . . . 893
48 -8M0013670 . . . 893
48 -8M0013671 . . . 893
48 -8M0013672 . . . 893
48 -8M0013673 . . . 893
48 -8M0013674 . . . 893
48 -8M0013675 . . . 893
48 -8M0013676 . . . 893
48 -8M0013677 . . . 893
48 -8M0013678 . . . 893
48 -8M0013687 . . . 892
48 -8M0013688 . . . 892
48 -8M0013689 . . . 892
48 -8M0013690 . . . 892
48 -8M0013691 . . . 892
48 -8M0013692 . . . 892
48 -8M0013693 . . . 893
48 -8M0013694 . . . 893
48 -8M0013695 . . . 893
48 -8M0013696 . . . 893
48 -8M0013697 . . . 893
48 -8M0013698 . . . 893
48 -8M0013699 . . . 893
48 -8M0013700 . . . 893
48 -8M0013701 . . . 893
48 -8M0013702 . . . 893
48 -8M0013703 . . . 893
48 -8M0013704 . . . 893
48 -8M0013705 . . . 893
48 -8M0013706 . . . 893
48 -8M0013707 . . . 893
48 -8M0013708 . . . 893
48 -8M0013717 . . . 892
48 -8M0013718 . . . 892
48 -8M0013719 . . . 892
48 -8M0013720 . . . 892
48 -8M0013721 . . . 892
48 -8M0013722 . . . 892
48 -8M0013723 . . . 893
48 -8M0013724 . . . 893
48 -8M0013725 . . . 893
48 -8M0013726 . . . 893
48 -8M0013727 . . . 893
48 -8M0013728 . . . 893
48 -8M0013729 . . . 893
48 -8M0013730 . . . 893
48 -8M0013731 . . . 893
48 -8M0013732 . . . 893
48 -8M0013733 . . . 893
48 -8M0013734 . . . 893
48 -8M0013735 . . . 893
48 -8M0013736 . . . 893
48 -8M0013737 . . . 893
48 -8M0013738 . . . 893
48 -8M0013747 . . . 892
48 -8M0013748 . . . 892
48 -8M0013749 . . . 892
48 -8M0013750 . . . 892

48 -8M0013751 . . . 892
48 -8M0013752 . . . 892
48 -8M0013753 . . . 893
48 -8M0013754 . . . 893
48 -8M0013755 . . . 893
48 -8M0013756 . . . 893
48 -8M0013757 . . . 893
48 -8M0013758 . . . 893
48 -8M0013759 . . . 893
48 -8M0013760 . . . 893
48 -8M0013761 . . . 893
48 -8M0013762 . . . 893
48 -8M0013763 . . . 893
48 -8M0013764 . . . 893
48 -8M0013765 . . . 893
48 -8M0013766 . . . 893
48 -8M0013767 . . . 893
48 -8M0013768 . . . 893
48 -8M0013777 . . . 892
48 -8M0013778 . . . 892
48 -8M0013779 . . . 892
48 -8M0013780 . . . 892
48 -8M0013781 . . . 892
48 -8M0013782 . . . 892
48 -8M0013783 . . . 893
48 -8M0013784 . . . 893
48 -8M0013785 . . . 893
48 -8M0013786 . . . 893
48 -8M0013787 . . . 893
48 -8M0013788 . . . 893
48 -8M0013789 . . . 893
48 -8M0013790 . . . 893
48 -8M0013791 . . . 893
48 -8M0013792 . . . 893
48 -8M0013793 . . . 893
48 -8M0013794 . . . 893
48 -8M0013795 . . . 893
48 -8M0013796 . . . 893
48 -8M0013797 . . . 893
48 -8M0013798 . . . 893
48 -8M0013807 . . . 892
48 -8M0013808 . . . 892
48 -8M0013809 . . . 892
48 -8M0013810 . . . 892
48 -8M0013811 . . . 892
48 -8M0013812 . . . 892
48 -8M0013813 . . . 893
48 -8M0013814 . . . 893
48 -8M0013815 . . . 893
48 -8M0013816 . . . 893
48 -8M0013817 . . . 893
48 -8M0013818 . . . 893
48 -8M0013819 . . . 893
48 -8M0013820 . . . 893
48 -8M0013821 . . . 893
48 -8M0013822 . . . 893
48 -8M0013823 . . . 893
48 -8M0013824 . . . 893
48 -8M0013825 . . . 893
48 -8M0013826 . . . 893
48 -8M0013827 . . . 893
48 -8M0013828 . . . 893
48 -8M0013837 . . . 892
48 -8M0013838 . . . 892
48 -8M0013839 . . . 892
48 -8M0013840 . . . 892
48 -8M0013841 . . . 892
48 -8M0013842 . . . 892
48 -8M0013843 . . . 893
48 -8M0013844 . . . 893
48 -8M0013845 . . . 893
48 -8M0013846 . . . 893
48 -8M0013847 . . . 893
48 -8M0013848 . . . 893
48 -8M0013849 . . . 893
48 -8M0013850 . . . 893
48 -8M0013851 . . . 893
48 -8M0013852 . . . 893
48 -8M0013853 . . . 893
48 -8M0013854 . . . 893
48 -8M0013855 . . . 893
48 -8M0013856 . . . 893
48 -8M0013857 . . . 893
48 -8M0013858 . . . 893
48 -8M0013867 . . . 892
48 -8M0013868 . . . 892
48 -8M0013869 . . . 892
48 -8M0013870 . . . 892
48 -8M0013871 . . . 892
48 -8M0013872 . . . 892
48 -8M0013873 . . . 893
48 -8M0013874 . . . 893
48 -8M0013875 . . . 893
48 -8M0013876 . . . 893
48 -8M0013877 . . . 893
48 -8M0013878 . . . 893
48 -8M0013879 . . . 893
48 -8M0013880 . . . 893
48 -8M0013881 . . . 893
48 -8M0013882 . . . 893
48 -8M0013883 . . . 893
48 -8M0013884 . . . 893
48 -8M0013885 . . . 893
48 -8M0013886 . . . 893
48 -8M0013887 . . . 893
48 -8M0013888 . . . 893
48 -8M0013897 . . . 905
48 -8M0013898 . . . 905
48 -8M0013899 . . . 905
48 -8M0013900 . . . 905

48 -8M0013901 . . . 905
48 -8M0013902 . . . 905
48 -8M0013903 . . . 905
48 -8M0013904 . . . 905
48 -8M0013905 . . . 905
48 -8M0013906 . . . 905
48 -8M0013907 . . . 905
48 -8M0013908 . . . 905
48 -8M0013909 . . . 905
48 -8M0013910 . . . 905
48 -8M0013911 . . . 906
48 -8M0013912 . . . 906
48 -8M0013913 . . . 906
48 -8M0013914 . . . 906
48 -8M0013915 . . . 906
48 -8M0013916 . . . 906
48 -8M0013917 . . . 906
48 -8M0013918 . . . 906
48 -8M0013927 . . . 905
48 -8M0013928 . . . 905
48 -8M0013929 . . . 905
48 -8M0013930 . . . 905
48 -8M0013931 . . . 905
48 -8M0013932 . . . 905
48 -8M0013933 . . . 905
48 -8M0013934 . . . 905
48 -8M0013935 . . . 905
48 -8M0013936 . . . 905
48 -8M0013937 . . . 905
48 -8M0013938 . . . 905
48 -8M0013939 . . . 905
48 -8M0013940 . . . 905
48 -8M0013941 . . . 906
48 -8M0013942 . . . 906
48 -8M0013943 . . . 906
48 -8M0013944 . . . 906
48 -8M0013945 . . . 906
48 -8M0013946 . . . 906
48 -8M0013947 . . . 906
48 -8M0013948 . . . 906
48 -8M0013957 . . . 905
48 -8M0013958 . . . 905
48 -8M0013959 . . . 905
48 -8M0013960 . . . 905
48 -8M0013961 . . . 905
48 -8M0013962 . . . 905
48 -8M0013963 . . . 905
48 -8M0013964 . . . 905
48 -8M0013965 . . . 905
48 -8M0013966 . . . 905
48 -8M0013967 . . . 905
48 -8M0013968 . . . 905
48 -8M0013969 . . . 905
48 -8M0013970 . . . 905
48 -8M0013971 . . . 906
48 -8M0013972 . . . 906
48 -8M0013973 . . . 906
48 -8M0013974 . . . 906
48 -8M0013975 . . . 906
48 -8M0013976 . . . 906
48 -8M0013977 . . . 906
48 -8M0013978 . . . 906
48 -8M0013987 . . . 905
48 -8M0013988 . . . 905
48 -8M0013989 . . . 905
48 -8M0013990 . . . 905
48 -8M0013991 . . . 905
48 -8M0013992 . . . 905
48 -8M0013993 . . . 905
48 -8M0013994 . . . 905
48 -8M0013995 . . . 905
48 -8M0013996 . . . 905
48 -8M0013997 . . . 905
48 -8M0013998 . . . 905
48 -8M0013999 . . . 905
48 -8M0014000 . . . 905
48 -8M0014001 . . . 906
48 -8M0014002 . . . 906
48 -8M0014003 . . . 906
48 -8M0014004 . . . 906
48 -8M0014005 . . . 906
48 -8M0014006 . . . 906
48 -8M0014007 . . . 906
48 -8M0014008 . . . 906
48 -8M0014017 . . . 905
48 -8M0014018 . . . 905
48 -8M0014019 . . . 905
48 -8M0014020 . . . 905
48 -8M0014021 . . . 905
48 -8M0014022 . . . 905
48 -8M0014023 . . . 905
48 -8M0014024 . . . 905
48 -8M0014025 . . . 905
48 -8M0014026 . . . 905
48 -8M0014027 . . . 905
48 -8M0014028 . . . 905
48 -8M0014029 . . . 905
48 -8M0014030 . . . 905
48 -8M0014031 . . . 906
48 -8M0014032 . . . 906
48 -8M0014033 . . . 906
48 -8M0014034 . . . 906
48 -8M0014035 . . . 906
48 -8M0014036 . . . 906
48 -8M0014037 . . . 906
48 -8M0014038 . . . 906
48 -8M0014047 . . . 905
48 -8M0014048 . . . 905
48 -8M0014049 . . . 905
48 -8M0014050 . . . 905

48 -8M0014051 . . . 905
48 -8M0014052 . . . 905
48 -8M0014053 . . . 905
48 -8M0014054 . . . 905
48 -8M0014055 . . . 905
48 -8M0014056 . . . 905
48 -8M0014057 . . . 905
48 -8M0014058 . . . 905
48 -8M0014059 . . . 905
48 -8M0014060 . . . 905
48 -8M0014061 . . . 906
48 -8M0014062 . . . 906
48 -8M0014063 . . . 906
48 -8M0014064 . . . 906
48 -8M0014065 . . . 906
48 -8M0014066 . . . 906
48 -8M0014067 . . . 906
48 -8M0014068 . . . 906
48 -8M0014077 . . . 905
48 -8M0014078 . . . 905
48 -8M0014079 . . . 905
48 -8M0014080 . . . 905
48 -8M0014081 . . . 905
48 -8M0014082 . . . 905
48 -8M0014083 . . . 905
48 -8M0014084 . . . 905
48 -8M0014085 . . . 905
48 -8M0014086 . . . 905
48 -8M0014087 . . . 905
48 -8M0014088 . . . 905
48 -8M0014089 . . . 905
48 -8M0014090 . . . 905
48 -8M0014091 . . . 906
48 -8M0014092 . . . 906
48 -8M0014093 . . . 906
48 -8M0014094 . . . 906
48 -8M0014095 . . . 906
48 -8M0014096 . . . 906
48 -8M0014097 . . . 906
48 -8M0014098 . . . 906
48 -8M0014107 . . . 905
48 -8M0014108 . . . 905
48 -8M0014109 . . . 905
48 -8M0014110 . . . 905
48 -8M0014111 . . . 905
48 -8M0014112 . . . 905
48 -8M0014113 . . . 905
48 -8M0014114 . . . 905
48 -8M0014115 . . . 905
48 -8M0014116 . . . 905
48 -8M0014117 . . . 905
48 -8M0014118 . . . 905
48 -8M0014119 . . . 905
48 -8M0014120 . . . 905
48 -8M0014121 . . . 906
48 -8M0014122 . . . 906
48 -8M0014123 . . . 906
48 -8M0014124 . . . 906
48 -8M0014125 . . . 906
48 -8M0014126 . . . 906
48 -8M0014127 . . . 906
48 -8M0014128 . . . 906
48 -8M0014137 . . . 905
48 -8M0014138 . . . 905
48 -8M0014139 . . . 905
48 -8M0014140 . . . 905
48 -8M0014141 . . . 905
48 -8M0014142 . . . 905
48 -8M0014143 . . . 905
48 -8M0014144 . . . 905
48 -8M0014145 . . . 905
48 -8M0014146 . . . 905
48 -8M0014147 . . . 905
48 -8M0014148 . . . 905
48 -8M0014149 . . . 905
48 -8M0014150 . . . 905
48 -8M0014151 . . . 906
48 -8M0014152 . . . 906
48 -8M0014153 . . . 906
48 -8M0014154 . . . 906
48 -8M0014155 . . . 906
48 -8M0014156 . . . 906
48 -8M0014157 . . . 906
48 -8M0014158 . . . 906
48 -8M0014167 . . . 905
48 -8M0014168 . . . 905
48 -8M0014169 . . . 905
48 -8M0014170 . . . 905
48 -8M0014171 . . . 905
48 -8M0014172 . . . 905
48 -8M0014173 . . . 905
48 -8M0014174 . . . 905
48 -8M0014175 . . . 905
48 -8M0014176 . . . 905
48 -8M0014177 . . . 905
48 -8M0014178 . . . 905
48 -8M0014179 . . . 905
48 -8M0014180 . . . 896, 905
48 -8M0014181 . . . 906
48 -8M0014182 . . . 906
48 -8M0014183 . . . 906
48 -8M0014184 . . . 906
48 -8M0014185 . . . 906
48 -8M0014186 . . . 906
48 -8M0014187 . . . 906
48 -8M0014188 . . . 906
48 -8M0014197 . . . 905
48 -8M0014198 . . . 905
48 -8M0014199 . . . 905
48 -8M0014200 . . . 905

48 -8M0014201 . . . 905
48 -8M0014202 . . . 905
48 -8M0014203 . . . 905
48 -8M0014204 . . . 905
48 -8M0014205 . . . 905
48 -8M0014206 . . . 905
48 -8M0014207 . . . 905
48 -8M0014208 . . . 905
48 -8M0014209 . . . 905
48 -8M0014210 . . . 905
48 -8M0014211 . . . 906
48 -8M0014212 . . . 906
48 -8M0014213 . . . 906
48 -8M0014214 . . . 906
48 -8M0014215 . . . 906
48 -8M0014216 . . . 906
48 -8M0014217 . . . 906
48 -8M0014218 . . . 906
48 -8M0014227 . . . 905
48 -8M0014228 . . . 905
48 -8M0014229 . . . 905
48 -8M0014230 . . . 905
48 -8M0014231 . . . 905
48 -8M0014232 . . . 905
48 -8M0014233 . . . 905
48 -8M0014234 . . . 905
48 -8M0014235 . . . 905
48 -8M0014236 . . . 905
48 -8M0014237 . . . 905
48 -8M0014238 . . . 905
48 -8M0014239 . . . 905
48 -8M0014240 . . . 905
48 -8M0014241 . . . 906
48 -8M0014242 . . . 906
48 -8M0014243 . . . 906
48 -8M0014244 . . . 906
48 -8M0014245 . . . 906
48 -8M0014246 . . . 906
48 -8M0014247 . . . 906
48 -8M0014248 . . . 906
48 -8M0014257 . . . 905
48 -8M0014258 . . . 905
48 -8M0014259 . . . 905
48 -8M0014260 . . . 905
48 -8M0014261 . . . 905
48 -8M0014262 . . . 905
48 -8M0014263 . . . 905
48 -8M0014264 . . . 905
48 -8M0014265 . . . 905
48 -8M0014266 . . . 905
48 -8M0014267 . . . 905
48 -8M0014268 . . . 905
48 -8M0014269 . . . 905
48 -8M0014270 . . . 896, 905
48 -8M0014271 . . . 906
48 -8M0014272 . . . 906
48 -8M0014273 . . . 906
48 -8M0014274 . . . 906
48 -8M0014275 . . . 906
48 -8M0014276 . . . 906
48 -8M0014277 . . . 906
48 -8M0014278 . . . 906
48 -8M0014677 . . . 894
48 -8M0014678 . . . 894
48 -8M0014679 . . . 894
48 -8M0014680 . . . 894
48 -8M0014681 . . . 894
48 -8M0014682 . . . 894
48 -8M0014683 . . . 894
48 -8M0014684 . . . 894
48 -8M0014685 . . . 894
48 -8M0014686 . . . 894
48 -8M0014687 . . . 894
48 -8M0014688 . . . 894
48 -8M0014689 . . . 894
48 -8M0014690 . . . 894
48 -8M0014691 . . . 894
48 -8M0014692 . . . 894
48 -8M0014693 . . . 895
48 -8M0014694 . . . 895
48 -8M0014695 . . . 895
48 -8M0014696 . . . 895
48 -8M0014697 . . . 895
48 -8M0014698 . . . 895
48 -8M0014707 . . . 894
48 -8M0014708 . . . 894
48 -8M0014709 . . . 894
48 -8M0014710 . . . 894
48 -8M0014711 . . . 894
48 -8M0014712 . . . 894
48 -8M0014713 . . . 894
48 -8M0014714 . . . 894
48 -8M0014715 . . . 894
48 -8M0014716 . . . 894
48 -8M0014717 . . . 894
48 -8M0014718 . . . 894
48 -8M0014719 . . . 894
48 -8M0014720 . . . 894
48 -8M0014721 . . . 894
48 -8M0014722 . . . 894
48 -8M0014723 . . . 895
48 -8M0014724 . . . 895
48 -8M0014725 . . . 895
48 -8M0014726 . . . 895
48 -8M0014727 . . . 895
48 -8M0014728 . . . 895
48 -8M0014737 . . . 894
48 -8M0014738 . . . 894
48 -8M0014739 . . . 894
48 -8M0014740 . . . 894

48 -8M0014741 . . . 894
48 -8M0014742 . . . 894
48 -8M0014743 . . . 894
48 -8M0014744 . . . 894
48 -8M0014745 . . . 894
48 -8M0014746 . . . 894
48 -8M0014747 . . . 894
48 -8M0014748 . . . 894
48 -8M0014749 . . . 894
48 -8M0014750 . . . 894
48 -8M0014751 . . . 894
48 -8M0014752 . . . 894
48 -8M0014753 . . . 895
48 -8M0014754 . . . 895
48 -8M0014755 . . . 895
48 -8M0014756 . . . 895
48 -8M0014757 . . . 895
48 -8M0014758 . . . 895
48 -8M0014767 . . . 894
48 -8M0014768 . . . 894
48 -8M0014769 . . . 894
48 -8M0014770 . . . 894
48 -8M0014771 . . . 894
48 -8M0014772 . . . 894
48 -8M0014773 . . . 894
48 -8M0014774 . . . 894
48 -8M0014775 . . . 894
48 -8M0014776 . . . 894
48 -8M0014777 . . . 894
48 -8M0014778 . . . 894
48 -8M0014779 . . . 894
48 -8M0014780 . . . 894
48 -8M0014781 . . . 894
48 -8M0014782 . . . 894
48 -8M0014783 . . . 895
48 -8M0014784 . . . 895
48 -8M0014785 . . . 895
48 -8M0014786 . . . 895
48 -8M0014787 . . . 895
48 -8M0014788 . . . 895
48 -8M0014797 . . . 894
48 -8M0014798 . . . 894
48 -8M0014799 . . . 894
48 -8M0014800 . . . 894
48 -8M0014801 . . . 894
48 -8M0014802 . . . 894
48 -8M0014803 . . . 894
48 -8M0014804 . . . 894
48 -8M0014805 . . . 894
48 -8M0014806 . . . 894
48 -8M0014807 . . . 894
48 -8M0014808 . . . 894
48 -8M0014809 . . . 894
48 -8M0014810 . . . 894
48 -8M0014811 . . . 894
48 -8M0014812 . . . 894
48 -8M0014813 . . . 895
48 -8M0014814 . . . 895
48 -8M0014815 . . . 895
48 -8M0014816 . . . 895
48 -8M0014817 . . . 895
48 -8M0014818 . . . 895
48 -8M0014827 . . . 894
48 -8M0014828 . . . 894
48 -8M0014829 . . . 894
48 -8M0014830 . . . 894
48 -8M0014831 . . . 894
48 -8M0014832 . . . 894
48 -8M0014833 . . . 894
48 -8M0014834 . . . 894
48 -8M0014835 . . . 894
48 -8M0014836 . . . 894
48 -8M0014837 . . . 894
48 -8M0014838 . . . 894
48 -8M0014839 . . . 894
48 -8M0014840 . . . 894
48 -8M0014841 . . . 894
48 -8M0014842 . . . 894
48 -8M0014843 . . . 895
48 -8M0014844 . . . 895
48 -8M0014845 . . . 895
48 -8M0014846 . . . 895
48 -8M0014847 . . . 895
48 -8M0014848 . . . 895
48 -8M0014857 . . . 894
48 -8M0014858 . . . 894
48 -8M0014859 . . . 894
48 -8M0014860 . . . 894
48 -8M0014861 . . . 894
48 -8M0014862 . . . 894
48 -8M0014863 . . . 894
48 -8M0014864 . . . 894
48 -8M0014865 . . . 894
48 -8M0014866 . . . 894
48 -8M0014867 . . . 894
48 -8M0014868 . . . 894
48 -8M0014869 . . . 894
48 -8M0014870 . . . 894
48 -8M0014871 . . . 894
48 -8M0014872 . . . 894
48 -8M0014873 . . . 895
48 -8M0014874 . . . 895
48 -8M0014875 . . . 895
48 -8M0014876 . . . 895
48 -8M0014877 . . . 895
48 -8M0014878 . . . 895
48 -8M0014887 . . . 894
48 -8M0014888 . . . 894
48 -8M0014889 . . . 894
48 -8M0014890 . . . 894

48 -8M0014891 . . . 894
48 -8M0014892 . . . 894
48 -8M0014893 . . . 894
48 -8M0014894 . . . 894
48 -8M0014895 . . . 894
48 -8M0014896 . . . 894
48 -8M0014897 . . . 894
48 -8M0014898 . . . 894
48 -8M0014899 . . . 894
48 -8M0014900 . . . 894
48 -8M0014901 . . . 894
48 -8M0014902 . . . 894
48 -8M0014903 . . . 895
48 -8M0014904 . . . 895
48 -8M0014905 . . . 895
48 -8M0014906 . . . 895
48 -8M0014907 . . . 895
48 -8M0014908 . . . 895
48 -8M0014917 . . . 894
48 -8M0014918 . . . 894
48 -8M0014919 . . . 894
48 -8M0014920 . . . 894
48 -8M0014921 . . . 894
48 -8M0014922 . . . 894
48 -8M0014923 . . . 894
48 -8M0014924 . . . 894
48 -8M0014925 . . . 894
48 -8M0014926 . . . 894
48 -8M0014927 . . . 894
48 -8M0014928 . . . 894
48 -8M0014929 . . . 894
48 -8M0014930 . . . 894
48 -8M0014931 . . . 894
48 -8M0014932 . . . 894
48 -8M0014933 . . . 895
48 -8M0014934 . . . 895
48 -8M0014935 . . . 895
48 -8M0014936 . . . 895
48 -8M0014937 . . . 895
48 -8M0014938 . . . 895
48 -8M0014947 . . . 894
48 -8M0014948 . . . 894
48 -8M0014949 . . . 894
48 -8M0014950 . . . 894
48 -8M0014951 . . . 894
48 -8M0014952 . . . 894
48 -8M0014953 . . . 894
48 -8M0014954 . . . 894
48 -8M0014955 . . . 894
48 -8M0014956 . . . 894
48 -8M0014957 . . . 894
48 -8M0014958 . . . 894
48 -8M0014959 . . . 894
48 -8M0014960 . . . 894
48 -8M0014961 . . . 894
48 -8M0014962 . . . 894
48 -8M0014963 . . . 895
48 -8M0014964 . . . 895
48 -8M0014965 . . . 895
48 -8M0014966 . . . 895
48 -8M0014967 . . . 895
48 -8M0014968 . . . 895
48 -8M0014977 . . . 894
48 -8M0014978 . . . 894
48 -8M0014979 . . . 894
48 -8M0014980 . . . 894
48 -8M0014981 . . . 894
48 -8M0014982 . . . 894
48 -8M0014983 . . . 894
48 -8M0014984 . . . 894
48 -8M0014985 . . . 894
48 -8M0014986 . . . 894
48 -8M0014987 . . . 894
48 -8M0014988 . . . 894
48 -8M0014989 . . . 894
48 -8M0014990 . . . 894
48 -8M0014991 . . . 894
48 -8M0014992 . . . 894
48 -8M0014993 . . . 895
48 -8M0014994 . . . 895
48 -8M0014995 . . . 895
48 -8M0014996 . . . 895
48 -8M0014997 . . . 895
48 -8M0014998 . . . 895
48 -8M0015007 . . . 894
48 -8M0015008 . . . 894
48 -8M0015009 . . . 894
48 -8M0015010 . . . 894
48 -8M0015011 . . . 894
48 -8M0015012 . . . 894
48 -8M0015013 . . . 894
48 -8M0015014 . . . 894
48 -8M0015015 . . . 894
48 -8M0015016 . . . 894
48 -8M0015017 . . . 894
48 -8M0015018 . . . 894
48 -8M0015019 . . . 894
48 -8M0015020 . . . 894
48 -8M0015021 . . . 894
48 -8M0015022 . . . 894
48 -8M0015023 . . . 895
48 -8M0015024 . . . 895
48 -8M0015025 . . . 895
48 -8M0015026 . . . 895
48 -8M0015027 . . . 895
48 -8M0015028 . . . 895
48 -8M0015037 . . . 894
48 -8M0015038 . . . 894
48 -8M0015039 . . . 894
48 -8M0015040 . . . 894

48 -8M0015041 . . . 894
48 -8M0015042 . . . 894
48 -8M0015043 . . . 894
48 -8M0015044 . . . 894
48 -8M0015045 . . . 894
48 -8M0015046 . . . 894
48 -8M0015047 . . . 894
48 -8M0015048 . . . 894
48 -8M0015049 . . . 894
48 -8M0015050 . . . 894
48 -8M0015051 . . . 895
48 -8M0015052 . . . 895
48 -8M0015053 . . . 895
48 -8M0015054 . . . 895
48 -8M0015055 . . . 895
48 -8M0015056 . . . 895
48 -8M0015057 . . . 895
48 -8M0015058 . . . 895
48 -8M0015067 . . . 906
48 -8M0015068 . . . 906
48 -8M0015069 . . . 906
48 -8M0015070 . . . 906
48 -8M0015071 . . . 906
48 -8M0015072 . . . 906
48 -8M0015073 . . . 906
48 -8M0015074 . . . 906
48 -8M0015075 . . . 907
48 -8M0015076 . . . 907
48 -8M0015077 . . . 907
48 -8M0015078 . . . 907
48 -8M0015079 . . . 907
48 -8M0015080 . . . 907
48 -8M0015081 . . . 907
48 -8M0015082 . . . 907
48 -8M0015083 . . . 907
48 -8M0015084 . . . 907
48 -8M0015085 . . . 907
48 -8M0015086 . . . 907
48 -8M0015087 . . . 907
48 -8M0015088 . . . 907
48 -8M0015097 . . . 906
48 -8M0015098 . . . 906
48 -8M0015099 . . . 906
48 -8M0015100 . . . 906
48 -8M0015101 . . . 906
48 -8M0015102 . . . 906
48 -8M0015103 . . . 906
48 -8M0015104 . . . 906
48 -8M0015105 . . . 907
48 -8M0015106 . . . 907
48 -8M0015107 . . . 907
48 -8M0015108 . . . 907
48 -8M0015109 . . . 907
48 -8M0015110 . . . 907
48 -8M0015111 . . . 907
48 -8M0015112 . . . 907
48 -8M0015113 . . . 907
48 -8M0015114 . . . 907
48 -8M0015115 . . . 907
48 -8M0015116 . . . 907
48 -8M0015117 . . . 907
48 -8M0015118 . . . 907
48 -8M0015127 . . . 906
48 -8M0015128 . . . 906
48 -8M0015129 . . . 906
48 -8M0015130 . . . 906
48 -8M0015131 . . . 906
48 -8M0015132 . . . 906
48 -8M0015133 . . . 906
48 -8M0015134 . . . 906
48 -8M0015135 . . . 907
48 -8M0015136 . . . 907
48 -8M0015137 . . . 907
48 -8M0015138 . . . 907
48 -8M0015139 . . . 907
48 -8M0015140 . . . 907
48 -8M0015141 . . . 907
48 -8M0015142 . . . 907
48 -8M0015143 . . . 907
48 -8M0015144 . . . 907
48 -8M0015145 . . . 907
48 -8M0015146 . . . 907
48 -8M0015147 . . . 907
48 -8M0015148 . . . 907
48 -8M0015157 . . . 906
48 -8M0015158 . . . 906
48 -8M0015159 . . . 906
48 -8M0015160 . . . 906
48 -8M0015161 . . . 906
48 -8M0015162 . . . 906
48 -8M0015163 . . . 906
48 -8M0015164 . . . 906
48 -8M0015165 . . . 907
48 -8M0015166 . . . 907
48 -8M0015167 . . . 907
48 -8M0015168 . . . 907
48 -8M0015169 . . . 907
48 -8M0015170 . . . 907
48 -8M0015171 . . . 907
48 -8M0015172 . . . 907
48 -8M0015173 . . . 907
48 -8M0015174 . . . 907
48 -8M0015175 . . . 907
48 -8M0015176 . . . 907
48 -8M0015177 . . . 907
48 -8M0015178 . . . 907
48 -8M0015187 . . . 906
48 -8M0015188 . . . 906
48 -8M0015189 . . . 906
48 -8M0015190 . . . 906

48 -8M0015191 . . . 906
48 -8M0015192 . . . 906
48 -8M0015193 . . . 906
48 -8M0015194 . . . 906
48 -8M0015195 . . . 907
48 -8M0015196 . . . 907
48 -8M0015197 . . . 907
48 -8M0015198 . . . 907
48 -8M0015199 . . . 907
48 -8M0015200 . . . 907
48 -8M0015201 . . . 907
48 -8M0015202 . . . 907
48 -8M0015203 . . . 907
48 -8M0015204 . . . 907
48 -8M0015205 . . . 907
48 -8M0015206 . . . 907
48 -8M0015207 . . . 907
48 -8M0015208 . . . 907
48 -8M0015217 . . . 906
48 -8M0015218 . . . 906
48 -8M0015219 . . . 906
48 -8M0015220 . . . 906
48 -8M0015221 . . . 906
48 -8M0015222 . . . 906
48 -8M0015223 . . . 906
48 -8M0015224 . . . 906
48 -8M0015225 . . . 907
48 -8M0015226 . . . 907
48 -8M0015227 . . . 907
48 -8M0015228 . . . 907
48 -8M0015229 . . . 907
48 -8M0015230 . . . 907
48 -8M0015231 . . . 907
48 -8M0015232 . . . 907
48 -8M0015233 . . . 907
48 -8M0015234 . . . 907
48 -8M0015235 . . . 907
48 -8M0015236 . . . 907
48 -8M0015237 . . . 907
48 -8M0015238 . . . 907
48 -8M0015247 . . . 906
48 -8M0015248 . . . 906
48 -8M0015249 . . . 906
48 -8M0015250 . . . 906
48 -8M0015251 . . . 906
48 -8M0015252 . . . 906
48 -8M0015253 . . . 906
48 -8M0015254 . . . 906
48 -8M0015255 . . . 907
48 -8M0015256 . . . 907
48 -8M0015257 . . . 907
48 -8M0015258 . . . 907
48 -8M0015259 . . . 907
48 -8M0015260 . . . 907
48 -8M0015261 . . . 907
48 -8M0015262 . . . 907
48 -8M0015263 . . . 907
48 -8M0015264 . . . 907
48 -8M0015265 . . . 907
48 -8M0015266 . . . 907
48 -8M0015267 . . . 907
48 -8M0015268 . . . 907
48 -8M0015277 . . . 906
48 -8M0015278 . . . 906
48 -8M0015279 . . . 906
48 -8M0015280 . . . 906
48 -8M0015281 . . . 906
48 -8M0015282 . . . 906
48 -8M0015283 . . . 906
48 -8M0015284 . . . 906
48 -8M0015285 . . . 907
48 -8M0015286 . . . 907
48 -8M0015287 . . . 907
48 -8M0015288 . . . 907
48 -8M0015289 . . . 907
48 -8M0015290 . . . 907
48 -8M0015291 . . . 907
48 -8M0015292 . . . 907
48 -8M0015293 . . . 907
48 -8M0015294 . . . 907
48 -8M0015295 . . . 907
48 -8M0015296 . . . 907
48 -8M0015297 . . . 907
48 -8M0015298 . . . 907
48 -8M0015307 . . . 906
48 -8M0015308 . . . 906
48 -8M0015309 . . . 906
48 -8M0015310 . . . 906
48 -8M0015311 . . . 906
48 -8M0015312 . . . 906
48 -8M0015313 . . . 906
48 -8M0015314 . . . 906
48 -8M0015315 . . . 907
48 -8M0015316 . . . 907
48 -8M0015317 . . . 907
48 -8M0015318 . . . 907
48 -8M0015319 . . . 907
48 -8M0015320 . . . 907
48 -8M0015321 . . . 907
48 -8M0015322 . . . 907
48 -8M0015323 . . . 907
48 -8M0015324 . . . 907
48 -8M0015325 . . . 907
48 -8M0015326 . . . 907
48 -8M0015327 . . . 907
48 -8M0015328 . . . 907
48 -8M0015337 . . . 906
48 -8M0015338 . . . 906
48 -8M0015339 . . . 906
48 -8M0015340 . . . 906

48 -8M0015341 . . . 906
48 -8M0015342 . . . 906
48 -8M0015343 . . . 906
48 -8M0015344 . . . 906
48 -8M0015345 . . . 907
48 -8M0015346 . . . 907
48 -8M0015347 . . . 907
48 -8M0015348 . . . 907
48 -8M0015349 . . . 907
48 -8M0015350 . . . 907
48 -8M0015351 . . . 907
48 -8M0015352 . . . 907
48 -8M0015353 . . . 907
48 -8M0015354 . . . 907
48 -8M0015355 . . . 907
48 -8M0015356 . . . 907
48 -8M0015357 . . . 907
48 -8M0015358 . . . 907
48 -8M0015367 . . . 906
48 -8M0015368 . . . 906
48 -8M0015369 . . . 906
48 -8M0015370 . . . 906
48 -8M0015371 . . . 906
48 -8M0015372 . . . 906
48 -8M0015373 . . . 907
48 -8M0015374 . . . 907
48 -8M0015375 . . . 907
48 -8M0015376 . . . 907
48 -8M0015377 . . . 907
48 -8M0015378 . . . 907
48 -8M0015379 . . . 907
48 -8M0015380 . . . 907
48 -8M0015381 . . . 907
48 -8M0015382 . . . 907
48 -8M0015383 . . . 907
48 -8M0015384 . . . 907
48 -8M0015385 . . . 907
48 -8M0015386 . . . 907
48 -8M0015387 . . . 907
48 -8M0015388 . . . 907
48 -8M0015397 . . . 906
48 -8M0015398 . . . 906
48 -8M0015399 . . . 906
48 -8M0015400 . . . 906
48 -8M0015401 . . . 906
48 -8M0015402 . . . 906
48 -8M0015403 . . . 907
48 -8M0015404 . . . 907
48 -8M0015405 . . . 907
48 -8M0015406 . . . 907
48 -8M0015407 . . . 907
48 -8M0015408 . . . 907
48 -8M0015409 . . . 907
48 -8M0015410 . . . 907
48 -8M0015411 . . . 907
48 -8M0015412 . . . 907
48 -8M0015413 . . . 907
48 -8M0015414 . . . 907
48 -8M0015415 . . . 907
48 -8M0015416 . . . 907
48 -8M0015417 . . . 907
48 -8M0015418 . . . 907
48 -8M0015427 . . . 906
48 -8M0015428 . . . 906
48 -8M0015429 . . . 906
48 -8M0015430 . . . 906
48 -8M0015431 . . . 906
48 -8M0015432 . . . 906
48 -8M0015433 . . . 907
48 -8M0015434 . . . 907
48 -8M0015435 . . . 907
48 -8M0015436 . . . 907
48 -8M0015437 . . . 907
48 -8M0015438 . . . 907
48 -8M0015439 . . . 907
48 -8M0015440 . . . 907
48 -8M0015441 . . . 907
48 -8M0015442 . . . 907
48 -8M0015443 . . . 907
48 -8M0015444 . . . 907
48 -8M0015445 . . . 907
48 -8M0015446 . . . 907
48 -8M0015447 . . . 907
48 -8M0015448 . . . 907
48 -8M0017089 . . . 896
48 -8M0017090 . . . 896
48 -8M0017091 . . . 896
48 -8M0017092 . . . 896
48 -8M0017093 . . . 896
48 -8M0017094 . . . 896
48 -8M0017095 . . . 896
48 -8M0017096 . . . 896
48 -8M0017097 . . . 897
48 -8M0017098 . . . 897
48 -8M0017099 . . . 897
48 -8M0017100 . . . 897
48 -8M0017101 . . . 897
48 -8M0017102 . . . 897
48 -8M0017103 . . . 897
48 -8M0017104 . . . 897
48 -8M0017105 . . . 897
48 -8M0017106 . . . 897
48 -8M0017107 . . . 897
48 -8M0017108 . . . 897
48 -8M0017109 . . . 897
48 -8M0017110 . . . 897
48 -8M0017119 . . . 896
48 -8M0017120 . . . 896
48 -8M0017121 . . . 896
48 -8M0017122 . . . 896

48 -8M0017123 . . . 896
48 -8M0017124 . . . 896
48 -8M0017125 . . . 896
48 -8M0017126 . . . 896
48 -8M0017127 . . . 897
48 -8M0017128 . . . 897
48 -8M0017129 . . . 897
48 -8M0017130 . . . 897
48 -8M0017131 . . . 897
48 -8M0017132 . . . 897
48 -8M0017133 . . . 897
48 -8M0017134 . . . 897
48 -8M0017135 . . . 897
48 -8M0017136 . . . 897
48 -8M0017137 . . . 897
48 -8M0017138 . . . 897
48 -8M0017139 . . . 897
48 -8M0017140 . . . 897
48 -8M0017149 . . . 896
48 -8M0017150 . . . 896
48 -8M0017151 . . . 896
48 -8M0017152 . . . 896
48 -8M0017153 . . . 896
48 -8M0017154 . . . 896
48 -8M0017155 . . . 896
48 -8M0017156 . . . 896
48 -8M0017157 . . . 897
48 -8M0017158 . . . 897
48 -8M0017159 . . . 897
48 -8M0017160 . . . 897
48 -8M0017161 . . . 897
48 -8M0017162 . . . 897
48 -8M0017163 . . . 897
48 -8M0017164 . . . 897
48 -8M0017165 . . . 897
48 -8M0017166 . . . 897
48 -8M0017167 . . . 897
48 -8M0017168 . . . 897
48 -8M0017169 . . . 897
48 -8M0017170 . . . 897
48 -8M0017179 . . . 896
48 -8M0017181 . . . 896
48 -8M0017182 . . . 896
48 -8M0017183 . . . 896
48 -8M0017184 . . . 896
48 -8M0017185 . . . 896
48 -8M0017186 . . . 896
48 -8M0017187 . . . 897
48 -8M0017188 . . . 897
48 -8M0017189 . . . 897
48 -8M0017190 . . . 897
48 -8M0017191 . . . 897
48 -8M0017192 . . . 897
48 -8M0017193 . . . 897
48 -8M0017194 . . . 897
48 -8M0017195 . . . 897
48 -8M0017196 . . . 897
48 -8M0017197 . . . 897
48 -8M0017198 . . . 897
48 -8M0017199 . . . 897
48 -8M0017200 . . . 897
48 -8M0017209 . . . 896
48 -8M0017210 . . . 896
48 -8M0017211 . . . 896
48 -8M0017212 . . . 896
48 -8M0017213 . . . 896
48 -8M0017214 . . . 896
48 -8M0017215 . . . 896
48 -8M0017216 . . . 896
48 -8M0017217 . . . 897
48 -8M0017218 . . . 897
48 -8M0017219 . . . 897
48 -8M0017220 . . . 897
48 -8M0017221 . . . 897
48 -8M0017222 . . . 897
48 -8M0017223 . . . 897
48 -8M0017224 . . . 897
48 -8M0017225 . . . 897
48 -8M0017226 . . . 897
48 -8M0017227 . . . 897
48 -8M0017228 . . . 897
48 -8M0017229 . . . 897
48 -8M0017230 . . . 897
48 -8M0017239 . . . 896
48 -8M0017240 . . . 896
48 -8M0017241 . . . 896
48 -8M0017242 . . . 896
48 -8M0017243 . . . 896
48 -8M0017244 . . . 896
48 -8M0017245 . . . 896
48 -8M0017246 . . . 896
48 -8M0017247 . . . 897
48 -8M0017248 . . . 897
48 -8M0017249 . . . 897
48 -8M0017250 . . . 897
48 -8M0017251 . . . 897
48 -8M0017252 . . . 897
48 -8M0017253 . . . 897
48 -8M0017254 . . . 897
48 -8M0017255 . . . 897
48 -8M0017256 . . . 897
48 -8M0017257 . . . 897
48 -8M0017258 . . . 897
48 -8M0017259 . . . 897
48 -8M0017260 . . . 897
48 -8M0017269 . . . 896
48 -8M0017271 . . . 896
48 -8M0017272 . . . 896
48 -8M0017273 . . . 896
48 -8M0017274 . . . 896

48 -8M0017275 . . . 896
48 -8M0017276 . . . 896
48 -8M0017277 . . . 897
48 -8M0017278 . . . 897
48 -8M0017279 . . . 897
48 -8M0017280 . . . 897
48 -8M0017281 . . . 897
48 -8M0017282 . . . 897
48 -8M0017283 . . . 897
48 -8M0017284 . . . 897
48 -8M0017285 . . . 897
48 -8M0017286 . . . 897
48 -8M0017287 . . . 897
48 -8M0017288 . . . 897
48 -8M0017289 . . . 897
48 -8M0017290 . . . 897
48 -8M0017299 . . . 896
48 -8M0017300 . . . 896
48 -8M0017301 . . . 896
48 -8M0017302 . . . 896
48 -8M0017303 . . . 896
48 -8M0017304 . . . 896
48 -8M0017305 . . . 896
48 -8M0017306 . . . 896
48 -8M0017307 . . . 897
48 -8M0017308 . . . 897
48 -8M0017309 . . . 897
48 -8M0017310 . . . 897
48 -8M0017311 . . . 897
48 -8M0017312 . . . 897
48 -8M0017313 . . . 897
48 -8M0017314 . . . 897
48 -8M0017315 . . . 897
48 -8M0017316 . . . 897
48 -8M0017317 . . . 897
48 -8M0017318 . . . 897
48 -8M0017319 . . . 897
48 -8M0017320 . . . 897
48 -8M0017329 . . . 896
48 -8M0017330 . . . 896
48 -8M0017331 . . . 896
48 -8M0017332 . . . 896
48 -8M0017333 . . . 896
48 -8M0017334 . . . 896
48 -8M0017335 . . . 896
48 -8M0017336 . . . 896
48 -8M0017337 . . . 897
48 -8M0017338 . . . 897
48 -8M0017339 . . . 897
48 -8M0017340 . . . 897
48 -8M0017341 . . . 897
48 -8M0017342 . . . 897
48 -8M0017343 . . . 897
48 -8M0017344 . . . 897
48 -8M0017345 . . . 897
48 -8M0017346 . . . 897
48 -8M0017347 . . . 897
48 -8M0017348 . . . 897
48 -8M0017349 . . . 897
48 -8M0017350 . . . 897
48 -8M0017359 . . . 896
48 -8M0017360 . . . 896
48 -8M0017361 . . . 896
48 -8M0017362 . . . 896
48 -8M0017363 . . . 896
48 -8M0017364 . . . 896
48 -8M0017365 . . . 896
48 -8M0017366 . . . 896
48 -8M0017367 . . . 897
48 -8M0017368 . . . 897
48 -8M0017369 . . . 897
48 -8M0017370 . . . 897
48 -8M0017371 . . . 897
48 -8M0017372 . . . 897
48 -8M0017373 . . . 897
48 -8M0017374 . . . 897
48 -8M0017375 . . . 897
48 -8M0017376 . . . 897
48 -8M0017377 . . . 897
48 -8M0017378 . . . 897
48 -8M0017379 . . . 897
48 -8M0017380 . . . 897
48 -8M0017389 . . . 896
48 -8M0017390 . . . 896
48 -8M0017391 . . . 896
48 -8M0017392 . . . 896
48 -8M0017393 . . . 896
48 -8M0017394 . . . 896
48 -8M0017395 . . . 897
48 -8M0017396 . . . 897
48 -8M0017397 . . . 897
48 -8M0017398 . . . 897
48 -8M0017399 . . . 897
48 -8M0017400 . . . 897
48 -8M0017401 . . . 897
48 -8M0017402 . . . 897
48 -8M0017403 . . . 897
48 -8M0017404 . . . 897
48 -8M0017405 . . . 897
48 -8M0017406 . . . 897
48 -8M0017407 . . . 897
48 -8M0017408 . . . 897
48 -8M0017409 . . . 897
48 -8M0017410 . . . 897
48 -8M0017419 . . . 896
48 -8M0017420 . . . 896
48 -8M0017421 . . . 896
48 -8M0017422 . . . 896
48 -8M0017423 . . . 896
48 -8M0017424 . . . 896

48 -8M0017425 . . . 897
48 -8M0017426 . . . 897
48 -8M0017427 . . . 897
48 -8M0017428 . . . 897
48 -8M0017429 . . . 897
48 -8M0017430 . . . 897
48 -8M0017431 . . . 897
48 -8M0017432 . . . 897
48 -8M0017433 . . . 897
48 -8M0017434 . . . 897
48 -8M0017435 . . . 897
48 -8M0017436 . . . 897
48 -8M0017437 . . . 897
48 -8M0017438 . . . 897
48 -8M0017439 . . . 897
48 -8M0017440 . . . 897
48 -8M0017449 . . . 896
48 -8M0017450 . . . 896
48 -8M0017451 . . . 896
48 -8M0017452 . . . 896
48 -8M0017453 . . . 896
48 -8M0017454 . . . 896
48 -8M0017455 . . . 897
48 -8M0017456 . . . 897
48 -8M0017457 . . . 897
48 -8M0017458 . . . 897
48 -8M0017459 . . . 897
48 -8M0017460 . . . 897
48 -8M0017461 . . . 897
48 -8M0017462 . . . 897
48 -8M0017463 . . . 897
48 -8M0017464 . . . 897
48 -8M0017465 . . . 897
48 -8M0017466 . . . 897
48 -8M0017467 . . . 897
48 -8M0017468 . . . 897
48 -8M0017469 . . . 897
48 -8M0017470 . . . 897
48 -8M0017479 . . . 908
48 -8M0017480 . . . 908
48 -8M0017481 . . . 908
48 -8M0017482 . . . 908
48 -8M0017483 . . . 908
48 -8M0017484 . . . 908
48 -8M0017485 . . . 908
48 -8M0017486 . . . 908
48 -8M0017487 . . . 908
48 -8M0017488 . . . 908
48 -8M0017489 . . . 908
48 -8M0017490 . . . 908
48 -8M0017491 . . . 908
48 -8M0017492 . . . 908
48 -8M0017493 . . . 908
48 -8M0017494 . . . 908
48 -8M0017495 . . . 909
48 -8M0017496 . . . 909
48 -8M0017497 . . . 909
48 -8M0017498 . . . 909
48 -8M0017499 . . . 909
48 -8M0017500 . . . 909
48 -8M0017509 . . . 908
48 -8M0017510 . . . 908
48 -8M0017511 . . . 908
48 -8M0017512 . . . 908
48 -8M0017513 . . . 908
48 -8M0017514 . . . 908
48 -8M0017515 . . . 908
48 -8M0017516 . . . 908
48 -8M0017517 . . . 908
48 -8M0017518 . . . 908
48 -8M0017519 . . . 908
48 -8M0017520 . . . 908
48 -8M0017521 . . . 908
48 -8M0017522 . . . 908
48 -8M0017523 . . . 908
48 -8M0017524 . . . 908
48 -8M0017525 . . . 909
48 -8M0017526 . . . 909
48 -8M0017527 . . . 909
48 -8M0017528 . . . 909
48 -8M0017529 . . . 909
48 -8M0017530 . . . 909
48 -8M0017539 . . . 908
48 -8M0017540 . . . 908
48 -8M0017541 . . . 908
48 -8M0017542 . . . 908
48 -8M0017543 . . . 908
48 -8M0017544 . . . 908
48 -8M0017545 . . . 908
48 -8M0017546 . . . 908
48 -8M0017547 . . . 908
48 -8M0017548 . . . 908
48 -8M0017549 . . . 908
48 -8M0017550 . . . 908
48 -8M0017551 . . . 908
48 -8M0017552 . . . 908
48 -8M0017553 . . . 908
48 -8M0017554 . . . 908
48 -8M0017555 . . . 909
48 -8M0017556 . . . 909
48 -8M0017557 . . . 909
48 -8M0017558 . . . 909
48 -8M0017559 . . . 909
48 -8M0017560 . . . 909
48 -8M0017569 . . . 908
48 -8M0017570 . . . 908
48 -8M0017571 . . . 908
48 -8M0017572 . . . 908
48 -8M0017573 . . . 908
48 -8M0017574 . . . 908

48 -8M0017575 . . . 908
48 -8M0017576 . . . 908
48 -8M0017577 . . . 908
48 -8M0017578 . . . 908
48 -8M0017579 . . . 908
48 -8M0017580 . . . 908
48 -8M0017581 . . . 908
48 -8M0017582 . . . 908
48 -8M0017583 . . . 908
48 -8M0017584 . . . 908
48 -8M0017585 . . . 909
48 -8M0017586 . . . 909
48 -8M0017587 . . . 909
48 -8M0017588 . . . 909
48 -8M0017589 . . . 909
48 -8M0017590 . . . 909
48 -8M0017599 . . . 908
48 -8M0017600 . . . 908
48 -8M0017601 . . . 908
48 -8M0017602 . . . 908
48 -8M0017603 . . . 908
48 -8M0017604 . . . 908
48 -8M0017605 . . . 908
48 -8M0017606 . . . 908
48 -8M0017607 . . . 908
48 -8M0017608 . . . 908
48 -8M0017609 . . . 908
48 -8M0017610 . . . 908
48 -8M0017611 . . . 908
48 -8M0017612 . . . 908
48 -8M0017613 . . . 908
48 -8M0017614 . . . 908
48 -8M0017615 . . . 909
48 -8M0017616 . . . 909
48 -8M0017617 . . . 909
48 -8M0017618 . . . 909
48 -8M0017619 . . . 909
48 -8M0017620 . . . 909
48 -8M0017629 . . . 908
48 -8M0017630 . . . 908
48 -8M0017631 . . . 908
48 -8M0017632 . . . 908
48 -8M0017633 . . . 908
48 -8M0017634 . . . 908
48 -8M0017635 . . . 908
48 -8M0017636 . . . 908
48 -8M0017637 . . . 908
48 -8M0017638 . . . 908
48 -8M0017639 . . . 908
48 -8M0017640 . . . 908
48 -8M0017641 . . . 908
48 -8M0017642 . . . 908
48 -8M0017643 . . . 908
48 -8M0017644 . . . 908
48 -8M0017645 . . . 909
48 -8M0017646 . . . 909
48 -8M0017647 . . . 909
48 -8M0017648 . . . 909
48 -8M0017649 . . . 909
48 -8M0017650 . . . 909
48 -8M0017659 . . . 908
48 -8M0017660 . . . 908
48 -8M0017661 . . . 908
48 -8M0017662 . . . 908
48 -8M0017663 . . . 908
48 -8M0017664 . . . 908
48 -8M0017665 . . . 908
48 -8M0017666 . . . 908
48 -8M0017667 . . . 908
48 -8M0017668 . . . 908
48 -8M0017669 . . . 908
48 -8M0017670 . . . 908
48 -8M0017671 . . . 908
48 -8M0017672 . . . 908
48 -8M0017673 . . . 908
48 -8M0017674 . . . 908
48 -8M0017675 . . . 909
48 -8M0017676 . . . 909
48 -8M0017677 . . . 909
48 -8M0017678 . . . 909
48 -8M0017679 . . . 909
48 -8M0017680 . . . 909
48 -8M0017689 . . . 908
48 -8M0017690 . . . 908
48 -8M0017691 . . . 908
48 -8M0017692 . . . 908
48 -8M0017693 . . . 908
48 -8M0017694 . . . 908
48 -8M0017695 . . . 908
48 -8M0017696 . . . 908
48 -8M0017697 . . . 908
48 -8M0017698 . . . 908
48 -8M0017699 . . . 908
48 -8M0017700 . . . 908
48 -8M0017701 . . . 908
48 -8M0017702 . . . 908
48 -8M0017703 . . . 908
48 -8M0017704 . . . 908
48 -8M0017705 . . . 909
48 -8M0017706 . . . 909
48 -8M0017707 . . . 909
48 -8M0017708 . . . 909
48 -8M0017709 . . . 909
48 -8M0017710 . . . 909
48 -8M0017719 . . . 908
48 -8M0017720 . . . 908
48 -8M0017721 . . . 908
48 -8M0017722 . . . 908
48 -8M0017723 . . . 908
48 -8M0017724 . . . 908

48 -8M0017725 . . . 908
48 -8M0017726 . . . 908
48 -8M0017727 . . . 908
48 -8M0017728 . . . 908
48 -8M0017729 . . . 908
48 -8M0017730 . . . 908
48 -8M0017731 . . . 908
48 -8M0017732 . . . 908
48 -8M0017733 . . . 908
48 -8M0017734 . . . 908
48 -8M0017735 . . . 909
48 -8M0017736 . . . 909
48 -8M0017737 . . . 909
48 -8M0017738 . . . 909
48 -8M0017739 . . . 909
48 -8M0017740 . . . 909
48 -8M0017749 . . . 908
48 -8M0017750 . . . 908
48 -8M0017751 . . . 908
48 -8M0017752 . . . 908
48 -8M0017753 . . . 908
48 -8M0017754 . . . 908
48 -8M0017755 . . . 908
48 -8M0017756 . . . 908
48 -8M0017757 . . . 908
48 -8M0017758 . . . 908
48 -8M0017759 . . . 908
48 -8M0017760 . . . 908
48 -8M0017761 . . . 908
48 -8M0017762 . . . 908
48 -8M0017763 . . . 908
48 -8M0017764 . . . 908
48 -8M0017765 . . . 909
48 -8M0017766 . . . 909
48 -8M0017767 . . . 909
48 -8M0017768 . . . 909
48 -8M0017769 . . . 909
48 -8M0017770 . . . 909
48 -8M0017779 . . . 908
48 -8M0017780 . . . 908
48 -8M0017781 . . . 908
48 -8M0017782 . . . 908
48 -8M0017783 . . . 908
48 -8M0017784 . . . 908
48 -8M0017785 . . . 908
48 -8M0017786 . . . 908
48 -8M0017787 . . . 908
48 -8M0017788 . . . 908
48 -8M0017789 . . . 908
48 -8M0017790 . . . 908
48 -8M0017791 . . . 908
48 -8M0017792 . . . 908
48 -8M0017793 . . . 908
48 -8M0017794 . . . 908
48 -8M0017795 . . . 909
48 -8M0017796 . . . 909
48 -8M0017797 . . . 909
48 -8M0017798 . . . 909
48 -8M0017799 . . . 909
48 -8M0017800 . . . 909
48 -8M0017809 . . . 908
48 -8M0017810 . . . 908
48 -8M0017811 . . . 908
48 -8M0017812 . . . 908
48 -8M0017813 . . . 908
48 -8M0017814 . . . 908
48 -8M0017815 . . . 908
48 -8M0017816 . . . 908
48 -8M0017817 . . . 908
48 -8M0017818 . . . 908
48 -8M0017819 . . . 908
48 -8M0017820 . . . 908
48 -8M0017821 . . . 908
48 -8M0017822 . . . 908
48 -8M0017823 . . . 908
48 -8M0017824 . . . 908
48 -8M0017825 . . . 909
48 -8M0017826 . . . 909
48 -8M0017827 . . . 909
48 -8M0017828 . . . 909
48 -8M0017829 . . . 909
48 -8M0017830 . . . 909
48 -8M0017839 . . . 908
48 -8M0017840 . . . 908
48 -8M0017841 . . . 908
48 -8M0017842 . . . 908
48 -8M0017843 . . . 908
48 -8M0017844 . . . 908
48 -8M0017845 . . . 908
48 -8M0017846 . . . 908
48 -8M0017847 . . . 908
48 -8M0017848 . . . 908
48 -8M0017849 . . . 908
48 -8M0017850 . . . 908
48 -8M0017851 . . . 908
48 -8M0017852 . . . 908
48 -8M0017853 . . . 909
48 -8M0017854 . . . 909
48 -8M0017855 . . . 909
48 -8M0017856 . . . 909
48 -8M0017857 . . . 909
48 -8M0017858 . . . 909
48 -8M0017859 . . . 909
48 -8M0017860 . . . 909
48 -8M0018259 . . . 897
48 -8M0018260 . . . 897
48 -8M0018261 . . . 898
48 -8M0018262 . . . 898
48 -8M0018263 . . . 898
48 -8M0018264 . . . 898

48 -8M0018265 . . . 898
48 -8M0018266 . . . 898
48 -8M0018267 . . . 898
48 -8M0018268 . . . 898
48 -8M0018269 . . . 898
48 -8M0018270 . . . 898
48 -8M0018271 . . . 898
48 -8M0018272 . . . 898
48 -8M0018273 . . . 898
48 -8M0018274 . . . 898
48 -8M0018275 . . . 898
48 -8M0018276 . . . 898
48 -8M0018277 . . . 899
48 -8M0018278 . . . 899
48 -8M0018279 . . . 899
48 -8M0018280 . . . 899
48 -8M0018289 . . . 897
48 -8M0018290 . . . 897
48 -8M0018291 . . . 898
48 -8M0018292 . . . 898
48 -8M0018293 . . . 898
48 -8M0018294 . . . 898
48 -8M0018295 . . . 898
48 -8M0018296 . . . 898
48 -8M0018297 . . . 898
48 -8M0018298 . . . 898
48 -8M0018299 . . . 898
48 -8M0018300 . . . 898
48 -8M0018301 . . . 898
48 -8M0018302 . . . 898
48 -8M0018303 . . . 898
48 -8M0018304 . . . 898
48 -8M0018305 . . . 898
48 -8M0018306 . . . 898
48 -8M0018307 . . . 899
48 -8M0018308 . . . 899
48 -8M0018309 . . . 899
48 -8M0018310 . . . 899
48 -8M0018319 . . . 897
48 -8M0018320 . . . 897
48 -8M0018321 . . . 898
48 -8M0018322 . . . 898
48 -8M0018323 . . . 898
48 -8M0018324 . . . 898
48 -8M0018325 . . . 898
48 -8M0018326 . . . 898
48 -8M0018327 . . . 898
48 -8M0018328 . . . 898
48 -8M0018329 . . . 898
48 -8M0018330 . . . 898
48 -8M0018331 . . . 898
48 -8M0018332 . . . 898
48 -8M0018333 . . . 898
48 -8M0018334 . . . 898
48 -8M0018335 . . . 898
48 -8M0018336 . . . 898
48 -8M0018337 . . . 899
48 -8M0018338 . . . 899
48 -8M0018339 . . . 899
48 -8M0018340 . . . 899
48 -8M0018349 . . . 897
48 -8M0018350 . . . 897
48 -8M0018351 . . . 898
48 -8M0018352 . . . 898
48 -8M0018353 . . . 898
48 -8M0018354 . . . 898
48 -8M0018355 . . . 898
48 -8M0018356 . . . 898
48 -8M0018357 . . . 898
48 -8M0018358 . . . 898
48 -8M0018359 . . . 898
48 -8M0018360 . . . 898
48 -8M0018361 . . . 898
48 -8M0018362 . . . 898
48 -8M0018363 . . . 898
48 -8M0018364 . . . 898
48 -8M0018365 . . . 898
48 -8M0018366 . . . 898
48 -8M0018367 . . . 899
48 -8M0018368 . . . 899
48 -8M0018369 . . . 899
48 -8M0018370 . . . 899
48 -8M0018379 . . . 897
48 -8M0018380 . . . 897
48 -8M0018381 . . . 898
48 -8M0018382 . . . 898
48 -8M0018383 . . . 898
48 -8M0018384 . . . 898
48 -8M0018385 . . . 898
48 -8M0018386 . . . 898
48 -8M0018387 . . . 898
48 -8M0018388 . . . 898
48 -8M0018389 . . . 898
48 -8M0018390 . . . 898
48 -8M0018391 . . . 898
48 -8M0018392 . . . 898
48 -8M0018393 . . . 898
48 -8M0018394 . . . 898
48 -8M0018395 . . . 898
48 -8M0018396 . . . 898
48 -8M0018397 . . . 899
48 -8M0018398 . . . 899
48 -8M0018399 . . . 899
48 -8M0018400 . . . 899
48 -8M0018409 . . . 897
48 -8M0018410 . . . 897
48 -8M0018411 . . . 898
48 -8M0018412 . . . 898
48 -8M0018413 . . . 898
48 -8M0018414 . . . 898

48 -8M0018415 . . . 898
48 -8M0018416 . . . 898
48 -8M0018417 . . . 898
48 -8M0018418 . . . 898
48 -8M0018419 . . . 898
48 -8M0018420 . . . 898
48 -8M0018421 . . . 898
48 -8M0018422 . . . 898
48 -8M0018423 . . . 898
48 -8M0018424 . . . 898
48 -8M0018425 . . . 898
48 -8M0018426 . . . 898
48 -8M0018427 . . . 899
48 -8M0018428 . . . 899
48 -8M0018429 . . . 899
48 -8M0018430 . . . 899
48 -8M0018439 . . . 897
48 -8M0018440 . . . 897
48 -8M0018441 . . . 898
48 -8M0018442 . . . 898
48 -8M0018443 . . . 898
48 -8M0018444 . . . 898
48 -8M0018445 . . . 898
48 -8M0018446 . . . 898
48 -8M0018447 . . . 898
48 -8M0018448 . . . 898
48 -8M0018449 . . . 898
48 -8M0018450 . . . 898
48 -8M0018451 . . . 898
48 -8M0018452 . . . 898
48 -8M0018453 . . . 898
48 -8M0018454 . . . 898
48 -8M0018455 . . . 898
48 -8M0018456 . . . 898
48 -8M0018457 . . . 899
48 -8M0018458 . . . 899
48 -8M0018459 . . . 899
48 -8M0018460 . . . 899
48 -8M0018469 . . . 898
48 -8M0018470 . . . 898
48 -8M0018471 . . . 898
48 -8M0018472 . . . 898
48 -8M0018473 . . . 898
48 -8M0018474 . . . 898
48 -8M0018475 . . . 898
48 -8M0018476 . . . 898
48 -8M0018477 . . . 898
48 -8M0018478 . . . 898
48 -8M0018479 . . . 898
48 -8M0018480 . . . 898
48 -8M0018481 . . . 898
48 -8M0018482 . . . 898
48 -8M0018483 . . . 898
48 -8M0018484 . . . 898
48 -8M0018485 . . . 898
48 -8M0018486 . . . 898
48 -8M0018487 . . . 899
48 -8M0018488 . . . 899
48 -8M0018489 . . . 899
48 -8M0018490 . . . 899
48 -8M0018499 . . . 898
48 -8M0018500 . . . 898
48 -8M0018501 . . . 898
48 -8M0018502 . . . 898
48 -8M0018503 . . . 898
48 -8M0018504 . . . 898
48 -8M0018505 . . . 898
48 -8M0018506 . . . 898
48 -8M0018507 . . . 898
48 -8M0018508 . . . 898
48 -8M0018509 . . . 898
48 -8M0018510 . . . 898
48 -8M0018511 . . . 898
48 -8M0018512 . . . 898
48 -8M0018513 . . . 898
48 -8M0018514 . . . 898
48 -8M0018515 . . . 898
48 -8M0018516 . . . 898
48 -8M0018517 . . . 899
48 -8M0018518 . . . 899
48 -8M0018519 . . . 899
48 -8M0018520 . . . 899
48 -8M0018529 . . . 898
48 -8M0018530 . . . 898
48 -8M0018531 . . . 898
48 -8M0018532 . . . 898
48 -8M0018533 . . . 898
48 -8M0018534 . . . 898
48 -8M0018535 . . . 898
48 -8M0018536 . . . 898
48 -8M0018537 . . . 898
48 -8M0018538 . . . 898
48 -8M0018539 . . . 898
48 -8M0018540 . . . 898
48 -8M0018541 . . . 898
48 -8M0018542 . . . 898
48 -8M0018543 . . . 898
48 -8M0018544 . . . 898
48 -8M0018545 . . . 898
48 -8M0018546 . . . 898
48 -8M0018547 . . . 899
48 -8M0018548 . . . 899
48 -8M0018549 . . . 899
48 -8M0018550 . . . 899
48 -8M0018559 . . . 898
48 -8M0018560 . . . 898
48 -8M0018561 . . . 898
48 -8M0018562 . . . 898
48 -8M0018563 . . . 898
48 -8M0018564 . . . 898

48 -8M0018565 . . . 898
48 -8M0018566 . . . 898
48 -8M0018567 . . . 898
48 -8M0018568 . . . 898
48 -8M0018569 . . . 898
48 -8M0018570 . . . 898
48 -8M0018571 . . . 898
48 -8M0018572 . . . 898
48 -8M0018573 . . . 898
48 -8M0018574 . . . 898
48 -8M0018575 . . . 898
48 -8M0018576 . . . 898
48 -8M0018577 . . . 899
48 -8M0018578 . . . 899
48 -8M0018579 . . . 899
48 -8M0018580 . . . 899
48 -8M0018589 . . . 898
48 -8M0018590 . . . 898
48 -8M0018591 . . . 898
48 -8M0018592 . . . 898
48 -8M0018593 . . . 898
48 -8M0018594 . . . 898
48 -8M0018595 . . . 898
48 -8M0018596 . . . 898
48 -8M0018597 . . . 898
48 -8M0018598 . . . 898
48 -8M0018599 . . . 898
48 -8M0018600 . . . 898
48 -8M0018601 . . . 898
48 -8M0018602 . . . 898
48 -8M0018603 . . . 898
48 -8M0018604 . . . 898
48 -8M0018605 . . . 899
48 -8M0018606 . . . 899
48 -8M0018607 . . . 899
48 -8M0018608 . . . 899
48 -8M0018609 . . . 899
48 -8M0018610 . . . 899
48 -8M0018619 . . . 898
48 -8M0018620 . . . 898
48 -8M0018621 . . . 898
48 -8M0018622 . . . 898
48 -8M0018623 . . . 898
48 -8M0018624 . . . 898
48 -8M0018625 . . . 898
48 -8M0018626 . . . 898
48 -8M0018627 . . . 898
48 -8M0018628 . . . 898
48 -8M0018629 . . . 898
48 -8M0018630 . . . 898
48 -8M0018631 . . . 898
48 -8M0018632 . . . 898
48 -8M0018633 . . . 898
48 -8M0018634 . . . 898
48 -8M0018635 . . . 899
48 -8M0018636 . . . 899
48 -8M0018637 . . . 899
48 -8M0018638 . . . 899
48 -8M0018639 . . . 899
48 -8M0018640 . . . 899
48 -8M0018649 . . . 909
48 -8M0018650 . . . 909
48 -8M0018651 . . . 909
48 -8M0018652 . . . 909
48 -8M0018653 . . . 909
48 -8M0018654 . . . 909
48 -8M0018655 . . . 909
48 -8M0018656 . . . 909
48 -8M0018657 . . . 909
48 -8M0018658 . . . 909
48 -8M0018659 . . . 910
48 -8M0018660 . . . 910
48 -8M0018661 . . . 910
48 -8M0018662 . . . 910
48 -8M0018663 . . . 910
48 -8M0018664 . . . 910
48 -8M0018665 . . . 910
48 -8M0018666 . . . 910
48 -8M0018667 . . . 910
48 -8M0018668 . . . 910
48 -8M0018669 . . . 910
48 -8M0018670 . . . 910
48 -8M0018679 . . . 909
48 -8M0018680 . . . 909
48 -8M0018681 . . . 909
48 -8M0018682 . . . 909
48 -8M0018683 . . . 909
48 -8M0018684 . . . 909
48 -8M0018685 . . . 909
48 -8M0018686 . . . 909
48 -8M0018687 . . . 909
48 -8M0018688 . . . 909
48 -8M0018689 . . . 910
48 -8M0018690 . . . 910
48 -8M0018691 . . . 910
48 -8M0018692 . . . 910
48 -8M0018693 . . . 910
48 -8M0018694 . . . 910
48 -8M0018695 . . . 910
48 -8M0018696 . . . 910
48 -8M0018697 . . . 910
48 -8M0018698 . . . 910
48 -8M0018699 . . . 910
48 -8M0018700 . . . 910
48 -8M0018709 . . . 909
48 -8M0018710 . . . 909
48 -8M0018711 . . . 909
48 -8M0018712 . . . 909
48 -8M0018713 . . . 909
48 -8M0018714 . . . 909

48 -8M0018715 . . . 909
48 -8M0018716 . . . 909
48 -8M0018717 . . . 909
48 -8M0018718 . . . 909
48 -8M0018719 . . . 910
48 -8M0018720 . . . 910
48 -8M0018721 . . . 910
48 -8M0018722 . . . 910
48 -8M0018723 . . . 910
48 -8M0018724 . . . 910
48 -8M0018725 . . . 910
48 -8M0018726 . . . 910
48 -8M0018727 . . . 910
48 -8M0018728 . . . 910
48 -8M0018729 . . . 910
48 -8M0018730 . . . 910
48 -8M0018739 . . . 909
48 -8M0018740 . . . 909
48 -8M0018741 . . . 909
48 -8M0018742 . . . 909
48 -8M0018743 . . . 909
48 -8M0018744 . . . 909
48 -8M0018745 . . . 909
48 -8M0018746 . . . 909
48 -8M0018747 . . . 909
48 -8M0018748 . . . 909
48 -8M0018749 . . . 910
48 -8M0018750 . . . 910
48 -8M0018751 . . . 910
48 -8M0018752 . . . 910
48 -8M0018753 . . . 910
48 -8M0018754 . . . 910
48 -8M0018755 . . . 910
48 -8M0018756 . . . 910
48 -8M0018757 . . . 910
48 -8M0018758 . . . 910
48 -8M0018759 . . . 910
48 -8M0018760 . . . 910
48 -8M0018769 . . . 909
48 -8M0018770 . . . 909
48 -8M0018771 . . . 909
48 -8M0018772 . . . 909
48 -8M0018773 . . . 909
48 -8M0018774 . . . 909
48 -8M0018775 . . . 909
48 -8M0018776 . . . 909
48 -8M0018777 . . . 909
48 -8M0018778 . . . 909
48 -8M0018779 . . . 910
48 -8M0018780 . . . 910
48 -8M0018781 . . . 910
48 -8M0018782 . . . 910
48 -8M0018783 . . . 910
48 -8M0018784 . . . 910
48 -8M0018785 . . . 910
48 -8M0018786 . . . 910
48 -8M0018787 . . . 910
48 -8M0018788 . . . 910
48 -8M0018789 . . . 910
48 -8M0018790 . . . 910
48 -8M0018799 . . . 909
48 -8M0018800 . . . 909
48 -8M0018801 . . . 909
48 -8M0018802 . . . 909
48 -8M0018803 . . . 909
48 -8M0018804 . . . 909
48 -8M0018805 . . . 909
48 -8M0018806 . . . 909
48 -8M0018807 . . . 909
48 -8M0018808 . . . 909
48 -8M0018809 . . . 910
48 -8M0018810 . . . 910
48 -8M0018811 . . . 910
48 -8M0018812 . . . 910
48 -8M0018813 . . . 910
48 -8M0018814 . . . 910
48 -8M0018815 . . . 910
48 -8M0018816 . . . 910
48 -8M0018817 . . . 910
48 -8M0018818 . . . 910
48 -8M0018819 . . . 910
48 -8M0018820 . . . 910
48 -8M0018829 . . . 909
48 -8M0018830 . . . 909
48 -8M0018831 . . . 909
48 -8M0018832 . . . 909
48 -8M0018833 . . . 909
48 -8M0018834 . . . 909
48 -8M0018835 . . . 909
48 -8M0018836 . . . 909
48 -8M0018837 . . . 909
48 -8M0018838 . . . 909
48 -8M0018839 . . . 910
48 -8M0018840 . . . 910
48 -8M0018841 . . . 910
48 -8M0018842 . . . 910
48 -8M0018843 . . . 910
48 -8M0018844 . . . 910
48 -8M0018845 . . . 910
48 -8M0018846 . . . 910
48 -8M0018847 . . . 910
48 -8M0018848 . . . 910
48 -8M0018849 . . . 910
48 -8M0018850 . . . 910
48 -8M0018859 . . . 909
48 -8M0018860 . . . 909
48 -8M0018861 . . . 909
48 -8M0018862 . . . 909
48 -8M0018863 . . . 909
48 -8M0018864 . . . 909

48 -8M0018865 . . . 909
48 -8M0018866 . . . 909
48 -8M0018867 . . . 909
48 -8M0018868 . . . 909
48 -8M0018869 . . . 910
48 -8M0018870 . . . 910
48 -8M0018871 . . . 910
48 -8M0018872 . . . 910
48 -8M0018873 . . . 910
48 -8M0018874 . . . 910
48 -8M0018875 . . . 910
48 -8M0018876 . . . 910
48 -8M0018877 . . . 910
48 -8M0018878 . . . 910
48 -8M0018879 . . . 910
48 -8M0018880 . . . 910
48 -8M0018889 . . . 909
48 -8M0018890 . . . 909
48 -8M0018891 . . . 909
48 -8M0018892 . . . 909
48 -8M0018893 . . . 909
48 -8M0018894 . . . 909
48 -8M0018895 . . . 909
48 -8M0018896 . . . 909
48 -8M0018897 . . . 909
48 -8M0018898 . . . 909
48 -8M0018899 . . . 910
48 -8M0018900 . . . 910
48 -8M0018901 . . . 910
48 -8M0018902 . . . 910
48 -8M0018903 . . . 910
48 -8M0018904 . . . 910
48 -8M0018905 . . . 910
48 -8M0018906 . . . 910
48 -8M0018907 . . . 910
48 -8M0018908 . . . 910
48 -8M0018909 . . . 910
48 -8M0018910 . . . 910
48 -8M0018919 . . . 909
48 -8M0018920 . . . 909
48 -8M0018921 . . . 909
48 -8M0018922 . . . 909
48 -8M0018923 . . . 909
48 -8M0018924 . . . 909
48 -8M0018925 . . . 909
48 -8M0018926 . . . 909
48 -8M0018927 . . . 910
48 -8M0018928 . . . 910
48 -8M0018929 . . . 910
48 -8M0018930 . . . 910
48 -8M0018931 . . . 910
48 -8M0018932 . . . 910
48 -8M0018933 . . . 910
48 -8M0018934 . . . 910
48 -8M0018935 . . . 910
48 -8M0018936 . . . 910
48 -8M0018937 . . . 910
48 -8M0018938 . . . 910
48 -8M0018939 . . . 910
48 -8M0018940 . . . 910
48 -8M0018949 . . . 909
48 -8M0018950 . . . 909
48 -8M0018951 . . . 909
48 -8M0018952 . . . 909
48 -8M0018953 . . . 909
48 -8M0018954 . . . 909
48 -8M0018955 . . . 909
48 -8M0018956 . . . 909
48 -8M0018957 . . . 910
48 -8M0018958 . . . 910
48 -8M0018959 . . . 910
48 -8M0018960 . . . 910
48 -8M0018961 . . . 910
48 -8M0018962 . . . 910
48 -8M0018963 . . . 910
48 -8M0018964 . . . 910
48 -8M0018965 . . . 910
48 -8M0018966 . . . 910
48 -8M0018967 . . . 910
48 -8M0018968 . . . 910
48 -8M0018969 . . . 910
48 -8M0018970 . . . 910
48 -8M0018979 . . . 909
48 -8M0018980 . . . 909
48 -8M0018981 . . . 909
48 -8M0018982 . . . 909
48 -8M0018983 . . . 909
48 -8M0018984 . . . 909
48 -8M0018985 . . . 909
48 -8M0018986 . . . 909
48 -8M0018987 . . . 910
48 -8M0018988 . . . 910
48 -8M0018989 . . . 910
48 -8M0018990 . . . 910
48 -8M0018991 . . . 910
48 -8M0018992 . . . 910
48 -8M0018993 . . . 910
48 -8M0018994 . . . 910
48 -8M0018995 . . . 910
48 -8M0018996 . . . 910
48 -8M0018997 . . . 910
48 -8M0018998 . . . 910
48 -8M0018999 . . . 910
48 -8M0019000 . . . 910
48 -8M0019009 . . . 909
48 -8M0019010 . . . 909
48 -8M0019011 . . . 909
48 -8M0019012 . . . 909
48 -8M0019013 . . . 909
48 -8M0019014 . . . 909

48 -8M0019015 909
48 -8M0019016 909
48 -8M0019017 910
48 -8M0019018 910
48 -8M0019019 910
48 -8M0019020 910
48 -8M0019021 910
48 -8M0019022 910
48 -8M0019023 910
48 -8M0019024 910
48 -8M0019025 910
48 -8M0019026 910
48 -8M0019027 910
48 -8M0019028 910
48 -8M0019029 910
48 -8M0019030 910
91 -8M0026088 1030
8M0026098 707
57 -8M0026410 230
10 -8M0028080 65
8M0030272 . . . . . 382, 386, 660
8M0030273 660
8M0030499 518
8M0030501 517
8M0030550 . . . . . 342, 345, 351, 353, 356, 359, 362, 364, 368, 372, 375, 522
8M0030551 522
8M0031424 . . . . . 354, 357, 360, 507
57 -8M0031641 234
8M0032454 . . . . . 422, 451
32 -8M0032520 . . . . . 560, 670
32 -8M0032530 . . . . . 560, 670
32 -8M0032547 . . . . . 560, 670
32 -8M0032630 . . . . . 560, 670
37 -8M0035724 633
91 -8M0036608 212
8M0037021 211
10 -8M0038370 65
32 -8M0038500 . . . . . 74, 344, 348, 363, 367, 370, 374, 378
32 -8M0038563 . . . . . 74, 344, 348, 363, 367, 370, 374, 378, 381, 385
8M0038928 212
48 -8M0040396 . . . . . 803, 809, 810, 820, 821, 821, 822, 823, 835, 837, 857
48 -8M0040397 . . . . . 809, 810, 820, 821, 822, 823, 835, 837, 857
48 -8M0040398 . . . . . 803, 809, 810, 820, 821, 821, 822, 823, 835, 837, 842, 857
48 -8M0040399 . . . . . 809, 810, 820, 821, 822, 823, 835, 837, 842, 857
48 -8M0040400 . . . . . 803, 809, 810, 820, 821, 821, 822, 823, 835, 837, 842, 857
48 -8M0040401 . . . . . 809, 810, 820, 821, 822, 823, 835, 837, 842, 857
48 -8M0040402 . . . . . 803, 809, 810, 820, 821, 821, 822, 823, 835, 837, 842, 857
48 -8M0040403 . . . . . 809, 810, 820, 821, 822, 823, 835, 837, 842, 857
48 -8M0040404 . . . . . 803, 809, 810, 820, 821, 821, 822, 823, 835, 838, 842, 857
48 -8M0040405 . . . . . 809, 810, 820, 821, 822, 823, 835, 838, 842, 857
48 -8M0040406 . . . . . 803, 809, 810, 820, 821, 821, 822, 823, 835, 837, 857
48 -8M0040407 . . . . . 809, 810, 820, 821, 822, 823, 835, 837, 857
48 -8M0040408 . . . . . 803, 809, 810, 820, 821, 821, 822, 823, 835, 837, 857
48 -8M0040409 . . . . . 809, 810, 820, 821, 822, 823, 835, 837, 857
22 -8M0041173 680
8M0041425 . . . . . 359, 388
8M0041428 388
77 -8M0041671 569
77 -8M0041674 569
77 -8M0041718 569
77 -8M0041733 569
77 -8M0041734 569
77 -8M0041757 569
8M0042130 . . . . . 996, 997, 1018
87 -8M0042301 30
12 -8M0042329 997
84 -8M0042976 643
37 -8M0043699 227
37 -8M0043700 227
37 -8M0043701 227
37 -8M0043702 227
37 -8M0043703 228
37 -8M0043705 228
37 -8M0043706 228
37 -8M0043707 228
8M0044687 71
22 -8M0045175 . . . . . 130, 131
57 -8M0045227 242
1200-8M0045691 . . . . . 70, 344, 348, 352, 355, 358, 361, 363, 367, 370, 374, 378
1200-8M0045692 . . . . . 71, 350, 352, 355, 358, 360
84 -8M0045743 646
57 -8M0045986 242
8M0045990 242
33 -8M0046007 . . . . . 120, 122
37 -8M0046011 227
62 -8M0046027 1046
8M0046250 . . . . . 557, 725
8M0046339 . . . . . 585, 632
12 -8M0046466 1022
8M0046481 604
35 -8M0046751 238
32 -8M0046914 . . . . . 382, 386, 666

32 -8M0046915 . . . 666
32 -8M0046916 . . . 666
32 -8M0046917 . . . 666
32 -8M0046918 . . . 666
32 -8M0046919 . . . 666
32 -8M0046920 . . . 666
32 -8M0046921 . . . 666
32 -8M0046922 . . . 666
32 -8M0046923 . . . 666
32 -8M0046924 . . . 666
32 -8M0046925 . . . 666
32 -8M0046926 . . . 666
32 -8M0046927 . . . 666
32 -8M0046928 . . . 382, 666
32 -8M0046929 . . . 666
32 -8M0046930 . . . 666
32 -8M0046931 . . . 386, 666
32 -8M0046932 . . . 666
8M0047148 . . . 997
1200-8M0047598 . . . 71, 350, 352, 355, 358, 360
1200-8M0047599 . . . 350, 352, 355, 358, 360
1200-8M0047603 . . . 352, 355, 358, 361, 364, 367
1200-8M0047607 . . . 352, 355, 358, 361, 363, 367
84 -8M0047753 . . . 559
84 -8M0047754 . . . 559
84 -8M0047755 . . . 559
8M0047848 . . . 242
92 -8M0047920 . . . 314
92 -8M0047921 . . . 315
92 -8M0047922 . . . 316
92 -8M0047930 . . . 275
92 -8M0047931 . . . 275
92 -8M0047932 . . . 276
84 -8M0048040 . . . 604
84 -8M0048043 . . . 604
84 -8M0048044 . . . 604
84 -8M0048045 . . . 604
84 -8M0048046 . . . 604
84 -8M0048047 . . . 604
84 -8M0048048 . . . 604
84 -8M0048049 . . . 604
84 -8M0048054 . . . 604
84 -8M0048055 . . . 604
84 -8M0048056 . . . 604
84 -8M0048057 . . . 604
84 -8M0048058 . . . 604
84 -8M0048059 . . . 604
48 -8M0049063 . . . 884
48 -8M0049064 . . . 884
48 -8M0049065 . . . 884
48 -8M0049066 . . . 884
48 -8M0049067 . . . 884
48 -8M0049068 . . . 884
48 -8M0049069 . . . 884
48 -8M0049070 . . . 884
48 -8M0049071 . . . 884
48 -8M0049072 . . . 884
48 -8M0049073 . . . 884
48 -8M0049074 . . . 884
48 -8M0049075 . . . 885
48 -8M0049076 . . . 885
48 -8M0049077 . . . 885
48 -8M0049078 . . . 885
48 -8M0049079 . . . 885
48 -8M0049080 . . . 885
48 -8M0049081 . . . 885
48 -8M0049082 . . . 885
48 -8M0049083 . . . 885
48 -8M0049084 . . . 885
48 -8M0049085 . . . 885
48 -8M0049086 . . . 885
48 -8M0049087 . . . 885
48 -8M0049088 . . . 885
48 -8M0049089 . . . 885
48 -8M0049090 . . . 885
48 -8M0049091 . . . 885
48 -8M0049092 . . . 885
48 -8M0049093 . . . 884
48 -8M0049094 . . . 884
48 -8M0049095 . . . 884
48 -8M0049096 . . . 884
48 -8M0049097 . . . 884
48 -8M0049098 . . . 884
48 -8M0049099 . . . 884
48 -8M0049100 . . . 884
48 -8M0049101 . . . 884
48 -8M0049102 . . . 884
48 -8M0049103 . . . 884
48 -8M0049104 . . . 884
48 -8M0049105 . . . 885
48 -8M0049106 . . . 885
48 -8M0049107 . . . 885
48 -8M0049108 . . . 885
48 -8M0049109 . . . 885
48 -8M0049110 . . . 885
48 -8M0049111 . . . 885
48 -8M0049112 . . . 885
48 -8M0049113 . . . 885
48 -8M0049114 . . . 885
48 -8M0049115 . . . 885
48 -8M0049116 . . . 885
48 -8M0049117 . . . 885
48 -8M0049118 . . . 885
48 -8M0049119 . . . 885
48 -8M0049120 . . . 885
48 -8M0049121 . . . 885
48 -8M0049122 . . . 885
48 -8M0049123 . . . 884
48 -8M0049124 . . . 884
48 -8M0049125 . . . 884

48 -8M0049126 . . . 884
48 -8M0049127 . . . 884
48 -8M0049128 . . . 884
48 -8M0049129 . . . 884
48 -8M0049130 . . . 884
48 -8M0049131 . . . 884
48 -8M0049132 . . . 884
48 -8M0049133 . . . 884
48 -8M0049134 . . . 884
48 -8M0049135 . . . 885
48 -8M0049136 . . . 885
48 -8M0049137 . . . 885
48 -8M0049138 . . . 885
48 -8M0049139 . . . 885
48 -8M0049140 . . . 885
48 -8M0049141 . . . 885
48 -8M0049142 . . . 885
48 -8M0049143 . . . 885
48 -8M0049144 . . . 885
48 -8M0049145 . . . 885
48 -8M0049146 . . . 885
48 -8M0049147 . . . 885
48 -8M0049148 . . . 885
48 -8M0049149 . . . 885
48 -8M0049150 . . . 885
48 -8M0049151 . . . 885
48 -8M0049152 . . . 885
48 -8M0049153 . . . 884
48 -8M0049154 . . . 884
48 -8M0049155 . . . 884
48 -8M0049156 . . . 884
48 -8M0049157 . . . 884
48 -8M0049158 . . . 884
48 -8M0049159 . . . 884
48 -8M0049160 . . . 884
48 -8M0049161 . . . 884
48 -8M0049162 . . . 884
48 -8M0049163 . . . 884
48 -8M0049164 . . . 884
48 -8M0049165 . . . 885
48 -8M0049166 . . . 885
48 -8M0049167 . . . 885
48 -8M0049168 . . . 885
48 -8M0049169 . . . 885
48 -8M0049170 . . . 885
48 -8M0049171 . . . 885
48 -8M0049172 . . . 885
48 -8M0049173 . . . 885
48 -8M0049174 . . . 885
48 -8M0049175 . . . 885
48 -8M0049176 . . . 885
48 -8M0049177 . . . 885
48 -8M0049178 . . . 885
48 -8M0049179 . . . 885
48 -8M0049180 . . . 885
48 -8M0049181 . . . 885
48 -8M0049182 . . . 885
48 -8M0049183 . . . 884
48 -8M0049184 . . . 884
48 -8M0049185 . . . 884
48 -8M0049186 . . . 884
48 -8M0049187 . . . 884
48 -8M0049188 . . . 884
48 -8M0049189 . . . 884
48 -8M0049190 . . . 884
48 -8M0049191 . . . 884
48 -8M0049192 . . . 884
48 -8M0049193 . . . 885
48 -8M0049194 . . . 885
48 -8M0049195 . . . 885
48 -8M0049196 . . . 885
48 -8M0049197 . . . 885
48 -8M0049198 . . . 885
48 -8M0049199 . . . 885
48 -8M0049200 . . . 885
48 -8M0049201 . . . 885
48 -8M0049202 . . . 885
48 -8M0049203 . . . 885
48 -8M0049204 . . . 885
48 -8M0049205 . . . 885
48 -8M0049206 . . . 885
48 -8M0049207 . . . 885
48 -8M0049208 . . . 885
48 -8M0049209 . . . 885
48 -8M0049210 . . . 885
48 -8M0049211 . . . 885
48 -8M0049212 . . . 885
48 -8M0049213 . . . 884
48 -8M0049214 . . . 884
48 -8M0049215 . . . 884
48 -8M0049216 . . . 884
48 -8M0049217 . . . 884
48 -8M0049218 . . . 884
48 -8M0049219 . . . 884
48 -8M0049220 . . . 884
48 -8M0049221 . . . 884
48 -8M0049222 . . . 884
48 -8M0049223 . . . 885
48 -8M0049224 . . . 885
48 -8M0049225 . . . 885
48 -8M0049226 . . . 885
48 -8M0049227 . . . 885
48 -8M0049228 . . . 885
48 -8M0049229 . . . 885
48 -8M0049230 . . . 885
48 -8M0049231 . . . 885
48 -8M0049232 . . . 885
48 -8M0049233 . . . 885
48 -8M0049234 . . . 885
48 -8M0049235 . . . 885

48 -8M0049236 . . . 885
48 -8M0049237 . . . 885
48 -8M0049238 . . . 885
48 -8M0049239 . . . 885
48 -8M0049240 . . . 885
48 -8M0049241 . . . 885
48 -8M0049242 . . . 885
48 -8M0049243 . . . 884
48 -8M0049244 . . . 884
48 -8M0049245 . . . 884
48 -8M0049246 . . . 884
48 -8M0049247 . . . 884
48 -8M0049248 . . . 884
48 -8M0049249 . . . 884
48 -8M0049250 . . . 884
48 -8M0049251 . . . 884
48 -8M0049252 . . . 884
48 -8M0049253 . . . 885
48 -8M0049254 . . . 885
48 -8M0049255 . . . 885
48 -8M0049256 . . . 885
48 -8M0049257 . . . 885
48 -8M0049258 . . . 885
48 -8M0049259 . . . 885
48 -8M0049260 . . . 885
48 -8M0049261 . . . 885
48 -8M0049262 . . . 885
48 -8M0049263 . . . 885
48 -8M0049264 . . . 885
48 -8M0049265 . . . 885
48 -8M0049266 . . . 885
48 -8M0049267 . . . 885
48 -8M0049268 . . . 885
48 -8M0049269 . . . 885
48 -8M0049270 . . . 885
48 -8M0049271 . . . 885
48 -8M0049272 . . . 885
48 -8M0049273 . . . 884
48 -8M0049274 . . . 884
48 -8M0049275 . . . 884
48 -8M0049276 . . . 884
48 -8M0049277 . . . 884
48 -8M0049278 . . . 884
48 -8M0049279 . . . 884
48 -8M0049280 . . . 884
48 -8M0049281 . . . 884
48 -8M0049282 . . . 884
48 -8M0049283 . . . 885
48 -8M0049284 . . . 885
48 -8M0049285 . . . 885
48 -8M0049286 . . . 885
48 -8M0049287 . . . 885
48 -8M0049288 . . . 885
48 -8M0049289 . . . 885
48 -8M0049290 . . . 885
48 -8M0049291 . . . 885
48 -8M0049292 . . . 885
48 -8M0049293 . . . 885
48 -8M0049294 . . . 885
48 -8M0049295 . . . 885
48 -8M0049296 . . . 885
48 -8M0049297 . . . 885
48 -8M0049298 . . . 885
48 -8M0049299 . . . 885
48 -8M0049300 . . . 885
48 -8M0049301 . . . 885
48 -8M0049302 . . . 885
48 -8M0049303 . . . 884
48 -8M0049304 . . . 884
48 -8M0049305 . . . 884
48 -8M0049306 . . . 884
48 -8M0049307 . . . 884
48 -8M0049308 . . . 884
48 -8M0049309 . . . 884
48 -8M0049310 . . . 884
48 -8M0049311 . . . 884
48 -8M0049312 . . . 884
48 -8M0049313 . . . 885
48 -8M0049314 . . . 885
48 -8M0049315 . . . 885
48 -8M0049316 . . . 885
48 -8M0049317 . . . 885
48 -8M0049318 . . . 885
48 -8M0049319 . . . 885
48 -8M0049320 . . . 885
48 -8M0049321 . . . 885
48 -8M0049322 . . . 885
48 -8M0049323 . . . 885
48 -8M0049324 . . . 885
48 -8M0049325 . . . 885
48 -8M0049326 . . . 885
48 -8M0049327 . . . 885
48 -8M0049328 . . . 885
48 -8M0049329 . . . 885
48 -8M0049330 . . . 885
48 -8M0049331 . . . 885
48 -8M0049332 . . . 885
48 -8M0049333 . . . 891
48 -8M0049334 . . . 891
48 -8M0049335 . . . 891
48 -8M0049336 . . . 891
48 -8M0049337 . . . 891
48 -8M0049338 . . . 891
48 -8M0049339 . . . 891
48 -8M0049340 . . . 891
48 -8M0049341 . . . 891
48 -8M0049342 . . . 891
48 -8M0049343 . . . 892
48 -8M0049344 . . . 892
48 -8M0049345 . . . 892

48 -8M0049346 . . . 892
48 -8M0049347 . . . 892
48 -8M0049348 . . . 892
48 -8M0049349 . . . 892
48 -8M0049350 . . . 892
48 -8M0049351 . . . 892
48 -8M0049352 . . . 892
48 -8M0049353 . . . 892
48 -8M0049354 . . . 892
48 -8M0049355 . . . 891
48 -8M0049356 . . . 891
48 -8M0049357 . . . 891
48 -8M0049358 . . . 891
48 -8M0049359 . . . 891
48 -8M0049360 . . . 891
48 -8M0049361 . . . 891
48 -8M0049362 . . . 891
48 -8M0049363 . . . 892
48 -8M0049364 . . . 892
48 -8M0049365 . . . 892
48 -8M0049366 . . . 892
48 -8M0049367 . . . 892
48 -8M0049368 . . . 892
48 -8M0049369 . . . 892
48 -8M0049370 . . . 892
48 -8M0049371 . . . 892
48 -8M0049372 . . . 892
48 -8M0049373 . . . 892
48 -8M0049374 . . . 892
48 -8M0049375 . . . 892
48 -8M0049376 . . . 892
48 -8M0049377 . . . 891
48 -8M0049378 . . . 891
48 -8M0049379 . . . 891
48 -8M0049380 . . . 891
48 -8M0049381 . . . 891
48 -8M0049382 . . . 891
48 -8M0049383 . . . 891
48 -8M0049384 . . . 891
48 -8M0049385 . . . 892
48 -8M0049386 . . . 892
48 -8M0049387 . . . 892
48 -8M0049388 . . . 892
48 -8M0049389 . . . 892
48 -8M0049390 . . . 892
48 -8M0049391 . . . 892
48 -8M0049392 . . . 892
48 -8M0049393 . . . 892
48 -8M0049394 . . . 892
48 -8M0049395 . . . 892
48 -8M0049396 . . . 892
48 -8M0049397 . . . 892
48 -8M0049398 . . . 892
48 -8M0049399 . . . 891
48 -8M0049400 . . . 891
48 -8M0049401 . . . 891
48 -8M0049402 . . . 891
48 -8M0049403 . . . 891
48 -8M0049404 . . . 891
48 -8M0049405 . . . 891
48 -8M0049406 . . . 891
48 -8M0049407 . . . 892
48 -8M0049408 . . . 892
48 -8M0049409 . . . 892
48 -8M0049410 . . . 892
48 -8M0049411 . . . 892
48 -8M0049412 . . . 892
48 -8M0049413 . . . 892
48 -8M0049414 . . . 892
48 -8M0049415 . . . 892
48 -8M0049416 . . . 892
48 -8M0049417 . . . 892
48 -8M0049418 . . . 892
48 -8M0049419 . . . 892
48 -8M0049420 . . . 892
48 -8M0049421 . . . 891
48 -8M0049422 . . . 891
48 -8M0049423 . . . 891
48 -8M0049424 . . . 891
48 -8M0049425 . . . 891
48 -8M0049426 . . . 891
48 -8M0049427 . . . 891
48 -8M0049428 . . . 891
48 -8M0049429 . . . 892
48 -8M0049430 . . . 892
48 -8M0049431 . . . 892
48 -8M0049432 . . . 892
48 -8M0049433 . . . 892
48 -8M0049434 . . . 892
48 -8M0049435 . . . 892
48 -8M0049436 . . . 892
48 -8M0049437 . . . 892
48 -8M0049438 . . . 892
48 -8M0049439 . . . 892
48 -8M0049440 . . . 892
48 -8M0049441 . . . 892
48 -8M0049442 . . . 892
48 -8M0049443 . . . 891
48 -8M0049444 . . . 891
48 -8M0049445 . . . 891
48 -8M0049446 . . . 891
48 -8M0049447 . . . 891
48 -8M0049448 . . . 891
48 -8M0049449 . . . 891
48 -8M0049450 . . . 891
48 -8M0049451 . . . 892
48 -8M0049452 . . . 892
48 -8M0049453 . . . 892
48 -8M0049454 . . . 892
48 -8M0049455 . . . 892

48 -8M0049456 . . . 892
48 -8M0049457 . . . 892
48 -8M0049458 . . . 892
48 -8M0049459 . . . 892
48 -8M0049460 . . . 892
48 -8M0049461 . . . 892
48 -8M0049462 . . . 892
48 -8M0049463 . . . 892
48 -8M0049464 . . . 892
48 -8M0049465 . . . 891
48 -8M0049466 . . . 891
48 -8M0049467 . . . 891
48 -8M0049468 . . . 891
48 -8M0049469 . . . 891
48 -8M0049470 . . . 891
48 -8M0049471 . . . 891
48 -8M0049472 . . . 891
48 -8M0049473 . . . 892
48 -8M0049474 . . . 892
48 -8M0049475 . . . 892
48 -8M0049476 . . . 892
48 -8M0049477 . . . 892
48 -8M0049478 . . . 892
48 -8M0049479 . . . 892
48 -8M0049480 . . . 892
48 -8M0049481 . . . 892
48 -8M0049482 . . . 892
48 -8M0049483 . . . 892
48 -8M0049484 . . . 892
48 -8M0049485 . . . 892
48 -8M0049486 . . . 892
48 -8M0049487 . . . 891
48 -8M0049488 . . . 891
48 -8M0049489 . . . 891
48 -8M0049490 . . . 891
48 -8M0049491 . . . 891
48 -8M0049492 . . . 891
48 -8M0049493 . . . 891
48 -8M0049494 . . . 891
48 -8M0049495 . . . 892
48 -8M0049496 . . . 892
48 -8M0049497 . . . 892
48 -8M0049498 . . . 892
48 -8M0049499 . . . 892
48 -8M0049500 . . . 892
48 -8M0049501 . . . 892
48 -8M0049502 . . . 892
48 -8M0049503 . . . 892
48 -8M0049504 . . . 892
48 -8M0049505 . . . 892
48 -8M0049506 . . . 892
48 -8M0049507 . . . 892
48 -8M0049508 . . . 892
48 -8M0049509 . . . 891
48 -8M0049510 . . . 891
48 -8M0049511 . . . 891
48 -8M0049512 . . . 891
48 -8M0049513 . . . 891
48 -8M0049514 . . . 891
48 -8M0049515 . . . 891
48 -8M0049516 . . . 891
48 -8M0049517 . . . 892
48 -8M0049518 . . . 892
48 -8M0049519 . . . 892
48 -8M0049520 . . . 892
48 -8M0049521 . . . 892
48 -8M0049522 . . . 892
48 -8M0049523 . . . 892
48 -8M0049524 . . . 892
48 -8M0049525 . . . 892
48 -8M0049526 . . . 892
48 -8M0049527 . . . 892
48 -8M0049528 . . . 892
48 -8M0049529 . . . 892
48 -8M0049530 . . . 892
48 -8M0049531 . . . 895
48 -8M0049532 . . . 895
48 -8M0049533 . . . 895
48 -8M0049534 . . . 895
48 -8M0049535 . . . 895
48 -8M0049536 . . . 895
48 -8M0049537 . . . 895
48 -8M0049538 . . . 895
48 -8M0049539 . . . 895
48 -8M0049540 . . . 895
48 -8M0049541 . . . 895
48 -8M0049542 . . . 895
48 -8M0049543 . . . 896
48 -8M0049544 . . . 896
48 -8M0049545 . . . 896
48 -8M0049546 . . . 896
48 -8M0049547 . . . 896
48 -8M0049548 . . . 896
48 -8M0049549 . . . 896
48 -8M0049550 . . . 896
48 -8M0049551 . . . 896
48 -8M0049552 . . . 896
48 -8M0049553 . . . 895
48 -8M0049554 . . . 895
48 -8M0049555 . . . 895
48 -8M0049556 . . . 895
48 -8M0049557 . . . 895
48 -8M0049558 . . . 895
48 -8M0049559 . . . 895
48 -8M0049560 . . . 895
48 -8M0049561 . . . 895
48 -8M0049562 . . . 895
48 -8M0049563 . . . 895
48 -8M0049564 . . . 895
48 -8M0049565 . . . 896

48 -8M0049566 . . . 896
48 -8M0049567 . . . 896
48 -8M0049568 . . . 896
48 -8M0049569 . . . 896
48 -8M0049570 . . . 896
48 -8M0049571 . . . 896
48 -8M0049572 . . . 896
48 -8M0049573 . . . 896
48 -8M0049574 . . . 896
48 -8M0049575 . . . 895
48 -8M0049576 . . . 895
48 -8M0049577 . . . 895
48 -8M0049578 . . . 895
48 -8M0049579 . . . 895
48 -8M0049580 . . . 895
48 -8M0049581 . . . 895
48 -8M0049582 . . . 895
48 -8M0049583 . . . 895
48 -8M0049584 . . . 895
48 -8M0049585 . . . 895
48 -8M0049586 . . . 895
48 -8M0049587 . . . 896
48 -8M0049588 . . . 896
48 -8M0049589 . . . 896
48 -8M0049590 . . . 896
48 -8M0049591 . . . 896
48 -8M0049592 . . . 896
48 -8M0049593 . . . 896
48 -8M0049594 . . . 896
48 -8M0049595 . . . 896
48 -8M0049596 . . . 896
48 -8M0049597 . . . 895
48 -8M0049598 . . . 895
48 -8M0049599 . . . 895
48 -8M0049600 . . . 895
48 -8M0049601 . . . 895
48 -8M0049602 . . . 895
48 -8M0049603 . . . 895
48 -8M0049604 . . . 895
48 -8M0049605 . . . 895
48 -8M0049606 . . . 895
48 -8M0049607 . . . 895
48 -8M0049608 . . . 895
48 -8M0049609 . . . 896
48 -8M0049610 . . . 896
48 -8M0049611 . . . 896
48 -8M0049612 . . . 896
48 -8M0049613 . . . 896
48 -8M0049614 . . . 896
48 -8M0049615 . . . 896
48 -8M0049616 . . . 896
48 -8M0049617 . . . 896
48 -8M0049618 . . . 896
48 -8M0049619 . . . 895
48 -8M0049620 . . . 895
48 -8M0049621 . . . 895
48 -8M0049622 . . . 895
48 -8M0049623 . . . 895
48 -8M0049624 . . . 895
48 -8M0049625 . . . 895
48 -8M0049626 . . . 895
48 -8M0049627 . . . 895
48 -8M0049628 . . . 895
48 -8M0049629 . . . 896
48 -8M0049630 . . . 896
48 -8M0049631 . . . 896
48 -8M0049632 . . . 896
48 -8M0049633 . . . 896
48 -8M0049634 . . . 896
48 -8M0049635 . . . 896
48 -8M0049636 . . . 896
48 -8M0049637 . . . 896
48 -8M0049638 . . . 896
48 -8M0049639 . . . 896
48 -8M0049640 . . . 896
48 -8M0049641 . . . 895
48 -8M0049642 . . . 895
48 -8M0049643 . . . 895
48 -8M0049644 . . . 895
48 -8M0049645 . . . 895
48 -8M0049646 . . . 895
48 -8M0049647 . . . 895
48 -8M0049648 . . . 895
48 -8M0049649 . . . 895
48 -8M0049650 . . . 895
48 -8M0049651 . . . 896
48 -8M0049652 . . . 896
48 -8M0049653 . . . 896
48 -8M0049654 . . . 896
48 -8M0049655 . . . 896
48 -8M0049656 . . . 896
48 -8M0049657 . . . 896
48 -8M0049658 . . . 896
48 -8M0049659 . . . 896
48 -8M0049660 . . . 896
48 -8M0049661 . . . 896
48 -8M0049662 . . . 896
48 -8M0049663 . . . 895
48 -8M0049664 . . . 895
48 -8M0049665 . . . 895
48 -8M0049666 . . . 895
48 -8M0049667 . . . 895
48 -8M0049668 . . . 895
48 -8M0049669 . . . 895
48 -8M0049670 . . . 895
48 -8M0049671 . . . 895
48 -8M0049672 . . . 895
48 -8M0049673 . . . 896
48 -8M0049674 . . . 896
48 -8M0049675 . . . 896

48 -8M0049676 . . . 896
48 -8M0049677 . . . 896
48 -8M0049678 . . . 896
48 -8M0049679 . . . 896
48 -8M0049680 . . . 896
48 -8M0049681 . . . 896
48 -8M0049682 . . . 896
48 -8M0049683 . . . 896
48 -8M0049684 . . . 896
48 -8M0049685 . . . 895
48 -8M0049686 . . . 895
48 -8M0049687 . . . 895
48 -8M0049688 . . . 895
48 -8M0049689 . . . 895
48 -8M0049690 . . . 895
48 -8M0049691 . . . 895
48 -8M0049692 . . . 895
48 -8M0049693 . . . 895
48 -8M0049694 . . . 895
48 -8M0049695 . . . 896
48 -8M0049696 . . . 896
48 -8M0049697 . . . 896
48 -8M0049698 . . . 896
48 -8M0049699 . . . 896
48 -8M0049700 . . . 896
48 -8M0049701 . . . 896
48 -8M0049702 . . . 896
48 -8M0049703 . . . 896
48 -8M0049704 . . . 896
48 -8M0049705 . . . 896
48 -8M0049706 . . . 896
48 -8M0049707 . . . 895
48 -8M0049708 . . . 895
48 -8M0049709 . . . 895
48 -8M0049710 . . . 895
48 -8M0049711 . . . 895
48 -8M0049712 . . . 895
48 -8M0049713 . . . 895
48 -8M0049714 . . . 895
48 -8M0049715 . . . 895
48 -8M0049716 . . . 895
48 -8M0049717 . . . 896
48 -8M0049718 . . . 896
48 -8M0049719 . . . 896
48 -8M0049720 . . . 896
48 -8M0049721 . . . 896
48 -8M0049722 . . . 896
48 -8M0049723 . . . 896
48 -8M0049724 . . . 896
48 -8M0049725 . . . 896
48 -8M0049726 . . . 896
48 -8M0049727 . . . 896
48 -8M0049728 . . . 896
8M0049841 . . . 162
8M0050097 . . . 349, 379, 382, 676
8M0050098 . . . 344, 371, 375, 675
8M0050099 . . . 344, 371, 375, 675
8M0050264 . . . 573
8M0050396 . . . 200
79 -8M0050399 . . . 343, 345, 350, 351, 354, 357, 363, 366, 376, 389, 507
62 -8M0050413 . . . 1059
37 -8M0050503 . . . 198
94 -8M0050531 . . . 249
35 -8M0050833 . . . 210
8M0050993 . . . 203
8M0051060 . . . 43, 51, 358
8M0051061 . . . 44, 51, 361
8M0051062 . . . 44, 51, 361
32 -8M0051174 . . . 150, 155, 161
32 -8M0051175 . . . 150, 155, 161
32 -8M0051176 . . . 151, 155, 161
8M0051178 . . . 158, 162
8M0051522 . . . 200
8M0052100 . . . 95, 262, 340
8M0052290 . . . 508
8M0052291 . . . 509
8M0052292 . . . 379, 509
8M0052484 . . . 350, 544, 715
8M0052485 . . . 544, 715
8M0052486 . . . 544, 715
8M0052487 . . . 544, 715
8M0052488 . . . 544, 715
8M0052489 . . . 544, 715
8M0052490 . . . 544, 715
8M0052491 . . . 544, 715
8M0052492 . . . 544, 715
8M0052493 . . . 544, 715
8M0052494 . . . 544, 715
8M0052495 . . . 544, 715
8M0052496 . . . 544, 715
8M0052497 . . . 544, 715
8M0052498 . . . 544, 715
8M0052499 . . . 545, 716
8M0052500 . . . 545, 716
8M0052501 . . . 545, 716
8M0052502 . . . 545, 716
8M0052503 . . . 545, 716
8M0052504 . . . 545, 716
8M0052505 . . . 545, 716
8M0052506 . . . 545, 716
8M0052507 . . . 545, 716
8M0052508 . . . 545, 716
8M0052509 . . . 350, 545, 716
8M0052605 . . . 226
8M0052656 . . . 226
8M0052657 . . . 227
84 -8M0052672 . . . 577, 581
8M0052676 . . . 547, 718
8M0052677 . . . 548, 718

8M0052678 . . . . . 548, 719
8M0052679 . . . . . 548, 719
8M0052680 . . . . . 548, 719
8M0052681 . . . . . 548, 719
8M0052682 . . . . . 548, 719
8M0052683 . . . . . 548, 719
8M0052684 . . . . . 548, 719
8M0052685 . . . . . 548, 719
8M0052686 . . . . . 548, 719
8M0052687 . . . . . 548, 719
8M0052688 . . . . . 548, 719
8M0052689 . . . . . 548, 719
8M0052690 . . . . . 548, 719
8M0052691 . . . . . 548, 719
8M0052692 . . . . . 548, 719
8M0052693 . . . . . 549, 719
8M0052694 . . . . . 549, 720
8M0052695 . . . . . 549, 720
8M0052696 . . . . . 549, 720
8M0052697 . . . . . 549, 720
8M0052698 . . . . . 549, 720
8M0052699 . . . . . 549, 720
8M0052700 . . . . . 549, 720
8M0052701 . . . . . 549, 720
8M0052735 163
8M0052737 164
8M0052739 163
8M0052742 164
79 -8M0052842 417
79 -8M0052843 417
79 -8M0052844 418
79 -8M0052845 418
79 -8M0052846 418
79 -8M0052847 418
79 -8M0052848 418
79 -8M0052849 419
79 -8M0052850 419
79 -8M0052851 419
79 -8M0052852 420
79 -8M0052853 423
79 -8M0052854 424
79 -8M0052855 427
79 -8M0052856 427
79 -8M0052857 427
79 -8M0052858 427
79 -8M0052863 414
79 -8M0052864 414
79 -8M0052865 415
79 -8M0052866 415
79 -8M0052867 415
79 -8M0052868 415
79 -8M0052869 416
79 -8M0052870 416
79 -8M0052871 416
79 -8M0052872 416
79 -8M0052873 417
79 -8M0052874 423
79 -8M0052875 423
79 -8M0052876 426
79 -8M0052877 425
79 -8M0052878 425
79 -8M0052879 426
8M0052921 93
8M0052924 . . . . . 93, 386, 1027
8M0052975 74
8M0052976 74
84 -8M0052988 510
8M0053074 1009
84 -8M0053083 604
84 -8M0053250 510
32 -8M0053474 . . . . . 345, 349, 371, 375, 379, 382, 677, 702
32 -8M0053475 677
32 -8M0053476 677
32 -8M0053477 677
32 -8M0053478 677
32 -8M0053479 677
32 -8M0053480 677
32 -8M0053481 677
32 -8M0053482 677
32 -8M0053483 . . . . . 677, 701
32 -8M0053484 . . . . . 678, 701
32 -8M0053485 . . . . . 678, 702
32 -8M0053486 . . . . . 678, 702
32 -8M0053487 . . . . . 678, 702
32 -8M0053488 . . . . . 678, 702
32 -8M0053489 . . . . . 678, 702
32 -8M0053490 678
32 -8M0053491 678
32 -8M0053492 678
8M0053532 . . . . . 470, 474, 479, 483, 487, 491, 494
8M0053636 525
92 -8M0053662 . . . . . 292, 295
92 -8M0053664 . . . . . 292, 295
900 -8M0053744 199
22 -8M0053764 . . . . . 129, 131
8M0054004 162
8M0054006 162
67 -8M0054121 635
67 -8M0054122 634
67 -8M0054123 634
84 -8M0054183 510
84 -8M0054185 510
84 -8M0054186 510
84 -8M0054187 510
86 -8M0054244 . . . . . 585, 632
8M0054313 . . . . . 344, 348, 350, 352, 355, 358, 361, 364, 367
8M0054314 . . . . . 344, 348, 350, 352, 355, 358, 361, 364, 367

32 -8M0054326 . . . . . 344, 348
32 -8M0054331 . . . . . 344, 348
79 -8M0054360 420
79 -8M0054374 417
1200-8M0054600 . . . . . 70, 344, 348, 352, 355, 358, 360, 363, 367, 370, 374, 378
32 -8M0054713 71
32 -8M0054714 71
8M0054769 . . . . . 996, 1024
8M0054993 . . . . . 345, 371, 375, 674
8M0054999 . . . . . 29, 32, 33
8M0055000 . . . . . 29, 32
8M0055001 . . . . . 28, 31, 31, 32, 33, 33
8M0055002 . . . . . 28, 31
8M0055003 . . . . . 29, 31
8M0055008 . . . . . 29, 31, 31, 32, 32, 33
48 -8M0055292 . . . . . 918, 923, 927, 931, 933, 951
48 -8M0055293 . . . . . 918, 923, 927, 933, 951
22 -8M0055326 680
48 -8M0055531 . . . . . 913, 918, 923, 927, 934, 935, 936, 940, 942, 943, 945, 951
48 -8M0055533 . . . . . 913, 918, 923, 927, 935, 936, 940, 942, 943, 945, 951
48 -8M0055534 . . . . . 913, 918, 923, 927, 934, 935, 936, 938, 940, 942, 943, 945, 951, 959
48 -8M0055535 . . . . . 913, 918, 923, 927, 934, 935, 936, 938, 940, 942, 943, 945, 951, 959
48 -8M0055536 . . . . . 913, 918, 923, 927, 934, 935, 936, 938, 940, 942, 943, 945, 951, 959
48 -8M0055537 . . . . . 913, 918, 924, 927, 934, 935, 937, 938, 940, 942, 944, 945, 951, 959
48 -8M0055547 . . . . . 806, 813, 814, 815, 816, 817, 824, 826, 827, 828, 834, 841, 852
48 -8M0055548 . . . . . 806, 808, 813, 814, 815, 816, 817, 819, 824, 825, 826, 827, 828, 833, 841, 852
48 -8M0055549 . . . . . 806, 808, 813, 814, 815, 819, 824, 825, 826, 833, 841, 852
48 -8M0055550 . . . . . 806, 808, 813, 814, 815, 819, 824, 825, 826, 833, 841, 852
48 -8M0055551 . . . . . 806, 808, 813, 814, 815, 819, 824, 825, 826, 833, 841, 852
8M0055652 . . . . . 585, 632
8M0056139 . . . . . 349, 379, 382, 676
8M0056140 . . . . . 349, 379, 382, 676
8M0056141 676
8M0056142 676
8M0056143 676
8M0056144 677
8M0056145 . . . . . 349, 379, 382, 676
1200-8M0056211 . . . . . 350, 352, 355, 358, 360
11 -8M0056234 1010
11 -8M0056235 1010
8M0056275 454
8M0056276 454
8M0056277 . . . . . 345, 454
8M0056278 . . . . . 454, 596
8M0056279 . . . . . 345, 454, 596
8M0056547 . . . . . 85, 350
8M0056548 . . . . . 21, 22, 26, 350
8M0056549 . . . . . 25, 26, 26, 350
8M0056619 674
8M0056956 243
8M0056987 633
8M0056988 633
84 -8M0056993 633
8M0056994 633
8M0057047 . . . . . 67, 350
8M0057162 1024
1200-8M0057254 . . . . . 352, 355, 358, 361, 363, 367
1200-8M0057256 . . . . . 352, 355, 358, 360, 363, 367
8M0057307 231
8M0057383 . . . . . 379, 632
8M0057574 . . . . . 153, 156
8M0057575 . . . . . 153, 156
8M0057576 . . . . . 153, 156
8M0057577 . . . . . 169, 393
35 -8M0057677 . . . . . 80, 234, 378
8M0057772 . . . . . 104, 108, 233
33 -8M0057936 . . . . . 9, 12, 233, 234
8M0058173 509
22 -8M0058419 . . . . . 75, 84, 181
84 -8M0058668 . . . . . 359, 361, 364, 368, 372, 375, 526, 586, 601, 603, 619
8M0058677 99
92 -8M0058680 314
92 -8M0058681 315
92 -8M0058682 316
92 -8M0058683 316
8M0058684 99
92 -8M0058690 275
92 -8M0058691 275
92 -8M0058692 276
92 -8M0058693 276
92 -8M0058907 309
92 -8M0058908 309
92 -8M0058910 309
92 -8M0058912 309
92 -8M0058914 308
92 -8M0058915 308
92 -8M0058916 309
33 -8M0058932 120
33 -8M0058933 10
33 -8M0058934 10
33 -8M0058935 10

33 -8M0058936 9
8M0058944 662
78 -8M0059248 164
78 -8M0059257 163
78 -8M0059259 164
78 -8M0059270 162
78 -8M0059272 163
78 -8M0059274 163
8M0059338 100
8M0059339 100
8M0059341 193
8M0059342 193
8M0059343 100
8M0059344 100
78 -8M0059346 162
78 -8M0059348 162
78 -8M0059350 162
78 -8M0059352 162
78 -8M0059354 162
78 -8M0059356 163
78 -8M0059358 163
78 -8M0059360 164
78 -8M0059363 163
78 -8M0059364 164
78 -8M0059366 163
78 -8M0059368 163
8M0059429 634
8M0059430 634
8M0059432 634
8M0059434 634
8M0059435 634
8M0059438 634
8M0059439 634
8M0059529 . . . . . 377, 503
8M0059530 . . . . . 377, 464, 500
8M0059531 . . . . . 377, 500
8M0059532 . . . . . 378, 641
8M0059686 . . . . . 342, 345, 351, 353, 356, 359, 362, 364, 368, 372, 375, 523
8M0059759 211
8M0059850 . . . . . 376, 554
8M0059851 554
8M0059852 554
8M0059853 554
8M0059854 554
8M0059855 554
8M0059856 554
8M0059857 554
8M0059858 554
8M0059859 554
8M0059860 554
8M0059861 554
8M0059862 554
8M0059863 554
8M0059864 554
8M0059865 555
8M0059866 555
8M0059867 555
8M0059868 555
8M0059869 555
8M0059870 555
8M0059871 555
8M0059872 555
8M0059873 555
8M0059874 555
8M0059875 555
8M0059876 555
8M0059877 555
8M0059878 555
8M0059879 555
8M0059880 . . . . . 376, 555
8M0059882 . . . . . 376, 553
8M0059883 553
8M0059884 553
8M0059885 553
8M0059886 553
8M0059887 553
8M0059888 553
8M0059889 553
8M0059890 553
8M0059891 553
8M0059892 553
8M0059893 553
8M0059894 553
8M0059895 553
8M0059896 553
8M0059897 554
8M0059898 554
8M0059899 554
8M0059900 554
8M0059901 554
8M0059902 554
8M0059903 554
8M0059904 554
8M0059905 554
8M0059906 554
8M0059907 554
8M0059908 554
8M0059909 554
8M0059910 . . . . . 376, 554
91 -8M0059911 199
8M0059945 554
8M0059946 554
35 -8M0060041 . . . . . 80, 230, 234, 235, 239, 239, 241, 343, 348, 381, 385
92 -8M0060085 308
92 -8M0060086 309
8M0060147 . . . . . 94, 375, 378, 1027
8M0060248 508
8M0060249 509

8M0060251 509
88 -8M0060252 510
83 -8M0060278 . . . . . 24, 26
48 -8M0060280 978
8M0060782 . . . . . 351, 353, 356, 359, 362, 388, 523
8M0060783 . . . . . 388, 524
32 -8M0061084 72
32 -8M0061089 72
32 -8M0061098 72
8M0061103 . . . . . 49, 379, 656
8M0061334 524
8M0061335 . . . . . 240, 241
8M0061721 . . . . . 48, 54, 378, 655
47 -8M0061756 227
32 -8M0061811 73
32 -8M0061812 74
92 -8M0061870 331
8M0061875 . . . . . 74, 344, 348, 350, 352, 355, 358, 361, 364, 367
8M0061876 . . . . . 74, 344, 348, 350, 352, 355, 358, 361, 364, 367
32 -8M0061882 73
32 -8M0061883 73
32 -8M0061885 72
32 -8M0061886 72
32 -8M0061887 . . . . . 73, 344, 348
32 -8M0061888 73
32 -8M0061890 73
32 -8M0061891 73
32 -8M0061892 72
32 -8M0061893 72
32 -8M0061894 72
32 -8M0061895 72
32 -8M0061896 . . . . . 73, 344, 348
32 -8M0061897 73
32 -8M0061899 . . . . . 73, 343, 348
8M0061986 . . . . . 996, 1003
8M0062051 . . . . . 151, 153, 154, 156
8M0062052 154
8M0062053 154
8M0062054 154
8M0062241 . . . . . 349, 539
79 -8M0062377 . . . . . 347, 366, 369, 373, 377, 380, 384, 390, 434
8M0062406 243
8M0062583 541
32 -8M0062693 . . . . . 56, 57, 378, 541, 542
92 -8M0062765 334
8M0063381 709
8M0063382 . . . . . 393, 709
8M0063432 129
64 -8M0063473 . . . . . 349, 379, 383, 671, 679, 683
64 -8M0063474 . . . . . 671, 679, 683
64 -8M0063475 . . . . . 672, 679, 684
64 -8M0063476 . . . . . 672, 679, 684
64 -8M0063477 . . . . . 672, 679, 684
46 -8M0063542 . . . . . 159, 162
32 -8M0063663 377
78 -8M0063866 566
48 -8M0063951 872
48 -8M0063952 872
54 -8M0064023 653
36 -8M0064067 71
67 -8M0064433 379
48 -8M0064449 . . . . . 809, 810, 811, 820, 821, 822, 836, 838, 843, 858
48 -8M0064450 . . . . . 863, 880
48 -8M0064468 . . . . . 863, 880
48 -8M0064469 . . . . . 863, 880
48 -8M0064470 . . . . . 862, 880
48 -8M0064471 . . . . . 862, 880
48 -8M0064472 . . . . . 862, 880
48 -8M0064473 . . . . . 862, 880
48 -8M0064475 . . . . . 862, 880
48 -8M0064476 . . . . . 862, 880
48 -8M0064477 . . . . . 862, 880
8M0064759 162
8M0064760 162
91 -8M0064794 212
23 -8M0064826 . . . . . 996, 1023
92 -8M0064958 335
92 -8M0064960 331
92 -8M0064961 335
92 -8M0064962 336
35 -8M0065103 . . . . . 95, 297, 297, 298, 298, 364, 367
35 -8M0065104 . . . . . 95, 232, 233, 258, 258, 259, 259, 262, 364, 367, 374
98 -8M0065146 633
57 -8M0065179 . . . . . 232, 233
8M0065285 . . . . . 238, 239
62 -8M0065784 1047
62 -8M0065785 1047
79 -8M0065962 420
79 -8M0065963 420
79 -8M0065970 420
79 -8M0065971 421
79 -8M0065972 421
79 -8M0065973 421
79 -8M0065974 421
79 -8M0065975 421
79 -8M0065976 422
79 -8M0065977 422
79 -8M0065978 422
79 -8M0065979 422
79 -8M0065980 424
79 -8M0065981 424
79 -8M0065982 429

79 -8M0065983 429
79 -8M0065984 428
79 -8M0065985 429
35 -8M0066483 . . . . . 243, 268, 306
84 -8M0066846 569
8M0066847 569
8M0066848 569
47 -8M0067334 243
35 -8M0067337 . . . . . 182, 243
35 -8M0067597 243
8M0067617 243
62 -8M0068687 1058
8M0068784 502
8M0068785 . . . . . 482, 486, 490, 494, 502
8M0068875 571
84 -8M0069106 579
8M0069320 1031
79 -8M0069412 414
79 -8M0069413 415
79 -8M0069414 416
79 -8M0069415 416
79 -8M0069416 415
79 -8M0069417 423
79 -8M0069418 423
79 -8M0069419 423
79 -8M0069422 426
79 -8M0069423 426
79 -8M0069424 426
79 -8M0069426 417
79 -8M0069427 418
79 -8M0069428 419
79 -8M0069429 419
79 -8M0069430 421
79 -8M0069431 425
79 -8M0069432 426
79 -8M0069433 424
79 -8M0069434 427
79 -8M0069436 428
79 -8M0069437 428
79 -8M0069438 427
79 -8M0069459 424
79 -8M0069460 424
79 -8M0069461 425
79 -8M0069462 428
79 -8M0069463 428
92 -8M0069602 304
92 -8M0069603 304
92 -8M0069604 304
8M0069693 . . . . . 38, 40, 41, 352
8M0069711 582
48 -8M0070051 . . . . . 810, 811, 820, 821, 822, 836, 838, 843, 858
48 -8M0070052 . . . . . 803, 804, 810, 811, 820, 821, 822, 836, 838, 843, 858
84 -8M0070053 572
84 -8M0070055 572
84 -8M0070056 571
84 -8M0070058 571
84 -8M0070060 . . . . . 571, 573
84 -8M0070062 571
84 -8M0070063 . . . . . 571, 573
84 -8M0070064 572
84 -8M0070066 572
84 -8M0070068 572
84 -8M0070069 572
84 -8M0070070 572
84 -8M0070071 . . . . . 573, 574
84 -8M0070072 573
48 -8M0070074 . . . . . 806, 807, 809, 811, 812, 813, 824, 835, 837, 842, 851, 924
48 -8M0070076 . . . . . 806, 807, 809, 810, 811, 812, 813, 824, 835, 837, 842, 851
48 -8M0070077 . . . . . 806, 807, 810, 812, 813, 824, 835, 837, 842, 851
48 -8M0070079 . . . . . 806, 807, 812, 813, 824, 835, 837, 842, 851, 924
91 -8M0070098 732
8M0070429 575
8M0070430 575
8M0070435 572
8M0070881 . . . . . 996, 1020
98 -8M0070953 576
92 -8M0070979 312
48 -8M0071088 . . . . . 863, 880
48 -8M0071089 . . . . . 863, 880
48 -8M0071090 . . . . . 863, 880
48 -8M0071091 . . . . . 863, 880
48 -8M0071092 . . . . . 862, 880
48 -8M0071093 . . . . . 862, 880
48 -8M0071094 . . . . . 862, 880
48 -8M0071095 . . . . . 862, 880
48 -8M0071096 . . . . . 862, 880
48 -8M0071097 . . . . . 862, 880
8M0071130 576
8M0071131 576
84 -8M0071357 576
8M0071378 576
50 -8M0071380 . . . . . 38, 41, 356, 358
8M0071418 575
8M0071419 576
8M0071420 576
8M0071493 575
8M0071494 576
84 -8M0071504 579
8M0071505 559
92 -8M0071552 330
10 -8M0071653 385
92 -8M0071836 324
92 -8M0071837 324
92 -8M0071838 324

92 -8M0071841 324
92 -8M0071842 284
8M0071875 162
8M0071877 162
8M0071878 163
8M0071880 163
8M0071881 164
8M0071884 163
8M0071885 163
8M0071886 164
8M0071888 163
8M0071889 163
8M0071890 164
91 -8M0072133 322
91 -8M0072135 282
84 -8M0072192 613
8M0072599 572
8M0072601 662
8M0072610 35
84 -8M0072808 639
8M0073037 . . . . . 647, 665
8M0073038 . . . . . 647, 665
92 -8M0073196 312
92 -8M0073197 312
92 -8M0073198 312
92 -8M0073199 312
92 -8M0073200 313
92 -8M0073201 273
92 -8M0073202 273
92 -8M0073203 273
92 -8M0073204 274
92 -8M0073205 274
8M0073429 . . . . . 104, 116
48 -8M0073456 . . . . . 864, 881
48 -8M0073457 . . . . . 864, 881
48 -8M0073458 . . . . . 871, 884
48 -8M0073459 . . . . . 871, 884
8M0073922 677
8M0073923 677
8M0073924 677
8M0073925 677
8M0073927 677
8M0073928 677
8M0074095 . . . . . 347, 366, 370, 374, 377, 381, 384, 390, 406
8M0074096 . . . . . 347, 366, 370, 374, 377, 381, 384, 390, 406
48 -8M0074191 872
48 -8M0074192 872
48 -8M0074193 872
48 -8M0074194 872
48 -8M0074195 872
48 -8M0074196 872
48 -8M0074197 872
48 -8M0074198 872
48 -8M0074199 872
48 -8M0074200 872
48 -8M0074201 872
48 -8M0074202 873
48 -8M0074203 873
48 -8M0074204 873
48 -8M0074205 873
48 -8M0074206 873
48 -8M0074207 873
48 -8M0074208 873
48 -8M0074209 873
48 -8M0074210 873
48 -8M0074211 873
48 -8M0074212 873
48 -8M0074213 873
48 -8M0074214 873
8M0074744 . . . . . 379, 508
8M0074746 379
8M0074747 508
8M0074845 . . . . . 31, 31, 31, 31, 32, 32, 343, 363, 369, 373
8M0074846 . . . . . 33, 33
48 -8M0074865 . . . . . 839, 870
48 -8M0074866 . . . . . 839, 870
48 -8M0074867 . . . . . 839, 870
48 -8M0074868 . . . . . 839, 870
48 -8M0074869 . . . . . 839, 870
48 -8M0074870 . . . . . 839, 870
48 -8M0074871 . . . . . 839, 870
48 -8M0074872 . . . . . 839, 870
84 -8M0075065 407
84 -8M0075066 408
84 -8M0075067 408
84 -8M0075079 407
84 -8M0075080 408
98 -8M0075237 524
8M0075244 . . . . . 362, 524
8M0075245 . . . . . 342, 345, 359, 362, 364, 368, 372, 375, 524
8M0075246 525
8M0075402 . . . . . 996, 1002
79 -8M0075627 593
79 -8M0075628 592
79 -8M0075629 593
79 -8M0075630 593
79 -8M0075631 593
79 -8M0075632 593
77 -8M0075767 577
77 -8M0075769 578
77 -8M0075773 577
77 -8M0075786 577
77 -8M0075787 577

77 -8M0075794 578
77 -8M0075795 . . . . . 577, 578
77 -8M0075809 577
77 -8M0075824 574
77 -8M0075826 574
77 -8M0075829 574
77 -8M0075831 574
77 -8M0075833 574
77 -8M0075835 575
77 -8M0075836 574
77 -8M0075841 574
77 -8M0075842 575
77 -8M0075843 575
84 -8M0075945 590
8M0076464 242
84 -8M0077124 589
84 -8M0077125 589
84 -8M0077649 408
8M0077699 675
8M0077701 675
8M0077703 675
8M0077705 675
87 -8M0077850 622
92 -8M0078011 269
92 -8M0078012 269
92 -8M0078013 269
92 -8M0078014 269
92 -8M0078015 271
92 -8M0078016 271
77 -8M0078038 571
77 -8M0078039 571
77 -8M0078044 574
77 -8M0078045 574
48 -8M0078084 . . . . . 939, 954
48 -8M0078085 . . . . . 939, 954
48 -8M0078086 . . . . . 939, 954
48 -8M0078087 . . . . . 939, 954
48 -8M0078088 . . . . . 939, 954
48 -8M0078089 . . . . . 939, 954
48 -8M0078090 . . . . . 939, 954
48 -8M0078091 . . . . . 939, 954
48 -8M0078092 . . . . . 939, 955
48 -8M0078093 . . . . . 939, 955
92 -8M0078098 331
8M0078157 . . . . . 454, 597
62 -8M0078179 1055
32 -8M0078210 . . . . . 560, 669
32 -8M0078211 . . . . . 560, 669
32 -8M0078212 . . . . . 560, 670
32 -8M0078213 . . . . . 560, 670
32 -8M0078214 . . . . . 560, 670
32 -8M0078215 . . . . . 560, 670
32 -8M0078216 . . . . . 560, 670
32 -8M0078217 . . . . . 560, 670
92 -8M0078491 270
92 -8M0078616 . . . . . 292, 293
92 -8M0078617 . . . . . 292, 293
92 -8M0078618 . . . . . 254, 255, 292, 294
92 -8M0078619 . . . . . 292, 294
92 -8M0078620 . . . . . 292, 294
92 -8M0078621 . . . . . 254, 256, 292, 294
92 -8M0078622 . . . . . 292, 295
92 -8M0078623 . . . . . 292, 295
92 -8M0078624 . . . . . 254, 255, 257, 292, 295
92 -8M0078625 . . . . . 254, 255
92 -8M0078626 . . . . . 254, 255
92 -8M0078627 . . . . . 254, 255
92 -8M0078628 . . . . . 254, 256
92 -8M0078629 . . . . . 254, 255, 256
92 -8M0078630 . . . . . 254, 255, 256
8M0078858 . . . . . 234, 235
98 -8M0078873 567
98 -8M0078874 567
98 -8M0078875 567
98 -8M0078876 567
98 -8M0078877 567
98 -8M0078878 567
98 -8M0078883 567
98 -8M0078884 567
98 -8M0078885 567
98 -8M0078886 567
8M0078892 637
8M0078924 379
48 -8M0079236 872
48 -8M0079237 872
8M0079286 516
8M0079290 516
8M0079291 516
8M0079348 408
6946-8M0079498 561
8M0079499 . . . . . 379, 383, 561
8M0079500 562
8M0079501 562
48 -8M0079504 . . . . . 806, 807, 809, 810, 811, 813, 824, 835, 837, 842, 851
48 -8M0079692 . . . . . 875, 879
48 -8M0079693 . . . . . 875, 879
48 -8M0079694 . . . . . 875, 879
48 -8M0079695 . . . . . 875, 879
48 -8M0079696 . . . . . 875, 880
48 -8M0079698 . . . . . 875, 879
48 -8M0079699 . . . . . 875, 879
48 -8M0079700 . . . . . 875, 879
48 -8M0079701 . . . . . 875, 879
48 -8M0079702 . . . . . 875, 879
48 -8M0079703 . . . . . 875, 879
48 -8M0079704 . . . . . 875, 879
48 -8M0079705 . . . . . 875, 879
48 -8M0079706 . . . . . 875, 879
48 -8M0079707 . . . . . 875, 880

84 -8M0079847 569
8M0079848 569
84 -8M0079849 570
84 -8M0079850 569
84 -8M0079851 569
79 -8M0079864 . . . . . 347, 366, 369, 373, 377, 380, 384, 390, 434
79 -8M0079865 . . . . . 347, 366, 369, 373, 377, 380, 384, 390, 434
79 -8M0079866 . . . . . 347, 366, 369, 373, 377, 380, 384, 390, 434
79 -8M0079867 . . . . . 347, 366, 369, 373, 377, 380, 384, 390, 434
79 -8M0079873 409
79 -8M0079874 410
79 -8M0079880 . . . . . 366, 370, 373, 377, 380, 384, 390, 410
79 -8M0079881 . . . . . 347, 366, 370, 373, 377, 380, 384, 390, 411
79 -8M0079882 409
79 -8M0079883 409
79 -8M0079884 411
79 -8M0079885 412
79 -8M0079886 411
79 -8M0079887 . . . . . 347, 366, 370, 373, 377, 380, 384, 390, 412
79 -8M0079889 . . . . . 347, 366, 370, 373, 377, 380, 384, 390, 412
79 -8M0079892 . . . . . 347, 366, 370, 373, 377, 380, 384, 390, 410
79 -8M0079893 410
79 -8M0079894 . . . . . 347, 366, 370, 373, 377, 380, 384, 390, 411
79 -8M0079895 411
79 -8M0079896 413
79 -8M0079897 . . . . . 347, 366, 370, 373, 377, 380, 384, 390, 413
79 -8M0079898 413
79 -8M0079900 . . . . . 347, 366, 370, 373, 377, 380, 384, 390, 413
79 -8M0079901 . . . . . 347, 366, 370, 373, 377, 380, 384, 390, 414
79 -8M0079902 413
79 -8M0079903 413
79 -8M0079911 412
79 -8M0079913 411
79 -8M0079924 412
79 -8M0079925 410
79 -8M0079926 410
79 -8M0079927 410
79 -8M0079947 413
35 -8M0079962 179
35 -8M0079963 . . . . . 81, 179
10 -8M0080049 732
37 -8M0080152 228
84 -8M0080191 569
84 -8M0080192 570
84 -8M0080193 570
84 -8M0080194 570
8M0080199 . . . . . 382, 386, 662
8M0080200 662
8M0080201 . . . . . 382, 386, 663
84 -8M0080216 510
84 -8M0080787 570
8M0080795 . . . . . 157, 162
48 -8M0081143 929
48 -8M0081238 . . . . . 920, 929
48 -8M0081239 . . . . . 920, 929
48 -8M0081592 . . . . . 919, 929
1687-8M0081852 204
8M0081910 296
8M0081911 296
8M0081912 296
8M0081913 296
8M0081914 257
8M0081915 257
8M0081916 257
8M0081917 257
32 -8M0082066 . . . . . 161, 162
35 -8M0082290 179
35 -8M0082291 . . . . . 81, 178
62 -8M0082304 1049
92 -8M0082339 330
84 -8M0082859 589
8M0082864 656
8M0082867 656
35 -8M0082911 . . . . . 94, 233
62 -8M0083245 1049
84 -8M0083249 595
8M0083288 728
1600-8M0083306 . . . . . 204, 204
87 -8M0083437 . . . . . 49, 344, 349, 367, 379, 643, 657
87 -8M0083438 643
87 -8M0083439 . . . . . 464, 643
1200-8M0083449 . . . . . 350, 352, 355, 358, 360
1200-8M0083451 . . . . . 344, 348, 352, 355, 358, 361, 363, 367, 370, 374, 378
1200-8M0083452 . . . . . 344, 348, 352, 355, 358, 361, 364, 367, 370, 374, 378
8M0083666 . . . . . 342, 345, 359, 361, 364, 368, 372, 375, 525
8M0083667 . . . . . 342, 345, 359, 361, 364, 368, 372, 375, 525
8M0083860 . . . . . 361, 527
1600-8M0084203 . . . . . 205, 205, 205
91 -8M0084205 731
84 -8M0084296 . . . . . 568, 569
48 -8M0084491 . . . . . 806, 807, 812, 813, 824, 834, 836, 841, 850, 923, 935, 936

48 -8M0084493 . . . . . 806, 807, 812, 813, 824, 834, 836, 841, 850, 923, 935, 936
48 -8M0084494 . . . . . 805, 806, 807, 812, 813, 814, 819, 824, 825, 834, 836, 841, 850, 923, 935, 936, 938
48 -8M0084495 . . . . . 805, 806, 807, 812, 813, 814, 819, 824, 825, 834, 836, 841, 850, 923, 935, 936, 938
48 -8M0084496 . . . . . 805, 806, 807, 812, 813, 814, 819, 824, 825, 834, 836, 841, 850, 923, 935, 936, 938
48 -8M0084497 . . . . . 805, 806, 812, 813, 814, 819, 824, 825, 834, 836, 841, 850, 924, 935, 937, 938
8M0084538 198
8M0085477 518
8M0085481 518
8M0085491 518
8M0085595 646
8M0085611 518
8M0085613 518
8M0085615 518
8M0085617 519
8M0085619 519
8M0085664 . . . . . 171, 172
8M0085693 186
88 -8M0085705 652
8M0085733 525
8M0085790 525
8M0085794 129
8M0085804 519
8M0085806 519
8M0086395 1005
8M0086400 243
77 -8M0086454 568
77 -8M0086455 568
77 -8M0086456 568
77 -8M0086459 568
77 -8M0086461 568
77 -8M0086462 568
77 -8M0086463 568
77 -8M0086464 568
77 -8M0086465 568
77 -8M0086467 568
77 -8M0086469 568
8M0086565 . . . . . 571, 573
8M0086566 571
8M0086567 571
8M0087542 . . . . . 375, 504, 640
57 -8M0087881 239
8M0088039 1009
8M0088724 . . . . . 171, 172
8M0088751 . . . . . 386, 671
8M0088752 . . . . . 387, 671
8M0088753 . . . . . 387, 671
8M0088754 . . . . . 387, 671
8M0088755 . . . . . 387, 671
8M0088756 . . . . . 387, 671
8M0088757 . . . . . 387, 671
8M0088758 . . . . . 387, 671
8M0088761 . . . . . 387, 671
79 -8M0088771 416
8M0088792 572
32 -8M0088822 541
35 -8M0088825 232
32 -8M0088855 . . . . . 373, 500
57 -8M0088876 . . . . . 239, 242
64 -8M0088973 . . . . . 669, 680, 685
8M0089111 . . . . . 373, 591
92 -8M0089198 315
93 -8M0089391 249
93 -8M0089392 249
8M0089492 575
8M0089494 575
8M0089495 575
8M0089496 575
8M0089497 186
8M0089498 . . . . . 159, 162
8M0089499 . . . . . 158, 162
8M0089504 . . . . . 151, 156
8M0089505 . . . . . 169, 393
8M0089506 . . . . . 171, 172, 392
8M0089513 574
8M0089514 574
8M0089515 574
8M0089516 574
8M0089715 . . . . . 239, 241
84 -8M0089989 581
8M0090334 . . . . . 29, 34
87 -8M0090402 619
8M0090442 . . . . . 94, 375
8M0090447 . . . . . 373, 594
48 -8M0090451 . . . . . 863, 880
48 -8M0090453 . . . . . 863, 880
48 -8M0090455 . . . . . 863, 880
48 -8M0090457 . . . . . 863, 880
8M0090558 236
8M0090559 236
8M0090819 233
92 -8M0090838 271
8M0091534 . . . . . 103, 108, 233, 375
8M0091565 . . . . . 559, 595
8M0091581 575
48 -8M0091978 . . . . . 866, 882
48 -8M0091979 . . . . . 866, 882
48 -8M0091980 . . . . . 866, 882
48 -8M0091981 . . . . . 865, 882
48 -8M0091982 . . . . . 865, 882
48 -8M0091983 . . . . . 865, 882
48 -8M0091984 . . . . . 865, 882
48 -8M0091985 . . . . . 865, 882
48 -8M0091986 . . . . . 865, 882

48 -8M0091987 . . . . . 865, 882
48 -8M0091988 . . . . . 865, 882
48 -8M0091989 865
48 -8M0091990 . . . . . 866, 882
48 -8M0091991 . . . . . 866, 882
48 -8M0091992 . . . . . 866, 882
48 -8M0091993 . . . . . 865, 882
48 -8M0091994 . . . . . 865, 882
48 -8M0091995 . . . . . 865, 882
48 -8M0091996 . . . . . 865, 882
48 -8M0091997 . . . . . 865, 882
48 -8M0091998 . . . . . 865, 882
48 -8M0091999 . . . . . 865, 882
48 -8M0092000 . . . . . 865, 882
48 -8M0092001 . . . . . 865, 882
48 -8M0092002 . . . . . 863, 881
48 -8M0092003 . . . . . 863, 881
48 -8M0092004 . . . . . 863, 881
48 -8M0092005 . . . . . 863, 881
48 -8M0092006 . . . . . 863, 881
48 -8M0092007 . . . . . 863, 881
48 -8M0092008 . . . . . 863, 881
48 -8M0092009 . . . . . 863, 881
48 -8M0092010 . . . . . 863, 881
48 -8M0092011 . . . . . 863, 881
48 -8M0092012 . . . . . 863, 881
48 -8M0092013 . . . . . 863, 881
48 -8M0092014 . . . . . 863, 881
48 -8M0092015 . . . . . 863, 881
48 -8M0092016 . . . . . 863, 881
48 -8M0092017 . . . . . 863, 881
8M0092022 20
8M0092088 519
8M0092091 519
8M0092849 629
8M0092850 629
8M0092851 629
8M0092854 629
8M0092927 212
8M0093480 243
57 -8M0093495 243
57 -8M0093513 243
8M0093561 242
8M0093581 . . . . . 48, 53, 54, 344, 371, 374, 655
35 -8M0093688 . . . . . 181, 240, 241, 242
8M0094135 210
8M0094136 210
8M0094232 237
8M0094233 237
84 -8M0094239 646
84 -8M0094269 639
8M0094529 . . . . . 233, 234
8M0094637 . . . . . 48, 53, 54, 54, 344, 349, 371, 374, 655
8M0094680 . . . . . 149, 155, 156
8M0094681 . . . . . 149, 156
8M0094682 . . . . . 150, 155, 156
22 -8M0094865 . . . . . 130, 131
92 -8M0094987 285
92 -8M0094988 285
91 -8M0095093 732
8M0095310 591
33 -8M0095454 . . . . . 120, 121, 123, 239, 241
8M0095543 559
8M0095632 518
8M0095633 518
35 -8M0095658 81
35 -8M0095659 . . . . . 81, 235
8M0095669 81
22 -8M0095698 . . . . . 129, 131
84 -8M0095716 . . . . . 453, 463
84 -8M0095826 . . . . . 453, 463
84 -8M0095827 . . . . . 453, 463
84 -8M0095828 . . . . . 453, 463
8M0095832 . . . . . 135, 153, 156, 392
8M0095833 . . . . . 135, 153, 156, 392
8M0095834 . . . . . 135, 153, 156, 392
48 -8M0095885 . . . . . 835, 851
48 -8M0095886 . . . . . 835, 851
48 -8M0095887 . . . . . 835, 851
48 -8M0095888 . . . . . 835, 851
48 -8M0095889 . . . . . 835, 851
48 -8M0095890 . . . . . 835, 851
8M0096314 670
8M0096315 670
8M0096316 670
8M0096317 670
8M0096319 670
8M0096320 670
8M0096321 670
8M0096322 670
8M0096323 670
8M0096324 671
8M0096701 . . . . . 151, 156
8M0096751 516
8M0096752 516
8M0096753 516
8M0097129 55
91 -8M0097143 212
8M0097267 670
8M0097268 671
57 -8M0097728 . . . . . 239, 242
8M0097838 83
8M0097850 673
8M0097854 236
8M0097855 236
8M0097856 236
8M0097857 236
8M0097858 237

8M0097859 237
8M0098264 . . . . . 32, 33, 33, 33, 33, 503, 504, 504, 504, 505, 505, 505, 506, 506, 506, 506
8M0098273 . . . . . 503, 505, 506, 506, 506
8M0098553 672
8M0098561 173
8M0098562 173
8M0098585 . . . . . 48, 55, 382, 655
8M0098892 136
8M0099152 568
8M0099153 568
8M0099154 568
8M0099412 452
8M0099429 242
62 -8M0099660 1047
62 -8M0099661 1047
22 -8M0099734 . . . . . 129, 131
8M0099735 . . . . . 169, 393
48 -8M0100104 . . . . . 862, 880
48 -8M0100105 . . . . . 862, 880
48 -8M0100106 . . . . . 862, 880
48 -8M0100107 . . . . . 862, 880
48 -8M0100109 . . . . . 861, 880
48 -8M0100110 . . . . . 862, 880
48 -8M0100111 . . . . . 862, 880
48 -8M0100112 . . . . . 862, 880
8M0100517 187
47 -8M0100527 243
8M0101387 171
8M0101413 215
8M0101414 215
8M0101415 215
8M0101416 215
8M0101417 216
91 -8M0101435 280
8M0101601 999
84 -8M0101640 598
84 -8M0101641 598
84 -8M0101642 598
84 -8M0101643 598
84 -8M0101644 598
8M0101650 597
22 -8M0102849 183
35 -8M0103095 82
35 -8M0103096 . . . . . 82, 85
8M0103315 594
48 -8M0103516 . . . . . 913, 918, 924, 928, 934, 936, 937, 938, 941, 942, 944, 946, 952, 959
48 -8M0103517 . . . . . 913, 918, 924, 928, 934, 936, 937, 938, 941, 942, 944, 946, 952, 959
48 -8M0103518 . . . . . 913, 918, 924, 928, 934, 936, 937, 938, 941, 942, 944, 946, 952, 959
48 -8M0103519 . . . . . 913, 918, 924, 928, 934, 936, 937, 938, 941, 942, 944, 946, 952, 959
48 -8M0103520 . . . . . 913, 919, 924, 928, 934, 936, 937, 938, 941, 942, 944, 946, 952, 959
48 -8M0103521 . . . . . 913, 919, 924, 928, 934, 936, 937, 938, 941, 942, 944, 946, 952, 959
48 -8M0103522 . . . . . 913, 919, 924, 928, 934, 936, 937, 938, 941, 942, 944, 946, 952, 959
48 -8M0103523 . . . . . 913, 919, 924, 928, 934, 936, 937, 938, 941, 942, 944, 946, 952, 959
48 -8M0103524 . . . . . 913, 919, 924, 928, 934, 936, 937, 938, 941, 942, 944, 946, 952, 959
48 -8M0103525 . . . . . 914, 919, 924, 928, 934, 936, 937, 938, 941, 942, 944, 946, 952, 959
48 -8M0103526 . . . . . 914, 919, 924, 928, 935, 936, 937, 938, 941, 944, 946, 953, 959
48 -8M0103527 . . . . . 914, 919, 924, 928, 935, 936, 937, 939, 941, 943, 944, 946, 953, 959
48 -8M0103528 . . . . . 914, 919, 924, 928, 935, 936, 937, 938, 941, 943, 944, 946, 953, 959
48 -8M0103529 . . . . . 914, 919, 924, 928, 935, 936, 937, 939, 941, 943, 944, 946, 953, 959
48 -8M0103530 . . . . . 914, 919, 924, 928, 935, 936, 937, 938, 941, 943, 944, 946, 953, 959
48 -8M0103531 . . . . . 914, 919, 925, 928, 935, 936, 937, 939, 942, 943, 944, 946, 953, 959
48 -8M0103532 . . . . . 914, 919, 924, 928, 936, 937, 938, 941, 943, 946, 953, 959
48 -8M0103533 . . . . . 914, 919, 925, 928, 935, 936, 937, 939, 942, 943, 944, 946, 953, 959
98 -8M0103686 81
8M0103837 . . . . . 43, 50, 353
8M0103838 . . . . . 43, 50, 353
8M0103839 . . . . . 42, 50
8M0103840 . . . . . 42, 50
35 -8M0103963 182
8M0104197 . . . . . 43, 50, 356
8M0104209 156
8M0104210 156
8M0104211 156
47 -8M0104229 . . . . . 238, 239, 240, 240, 241, 242
43 -8M0104360 206
48 -8M0104417 . . . . . 862, 880
48 -8M0104418 . . . . . 862, 880
48 -8M0104419 . . . . . 862, 880
48 -8M0104420 . . . . . 862, 880
8M0104775 576
8M0105087 . . . . . 59, 64, 378
8M0105089 . . . . . 58, 64, 375

8M0105090 . . . . . 59, 64, 375
84 -8M0105243 436
84 -8M0105263 82
84 -8M0105264 82
8M0105518 598
48 -8M0106543 . . . . . 860, 882
48 -8M0106544 . . . . . 860, 882
48 -8M0106545 . . . . . 859, 882
48 -8M0106546 . . . . . 859, 882
48 -8M0106547 . . . . . 859, 882
48 -8M0106548 . . . . . 859, 882
8M0106702 567
8M0106703 567
8M0106704 567
8M0106705 567
8M0106706 567
8M0106961 173
98 -8M0106963 173
8M0107056 577
8M0107220 1000
8M0107510 257
8M0107511 296
8M0107512 258
8M0107513 297
97 -8M0107546 99
97 -8M0107547 99
97 -8M0107548 99
97 -8M0107549 99
97 -8M0107550 99
97 -8M0107551 99
48 -8M0108350 . . . . . 857, 881
48 -8M0108351 . . . . . 857, 881
48 -8M0108352 . . . . . 857, 881
48 -8M0108353 . . . . . 857, 881
48 -8M0108354 . . . . . 857, 881
48 -8M0108357 . . . . . 857, 881
92 -8M0108523 294
92 -8M0108524 293
8M0109049 . . . . . 132, 208
8M0109050 . . . . . 132, 208
84 -8M0109294 579
84 -8M0109337 579
77 -8M0109482 566
8M0109505 510
8M0109506 510
8M0109507 509
8M0109508 509
8M0109543 . . . . . 82, 374, 378
8M0109720 583
8M0109722 583
98 -8M0109756 66
48 -8M0110303 . . . . . 858, 881
48 -8M0110304 . . . . . 858, 881
92 -8M0110567 311
48 -8M0111147 . . . . . 862, 880
48 -8M0111148 . . . . . 862, 880
48 -8M0111149 . . . . . 862, 880
48 -8M0111150 . . . . . 862, 880
48 -8M0111151 . . . . . 861, 880
8M0111544 583
8M0111545 583
8M0111546 583
8M0111547 583
8M0111550 583
8M0111552 583
8M0111553 583
8M0111554 583
92 -8M0111677 320
92 -8M0111679 320
92 -8M0111680 321
8M0111837 583
77 -8M0111847 584
48 -8M0111924 . . . . . 858, 882
48 -8M0111925 . . . . . 858, 882
8M0112041 583
48 -8M0113150 . . . . . 834, 853
8M0113313 184
48 -8M0113416 . . . . . 833, 848
8M0113442 583
35 -8M0113498 . . . . . 82, 381
48 -8M0113928 . . . . . 859, 882
48 -8M0113929 . . . . . 859, 882
48 -8M0113930 . . . . . 859, 882
48 -8M0113931 . . . . . 859, 882
48 -8M0113932 . . . . . 859, 882
48 -8M0113933 . . . . . 859, 882
48 -8M0113934 . . . . . 859, 882
48 -8M0113935 . . . . . 859, 882
48 -8M0113936 . . . . . 859, 882
48 -8M0113937 . . . . . 859, 882
48 -8M0113938 . . . . . 859, 882
48 -8M0113939 . . . . . 859, 882
48 -8M0113940 . . . . . 859, 882
48 -8M0113941 . . . . . 859, 882
48 -8M0113942 . . . . . 859, 882
48 -8M0113943 . . . . . 859, 882
48 -8M0113944 . . . . . 859, 882
48 -8M0113945 . . . . . 859, 882
48 -8M0113946 . . . . . 859, 882
48 -8M0113947 . . . . . 859, 882
48 -8M0113948 . . . . . 859, 882
48 -8M0113949 . . . . . 859, 882
48 -8M0113950 . . . . . 859, 882
48 -8M0113951 . . . . . 859, 882
48 -8M0113952 . . . . . 859, 882
48 -8M0113953 . . . . . 859, 882
48 -8M0113954 . . . . . 859, 882
48 -8M0113955 . . . . . 859, 882
48 -8M0113956 . . . . . 859, 882
48 -8M0113957 . . . . . 859, 882

48 -8M0113958 . . . . . 859, 882
48 -8M0113959 . . . . . 859, 882
8M0113978 583
48 -8M0114408 . . . . . 818, 819, 835, 842, 854
48 -8M0114409 . . . . . 818, 819, 835, 842, 854
48 -8M0114410 . . . . . 818, 835, 842, 854
84 -8M0114502 583
35 -8M0114618 . . . . . 82, 385
8M0114782 528
91 -8M0114831 732
91 -8M0114832 732
91 -8M0114833 732
8M2000017 . . . . . 193, 196
91 -8M2001017 732
84 -8M2004357 579
8M2004358 574
8M2004359 574
8M2004360 573
8M2004361 573
8M2004362 573
8M2010067 582
8M2011935 582
21 -8M2017060 . . . . . 239, 240, 241, 241
33 -8M2018369 . . . . . 120, 121, 122, 122, 123, 123, 123, 239, 240, 241
32 -8M2019252 711
32 -8M2019253 711
32 -8M2019254 711
8M2800008 577
87 -8M3001384 582
8M3800000 576
84 -8M6000699 571
84 -8M6000701 572
84 -8M6000703 573
86 -8M6000708 596
22 -8M6000760 680
22 -8M6000771 680
22 -8M6000772 680
8M6001342 646
8M6001343 . . . . . 370, 374, 646
22 -8M6001381 680
22 -8M6001390 681
22 -8M6001392 681
84 -8M6001454 572
84 -8M6001455 572
84 -8M6001456 . . . . . 572, 573
8M6001759 407
8M6001760 409
8M6001761 409
8M6001762 409
8M6001763 407
8M6001764 407
8M6001765 407
8M6001766 408
8M6001767 408
79 -8M6001946 593
35 -8M6002131 243
8M6002180 559
8M6002266 595
8M6002270 596
8M6002274 243
8M6002359 . . . . . 422, 451, 633
35 -8M6002390 . . . . . 182, 243
79 -8M6002607 419
8M6003440 407
8M6003441 407
8M6003460 409
8M6003663 436
8M8000033 206
8M8000035 206
8M8020356 215
8M8021162 213
48 -8M8021430 871
48 -8M8021440 871
48 -8M8021450 871
48 -8M8021460 871
48 -8M8021470 871
48 -8M8021480 871
48 -8M8021490 871
48 -8M8021500 871
48 -8M8021510 871
48 -8M8021520 871
48 -8M8021530 871
48 -8M8021540 871
48 -8M8021550 871
48 -8M8021560 871
48 -8M8021590 871
48 -8M8021600 871
48 -8M8021610 871
48 -8M8021620 871
48 -8M8021630 871
48 -8M8021640 871
48 -8M8021650 872
48 -8M8021660 872
48 -8M8021670 872
48 -8M8021680 872
48 -8M8021690 872
48 -8M8021700 872
8M8022198 214
8M8022263 1004
48 -8M8022340 . . . . . 839, 870
48 -8M8022349 . . . . . 839, 870
48 -8M8022350 . . . . . 839, 870
48 -8M8022359 . . . . . 839, 870
48 -8M8022360 . . . . . 839, 870
48 -8M8022369 . . . . . 839, 870

48 -8M8022370 . . . . . 839, 870
48 -8M8022379 . . . . . 839, 870
48 -8M8022380 . . . . . 839, 870
48 -8M8022389 . . . . . 839, 870
48 -8M8022390 . . . . . 839, 870
48 -8M8022399 . . . . . 839, 870
48 -8M8022400 . . . . . 839, 870
48 -8M8022409 . . . . . 839, 870
48 -8M8022410 . . . . . 839, 870
48 -8M8022419 . . . . . 839, 870
48 -8M8022420 . . . . . 839, 870
48 -8M8022429 . . . . . 839, 870
48 -8M8022430 . . . . . 839, 870
48 -8M8022439 . . . . . 839, 870
48 -8M8022440 . . . . . 839, 870
48 -8M8022449 . . . . . 839, 870
48 -8M8022450 . . . . . 839, 870
48 -8M8022459 . . . . . 839, 870
48 -8M8022460 . . . . . 839, 870
48 -8M8022469 . . . . . 839, 870
48 -8M8022470 . . . . . 839, 870
48 -8M8022479 . . . . . 839, 870
48 -8M8023120 . . . . . 818, 819, 835, 842, 854
48 -8M8023140 . . . . . 818, 819, 835, 842, 854
48 -8M8023160 . . . . . 818, 835, 842, 854
48 -8M8023180 . . . . . 818, 835, 842, 854
8M8023320 211
8M8023358 211
8M8023359 211
48 -8M8023600 871
48 -8M8023610 871
8M8023624 210
8M8023625 210
8M8023626 211
8M8023627 211
8M8023731 206
8M8023733 206
8M8023737 206
8M8023741 206
48 -8M8023800 872
48 -8M8023810 872
48 -8M8023820 872
48 -8M8023830 872
48 -8M8023840 872
48 -8M8023850 872
48 -8M8023860 872
48 -8M8023870 872
48 -8M8023880 872
48 -8M8023890 872
48 -8M8023900 872
48 -8M8023910 872
48 -8M8023920 872
48 -8M8023930 872
48 -8M8023940 872
48 -8M8023950 872
48 -8M8023960 872
48 -8M8023970 872
48 -8M8023980 872
48 -8M8023990 872
48 -8M8024000 872
48 -8M8024010 872
48 -8M8024110 872
48 -8M8024120 872
8M8024581 208
8M8024582 209
8M8024583 209
8M8024584 209
8M8024589 599
8M8024668 203
8M8025968 206
8M8025969 206
8M8025970 206
8M8025971 206
8M8025972 206
8M8025973 206
8M8026000 202
8M8026004 215
8M8026006 214
8M8026029 208
84 -8M8026041 . . . . . 216, 519
84 -8M8026042 . . . . . 216, 520
84 -8M8026043 . . . . . 216, 520
84 -8M8026044 . . . . . 216, 520
8M8026070 214
48 -8M8026210 . . . . . 945, 955
48 -8M8026220 . . . . . 945, 955
48 -8M8026230 . . . . . 945, 955
48 -8M8026240 . . . . . 945, 955
48 -8M8026250 . . . . . 945, 955
48 -8M8026260 . . . . . 945, 955
48 -8M8026270 . . . . . 945, 955
48 -8M8026280 . . . . . 945, 955
48 -8M8026290 . . . . . 945, 956
48 -8M8026300 . . . . . 945, 956
48 -8M8026310 . . . . . 945, 956
48 -8M8026320 . . . . . 945, 956
48 -8M8026330 . . . . . 945, 956
48 -8M8026340 . . . . . 945, 956
48 -8M8026390 . . . . . 945, 956
48 -8M8026400 . . . . . 945, 956
48 -8M8026410 . . . . . 945, 956
48 -8M8026420 . . . . . 945, 956
48 -8M8026430 . . . . . 945, 956
48 -8M8026440 . . . . . 945, 956
48 -8M8026470 . . . . . 945, 956
48 -8M8026480 . . . . . 945, 956
48 -8M8026555 . . . . . 815, 816, 817, 833, 841, 850, 915, 923

48 - 8M8026560 . . . . . 807, 808, 813, 814, 815, 816, 817, 824, 826, 827, 828, 833, 841, 850, 915, 923
48 - 8M8026570 . . . . . 807, 808, 813, 814, 815, 816, 817, 824, 825, 826, 827, 828, 833, 841, 850, 915, 923
48 - 8M8026580 . . . . . 807, 808, 813, 814, 815, 816, 817, 819, 824, 825, 826, 827, 828, 833, 841, 850, 923
48 - 8M8026590 . . . . . 807, 808, 813, 814, 815, 819, 824, 825, 826, 833, 841, 850, 915, 923
48 - 8M8026600 . . . . . 807, 808, 813, 814, 815, 819, 824, 825, 826, 833, 841, 850, 916, 923
48 - 8M8026625 . . . . . 816, 817, 818, 827, 828, 829, 832, 849, 915, 922
48 - 8M8026630 . . . . . 809, 816, 817, 818, 827, 828, 829, 832, 850, 915, 922
48 - 8M8026635 . . . . . 809, 816, 817, 818, 827, 828, 829, 832, 850, 915, 922
48 - 8M8026640 . . . . . 809, 816, 817, 818, 827, 828, 829, 832, 850, 915, 922
48 - 8M8026650 . . . . . 832, 849, 916, 919, 921
48 - 8M8026655 . . . . . 832, 849, 917, 919, 921
48 - 8M8026790 . . . . . 804, 805, 806, 814, 819, 823, 824, 825, 836, 843, 854
48 - 8M8026820 . . . . . 803, 804, 806, 814, 819, 823, 824, 825, 835, 843, 854
48 - 8M8026830 . . . . . 834, 836, 841, 843, 855
32 - 8M8026967 . . . . . 344, 348
8M8027354 212
8M8027372 212
48 - 8M8027497 . . . . . 915, 917, 923, 927, 931, 933, 950
48 - 8M8027498 . . . . . 915, 917, 923, 927, 931, 933, 950
48 - 8M8027500 . . . . . 915, 917, 923, 927, 931, 933, 950
48 - 8M8027502 . . . . . 915, 918, 923, 927, 931, 933, 950
48 - 8M8027504 . . . . . 915, 918, 923, 927, 931, 933, 950
48 - 8M8027506 . . . . . 916, 918, 923, 927, 931, 933, 950
48 - 8M8027511 . . . . . 915, 917, 922, 926, 930, 932, 950
48 - 8M8027512 . . . . . 915, 917, 922, 926, 930, 932, 950
48 - 8M8027513 . . . . . 915, 917, 922, 926, 930, 932, 950
48 - 8M8027514 . . . . . 915, 917, 922, 926, 930, 932, 950
48 - 8M8027516 . . . . . 916, 919, 921, 930, 950
48 - 8M8027517 . . . . . 917, 919, 921, 930, 950
8M8027677 . . . . . 56, 57, 542
63 - 8M9200340 1058
1667- 9011J16 67
48 - 90159A46 . . . . . 811, 820, 821, 822, 823, 835, 838, 842, 857, 924
90185A 1 . . . . . 185, 1027
90362A 3 637
91 - 90455 1 732
90468A 1 626
50 - 90983A 5 . . . . . 37, 40, 40, 41, 41, 41, 41, 41
1647- 9148T81 66
84 - 91942A 4 . . . . . 391, 636
92020A 1 . . . . . 393, 711
92020A 2 . . . . . 393, 711
92020A 3 . . . . . 393, 711
92418 1025
56 - 92729A49 . . . . . 65, 353
92876A12 707
92876A12 . . . . . 344, 371, 375, 705, 707
92876A 8 . . . . . 344, 349, 371, 375, 707
92876A 9 . . . . . 344, 349, 371, 375, 708
93320A13 . . . . . 137, 145, 146, 146, 147, 147
93320A14 . . . . . 137, 146
93320A15 . . . . . 137, 146, 147
93322A10 . . . . . 137, 148, 149
93322A12 . . . . . 137, 148, 148, 149, 149
84 - 93347A 3 636
33 - 941 . . . . . 7, 17, 18
94185A17 . . . . . 43, 50
94185A18 . . . . . 43, 50
94286T 1 . . . . . 102, 109, 110
45 - 94819T 5 . . . . . 171, 172, 172, 172, 173
27 - 94996T 2 243
84 - 95084A10 650
84 - 95084A13 650
18 - 95295 . . . . . 996, 1015
95419A 1 . . . . . 45, 51
22 - 95633M 67
95723A 4 . . . . . 39, 41, 41, 41
87 - 95810A 8 . . . . . 38, 40, 41, 41, 41
92 - 95812 336
95845A 5 . . . . . 21, 22, 22, 23, 23, 23, 23, 23
398 - 9610A27 200
46 - 96148T 8 230
96186A 2 709
96708A 4 . . . . . 393, 711
18 - 97028M 1014
33 - 97180Q 6, 13, 14, 14, 15, 15, 16,

16,
16, 17,
17,
17
33 - 97182Q 6, 13, 13, 14, 14, 15, 15, 16, 16, 16, 17
33 - 97184 . . . . . 6, 13, 13
33 - 97186 . . . . . 6, 13, 14, 14
97258A 1 501
33 - 97389 . . . . . 120, 121, 121
48 - 97868A46 . . . . . 816, 817, 818, 827, 828, 980, 980, 984
86 - 98199T 648
91 - 98234A 2 731
98432Q 6 . . . . . 102, 117
98432T 6 . . . . . 102, 106, 107, 109, 109, 110
98571A 3 55
98634A20 . . . . . 170, 172, 172, 392
A -AA200046M 1036
A -AA240128M 1036
A -AA240129M 1036
A -AA240130M 1038
A -AA240131M 1038
A -AA240133M 1036
A -AA260046M 1040
A -AA260047M 1040
A -AA270128M 1036
A -AA270129M 1038
A -AA270130M 1038
A -AA270132M 1037
A -AA270133M 1037
A -AA280042M 1040
A -AA280043M 1041
A -AA300054M 1041
A -AA300055M 1042
A -AA310124M 1038
A -AA310125M 1039
A -AA310127M 1037
A -AA310128M 1037
A -AA310129M 1040
A -AA310130M 1041
A -AA340132M 1038
A -AA340133M 1039
A -AA340135M 1037
A -AA340136M 1037
A -AA350053M 1041
A -AA350054M 1042
1 -AA350055M 1043
A -AA380107M 1039
A -AA380108M 1039
A -AA400056M 1043
A -AA430090M 1039
A -AA430091M 1039
A -AA430092M 1042
A -AA430093M 1042
A -AA460007M 1042
A -AA460008M 1042
A -AA470033M 1039
A -AA470034M 1040
A -AA530030M 1040
A -AA570055M 1043
A -AA620057M 1043
12 -F1866 1016
F197787Q3 77
F197787T3 77
F213238Q2 77
F213238T2 77
F531299 1015
F58685-2 556
F5H078 614
F5H094 705
F5H208/10 556
F5H208/18 556
F5H208/20 556
F5H208/22 556
F5H268 614
F697299 1017
11 -F7048 1011
12 -F8167 1016
FA324101 1013
FA58976-1 556
FA94094-2 1007
FK247 1013
FK719059 94
48 -FP430 983
48 -FP6430 . . . . . 914, 983
FP6477 . . . . . 914, 983, 985
48 -FP669-3 . . . . . 916, 984
48 -FP685-3 . . . . . 916, 984
48 -FP686-4 . . . . . 916, 984
48 -FP692-3 . . . . . 916, 984
48 -FP743-2 . . . . . 916, 984
M879341T 105, 119
48 -MAF12406T 830, 845, 964
NLA 205, 383
QA1912X 913, 918, 924, 927, 934, 935, 937, 938, 941, 942, 944, 945, 948, 957, 960, 960, 961, 962
QA1916X 913, 918, 924, 927, 934, 935, 937, 938, 941, 942, 944, 945, 948, 957, 960, 960, 961, 962
QA1918X 913, 918, 924, 927, 934, 935, 937, 938, 941, 942, 944, 945, 948, 957, 960, 960, 961, 962

QA1920X 913, 918, 924, 927, 934, 935, 937, 938, 941, 942, 944, 945, 948, 957, 960, 960, 961, 962
QA1940R 939, 954
QA1941R 939, 954
QA1946R 939, 954
QA1947R 939, 954
QA1952R 939, 954
QA1953R 939, 954
QA2000X 918, 924, 934, 935, 937, 938, 940, 942, 944, 945, 948, 960
QA2004X 913, 918, 924, 934, 935, 937, 938, 941, 942, 944, 945, 948, 957, 960, 960, 962
QA2006X 918, 924, 934, 935, 937, 938, 941, 942, 944, 945, 948, 960, 961
QA2008X 913, 918, 924, 927, 934, 935, 937, 938, 941, 942, 944, 945, 948, 957, 960, 962
QA2010X 918, 924, 934, 935, 937, 938, 945, 948, 960, 961, 962
QA2014X 918, 924, 934, 935, 937, 938, 941, 942, 944, 945, 948, 959, 961
QA2026X 915, 917, 923, 927, 930, 933, 958, 961
QA2028X 915, 917, 923, 927, 930, 933, 948, 958, 961
QA2030X 915, 917, 923, 927, 930, 933, 948, 958, 959, 960, 961, 962
QA2032X 915, 917, 923, 927, 930, 933, 958, 958, 959, 960, 961, 962
QA2034X 915, 917, 923, 927, 931, 933, 958, 958, 959, 960, 961, 962
QA2036X 915, 917, 923, 927, 931, 933, 958, 958, 959, 960, 961, 962
QA2038X 915, 917, 923, 927, 931, 933, 958, 958, 959, 960, 961, 962
QA2040X 915, 917, 923, 927, 931, 933, 958, 958, 959, 960, 961, 962
QA2042X 915, 917, 923, 927, 931, 933, 958, 958, 959, 960, 962
QA2060X 915, 917, 922, 925, 930, 932, 949, 958, 960
QA2062X 915, 917, 922, 925, 930, 932, 949, 958, 959, 961, 962
QA2064X 915, 917, 922, 925, 930, 932, 949, 958, 960, 962
QA2070X 915, 917, 922, 930, 932, 949, 958, 959, 961, 962
QA2072X 915, 917, 922, 925, 930, 949, 958, 959, 961
QA2074X 915, 917, 922, 930, 932, 949, 958, 959, 960, 962
QA2076X 915, 917, 922, 925, 930, 949, 958, 959, 961
QA2078X 912, 915, 917, 922, 925, 926, 930, 932, 949, 958, 959, 960, 961, 962
QA2080X 915, 917, 922, 925, 930, 949, 958, 959, 961
QA2082X 915, 917, 922, 926, 930, 932, 949, 958, 959, 960, 962
QA2084X 915, 917, 922, 926, 930, 932, 949, 958, 959, 960
QA2106R 915, 921, 958, 960
QA2124R 914, 920, 958, 961
QA2126R 914, 920, 958, 961
QA2128R 914, 920, 958, 961
QA2130R 914, 920, 958, 961
QA2148R 920, 929
QA2150R 920, 929
QA2154R 920, 929
QA2158R 920, 929
QA2171R 921, 929
QA2173R 921, 929
QA2175R 921, 929
QA2178R 921, 929
QA2182X 913, 918, 924, 927, 934, 935, 937, 938, 941, 942, 944, 945, 949, 961
QA2183X 914, 924, 928, 935, 936, 937, 939, 941, 943, 944, 946, 949, 961
QA2184X 913, 918, 924, 927, 934, 935, 937, 938, 941, 942, 944, 945, 949, 961
QA2185X 914, 924, 928, 935, 936, 937, 939, 941, 943, 944, 946, 949, 961
QA2186X 913, 918, 924, 928, 934, 935, 937, 938, 941, 942, 944, 945, 949, 961
QA2187X 914, 924, 928, 935, 936, 937, 939, 941, 943, 944, 946, 950, 961
QA2190R 916, 919, 921, 930
QA2192R 916, 919, 921, 930
QA2196R 916, 919, 921, 930
QA2200R 916, 919, 921, 930
QA2206X 912, 926, 940, 949, 961
QA2208X 912, 926, 940, 949, 961
QA2226R 912, 926
QA2234R 912, 926, 958, 961
QA2242R 911, 925
QA2248R 911, 925, 961
QA2270R 925, 961
QA2274R 925, 961
QA2828X 915, 917, 923, 927, 930, 933, 948
QA2830X 915, 917, 923, 927, 930, 933, 949
QA2832X 915, 917, 923, 927, 930, 933, 949
QA3080R 957, 961
QA3082R 957, 961
QA3084R 957, 961
QA3088R 957, 961
QA3114R 911, 957
QA3118R 911, 957
QA3122R 911, 957
QA3150R 911, 916, 921, 931, 957, 961, 962
QA3152R 911, 916, 921, 931, 957, 961, 962
QA3168R 911, 957

QA3170R 911, 957
QA3178R 911, 920, 931, 957, 961
QA3182R 920, 929
QA3184R 920, 929
QA3190R 957
QA3536R 962
QA3537R 962
QA3542R 962
QA3543R 962
QA3544R 962
QA3545R 962
QA3808R 922, 932, 961, 962, 978
QA3810R 922, 932, 961, 962, 978
QA3812R 961, 962
QA3814R 962, 978
QA3828X 940
QA3830X 940
QA3832X 912, 926, 940, 949
QA3906R 916, 931, 958, 959, 962, 977
QA3914R 916, 931, 958, 962, 977
QS1154X 913, 918, 924, 928, 934, 936, 937, 938, 941, 942, 944, 946, 954
QS3320S 939, 955
QS3321S 940, 955
QS3322S 939, 955
QS3323S 940, 955
QS3324S 939, 955
QS3325S 940, 955
QS3326S 939, 955
QS3327S 940, 955
QS3328S 939, 955
QS3329S 940, 955
QS5002X 913, 918, 924, 928, 934, 936, 937, 938, 941, 942, 944, 946
QS5003X 914, 924, 928, 935, 936, 939, 941, 943, 944, 946
QS5004X 913, 918, 924, 928, 934, 936, 937, 938, 941, 942, 944, 946, 953, 960, 963
QS5005X 914, 919, 924, 928, 935, 936, 937, 939, 941, 943, 944, 946, 953, 961, 963
QS5006X 913, 918, 924, 928, 934, 936, 937, 938, 941, 942, 944, 946, 953, 959, 963
QS5007X 914, 919, 924, 928, 935, 936, 937, 939, 941, 943, 944, 946, 953, 959, 963
QS5008X 913, 918, 924, 928, 934, 936, 937, 938, 941, 942, 944, 946, 953, 959, 963
QS5009X 914, 919, 924, 928, 935, 936, 937, 939, 941, 943, 944, 946, 953, 959, 963
QS5011X 919, 937, 953, 959, 963
QS5050X 913, 918, 924, 928, 934, 936, 937, 938, 941, 942, 944, 945, 952, 957, 959, 959, 961, 962
QS5052X 913, 918, 924, 928, 934, 936, 937, 938, 941, 942, 944, 946, 952, 957, 957, 958, 959, 961, 962, 962
QS5053X 957, 958, 959, 961, 962, 963
QS5054X 913, 918, 924, 928, 934, 936, 937, 938, 941, 942, 944, 946, 952, 957, 957, 958, 959, 962, 962
QS5055X 957, 958, 959, 959, 962
QS5056X 913, 918, 924, 928, 934, 936, 937, 938, 941, 942, 944, 946, 952, 957, 957, 958, 959, 962, 962
QS5057X 957, 958, 959, 962
QS5058X 952, 957, 958, 959, 959, 962
QS5059X 952, 957, 958, 959, 959, 962
QS5070X 957, 960, 961, 963
QS5071X 960, 961, 963
QS5072X 957, 958, 960, 961, 962, 963
QS5074X 957, 958, 960, 961, 962, 963
QS5075X 957, 958, 960, 961, 962, 963
QS5076X 957, 958, 959, 960, 961, 962, 963
QS5114X 916, 918, 923, 927, 931, 933, 952, 958, 959, 960, 962
QS5116X 916, 918, 923, 927, 931, 933, 952, 958, 959, 960, 962
QS5118X 916, 918, 923, 927, 931, 933, 952, 958, 959, 960, 962
QS5120X 958, 959, 960, 962
QS5122X 958, 959, 960, 962
QS5124X 958, 960, 962
QS5126X 958, 960, 962
QS5136X 912, 926, 940, 957, 957, 961
QS5138X 912, 926, 940, 957, 957, 961
QS5140X 957, 961
QS5142X 957, 961
QS5164X 915, 917, 922, 926, 930, 932, 951, 958, 959, 961, 962
QS5166X 915, 917, 922, 926, 930, 932, 951, 958, 959, 961, 962
QS5168X 915, 917, 922, 926, 930, 932, 951, 958, 961, 962
QS5170X 915, 917, 922, 926, 930, 932, 952, 958, 961, 962
QS5180R 915, 921, 951, 958, 960
QS5758X 913, 918, 924, 928, 934, 936, 937, 938, 941, 942, 944, 946, 954

QS5760X 913, 918, 924, 934, 936, 937, 938, 941, 942, 944, 946, 954
QS5862X 913, 918, 924, 928, 934, 954
QS5864X 913, 918, 924, 928, 934, 954
QS5866X 913, 918, 924, 928, 934, 954

#NUMERIC

-100 Antifreeze 312
100 Hour Service Kit 236, 237
103 Degree Tailpipe 211
10W30 . . . . . 255, 257, 258, 296, 297
10W40 308
10W40 Marine Engine Oil 294
14 Pin Extension Harness 607
15W40 . . . . . 266, 305
2.0L Diesel Rigging 567
2.5 Inch Spacer Kit 206
200 Dinghy 1036
20W40 308
20W50 309
220/240 Air Deck 1038
220/240 Roll-Up 1036
220/240 Sport Enduro 1036
220 Air Deck 1038
240 Air Deck 1038
240 Dinghy 1036
2-4-C Lubricant 323
2-4-C with grease gun 323
250/270 Adventure Sport 1037
250/270 Air Deck 1038
250/270 Sport Enduro 1037
250 Dynamic 1040
25W40 . . . . . 255–257, 296
25W40 Synthetic Blend 295
25W40 Synthetic Blend 4-Stroke Oil 257, 295
25W50 . . . . . 256, 295
25W50 High Performance oil 269
25W50 Synthetic Blend 270, 295
260 Dynamic 1040
270 Dinghy 1036
270 Dynamic 1040
280 Dynamic 1040, 1041
290/300 Ocean Runner 1041
290/310 Adventure Sport 1037
290/310 Air Deck 1038, 1039
290/310 Sport Enduro 1037
290 Ocean Runner 1042
2S Snowmobile Oil 309
2-Stroke PWC 309
300 Dynamic 1040
300 Hour Service Kit 236, 237
300 Ocean Runner 1042
310 Dynamic 1040, 1041
320/340 Adventure Sport 1037
320/340 Air Deck 1038
320/340 Sport 1037
340 Air Deck 1039
340 Ocean Runner 1041, 1042
350 M Series 1043
350 Verado Snorkel Kit 203
365/380 Heavy Duty 1039
400 M Series 1043
415/430 Heavy Duty 1039
420/430 Ocean Runner 1042
420 Ocean Runner 1042
430 Ocean Runner 1042
460 Ocean Runner 1042
470 Heavy Duty 1039, 1040
4 in 1 Gauge 426, 429
4-Stroke Outboard Oil 293
-50 Antifreeze 312
530 Heavy Duty 1040
570 M Series 1043
5W30 304
5W30 Marine Engine Oil 293
5W40 Oil 308
620 M Series 1043
80W90 Gear Lube 278

A

Accent Trim Top/Bottom 407
Active Trim 583, 584
Active Trim ECM Bracket 583
Active Trim Side Mount Adapter 583
Actuator Extension Harness 570, 578, 579
Actuator Kit 513, 729
Adapter 589, 610, 611, 693, 695, 696

Adapter Cable 555, 724
Adapter Cable Kit 555, 724
Adapter Cables 555
Adapter Crankcase 98, 339
Adapter Crankcase Oil Pump 98, 338
Adapter Drive Sleeve 1003, 1004
Adapter Dual Action Pump 1056
Adapter Fill Valve 1056
Adapter Gear Lube Pump 282, 322
Adapter Harnes Instrument 586, 601
Adapter Harness 501, 578, 586, 589, 592, 601, 606, 610, 611, 639
Adapter Harness Boat 590
Adapter Harness Quad 586, 602
Adapter Hose Oil Pump 339
Adapter Kit Cable 555
Adapter Kit Non Power Steering 214
Adapter Kit Transom 186
Adapter Male Female PB Male-Female PB 650
Adapter Plate Adhesive 330
Adapter Plate Engine Twin 703
Adapter Plate Sealant 333
Adapter Power Puge System 679, 683
Adapter Remote Tank 85, 86
Adapter Replacement 1055
Adapter Replacement Tank 92
Adapter Set 1056
Adapter Transom Kit 186
Adapter Universal Fill Valve 1056
Adapter Valve Fill 1056
Adapter Valve Fill Halkey-Roberts 1056
Adapter Valve Fill Universal 1056
Adhesive 333, 1052
Adhesive Bellows 330
Adhesive Pad 634
Adhesive Sealant 330
Adhesive Urethane 1054
Air Deck Floor System 1047, 1048
Air Filter 94, 233–235, 242, 243
Air Intake Spacer Kit 202
Air intake Tube Kit 129
Air Pump Pneumatic 136
Air System Floor Deck 1047, 1048
Air Valve Assembly Inflatable Boats 1056
Alcohol Tester 277, 314
Alignment Shaft 732
Altenator Belt 230
Alternator Belt 231, 233–235
Alternator Energy Kit 20
Altitude Gear Set 66
Aluminum Anode Kit 99, 101, 187, 188, 243
Aluminum Flywheel 200
Analog Conversion Kit Digital 453, 596
Analog Digital Conversion Kit 453, 596, 597
Analog Fitting Kit 500
Analog Gauge Interface 463
Analog Gauge Interface Kit 463
Analog Optimax Rigging Kit 454, 597
Analog Power Trim Sender 503
Analog Rigging Kit Optimax 454, 597
Anode . . . 100, 102–106, 189–193, 225, 231, 232, 235, 243
Anode, Engine 194, 242, 243
Anode, Heat Exchanger 194
Anode, Power Trim 104, 233
Anode Assembly 224
Anode Bearing Carrier 192, 193
Anode Driveshaft Housing 189, 190
Anode Gimbal Housing 189
Anode Housing Driveshaft 189, 190
Anode Housing Gimbal 189
Anode Kit 99, 101, 104, 187–189, 224, 226, 227, 243
Anode Kit Aluminum 99, 101, 187, 188, 243
Anode Kit Magnesium 101, 187, 188, 243
Anode Kit Prop Nut 105, 190, 1005
Anode Mercathode 98, 187
Anode Nut Prop Kit 105, 190, 1005
Anode Nut Prop Replacement 105, 190, 1005, 1006
Anode Plate 99–102, 187–189, 191, 192, 230, 233–235, 243, 1006, 1023
Anode Power Trim 100, 104, 230, 232–235
Anode Prop Nut Kit 105, 190, 1005
Anode Prop Nut Replacement 105, 190, 1005, 1006

Anodes 100, 193
Anode Side Pocket 100, 105, 230, 232–235
Anode Tab Trim 102, 103, 192, 231, 1023
Anode Trim Cylinder 193
Anode Trim Tab 102, 103, 192, 231, 1023
Antifreeze 274
Antifreeze Coolant 273, 311, 312
Antifreeze Plumbing 273, 274
Anti-Icing Carburetor Kit 89, 90
Aqua Seal 1054
Assembly Grease 324
Assembly Tailstock 208
Attaching Kit 705
ATV Oil, 5W40 308
Automatic Power Switch Assembly 665
Automotive Grease 284, 324
Axius Upgrade Kit 577

B

Bag Bow Kit 1049
Bag Storage Under-Seat 1049
Bag Under-Seat Storage 1049
Barrel Pump 338
Battery Cable 200
Battery Cable Kit 37, 645
Battery Charging Kit 24, 25
Battery Cover 645
Battery Isolator 646
Battery Isolator Harness Kit 646
Battery Plate 645
Bearing Anode Carrier 192, 193
Bearing Assembly Gear Pinion/Forward 66
Bearing Assembly Pinion/Forward Gear 66
Bearing Kit Gimbal 125, 216
Bearing Pinion/Forward Gear Assembly 66
Bell Housing Exhaust Bellows 243
Bellows Adhesive 330
Bellows Bulkhead Kit 219, 222, 558, 713
Bellows Kit Bulkhead 219, 222, 558, 713
Bellows Shift Cable 219, 243, 558
Bellows Steering Cable 221, 712
Bellows U-Joint 243
Belt, Altenator 230
Belt, Alternator 231, 233–235
Belt, Timing 232, 233
Belt Kit Serpentine 127, 158, 159
Belt Serpentine 128, 159, 238–242
Belt Serpentine Kit 127, 158, 159
Bezel
. . . . . 414, 422, 425, 429, 435, 450–452, 467, 472, 481, 489, 496–499, 515, 621, 633, 638, 697
Bezel, Mounting 693
Bezel Kit 221, 515, 523, 697, 712
Bezel Replacement 712
Bezel System Monitor 436
Bezel Trim Switch 638
Black Diamond Bravo Two 954, 955
Black Diamond Bravo Two Propeller 954
Black Diamond Propeller 948, 949, 954
Black Diamond Propeller Kicker 847
Black Key Cover Plastic 626
Black Max 848
Black Max Propeller 846–849
Black Paint 326
Black Paint Phantom 285, 327, 1032
Black Paint Propeller 287, 328, 1033
Black Propeller Paint 287, 328, 1033
Block Fitting 500
Block-Off Plate Exhaust 133
Block Water Pressure Digital 591
Blow-Start Siphon 78
Boat Cover 1044
Bolt Mounting 65
Boost Pump Kit 178
Bow Trim Harness 639
Bracket, Drop Down 143
Bracket Filter Kit 175
Bracket Filter Water Separating 84, 181
Bracket - Front Lifting Eye 161
Bracket Kit Filter 175
Bracket Steering 706, 709
Bracket Steering Arm 709

Bracket Steering Handle 56, 706
Bracket Tiller Handle 55
Bracket Transducer 592
Bravo 1 OC Propeller 863
Bravo I FS Propeller 862, 863
Bravo I Lab Finished Propeller 864
Bravo I Vented Lab Finished Propeller 863, 864
Bravo I XC Propeller 862
Bravo I XS Propeller 861, 862
Bravo Propeller 861, 868, 869
Bravo Three Diesel 870
Bravo Three Diesel Propeller 870
Bravo Three Propeller 870
Bravo Three XR Propeller 871
Bravo Two Propeller 954, 955
Bulb Assembly Primer 74
Bulkhead Compression Fitting 219, 221, 558, 713
Bulkhead Fitting 680
Bulkhead Kit Bellows 219, 222, 558, 713
Bullet Insulator Terminal Receptacle 648, 649
Bullet Receptacle Terminal Insulator 648, 649
Bullet Terminal 648
Bullet Terminal Receptacle 647, 648
Bushing 1005
Bushing Flo-Torq Hub Kit 998
Bushing Kit Flo-Torq Hub 998
Bushing Prop 1004
Bushing Prop Hub 1004
Button Cowl Mounted 39
Button Handle Tiller Harness 38
Button Harness Tiller Handle 38

C

Cable 544, 545, 547–549, 715, 716, 718–720
Cable, Steering 688, 693
Cable Adapter 555, 724
Cable Adapter Kit 555, 724
Cable Assembly Steering Pulley 203
Cable Attaching Kit Dual 707
Cable Attachment Steering 708, 709
Cable Battery 200
Cable Battery Kit 37, 645
Cable Grip Kit 513
Cable Replacement 696
Cable Rotary Dual System 691
Cable Rotary System 691
Cable Rotary System Dual 691
Cable Shift 218, 219, 556, 557, 725
Cable Shift Bellows 219, 243, 558
Cable Shift Connector 556
Cable Shift Kit 243
Cable Steering 221, 712
Cable Steering Assembly Pulley 203
Cable Throttle Connector 556
Cable Throttle Shift 220, 545–547, 549–553, 716–718, 720–724
Cable Tie 653
Cable Tie Standard 653
Camouflage Tan 327
CAN H Gateway 559
Cap Female Power Steering 669
Cap Kit Rotor 238–241
Cap Male Power Steering 668
Cap Non Vented 678, 683, 702
Cap Replacement 69, 223
Cap Rotor Kit 238–241
Carbon Fiber Dress Kit 214
Carburetor Anti-Icing Kit 89, 90
Carburetor Fuel Filter 238, 240, 241
Carburetor Kit Anti-Icing 89, 90
Carburetor Kit Repair 238, 240, 241
Carburetor Kit Wedge 157
Carburetor Repair Kit 238, 240, 241
Carburetor Wedge Kit 157
Carrier Bearing Anode 192, 193
CCM Module 577, 578
Charging Kit 24
Charging Kit Battery 24, 25
Check Valve Kit 184
Choke Harness 603
Choke Kit 86
Chopper II Propeller 873
Circuit Breaker 652

Circulating Hose Pump 168
Circulating Pump Hose 168
Clamps Fuel Line 78, 85, 181
Cleaner and Degreaser 335
Cleaner M.E.K. Patching Solvent 1052
Cleat Boat Handle 1049
Cleaver 3 Blade Propeller 875, 876
Clevis Kit 708
Clip Splice 649
Clip Trailering 36, 126
Close Couple Hardware Kit 211
Close Couple Tailpipe Kit 210
Closed Cooling Hose Kit 150, 151, 160, 161
Closed Cooling Kit 157, 158
Coil Kit Lighting 21
Coil Lighting Kit 21
Combustion Chamber Cleaner 276
Command Module 566
Complete Water Pump 234, 235
Compression Fitting Bulkhead 219, 221, 558, 713
Connection Hose - Fuel Tank 71
Connection Kit Hose 698–701
Connection Kit Steering Teleflex 697
Connector Cable Shift 556
Connector Cable Throttle 556
Connector Engine Flush Kit 169
Connector Engine Fuel End 77
Connector Flush Kit Engine 169
Connector Fuel 77
Connector Fuel Engine End 77
Connector Kit 77
Connector NMEA 2000 595
Connector Self-Stripping T-Tap 650
Connector Shift Cable 556
Connector Throttle Cable 556
Connector T-Tap Self-Stripping 650
Console Control Remote Mount 523, 524, 529
Console Mount Can Track Pad 517
Console Mount Remote Control 523, 524, 529
Continuity Washer 1018
Control 530–536
Control, Remote 522, 523
Control Drilling Fixture 731
Control Engine Remote Harness 39
Control Harness Remote 636
Control Harness Remote Engine 39
Control Lever Trim 537
Control Power Trim 637
Control Remote Attaching Kit 539–541
Control Remote Conversion Kit 218, 530, 538, 539
Control Remote Engine Harness 39
Control Side Mount Remote 218, 526–528, 530
Control Trim Lever 537
Control Unit Mercathode 187
Conversion Digital Analog Kit 453, 596
Conversion Gear Kit 205
Conversion Kit 524, 525
Conversion Kit, Remote Control 539
Conversion Kit Analog Digital 453, 596, 597
Conversion Kit Digital Analog 453, 596
Conversion Kit Remote Control 218, 530, 538, 539
Conversion Kit SC Sensor 453, 464
Conversion Kit Sideshift 57
Conversion Kit Tiller Handle 43, 44, 46
Conversion Remote Control Kit 218, 530, 538, 539
Conversion Sideshift Kit 57
Conversion Trim Sender 503
Converter - Voltage 582
Coolant 311, 312
Coolant Antifreeze 273
Coolant Sender Temperature 501
Coolant Temperature 414, 420
Coolant Temperature Sender 501
Cooler Pump Kit 710
Cool Fuel Relocation Kit 157
Co-Pilot Kit 55
Co-Pilot kit, Sail 55
Cord Lanyard 629
Corrosion Guard 272, 310
Cotter Pin 1014, 1015
Coupler Hose 128
Coupler Male 650
Coupler Propeller Shaft 185
Cover Black Plastic Key 626

Cover Hole Instrument Kit 507
Cover Prop 1031
Cover Racing CNC Prop 1031
Cowl 287
Cowl Fitting 56, 542
Crankcase Oil Pump 98, 338
Crimping Tool 649
Cruiselog Gauge 470, 475, 479, 483, 487, 491, 494
Cushion Seat 1046
Cylinder 662, 681
Cylinder Assembly 709
Cylinder Big Tiller 662
Cylinder Front Outboard Mount 698, 700
Cylinder Head 199
Cylinder Head O-Ring 200
Cylinder Hydraulic 674
Cylinder Seal Kit 703
Cylinder- Short Stroke 662

D

Dampener Hose 664, 667
Decal Mercury 227
Decal - Theft 633
Decal Washer Kit 616
Deck Fill Oil Kit 92
Deck Mount Kit - Trim Pump 210, 728
Degreaser and Cleaner 335
Depinning Tool 653
Depth/Speed/Temp Transducer Insert - Thru Hull 593
Depth Transducer Hull 593
Depth Transducer Transom Mount 592
DFI 2-Cycle Outboad Oil 290
DFI 2-Cycle Outboard Oil 290
Diesel DTS Helm Panel Kit 575
Diesel - Harness Fuel Level 581
Diesel Mechanical Helm Harness 568, 569
Diesel Oil 266, 305
Diffuser Ring 1006, 1007
Digital Analog Conversion Kit 453, 596, 597
Digital Control Zero Effort 517–519
Digital Depth / Temp Gauge 497
Digital Depth Gauge 467, 472, 480, 489, 495, 496
Dinghy 200 1036
Diode Kit 537, 538
Diode Kit Lanyard 628
Diode Lanyard Kit 628
Display 249
Display Easel 226
Diurnal Cap 71
Docking Station - TDS 633
Drain Exhaust Elbow Manifold 156
Drain Exhaust Manifold Elbow 156
Drain Kit Oil 176, 177
Drain Kit Seawater Hose 168
Drain Seawater Hose Kit 168
Dress Kit Carbon Fiber 214
Drill Fixture Kit 731
Drilling Transom Fixture 731
D-Ring 1050, 1051
D-Ring Lifting Handle 1050
D-Ring Stainless Steel 1050
Drive Adapter Sleeve 1003
Drive Bracket 673
Drive Installation Kit 243
Drive Kit 57
Driveline Hardware Kit 211
Driveline Kit 213
Driveline Tailpipe Kit 211
Driveshaft Assembly 217
Driveshaft Extension Kit 58, 59
Driveshaft Housing Anode 189, 190
Driveshaft Housing Assembly 202, 203
Driveshaft Kit 171, 172, 217
Drive Sleeve 997, 1003
Drive Sleeve Adapter 1003, 1004
Drive Spacer 206
Drive Spacer Kit 205
DTS Analog Gauge Harness 453, 463
DTS Console Dual 516
DTS Console Quad 516
DTS Console Triple 516
DTS Rigging Kit 215, 216
DTS Shadow Mode Quad RC Rigging Kit 562

DTS Slim Console Rigging Kit 561
DTS Tiller Handle Kit 48, 655
DTS Yacht Control Throttle 517
Dual Action Pump Valve Fill Adapters 1056
Dual Attaching Cable Kit 707
Dual Cable Attaching Kit 707
Dual Cable Rotary System 691
Dual Engine Mount Kit 528
Dual Engine Synchronizer 474, 478, 483, 487, 491, 494
Dual Engine Tie Bar 708, 711
Dual Rotary Cable System 691

E

Easel, Display 226
Elbow 669
Elbow/Riser Exhaust Kit 144
Elbow Exhaust Kit 144
Elbow Exhaust Manifold 156
Elbow Exhaust Manifold Drain 156
Elbow Fitting Power Steering 669
Elbow Intermediate Kit 133, 134, 144, 145, 152
Elbow Kit 134, 152
Elbow Kit, Intermediate 134, 135, 153–155
Elbow Kit Exhaust 144
Elbow Kit Intermediate 133, 134, 144, 145, 152
Electrical Hardware Kit 647
Electric Fuel Pump 202
Electric Start Kit 37, 38
Electrode Mercathode 99, 187
Electrode Mercathode Reference Tester 99, 187
End Steering Rod 221, 712
Enertia ECO Propeller 857
Enertia ECO XP Propeller 857, 858
Enertia Propeller 851
Engine and Fuel System Cleaner 315
Engine Anode 194, 242, 243
Engine Cleaner 275, 276
Engine Coolant 311, 312
Engine Cover 125
Engine End Fuel Connector 77
Engine Eye Lifting 733
Engine Eye Lifting Outboard 732
Engine Flush Kit 169
Engine Flush Kit Connector 169
Engine Front Mount 184
Engine Lifting Eye 733
Engine Lifting Eye Outboard 732
Engine Mount Front 184
Engine Mounting Fixture 731, 732
Engine Mount Kit Dual 528
Engine Oil 294
Engine Oil Pressure Sender 127, 636, 637
Engine Pressure Oil Sender 127, 636, 637
Engine SmartCraft Kit 454, 596
Engine Synchronizer Gauge 439
Engine Synchronizer -gauges 470, 474, 479, 483, 487, 491, 494
Engine Temperature Gauge 437, 443
Engine Temperature Water Sender 127, 501, 637
Engine Tie Bar Dual 708, 711
Engine Treatment 275, 315
Engine Water Temperature Sender 127, 501, 637
Ethanol Treatment 314
Exhaust Bellows Bell Housing 243
Exhaust Block-Off Plate 133
Exhaust Elbow/Riser Kit 144
Exhaust Elbow Kit 144, 151–154
Exhaust Elbow Manifold Drain 156
Exhaust Flange Kit 172
Exhaust Flappers 133
Exhaust Outlets 132, 207
Exhaust Pipe Kit 133, 135, 136, 144, 152, 155
Exhaust Plate Block-Off 133
Exhaust Reducer Kit 135
Exhaust Ring Seal 1004
Exhaust Tip Flapper Assembly 132, 208
Exhaust Tube 172
Extension Arm Steering Kit 708
Extension Harness 216, 508, 519, 520, 605, 635, 636
Extension Harness, WIF 82
Extension Harness Actuator 570, 578
Extension Harness Instrument 605, 606
Extension Harness Power Trim 643

Extension Harness Vessel Sensor 570, 580, 581
Extension Hose Kit 160, 175
Extension Kit 58–60
Extension Kit - Driveshaft 58, 59
Extension Kit Steering Arm 708
Extension Kit Trim Hose 212
Extreme Grease 284, 324
Extreme Performance Gear Oil 271, 320, 321

F

Fabric PVC 1054
Face Dial 496, 497, 499
FCW 255–258, 295–297
Fill Adapter Halkey-Roberts Valve 1056
Fill Adapter Universal Valve 1056
Filler Bottle Kit 703
Fill Kit Deck Oil 92
Fill Oil Hose 93
Fill Plug Helm 702
Fill Plug Helm Vented 702
Fill Valve Adapter 1056
Fill Valve Adapter Halkey-Roberts 1056
Filter, Air 94, 233–235
Filter, Fuel 83
Filter, Oil 95, 96, 231–235, 262, 263, 265, 299
Filter Bracket Kit 175
Filter Bracket Water Separating 84, 181
Filter Fuel 79, 80, 231–235
Filter Fuel Assembly 210
Filter Fuel Pump 238
Filter Fuel Separating 180–182, 238, 240–242
Filter Fuel Water Separating . . . 85, 180–183, 238, 240–242
Filter Kit, Water Separating 81
Filter Kit Bracket 175
Filter Kit Remote Oil 173, 174
Filter Oil 95–97, 234, 238–243, 263, 264, 267, 268, 298, 299, 303, 306, 307, 339, 340
Filter Oil Wrench 97, 263, 264, 339, 340
Filter Remote Oil Kit 173, 174
Filter Water Separating Fuel 180
Filter Wrench Oil 97, 263, 264, 339, 340
Fitting 184, 695
Fitting 680
Fitting - 90 degree 680, 681
Fitting Bulkhead 668, 680
Fitting Bulkhead Compression 219, 221, 558, 713
Fitting Cowl 56, 542
Fitting Hot Water Kit 129, 130
Fitting Kit Bulkhead 669, 680, 685
Fitting Kit Hot Water 129, 130
Fitting Power Steering Male to Male 669
Fitting Straight 668
Fitting - Tee 680, 681
Fixture Drilling Control 731
Fixture Drilling Transom 731
Fixture Drill Kit 731
Fixture Engine Mounting 731
Flagship Fuel Gauge 469
Flagship Instrument Set 465, 466, 471
Flagship Power Trim Gauge 470
Flagship Speedometer 466, 471
Flameless Heat Tool 650
Flange Kit Exhaust 172
Flappers Exhaust 133
Flat Washer 65
Floor System Air Deck 1047, 1048
Flo-Torq Bushing Hub Kit 998
Flo-Torq Hub 999
Flo-Torq Hub Kit 998–1002
Flo-Torq Hub Kit Solid 999
Flo-Torq Hub Kit Suzuki 1000, 1001
Flo-Torq Hub Kit Tohatsu 1001
Flo-Torq IV Hub Kit 998
Flo-Torq Reflex Hub Kit 997
Fluid Power Trim Steering 288, 329
Flush Connector Engine Kit 169
Flushing Attachment 67–70, 170, 204, 222
Flushing Kit 69, 70, 170, 204, 222
Flush Kit 69, 169
Flush Kit Engine Connector 169
Flush Kit Seal 68, 69, 170
Flush Mount Trim Pad 638

Flywheel Aluminum 200
Flywheel Puller 98, 200, 733
Fob - Controller TDS 633
Fogging Oil 272, 310
Foot Throttle Kit 515
Form-A-Gasket Loctite Sealant 333
Four Stroke High Performance Oil 269
Front Cylinder Outboard Mount 698, 700
Front Engine Mount 184
Fuel Additive 275, 276, 314–316
Fuel Assembly Filter 210
Fuel Assembly Line 72, 73
Fuel Care 275, 276
Fuel Connector 77
Fuel Connector End Engine 77
Fuel Demand Valve 71
Fuel Filter . . . 79, 80, 83, 179, 182, 230–235, 239, 241, 243
Fuel Filter, Water Separating 81–85, 178–180, 230, 235, 238–241
Fuel Filter Assembly 210
Fuel Filter Carburetor 238, 240, 241
Fuel Filter Kit 79, 80, 178, 179, 232
Fuel Filter Kit, Water Separating 81
Fuel Filter Pump 238
Fuel Filter Separating 180–182, 238, 240–242
Fuel Filter Water Separating 82–85, 179–183, 238, 240–242
Fuel Filter - Water Separating 180
Fuel Fitting, in-line 178
Fuel Flagship Gauge 469
Fuel Flow Gauge 415, 421, 438, 442, 444
Fuel Gauge 469, 474, 478, 482, 483, 486, 491, 494
Fuel Gauge Sending Unit 470, 474, 591
Fuel injection cleaner 334
Fuel Level Harness - Diesel 581
Fuel Line 74
Fuel Line Assembly 72–74
Fuel Line Clamps 78, 85, 181
Fuel Line Coupler 78
Fuel Line Fitting 84
Fuel Line Kit 160
Fuel Pump Electric 202
Fuel Pump Filter 238
Fuel Sabilizer 316
Fuel Separating Filter 180–182, 238, 240–242
Fuel Stabilizer 276, 316
Fuel System Treatment & Stabilizer 276, 316
Fuel Tank 70, 71
Fuel Tank Cap 71
Fuel Tank Connection Hose 71
Fuel Tank Hold Kit 1055
Fuel Treatment 275, 314
Fuel Water Separating Filter 180
Funnel Oil Drain 97, 263, 299
Fury 4 Propeller 854
Fury Propeller 854
Fuse 650–652, 663
Fuse, 10 amp 652
Fuse, 25 amp 651
Fuse, 2 amp 651
Fuse, 5 amp 651
Fuse/Harness Asy 663
Fuse Assembly 652, 663
Fuse Cover Asy 652, 663

G

G2 1000
Galvanic Isolator 186
Galvanic Isolator, Monitor 186
Gasket Remover, Loctite 334
Gasket Set 201
Gateway-Multi Engine 436
Gateway NMEA 2000 434
Gauge 1056, 1057
Gauge 4 in 1 426–429
Gauge Coolant Temperature 414, 417, 420
Gauge Cruiselog 470, 475, 483, 487, 491, 494
Gauge Digital Depth 467, 472, 480, 489, 495, 496
Gauge Digital Depth/Temp 497
Gauge Dual Engine Synchronizer 469, 474, 478, 483, 487, 491, 494
Gauge Engine Synchronizer 439
Gauge Engine Temperature 437, 443
Gauge Flagship Fuel 469
Gauge Flagship Power Trim 470

Gauge Flow Fuel 415, 421, 438, 442, 444
Gauge Fuel Flagship 469
Gauge Fuel Flow 415, 421, 438, 442, 444
Gauge Fuel Level 415, 420, 438, 449
Gauge Fuel Level 2 . . . . . 415, 418, 421
Gauge Fuel Sending Unit 470, 474, 591
Gauge Fuel Unit Sending 470, 474, 591
Gauge Level Fuel 438, 449
Gauge Level Oil 438, 444
Gauge Level Waste 439, 445
Gauge Level Water 439, 445
Gauge Light Warning 507, 508
Gauge Multifunction 441, 447, 450
Gauge Oil Level 420, 438, 444
Gauge Oil Pressure 415, 416, 418, 419, 421, 437, 438, 442, 444, 449, 469, 474, 478, 482, 486, 490, 494
Gauge Oil Temperature 417, 420, 422, 437, 442, 443
Gauge Power Trim 470, 474, 478, 483, 491
Gauge Power Trim Flagship 470
Gauge Power Trim QSS 495
Gauge QSS Power Trim 495
Gauge Rudder 439, 442, 444, 449
Gauge Rudder Angle 416, 419, 422
Gauge SC1000 Speed 411
Gauge SC1000 Tach 412
Gauge Seal 453
Gauge Sending Unit Fuel 470, 474, 591
Gauge Speed 409–411, 413, 423–425, 427, 428
Gauge Synchronizer Engine 439
Gauge Tach 410, 412, 413, 424–427, 429
Gauge Tachometer 423, 424
Gauge Temperature 485
Gauge Trim 416, 419, 421
Gauge Voltage 414, 417, 420
Gauge Waste Level 415, 418, 421
Gauge Water Level 415, 418, 421
Gauge Water Pressure 416, 419, 422
Gear Actuator Harness 579
Gearcase Canister Kit Outboard 204
Gearcase Drain Seal 282
Gearcase Kit Outboard Canister 204
Gear Conversion Kit 205
Gear Extension Harness Actuator 578
Gear Harness Actuator 578
Gear Housing Outboard 66, 67
Gearhousing Replacement Skeg 94, 1027
Gear Lube 279, 280, 317–319
Gear Lube Monitor Kit 126
Gear Lube Pump 280, 282, 319, 322
Gear Lube Pump Adapter 282, 322
Gear Lube Reservoir Kit 126
Gear Oil, Extreme Performance 271, 320, 321
Gear Pinion/Forward Assembly Bearing 66
Gear Pinion/Forward Bearing Assembly 66
Gear Set Altitude 66
Gimbal Bearing Kit 125, 216
Gimbal Housing Anode 189
Glue 1052
Glue PVC 1052
Glue Quick Titl Super Gel 331
GPS 595
GPS Antenna 559, 595
GPS Antenna NMEA 2000 . . . . . 595, 596
GPS Extension Harness 595
Graphite Paint 286, 326
Grate Inlet Replacement 223
Grate Replacement Inlet 223
Grease 284, 324
Grease Gun 339
Grommet 223
Grommet - Ingress 541
Guide Starter Rope 89

H

Halkey-Roberts Fill Valve Adapter 1056
Halkey-Roberts Universal Valve Tool 1056
Halkey-Roberts Valve 1055, 1056
Handle Kit Tiller 42–47
Handle Lifting D-Ring 1050
Handle Steering Bracket 56, 706
Handle Tiller Bracket 55

Hardware Bag 566
Hardware Kit Close Couple 211
Hardware Kit Driveline 211
Harness
. . . 586, 590, 601–603, 610, 617, 618, 639, 644, 664, 665
Harness, Data 605–607
Harness Actuator 579
Harness Adapter 570, 581, 591, 606, 610, 611
Harness Adapter Halon 581
Harness Assembly 25, 519, 540, 579, 612, 616
Harness Engine Remote Control 39
Harness -Engine to Helm 598
Harness Extension
. . . . . .
216, 508, 519, 520, 526, 586, 601, 603, 605, 619, 635, 636
Harness Extension 14 Pin 607
Harness Extension Instrument 605, 606
Harness Extension Power Trim 643
Harness Extesion- Engine to VIP 580
Harness Keyswitch Extension 571
Harness Kit 612, 613
Harness Kit, Battery Isolator 646
Harness Kit -Drive Application 579
Harness Link 589
Harness Main Helm 577, 581
Harness Malfunction Light 604
Harness MerCathode 579
Harness MP Alert 510
Harness Paddle Wheel 599
Harness Power Trim 636
Harness Power Trim Extension 643, 644
Harness Remote Control 636
Harness SC100 . . . . . 586, 587, 602
Harness SC1000 . . . . . 588, 609
Harness SC1000-2RSL 588, 608, 609
Harness SC1000R 588, 589, 609
Harness SC1000 System Speedometer 585, 601
Harness SC1000 System Tachometer 585, 601
Harness SC5000 . . . . . 587, 608
Harness SC5000R 587, 588, 608
Harness Skyhook 579
Harness Speedometer System SC1000 . . . . . 585, 601
Harness Speedo-Pitot 598
Harness Tachometer 635
Harness Tank 590
Harness - TDS 633
Harness Transom 599
Harness Vessel Sensor Inboard 580
Harness Vessel Sensor Sterndrive 580
Harness Y Station 636
Head Cylinder 199
Head Cylinder O-Ring 200
Head O-Ring Cylinder 200
Heat Exchanger Anode 194
Heat Shrink Tubing 649
Heat Tool Flameless 650
Heat Transfer Compound 330
Heavy Duty Hydraulic Cylinder 676
Heavy Duty Tie Bar-Dual 670
Helm 659–661
Helm, Steering 694, 695
Helm/Cylinder Kit 675
Helm Board DTS Kit 565, 566
Helm Hyd Std 675
Helm Hyd Tilt 675
Helm Kit Engine 411, 414
Helm Kit- Includes Cylinder And Hoses 677
Helm Kit-Mechanical SmartTow 597
Helm Kit Plate SeaStar 698, 700
Helm Kit SeaStar Plate 698, 700
Helm Kit Tach/Speed 410–414, 447
Helm Mount SeaStar 698, 700
Helm panel 559
Helm Panel Board, Cummins DTS 576
Helm Panel Kit 575, 576
Helm Pump 676, 677, 681, 682, 701, 702
Helm Tach/Speed Kit 410–414, 447
Helm Vented Cap 678, 682, 683, 702
HighFive Propeller 860
High Performance Gear Lube 280
High Performance Oil, Four Stroke 269
High Performance Oil, Two-Stroke 269
Hold Kit Fuel Tank 1055
Hold Kit Oil Tank 91

Horn Kit Warning 508
Horn Warning Kit 508
Hose 667
Hose Adapter Oil Pump 339
Hose and Fitting Kit Second Station 695, 702
Hose Circulating Pump 168
Hose Clamp 78
Hose Connection Kit 698–701
Hose Coupler 128
Hose Drain Kit Seawater 168
Hose End Threaded 74, 75, 84, 181
Hose Extension Kit 160, 175
Hose Extension Oil Tank 91
Hose Hydraulic 677, 678, 701, 702
Hose Kit 150, 151, 160, 161, 500, 666, 667
Hose Kit Connection 698–701
Hose Kit Extension 160, 175
Hose Kit Joystick 560, 669, 670
Hose Kit K-Planes 729
Hose Kit Pro SeaStar 700
Hose Kit Rigging 203
Hose Kit SeaStar 698
Hose Kit SeaStar Pro 700
Hose Kit Seawater Drain 168
Hose K-Plane 729, 730
Hose Oil Fill 93
Hose Power Steering Dampener 664, 667
Hose - Return 710, 711
Hose Rigging 56, 542
Hose Rigging Kit 203
Hose SeaStar Kit 698
Hose SeaStar Kit Pro 700
Hose SeaStar Pro Kit 700
Hose Seawater Drain Kit 168
Hose Threaded End 74, 75, 84, 181
Hot Water Fitting Kit 129, 130
Hour Meter 507
H Series Propeller 872, 873
Hub Bushing Flo-Torq Kit 998
Hub Bushing Kit Flo-Torq 998
Hub Bushing Prop 1004
Hub Flo-Torq Bushing Kit 998
Hub Flo-Torq Kit 998–1002
Hub Flo-Torq Kit Evinrude 1000
Hub Flo-Torq Kit Suzuki 1000, 1001
Hub Flo-Torq Kit Tohatsu 1001
Hub Flo-Torq Reflex Kit 997
Hull Transducer Depth 593
HX Series Propeller 873
Hydraulic and Power Steering Cylinder 661, 681
Hydraulic Bolt On Steering Kit 682
Hydraulic Fluid 329
Hydraulic Fluid, SeaStar 329, 683
Hydraulic Helm Steering Fluid 329, 683
Hydraulic Hose 701
Hydraulic Hose Kit 666
Hydraulic Pump 728
Hydraulic Steering Arm 678, 683
Hydraulic Steering Remote Fill Kit 678, 683
Hypalon Repair Kit 1052, 1053

I

Idle Relief Outlet Side Discharge 212
Idle Relief Outlet Transom Discharge 211, 212
Ignition Key Replacement 623–626
Ignition Keyswitch Transom Mounted 39, 40, 619
Ignition Kit 20
Ignition Mounted Keyswitch Transom 39, 40, 619
Ignition Replacement Key 623–626
Impeller 232, 233
Impeller Kit 231, 242, 243
Impeller Outboard Jet 1028, 1029
Impeller Pump Kit 231, 238–242
Impeller repair kit 231
Impeller SportJet 1029, 1030
Impeller Water Pump 230–235
IMU 559
Indicator Trim Position 511–513, 726, 727
Inflator/Deflator 1055
Ingnition Key 624
Injection Engine Oil 251, 290
Inlet Grate Replacement 223
Inlet Replacement Grate 223

Inlet Water 70
Inline Fuel Filter 80, 232
In-Line Oil Filter 230
Installation Kit, Drive 243
Instrument Extension Harness 605, 606
Instrument Harness 603
Instrument Harness Extension 605, 606
Instrument Hole Cover Kit 507
Instrumention Primary Station 499
Instrument Set 465, 466, 470, 471, 475, 479, 483, 491
Instrument Set Analog 487
Insulator Receptacle Bullet Terminal 648, 649
Intake Air Kit Spacer 202
Intake Air Spacer Kit 202
Interface Kit Analog Gauge 463
Interface Kit Trim Tab 599
Intermediate Elbow Kit 134, 135, 153–155
Iridium Anatenna 634
Isolator, Galvanic, Monitor 186
Isolator Battery 646
Isolator Galvanic 186
Isolator kit 582
Isolator Kit Opti Triple 647, 665
Isolator Starter Cable 646

J

Jackplate Harness 613
Jackshaft Kit 171
Jackshaft Kit Main 170, 171
J-Box Extension 634
J-Box SmartCraft Terminator/Resistor 585, 632
Jet Outboard Impeller 1028, 1029
Johnny Throttle Extension Harness 569
Joiners Side 1048
JP OptiMax 253
Junction Box SmartCraft 584, 631

K

Key Assembly Switch 222, 613, 614, 616, 617
Key Cover Black Plastic 626
Key Ignition Replacement 623–626
Key Ingnition 624
Key Replacement Ignition 623–626
Key Switch 614, 615, 617, 621–623
Key Switch Assembly 222, 613, 614, 616, 617
Key Switch-Dual 615, 621
Key Switch Housing Kit 616
Keyswitch Ignition Transom Mounted 39, 40, 619
Key Switch Kit 582
Key Switch-Quad 615
Key Switch-Triple 615
Kicker Bracket 673
Kicker Engine Bracket 673
Kicker Propeller Black Diamond 847
Kit M8 Prop Aerator 212
K-Plane Harness 600
K-Plane Hose 729, 730
K-Planes Hose Kit 729
K-Plane Sport 728

L

Lacing 1044
Lanyard Cap Stop Switch 628, 629
Lanyard Cord 629
Lanyard Counter Display Kit 629
Lanyard Diode Kit 628
Lanyard Stop Switch 626–630
Laser Propeller 855
LED Light and Switch Kit 50, 657
Leveler 287, 328
Lifting Eye 98, 732, 733
Lifting Eye Engine 733
Lifting Handle D-Ring 1050
Light and Switch Kit LED 50, 657
Light Harness 21
Lighting Coil Kit 21
Lighting Regulator 21
Lighting Regulator Kit 21
Lightning E.T. Propeller 874
Link Harness 589
Link Rod Steering 706
Liquid Gasket 333

Lock Kit 35
Loctite 330, 336
Loctite 22221 335
Loctite 222MS Threadlocker 335
Loctite 22423 332
Loctite 232532 336
Loctite 243 335
Loctite 27105 336
Loctite 271 Threadlocker 336
Loctite 409 330
Loctite 510 332
Loctite 518 332
Loctite 58730 332
Loctite 680 331
Loctite 79040 334
Loctite Flange Sealant 332
Loctite Form-A-Gasket Sealant 333
Loctite Gasket Remover 334
Loctite Insulating Wrap 331
Loctite Master Gasket 332
Loctite Primer 331, 334
Loctite PST Pipe Sealant 336
Loctite RTV Silicone Sealant 332
Loctite Tape 336
Loctite Thread Locker 335, 336
Loctite Wrap 331
Lower Unit Oil 319
Low Oil Warning Kit 507
Lube, Gear 280
Lube Pump 280, 319, 322
Lubricant PTFE 283, 1032

M

M.E.K. Cleaner Solvent Patching 1052
M8 Prop Aerator Kit 212
Machete Propeller 845
Magnesium Anode Kit 101, 187, 188, 243
Main Jackshaft Kit 170, 171
Male Coupler 650
Male Quick Disconnect 650
Manifold Exhaust Elbow 156
Marine Engine Oil 256, 294, 295
Maximus Long Tube Lab Finished Propeller 866, 867
Maximus Propeller 865
Maximus Short Tube Lab Finished Propeller 867, 868
Maximus ST Propeller 865, 866
Mechanical Tiller 48, 49, 655, 656
Mercathode 186, 210
Mercathode Anode 98, 187
Mercathode Control Unit 187
Mercathode Electrode 99, 187
Mercathode Kit 98, 186, 187, 210
Mercathode Reference Electrode Tester 99, 187
MercMonitor 434
Mercury High Performance 269
Mercury Premium -Theft 633
Metallic Paint 286
M-Icon 227, 228
Mil Light 604
Mirage Plus Propeller 856, 857
Module - Controller TDS 633
Module MP Alert 510
Module TDS 634
Monitor Galvanic Isolator 186
Monitor Kit, Gear Lubricant 126
Monitor SC1000 SmartCraft System 435
Monitor Station Panel Primary 464
Motorcycle Oil 308, 309
Mounting Bezel 693
Mounting Bolt 65
Mounting Bracket Pump 30
Mounting Engine Fixture 731
Mounting Nuts 66
MP Alert Kit 508, 509
MP Alert Light 510
MP Alert Y- Harness 510
MP Light 509
MP Light + Y-Harness 510
Muffler 224
Muffler Kit X-Haust 211
Multi-Fuel, Two Stroke Oil 253
Multifunction Gauge 441, 447, 450
MUS ID Jumper 579

N

Needle Bearing Assembly Grease 324
NEMESIS 951
Nemesis Pontoon Propeller 950
Nemesis Propeller 950
Neoprene Liquid 330
NMEA 2000 596
NMEA 2000 Power 595
NMEA 2000 Weather Cap 596
Non Power Steering Adapter Kit 214
Nut 1012
Nut Anode Prop Kit 105, 190, 1005
Nut Anode Prop Replacement 105, 190, 1005, 1006
Nut Brass Hex 66
Nut Kit Prop 1010
Nut Prop 1011–1013
Nut Retaining 429, 452, 453
NXT1 Spacer Kit 206
NXT1 Torpedo Bore Cover Assembly 214

O

Oar 1058, 1059
Oar Blade 1058
Oar Blade Black 1058
Oar Handle 1058
Oar Handle Assembly 1058, 1059
OBDM adapter harness 604
Oil 255–258, 288, 296, 297, 664
Oil, Outboard 293
Oil Crankcase Pump 98, 338
Oil Deck Fill Kit 92
Oil Diesel 266, 305
Oil Drain Funnel 97, 263, 299
Oil Drain Kit 176, 177
Oil Drip Tray 95, 262, 340
Oil Engine 256, 294
Oil Engine Pressure Sender 127, 636, 637
Oil Extension Hose Tank 91
Oil Fill Deck Kit 92
Oil Fill Kit Deck 92
Oil Filter 95–97, 231–235, 238–243, 262–265, 267, 268, 298, 299, 303, 306, 307, 339, 340
Oil Filter - Axius Hydraulic 265
Oil Filter - Diesel 268, 307
Oil Filter In-Line 230
Oil Filter Remote Kit 173, 174
Oil Filter - Transmission 265
Oil Filter Wrench 97, 263, 264, 339, 340
Oil Hose Extension Tank 91
Oil Hose Fill 93
Oil Kit Drain 176, 177
Oil Level Gauge 417, 422, 469, 474, 478, 482, 486
Oil Optimax/DFI Outboard 251
Oil Outboard 255, 294
Oil Outboard Premium TC-W3 . . . . . 252, 291
Oil Outboard TC-W3 Premium 252, 291
Oil Premium Outboard TC-W3 . . . . . 252, 291
Oil Premium Plus 251, 252, 290, 291
Oil Pressure Gauge 437, 438, 442, 444, 449, 469, 474, 478, 482, 486, 490, 494
Oil Pressure Sender 502, 507
Oil Pressure Sender Engine 127, 636, 637
Oil Pressure Sender Kit 482, 486, 490, 494, 502
Oil Pressure Sensor Kit 502, 591
Oil Pump Crankcase 98, 338
Oil Pump Hose Adapter 339
Oil Remote Filter Kit 173, 174
Oil Remote Tank 90, 91, 455, 597
Oil Remote Tank Kit 90, 455
Oil Sender Engine Pressure 127, 636, 637
Oil Sender Kit Pressure 482, 486, 490, 494, 502
Oil Sender Pressure 502, 507
Oil Sender Temperature 198
Oil Tank Extension Hose 91
Oil Tank Hold Kit 91
Oil Tank Hose Extension 91
Oil Tank Remote 90, 91, 455, 597
Oil Tank Remote Kit 90, 455
Oil Temperature Gauge 437, 442, 443

Oil Temperature Sender 198
Oil Warning Light 507
OptiMax Oil 253
O-Ring Cylinder Head 200
O-Ring Fill Cap 92
O-Ring Head Cylinder 200
Outboard Cylinder Front Mount Pivot 698, 700
Outboard Motor Lock 634, 635
Outboard Oil 270, 295
Outboard Stabilizer Clip 50, 657

P

P/S Helm Kit 658
Paint 286, 287, 326, 328
Paint Black 326
Paint Black Phantom 285, 327, 1032
Paint Black Propeller 287, 328, 1033
Paint Camouflage 327
Paint Cold Fusion 285
Paint Graphite 286, 326
Paint Light 286, 326
Paint Metallic 286
Paint Phantom Black 285, 327, 1032
Paint Propeller Black 287, 328, 1033
Paint Silver 286, 326
Paint Warm Fusion 285
Panel Boat Harness 202
Panel Mount Control DTS 515
Patching Solvent M.E.K. Cleaner 1052
PCV Valve 238–242
Perfect Seal 330
Pickup Seawater 183
Pickup Speedometer 499
Pickup Speedometer Kit 499
Pickup Speedometer Tubing 499, 500
Pipe Kit Exhaust 133, 135, 136, 144, 152, 155
Pipe Plug 85
Pitot/Speed Sensor Kit 593, 594
Pitot Sensor 464, 500, 594
Pitot Sensor Kit 594
Plug Asy 585, 632
Plug Wrench/Screw 1030
Pneumatic Air Pump 136
Portable Fuel Tank 70, 71
Poweer Steering Kit 659
Poweer Trim Kit 644
Power Harness 570, 580, 612, 634
Power Relay Harness 559, 581
Power Relay Harness-Dual Helm 559
Powersports Grease 284, 324
Power Steering Cylinder 662
Power Steering Kit 214, 657, 659, 709
Power Steering Module 662, 663
Power Steering Primer Module 665
Power Steering Reservoir Kit 215
Power Steering Trim Fluid 288, 329
Power Switch Assembly Automatic 665
Power Trim Anode 100, 104, 230, 232–235
Power Trim Cable 644
Power Trim Control 637
Power Trim Control Panel 637, 641
Power Trim Extension Harness 643
Power Trim Gauge 470, 474, 478, 483, 491
Power Trim Gauge Flagship 470
Power Trim Gauge QSS 495
Power Trim Harness 636
Power Trim Harness Extension 643
Power Trim Harness Kit 539
Power Trim Kit 28, 29
Power Trim Kit Switch 30, 641, 642
Power Trim Kit Tilt 29
Power Trim Panel Control 637, 641
Power Trim QSS Gauge 495
Power Trim Sender 502, 503, 591
Power Trim Steering Fluid 288, 329
Power Trim Switch Kit 30, 641, 642
Power Trim Tilt Kit 29
Power Tune 276, 316
Power Tune Cleaner Engine 316
Power Tune Engine Cleaner 276
Preliminary Shift Tool 732
Pressure Sender Engine Oil 127, 636, 637
Pressure Sender Kit Oil 482, 486, 490, 494, 502

Pressure Sender Oil 502, 507
Pressure Sender Oil Engine 127, 636, 637
Pressure Sender Oil Kit 482, 486, 490, 494, 502
Pressure Transducer Kit 594
Primary Station Instrumentation 499
Primary Station Instumentation 499
Primer Bulb Assembly 74
Primer Light Gray 286, 328
Primer Loctite 331, 334
Primer Module, Power Steering 665
Pro E.T.® Propeller 874
Pro Helm SeaStar 699
Pro Helm SeaStar Tilt 699
Pro Max® Propeller 875
Prop Anode Nut Kit 105, 190, 1005
Prop Anode Nut Replacement 105, 190, 1005, 1006
Prop Bushing 1004
Prop Bushing Hub 1004
Prop Cover 1031
Propeller 851, 858–860, 863–868, 870–876
Propeller 859
Propeller Alpha 851
Propeller Black Diamond 948, 949
Propeller Black Diamond 4 . . . . . 949, 950
Propeller Black Max 846–848
Propeller Bravo 861, 868, 869
Propeller Bravo 1 OC 863
Propeller Bravo I FS 862, 863
Propeller - Bravo I Lab Finished 864
Propeller Bravo I OC 863
Propeller - Bravo I Vented Lab Finished 863, 864
Propeller Bravo I XC 862
Propeller Bravo I XS 861, 862
Propeller Bravo Three Diesel 870
Propeller - Bravo Three Diesel 870
Propeller - Bravo Three XR 871
Propeller - Chopper II 873
Propeller - Cleaver 3 Blade 875, 876
Propeller Coupler Shaft 185
Propeller Enertia 851
Propeller Fury 854
Propeller Fury 4 854
Propeller HighFive 860
Propeller Laser 855
Propeller - Lightning E.T. 874
Propeller Machete 845
Propeller - Maximus Long Tube Lab Finished 866, 867
Propeller - Maximus Short Tube Lab Finished 867, 868
Propeller Maximus ST 865, 866
Propeller Mirage Plus 856, 857
Propeller M-Series 872
Propeller Nemesis 950, 951
Propeller Nemesis Pontoon 950
Propeller Paint Black 287, 328, 1033
Propeller - Pro E.T.® 874
Propeller - Pro Max® 875
Propeller QST 5 954
Propeller - Revolutiion 4 XP Pro Finished 859
Propeller Revolution 858
Propeller - Revolution 4 Lab Finish 859, 860
Propeller - Revolution 4 XC 858
Propeller - Revolution 4 XP Pro Finished 859
Propeller - Revolution 4 XP Pro Finished 859
Propeller - Revoution 4 XP Pro Finished 859
Propeller Shaft Coupler 185
Propeller Silverado 951, 952
Propeller Spitfire 850
Propeller Spitfire CT 850
Propeller Tempest Plus 854
Propeller Thunderbolt 955, 956
Propeller Thunderbolt IPS 956
Propeller Torrent 954
Propeller Trophy Plus 855
Propeller Trophy Sport 856
Propeller Vengeance 852, 853
Prop Grease 323
Prop Hub Bushing 1004
Prop Kit Anode Nut 105, 190, 1005
Prop Kit Nut 1007–1012, 1015
Prop Kit Nut Anode 105, 190, 1005
Prop Kit Reverse 1005
Prop Nut 1011–1013
Prop Nut Anode Kit 105, 190, 1005
Prop Nut Anode Replacement 105, 190, 1005, 1006

Prop Nut Kit 1010
Prop Replacement Anode Nut 105, 190, 1005, 1006
Prop Reverse Kit 1005
Propshaft Kit 199, 217
Prop Slip Calculator 1030
Prop Stow 1031
Prop Stow-Large 1031
Prop Wrench 1030, 1031
Puller Flywheel 200
Pulley Cable Steering Assembly 203
Pump Adapter Hose Oil 339
Pump Barrel 338
Pump Circulating Hose 168
Pump Fuel Electric 202
Pump Fuel Filter 238
Pump Gear Lube 280, 282, 319, 322
Pump Hose Circulating 168
Pump Hydraulic 728
Pump Impeller Kit 231, 238–242
Pump Impeller Water 230–235
Pump Kit, Boost 178
Pump Kit Cooler 710
Pump Kit Impeller 231, 238–242
Pump Kit Repair Water 230
Pump Kit Seawater 159, 160
Pump Kit Trim 203
Pump Oil Crankcase 98, 338
Pump Oil Hose Adapter 339
Pump Pneumatic Air 136
Pump Repair Kit Water 230
Pump Seawater Kit 159, 160
Pump Water 230, 232–235
Pump Water Impeller 230–235
PVC Fabric 1054
PVC Glue 1052
PVC Repair Kit 1053
PWC 2-Stroke 309

Q

Q3 952
Q3 Propeller 952
Q4 953
Q4 Propeller 953
QSS Gauge Power Trim 495
QSS Power Trim Gauge 495
QSS Speedometer 494
QSS Voltmeter 495
QST 5 954
Quickare 275, 314
Quick Disconnect 650
Quick Disconnect End 75–77
Quick Disconnect Male 650
Quickguard 315
Quickleen 275, 315
Quickstor 276, 316
Quick Tite Super Glue Gel 331

R

Race CommonTransom Plate Assembly 212
Racing CNC Prop Cover 1031
Racing Gear Lube 271
Rack Cable Mount System 689
Rack Mount Cable System 689
Rack Steering System 686, 687
Rack System Cable Mount 689
Reed Valves Plastic 201
Reference Electrode Mercathode Tester 99, 187
Regulator/Rectifier Voltage Kit 20
Regulator Lighting 21
Regulator Lighting Kit 21
Regulator Voltage Kit 20
Rejuvenate 269
Relay Harness Kit 613
Relay Kit 613
Remote Control 516, 521–523, 564, 565
Remote Control, Panel Finger Release 522
Remote Control Attaching Kit 539–541
Remote Control Console Mount 523–525, 529
Remote Control Conversion Kit 218, 530, 538, 539
Remote Control Engine Harness 39
Remote Control Harness 636
Remote Control Side Mount 218, 526–528, 530

Remote Control Spacer Plate 528
Remote Dash Pad-SmartTow 517
Remote Oil Filter Kit 173, 174
Remote Oil Tank 90, 91, 455, 597
Remote Oil Tank Kit 90, 455
Remote Tank Adapter 85, 86
Repair Kit 1052
Repair Kit Carburetor 238, 240, 241
Repair Kit Hypalon 1053
Repair Kit Impeller 231, 232
Repair Kit Pump Water 230
Repair Kit PVC 1053
Repair Kit Water Impeller 231
Repair Kit Water Pump 230
Repair Pump Kit Water 230
Repair Pump Water Kit 230
Replacement Skeg 94
Reservoir Kit, Gear Lube 126
Reservoir Kit Power Steering 215
Reservoir Relocation Kit 127
Resistor Assembly - Shadow Mode 631
Resistor Pack 630
Resistor Termination 2 Pin 585, 632
Retainer Wrench 217
Retaining Nut 429, 452, 453
Retaining Ring 1005
Reverse Gear 66, 67
Reverse Kit Prop 1005
Revolution 4 Lab Finish Propeller 859, 860
Revolution 4 XC Pro Finished 858
Revolution 4 XC Propeller 858
Revolution 4 XP Pro Finished Propeller 859
Revolution 4 XP Pro Finsihed Propeller 859
Rigging Hose 56, 542
Rigging Hose Kit 203
Rigging Kit . . 56, 203, 208, 209, 541, 561, 562, 597, 598, 659
Rigging Kit Analog Optimax 454, 597
Rigging Kit DTS Shadow Mode Quad RC 562
Rigging Kit Hose 203
Rigging Kit Optimax 454, 596
Rigging Kit Optimax Analog 454, 597
Ring Diffuser 1006, 1007
Ring Exhaust Seal 1004
Ring Terminal 648–650
Ring Vent Control 1005
Riser Hose Kit 141, 142, 160, 161
Riser Installation Kit 138, 142, 143, 150
Riser Kit 136–140, 144, 149, 150
Rope Guide Starter 89
Rope Starter Guide 89
Rotary Cable System 691
Rotary Cable System Dual 691
Rotary Steering System 692
Rotary System Cable 691
Rotor Cap Kit 238–241
Rotor Kit 592
RTV Silicone Sealant 332
Rubber Hub 1024–1026
Rudder Gauge 439, 442, 444, 449
Rudder Sensor 665
Rust Inhibitor 272, 310

S

SAE 85W90 Gear Oil 271, 320, 321
SAE 90 Gear Lube 280, 319
SC1000 Harness 588, 609
SC1000 Harness Speedometer System 585, 601
SC1000 Harness Tachometer System 585, 601
SC 1000 Speedometer 441
SC100 Harness 586, 587, 602
SC100 Speedometer System Link 423, 424, 428, 440, 443, 446, 447, 450
Screen 80
Seal 1054
Seal, Gearcase Drain 282
Sealant 333
Sealant Adhesive 330
Sealant Form-A-Gasket Loctite 333
Sealant Loctite Form-A-Gasket 333
Sealant RTV Silicone 332
Seal Compound 334
Seal Exhaust Ring 1004
Seal Flush Kit 68, 69, 170
Seal Kit 66, 67, 243, 708

Seal Kit Bearing Bearing 67
Seal Kit Cylinder 703
Seal Kit Flush 68, 69, 170
Seam Grip 1054
SeaStar 697
SeaStar Helm 697
SeaStar Helm Mount 698, 700
SeaStar Helm Plate Kit 698, 700
SeaStar Hydraulic Fluid 329, 683
SeaStar Pro 699
SeaStar Pro Helm 699
SeaStar Pro Hose Kit 700
SeaStar Pro Tilt Helm 699
Seat 1045, 1046
Seat Cushion 1046, 1047
Seat Cushion-Back Rest 1047
Seat w/bracket 1046
Seat Webbing 1051
Seawater Hose Drain Kit 168
Seawater Pickup 183, 184
Seawater Pump Impeller Kit 243
Seawater Pump Kit 159, 160
Seawater Strainer 184
Sender, Analog Power Trim 503
Sender Coolant Temperature 501
Sender Engine Oil Pressure 127, 636, 637
Sender Engine Water Temperature 127, 501, 637
Sender Kit Oil Pressure 482, 486, 490, 494, 502
Sender Kit Temperature 501
Sender Oil Pressure 502, 507
Sender Oil Pressure Engine 127, 636, 637
Sender Oil Pressure Kit 482, 486, 490, 494, 502
Sender Oil Temperature 198
Sender Power Trim 502, 503, 591
Sender Pressure Engine Oil 127, 636, 637
Sender Pressure Oil 502, 507
Sender Pressure Oil Engine 127, 636, 637
Sender Pressure Oil Kit 482, 486, 490, 494, 502
Sensor Connector Kit 580
Sensor Kit Pitot/Speed 593, 594
Sensor Kit Steering 599
Sensor Kit Steering/Speedo 599
Sensor Oil Pressure 502, 591
Sensor Speed/Temperature 592
Sensor Steering/Speedo Kit 599
Sensor Steering Kit 599
Separating Water Fuel Filter . . . 85, 180–183, 238, 240–242
Serpentine Belt 128, 159, 238–243
Serpentine Belt Kit 127, 158, 159
Service Kit, 100 Hour 236, 237
Service Kit, 300 Hour 236, 237
Service Monitor 507
Shaft Alignment 732
Shear Pin 1014
Shear Pin Kit 1013
Shfit Actuator 582
Shift Attaching Kit 47
Shift Cable 218, 219, 556, 557, 725
Shift Cable Bellows 219, 243, 558
Shift Cable Connector 556
Shift Cable Kit 243
Shift Throttle Cable 220, 545–547, 549–553, 556, 716–718, 720–724
Shift Tool Preliminary 732
Shrink Tubing Heat 649
Side Discharge Idle Relief Outlet 212
Side Joiners 1048
Side Mount Control 525
Side Mount Remote Control 525, 527
Silencer Kit 129
Silicone Dielectric 310, 334
Silicone RTV Sealant 332
Silverado 951, 952
Silver Paint 286, 326
Sim Module 573, 574
Sim Module service 568, 569
Sims Module 573
Skeg 93, 1027
Skeg Replacement 93, 94, 185, 1026, 1027
Sleeve Adapter Drive 1003, 1004
Sleeve Assembly Hub 1003
Sleeve Drive 997, 1003
Sleeve Drive Adapter 1003, 1004
Sleeve Hub Assembly 1003

Slim Binacle Control 516
Slip Calculator Prop 1030
SmartCraft Engine Kit 454, 596
SmartCraft Gauge Housing 452
SmartCraft Interface Device 598
SmartCraft J-Box Terminator/Resistor 585, 632
SmartCraft Junction Box 584, 631
SmartCraft Monitor SC1000 System 435
SmartCraft SC1000 System Monitor 435
SmartCraft System Monitor SC1000 435
SmartCraft Terminator/Resistor J-Box 585, 632
SmartCraft Weather Cap 584, 631
Smart Tow Pro Speedo 441
Snorkel Kit 350 Verado 203
Snowmobile Oil, 2S 309
Snubber Strip 1004
Solvent M.E.K. Patching Cleaner 1052
Spacer 1015, 1016
Spacer Air Intake Kit 202
Spacer Drive 206
Spacer Drive Kit 205
Spacer Kit 525, 528
Spacer Kit 524
Spacer Kit, Trim Limit 125, 126
Spacer Kit 2.5 Inch 206
Spacer Kit NXT1 206
Spark Plug 5–11, 120, 230–235, 238–242
Speed/Temperature Sensor 592
Speed Gauge 409
Speedometer
. . . 466, 467, 471, 472, 476, 480, 484, 485, 488, 489, 492
Speedometer, SC 1000 441
Speedometer Flagship 466, 471
Speedometer Harness SC1000 System 585, 601
Speedometer Harness System SC1000 . . . . . 585, 601
Speedometer Kit Pickup 499
Speedometer Link SC100 System
. . . . . 423, 424, 428, 440, 443, 446, 447, 450
Speedometer Pickup 499
Speedometer Pickup Kit 499
Speedometer Pickup Tubing 499, 500
Speedometer QSS 494
Speedometer SC1000 Harness System 585, 601
Speedometer SC1000 System 436, 448
Speedometer SC1000 System Harness 585, 601
Speedometer SC100 System Link
. . . . . 423, 424, 428, 440, 443, 446, 447, 450
Speedometer Tubing Pickup 499, 500
Speedo-Pitot Harness 598
Speed Temp Transducer Insert 593
SPITFIRE 852
Spitfire Pontoon Propeller 850
Spitfire Propeller 849, 850
SPITFIRE X7 852
Splash Plate 208
Splice Clip 649
Sportfish, DTS, Zeus, Quad Zeus, Centerconsole 517
SportJet Impeller 1029, 1030
SST120 Top Cowl 198
Stabilizer 276
Stainless Steel D-Ring 1050
Start/Stop Station Panel 637
Start/Stop Switch Pad 620, 621
Starter Guide Rope 89
Starter Rope Guide 89
Start Kit 38
Start Kit Electric 37, 38
Stator 200
Steering Arm Bracket 709
Steering Arm Extension Kit 708
Steering Assembly Pulley Cable 203
Steering Attaching Kit 704, 705
Steering Attachment Cable 708, 709
Steering Bracket 706, 709
Steering Bracket Arm 709
Steering Bracket Handle 56, 706
Steering Cable 221, 688, 693, 712
Steering Cable Assembly Pulley 203
Steering Cable Attachment 708, 709
Steering Cable Bellows 221, 712
Steering Cable Pulley Assembly 203
Steering Connection Kit Teleflex 697
Steering Fluid Power Trim 288, 329
Steering Handle Bracket 56, 706

Steering Helm 220, 221, 694–696, 711, 712
Steering Kit 658, 659
Steering Kit 657, 658, 705
Steering Kit Dual 658
Steering Kit Extension Arm 708
Steering Kit Tilt 658
Steering Link Rod 704, 705
Steering Sensor Kit 599
Steering System 685–693
Steering Wheel 654, 655
Stern Drive Kit 703
Stop Cap Lanyard Switch 628, 629
Stop Switch, Lanyard 627, 628
Storage Bag Under-Seat 1049
Storage Seal 272, 310
Storage Seal Rust Inhibitor 310
Storage Under-Seat Bag 1049
Switch, Stop 628
Switch Assembly Key 222, 613, 614, 616, 617
Switch Emergency Stop 571
Switch Kit 616
Switch Kit On/Off 515
Switch Kit Power Trim 30, 641, 642
Switch Kit Trim Limit 35, 640–642
Switch MP Alert 509
Synthetic Blend 256, 270, 295

T

Tab Disconnect 649
Tab Trim 100–103, 191, 230–233, 1023
Tab Trim Anode 102, 103, 192, 231, 1023
Tab Washer 1018, 1019
Tach/Speed Helm Kit 410–414, 447, 448
Tachometer 475, 479, 480, 483, 484, 487, 488
Tachometer Flagship 466
Tachometer Harness 635
Tachometer Harness SC1000 System 585, 601
Tachometer Kit 411, 448, 466, 470, 471
Tachometer Link SC100 System 423–425, 428, 440, 441, 446, 447, 450
Tachometer SC1000 System 411, 448
Tachometer SC100 System Link 423–425, 428, 440, 441, 446, 447, 450
Tailpipe 103 Degree 211
Tailpipe Kit Close Couple 210
Tailpipe Kit Driveline 211
Tailstock Assembly 208
Tailstock KIt 173
Tan Camouflage 327
Tank Adapter Replacement 92
TCW3 . . . . . 251, 252
TC-W3 Premium Outboard Oil 252, 291
TDI Axius 576
TDI Axius Harness Kit 568
TDI Drive Extension Harness 569, 570
TDI Engine Assembly Kit 567
TDI Engine Harness 569
TDI Engine Oil 304
TDI Inboard Harness Kit 568
TDI Lift Pump Extension Harness 569
TDI Sterndrive Harness Kit 568
TDI Vessel Sensor Harness 569
Tee Fitting Female 668
Tee Fitting Male 668
Temperature Gauge 485, 493
Temp Sensor 593
Terminal Bullet 648
Terminal Bullet Receptacle 647, 648
Terminal Ring 648–650
Terminator 585, 632
Terminator/Resistor J-Box SmartCraft 585, 632
Theft Deterrent 632
Thermostat 230–235, 238–243
Thermostat Assembly 233
Thermostat Kit 86, 87, 232, 238–241
Threaded Hose Barb 75, 84, 181
Threaded Hose End 74, 75, 84, 181
Threadlocker, Loctite 335
Threadlocker, Medium 336
Threadlocker, Red 336
Thread Locker Loctite 335, 336
Threadlocker Medium 335
Threebond 333

Throttle/Shift Kit Station 557, 724, 725
Throttle Cable Connector 556
Throttle Shift Cable 220, 545–547, 549–553, 556, 716–718, 720–724
Throttle-Shift Cable 553–555
Throttle Shift Kit 49, 656, 657
Thrust Washer 1009, 1016, 1019–1023
Thrust Washer Prop 1022
Thunderbolt 953, 955, 956
Thunderbolt IPS 956
Tie Bar 670–672, 679, 683, 684
Tie Bar Bracket with Bosses 673
Tie Bar Dual Engine 708, 711
Tie Bar Extension 707, 708
Tie Bar Kicker Kit Port 673, 684
Tie Bar Kicker Kit Starboard 673, 684
Tie Bar Kit 674, 703
Tie Bar Kit Liquid 673
Tie Bars-Dual Engines 672, 679, 684, 695
Tie Bar Triple Engine 672, 679, 680, 684
Tie Bar Trolling Motor 674
Tie Strap 653
Tiller Handle Bracket 55
Tiller Handle Conversion Kit 43, 44
Tiller Handle Kit 42–47
Tilt Helm Sea Star brand 697
Tilt Mechanism 679, 683, 694
Tilt Panel 641
Tilt Steering Kit 657, 658
Tilt Support 35
Tilt System 661
Timing Belt 232, 233
Tool Crimping 649
Tool Flameless Heat 650
Tool Halkey-Roberts Universal Valve 1056
Tool Heat Flameless 650
Tool Installation Seal 199
Tool Preliminary Shift 732
Tool Seal Installation 199
Top Cowl SST120 198
Torpedo Bore Cover Assembly NXT1 214
Torrent 954
T Paddle 1059
Trailering Clip 36, 126
Transducer 496, 497
Transducer Insert Housing 592
Transducer Pressure Kit 594
Transmisison Oil Filter 265
Transmission Oil Temp Gauge 416, 419
Transom Assembly 206
Transom Bolt Nuts 66
Transom Discharge Idle Relief Outlet 211, 212
Transom Drill Fixture X-Haust 212
Transom Drilling Fixture 731
Transom Mounted Ignition Keyswitch 39, 40, 619
Transom Plate Assembly Race Common 212
Trim/Tilt kit 504, 640
Trim Cylinder Anode 193
Trim Gauge 438, 444, 449, 483, 487, 494
Trim Gauge, Analog 478
Trim Hose 203
Trim Hose Extension Kit 212
Trim Limit Spacer Kit 125, 126
Trim Limit Switch Kit 35, 640–642
Trim Pad 638
Trim Pad Flush Mount 638
Trim Position Indicator 511, 512, 726, 727
Trim Pump Deck Mount Kit 210, 728
Trim Pump Kit 203
Trim Reducer Kit 35
Trim Sensor Assembly 591
Trim Stick Converter 503
Trim Switch 637
Trim Switch Harness 642
Trim Switch Kit 44
Trim Tab 100–103, 191, 230–233, 1023
Trim Tab Anode 102, 103, 192, 231, 1023
Trim Tab Interface Kit 599
Triple Engine Tie Bar 672, 679, 680, 684
Troll Control 464, 643
Troll Control Kit 49, 643, 657
Trophy Plus Propeller 855
Trophy Sport Propeller 856
T-Tap Connector Self-Stripping 650

T-Tap Self-Stripping Connector 650
Tube Exhaust 172
Tubing Speedometer Pickup 499, 500
Tunnel Sample 224
TVS Harness 613
Two Stroke Oil, Multi-Fuel 253
Two-Stroke Race Oil 269

U

U-Joint Bellows 243
Urethane Adhesive 1054
UTV Oil, 5W40 308

V

Valve Fill Adapter 1056
Valve Halkey-Roberts 1055, 1056
Valve PCV 239–242
Valve Universal Fill Adapter 1056
V-Belt 238
Vengeance 852, 853
Vent Control Ring 1005
Vent Fitting 1028
Vent Plug 1027, 1028
Verado Kicker Kit Electric 647, 672, 674, 685
Verado Kicker Kit Electrical 647, 674
Verado Oil 270, 295
Verado Paint 285, 327
Verado Silver Paint 285, 327
Vessel Integration Panel 573
Vessel Interface Panel 571–575
Vessel Panel 571–574
Vessel Panel Kit 572
Vessel Sensor Extension Harness 570, 580, 581
VesselView 4 408
VesselView 4 Adapter Plate 408
VesselView 4 Kit 406
VesselView 4 Sun Cover 407
VesselView 7 408
VesselView 7 Kit 406
VesselView 7 Sun Cover 407
VesselView 7 Top/Bottom Trim 407
VesselView 7 Video Cable 409
VesselView Adapter Harness 407, 408
VesselView Harness 407, 408
VesseView Adapter Harness 408
VIP Module 574, 575
Voltage Gauge 439, 445, 449
Voltage Regulator/Rectifier Kit 20
Voltage Regulator Kit 20
Volt Meter 467, 468, 472, 476, 481, 485, 489, 493

W

Warning Horn Kit 508
Warning Kit Horn 508
Warning Light Gauge 507, 508
Washer 1017, 1018
Washer Flat 65
Washer Forward Thrust 1020
Washer System Link 1017, 1018
Washer Tab 1018, 1019
Washer Thrust 1009, 1019–1023
Waste Level Gauge 439, 445
Water Eliminator 78, 178, 276, 314
Water Impeller Kit 227, 243
Water Impeller Repair Kit 231, 232
Water Inlet 70
Water Inlet Plug Kit 93
Water Level Gauge 439, 445
Water Pressure Gauge 439, 442, 445, 468, 469, 473, 477, 481, 482, 485, 486, 490, 493
Water Pressure Kit 500
Water Pump 230, 232–235
Water Pump, Complete 234, 235
Water Pump Impeller 230–235
Water Pump Kit 20, 233, 234
Water Pump Kit, Heavy Abrasion 20
Water Pump Kit Repair 230
Water Pump Repair Kit 230
Water Repair Impeller Kit 231
Water Separating Filter 179
Water Separating Filter Kit 81

Water Separating Fuel Filter 81–85, 178–183, 230, 235, 238–243
Water Separating Fuel Filter Kit 81
Water System Anti-Freeze 313
Water Temp 468, 473, 477, 481, 489
Water Temperature Gauge . . . 468, 472, 473, 477, 481, 489
Water Temperature Sender 500, 501
Water Temperature Sender Engine 127, 501, 637
Water Thermostat 230
Weather Cap 584, 585, 631, 632
Weather Cap Network 409
Weather Cap NMEA2K 409
Weather Cap Video 409
Wedge Carburetor Kit 157
Wedge Kit Carburetor 157
White Paint 285
WIF Harness Extension 82
Wiring Harness Actuator 579
Wrench Oil Filter 97, 263, 264, 339, 340
Wrench Prop 1030, 1031
Wrench Retainer 217

X

X-Haust Muffler Kit 211
X-Haust Transom Drill Fixture 212

Y

Yacht Control DTS 517
Yacht Control DTS Shift 517
Y- Harness 510, 643

Z

Zero Effort Control 530–536
Zero Effort Digital Control 517–519
Zero Torque Feedback Rotary Steering System 692
Zeus Helm Board 576
Zeus Propeller 871, 872
Zeus Propeller M-Series 872

Notes: